STB50N25M5

N-channel 250 V, 0.065 Ω, 28 A, MDmesh™ V Power MOSFET in D²PAK package

Datasheet — production data

Features

Type	V_{DSS}	$R_{DS(on)}$ max	I_D
STB50N25M5	250 V	< 0.075 Ω	28 A

- Amongst the best $R_{DS(on)}$* area
- High dv/dt capability
- Excellent switching performance
- Easy to drive
- 100% avalanche tested

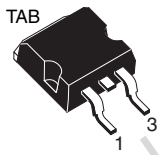

D²PAK

Application

- Switching applications

Description

This device is an N-channel MDmesh™ V Power MOSFET based on an innovative proprietary vertical process technology, which is combined with STMicroelectronics' well-known PowerMESH™ horizontal layout structure. The resulting product has extremely low on-resistance, which is unmatched among silicon-based Power MOSFETs, making it especially suitable for applications which require superior power density and outstanding efficiency.

Figure 1. Internal schematic diagram

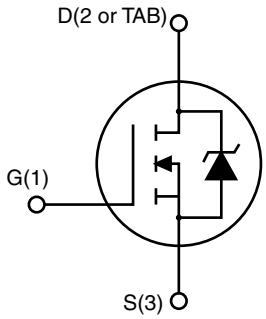

Table 1. Device summary

Order code	Marking	Package	Packaging
STB50N25M5	50N25M5	D²PAK	Tape and reel

Obsolete Product(s) - Obsolete Product(s)

This is information on a product in full production. www.st.com

Contents

1 Electrical ratings 3

2 Electrical characteristics 4

2.1 Electrical characteristics (curves) 6

3 Test circuits 8

4 Package mechanical data 9

5 Packaging mechanical data 11

6 Revision history 13

Obsolete Product(s) - Obsolete Product(s)

1 Electrical ratings

Table 2. Absolute maximum ratings

Symbol	Parameter	Value	Unit
V_{GS}	Gate- source voltage	±25	V
I_D	Drain current (continuous) at T_C = 25 °C	28	A
I_D	Drain current (continuous) at T_C = 100 °C	18	A
I_{DM} (1)	Drain current (pulsed)	112	A
P_{TOT}	Total dissipation at T_C = 25 °C	110	W
I_{AR}	Avalanche current, repetitive or not-repetitive (pulse width limited by T_J max)	9	A
E_{AS}	Single pulse avalanche energy (starting T_J = 25 °C, I_D = I_{AR}, V_{DD} = 50 V)	350	mJ
dv/dt(2)	Peak diode recovery voltage slope	15	V/ns
T_J T_{stg}	Operating junction temperature Storage temperature	-55 to 150	°C

1. Pulse width limited by safe operating area
2. $I_{SD} \leq 28$ A, di/dt ≤ 400 A/µs, $V_{Peak} < V_{(BR)DSS}$

Table 3. Thermal data

Symbol	Parameter	Value	Unit
$R_{thj\text{-}case}$	Thermal resistance junction-case max	0.31	°C/W
$R_{thj\text{-}pcb}$	Thermal resistance junction-pcb max	30	°C/W

Obsolete Product(s) - Obsolete Product(s)

2 Electrical characteristics

(Tcase =25°C unless otherwise specified)

Table 4. On /off states

Symbol	Parameter	Test conditions	Min.	Typ.	Max.	Unit
$V_{(BR)DSS}$	Drain-source breakdown voltage	I_D = 1 mA, V_{GS} = 0	250			V
I_{DSS}	Zero gate voltage drain current (V_{GS} = 0)	V_{DS} = 250 V V_{DS} = 250 V, T_C=125 °C			1 100	µA µA
I_{GSS}	Gate-body leakage current (V_{DS} = 0)	V_{GS} = ± 25 V			±100	nA
$V_{GS(th)}$	Gate threshold voltage	V_{DS} = V_{GS}, I_D = 100 µA	3	4	5	V
$R_{DS(on)}$	Static drain-source on-resistance	V_{GS} = 10 V, I_D = 14 A		0.065	0.075	Ω

Table 5. Dynamic

Symbol	Parameter	Test conditions	Min.	Typ.	Max.	Unit
C_{iss} C_{oss} C_{rss}	Input capacitance Output capacitance Reverse transfer capacitance	V_{DS} = 50 V, f = 1 MHz, V_{GS} = 0	-	1700 100 15	-	pF pF pF
$C_{o(er)}$(1)	Equivalent output capacitance energy related	V_{GS} = 0, V_{DS} = 0 to 80% $V_{(BR)DSS}$	-	89	-	pF
$C_{o(tr)}$(2)	Equivalent output capacitance time related	V_{GS} = 0, V_{DS} = 0 to 80% $V_{(BR)DSS}$	-	171	-	pF
R_g	Gate input resistance	f=1 MHz open drain	-	1.8	-	Ω
Q_g Q_{gs} Q_{gd}	Total gate charge Gate-source charge Gate-drain charge	V_{DD} = 200 V, I_D = 28 A, V_{GS} = 10 V *(see Figure 15)*	-	44 10 23	-	nC nC nC

1. $C_{o(er)}$ is a constant capacitance value that gives the same stored energy as C_{oss} while V_{DS} is rising from 0 to 80% V_{DSS}
2. $C_{o(tr)}$ is a constant capacitance value that gives the same charging time as C_{oss} while V_{DS} is rising from 0 to 80% V_{DSS}

Obsolete Product(s) - Obsolete Product(s)

Table 6. Switching times

Symbol	Parameter	Test conditions	Min.	Typ.	Max	Unit
$t_{d(on)}$ t_r $t_{d(off)}$ t_f	Turn-on delay time Rise time Turn-off-delay time Fall time	V_{DD} = 125 V, I_D = 14 A, R_G = 4.7 Ω, V_{GS} = 10 V *(see Figure 14)*	-	16 44 35 20	-	ns ns ns ns

Table 7. Source drain diode

Symbol	Parameter	Test conditions	Min.	Typ.	Max	Unit
I_{SD} I_{SDM} (1)	Source-drain current Source-drain current (pulsed)		-		28 112	A A
V_{SD} (2)	Forward on voltage	I_{SD} = 28 A, V_{GS} = 0	-		1.6	V
t_{rr} Q_{rr} I_{RRM}	Reverse recovery time Reverse recovery charge Reverse recovery current	I_{SD} = 28 A, di/dt = 100 A/µs V_{DD}= 60 V, T_J = 25 °C *(see Figure 16)*	-	174 1.5 18		ns µC A
t_{rr} Q_{rr} I_{RRM}	Reverse recovery time Reverse recovery charge Reverse recovery current	I_{SD} = 28 A, di/dt = 100 A/µs V_{DD}= 60 V T_J = 150 °C *(see Figure 16)*	-	195 2 20		ns µC A

1. Pulse width limited by safe operating area
2. Pulsed: pulse duration = 300 µs, duty cycle 1.5%

Obsolete Product(s) - Obsolete Product(s)

2.1 Electrical characteristics (curves)

Figure 2. Safe operating area

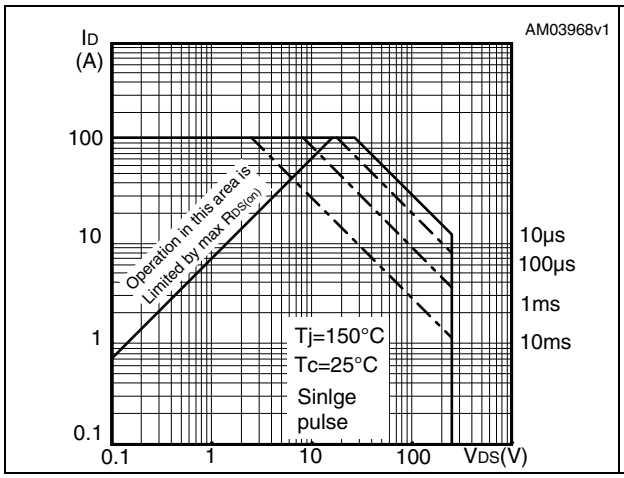

Figure 3. Thermal impedance

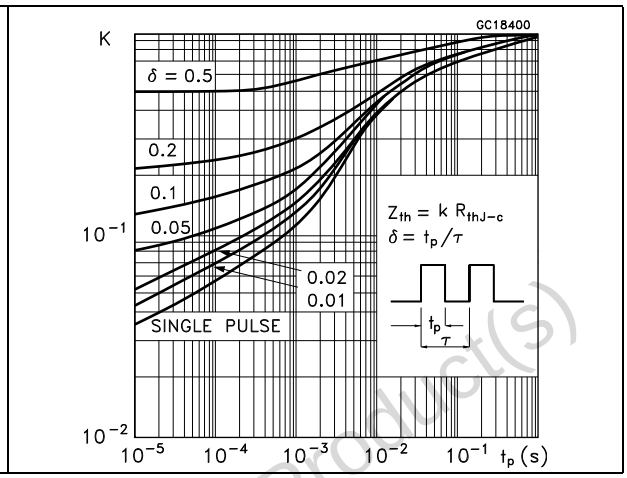

Figure 4. Output characteristics

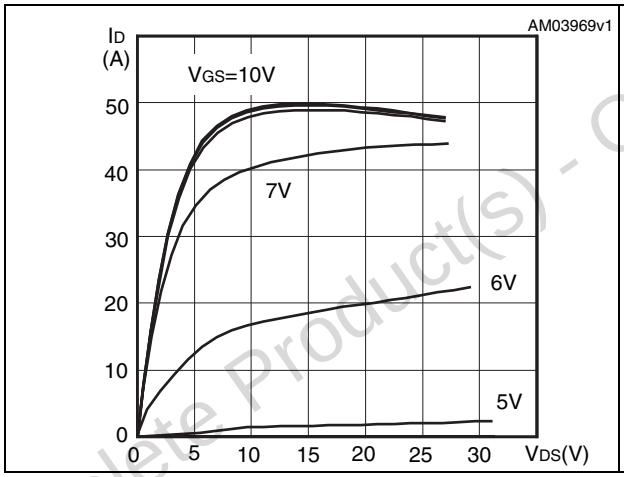

Figure 5. Transfer characteristics

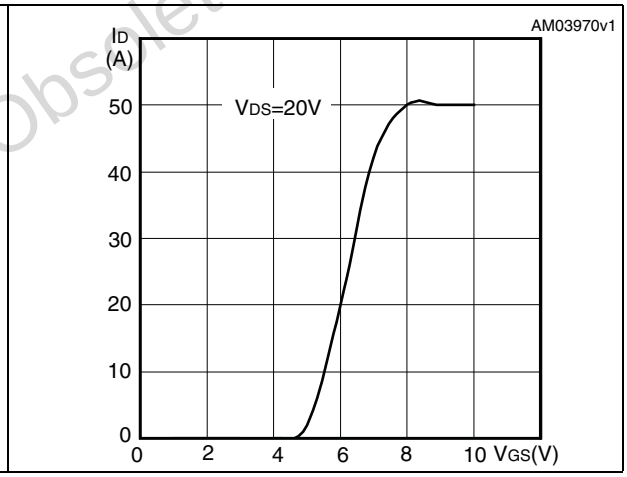

Figure 6. Normalized BV_{DSS} vs temperature

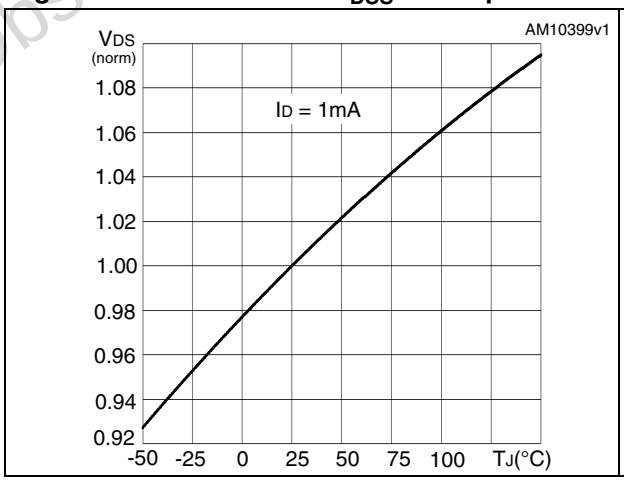

Figure 7. Static drain-source on-resistance

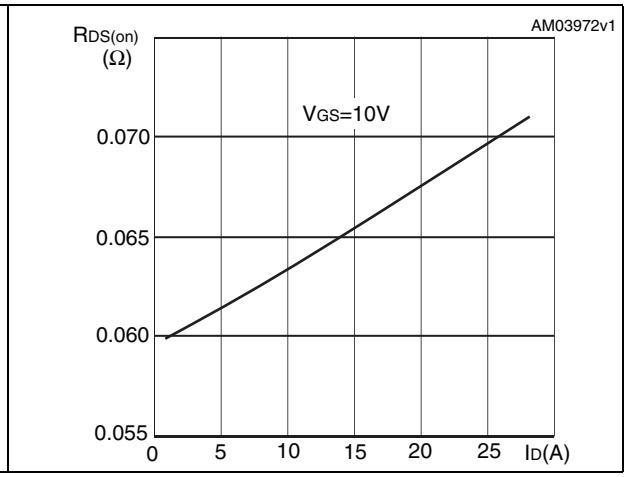

Obsolete Product(s) - Obsolete Product(s)

Figure 8. Output capacitance stored energy

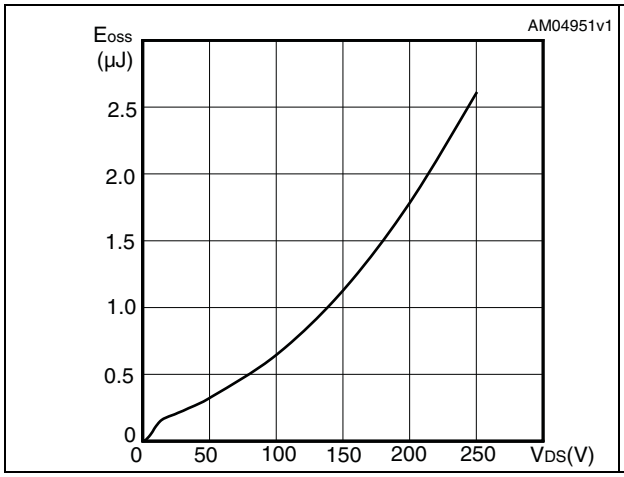

Figure 9. Capacitance variations

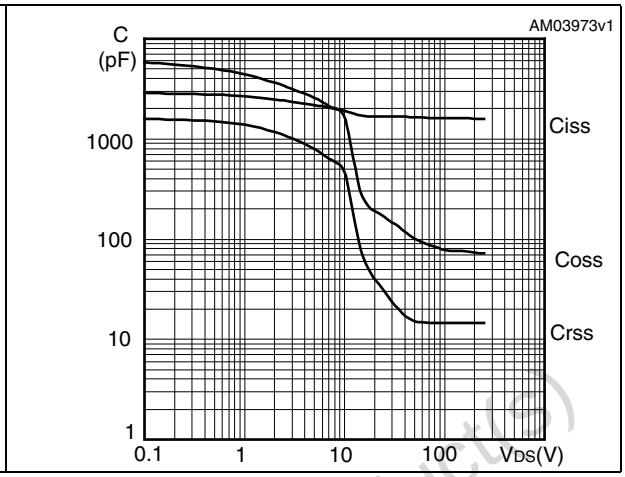

Figure 10. Gate charge vs gate-source voltage

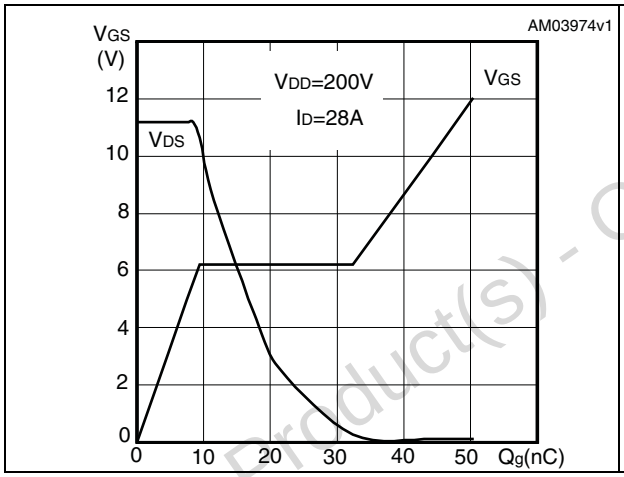

Figure 11. Normalized on-resistance vs temperature

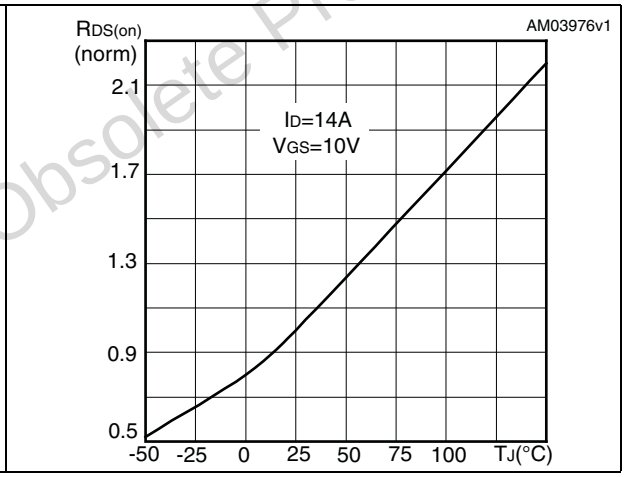

Figure 12. Normalized gate threshold voltage vs temperature

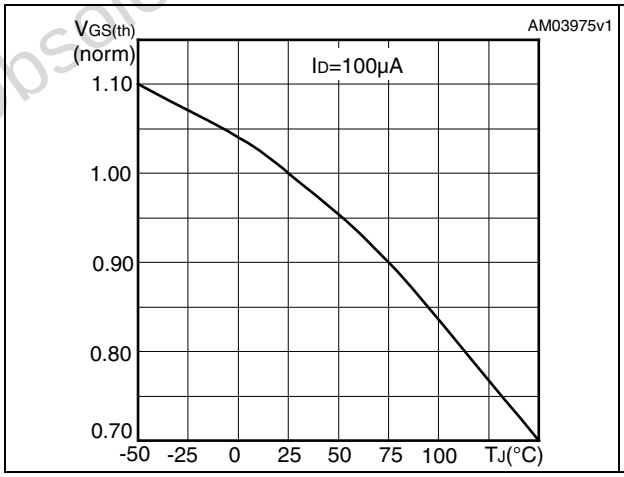

Figure 13. Source-drain diode forward characteristics

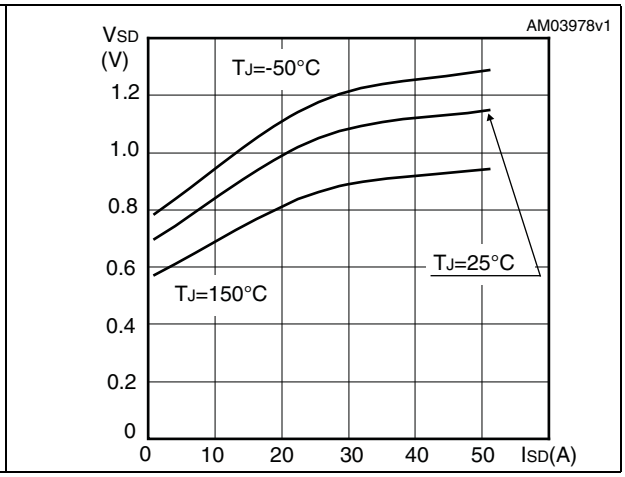

Obsolete Product(s) - Obsolete Product(s)

3 Test circuits

Figure 14. Switching times test circuit for resistive load

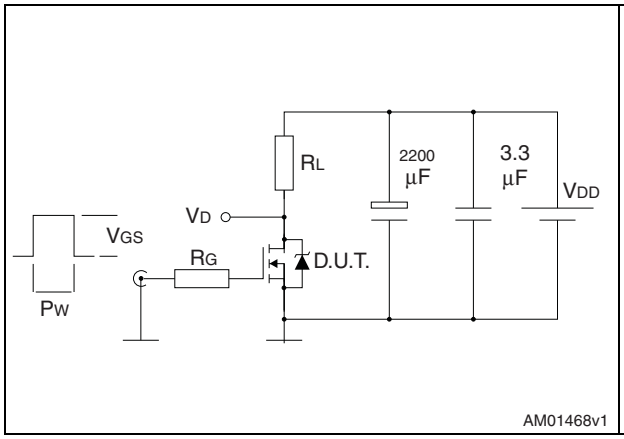

Figure 15. Gate charge test circuit

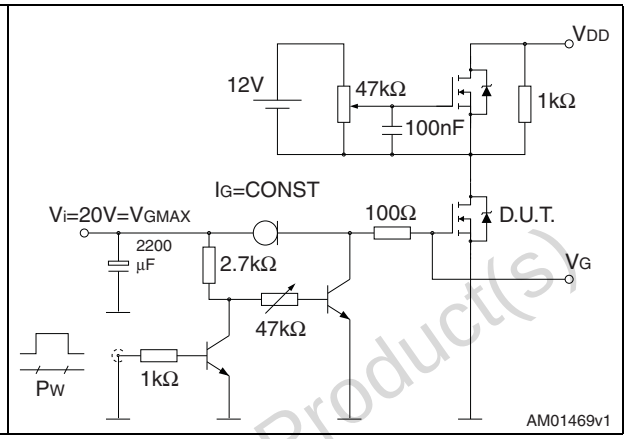

Figure 16. Test circuit for inductive load switching and diode recovery times

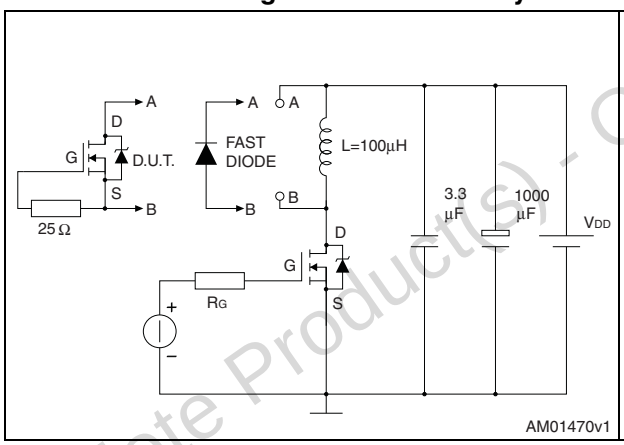

Figure 17. Unclamped inductive load test circuit

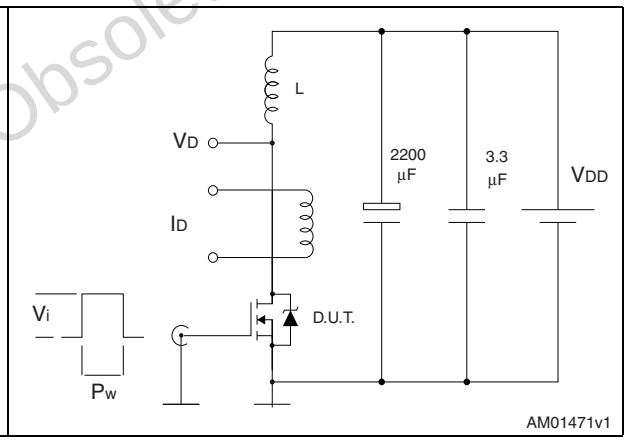

Figure 18. Unclamped inductive waveform

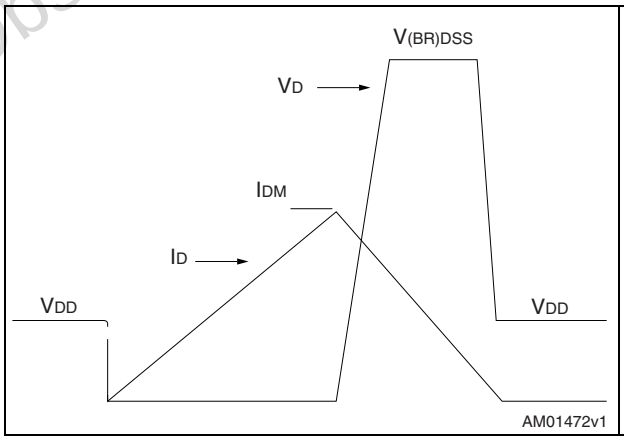

Figure 19. Switching time waveform

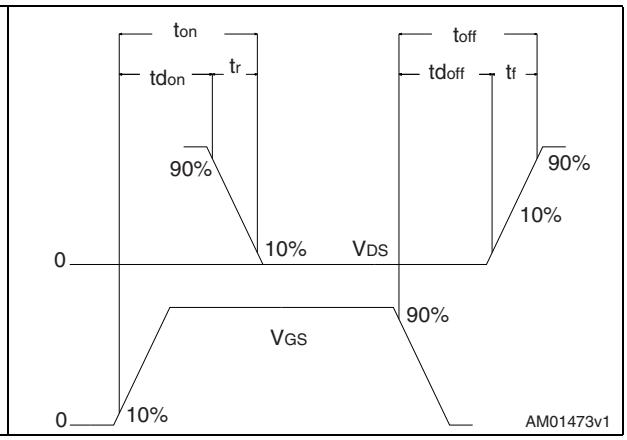

Obsolete Product(s) - Obsolete Product(s)

4 Package mechanical data

In order to meet environmental requirements, ST offers these devices in different grades of ECOPACK® packages, depending on their level of environmental compliance. ECOPACK® specifications, grade definitions and product status are available at: www.st.com. ECOPACK is an ST trademark.

Table 8. D²PAK (TO-263) mechanical data

Dim.	mm		
	Min.	Typ.	Max.
A	4.40		4.60
A1	0.03		0.23
b	0.70		0.93
b2	1.14		1.70
c	0.45		0.60
c2	1.23		1.36
D	8.95		9.35
D1	7.50		
E	10		10.40
E1	8.50		
e		2.54	
e1	4.88		5.28
H	15		15.85
J1	2.49		2.69
L	2.29		2.79
L1	1.27		1.40
L2	1.30		1.75
R		0.4	
V2	0°		8°

Obsolete Product(s) - Obsolete Product(s)

Figure 20. D²PAK (TO-263) drawing

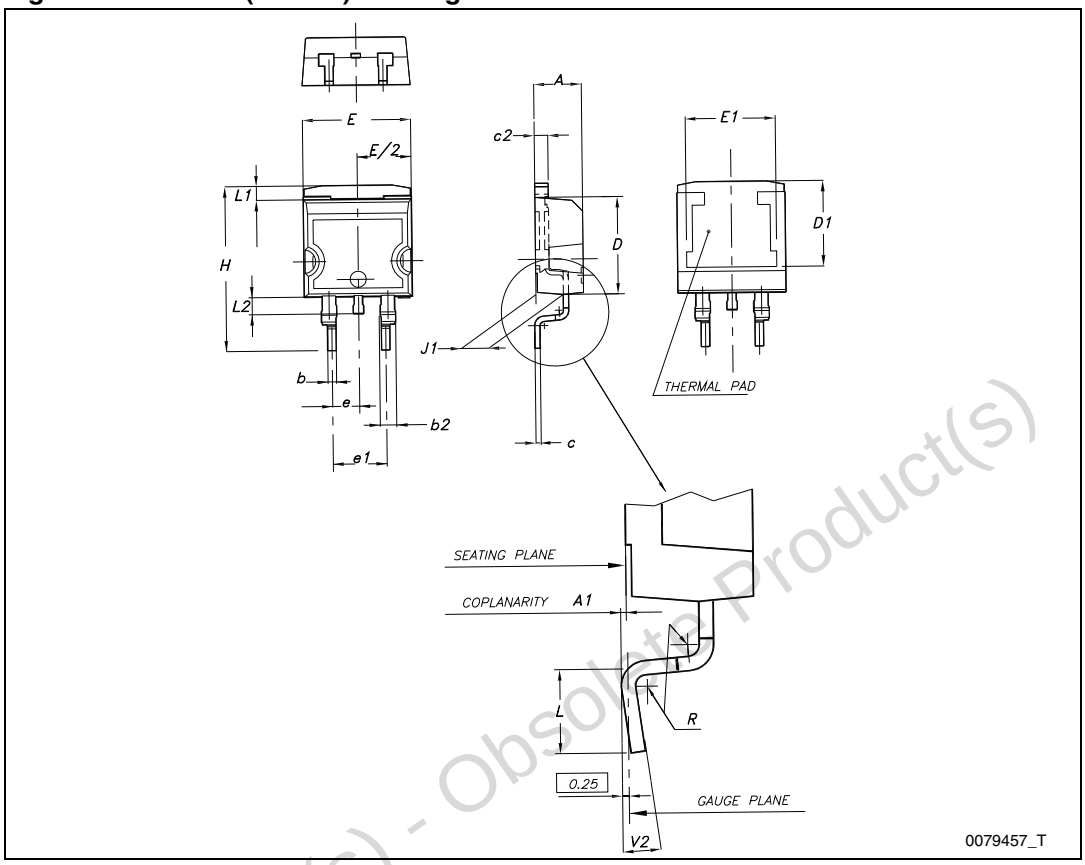

Figure 21. D²PAK footprint[a]

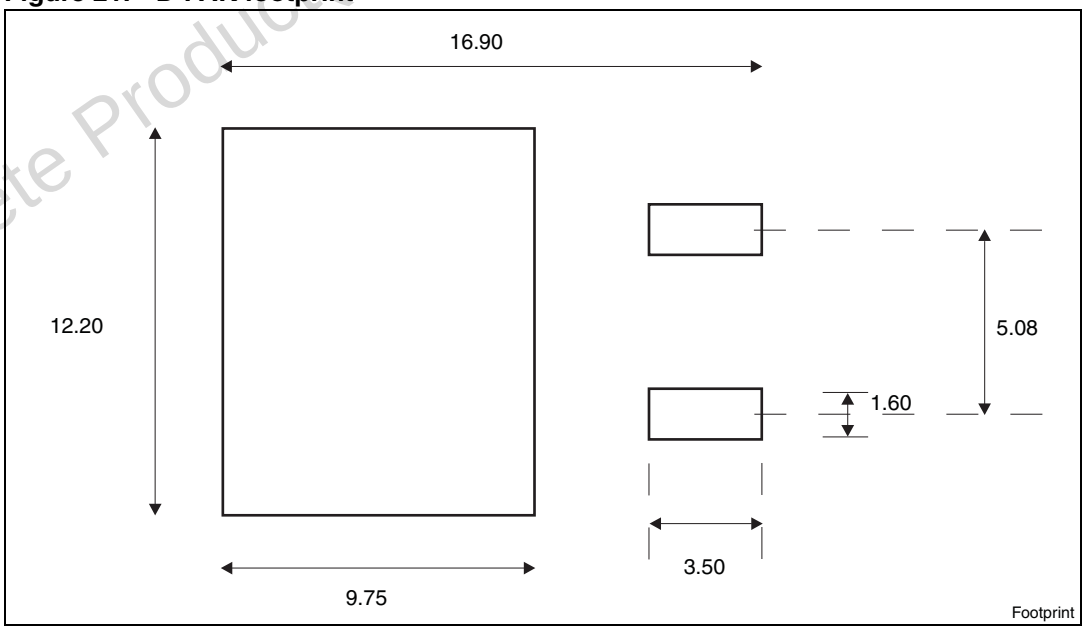

a. All dimensions are in millimeters

Obsolete Product(s) - Obsolete Product(s)

5 Packaging mechanical data

Table 9. D²PAK (TO-263) tape and reel mechanical data

Tape			Reel		
Dim.	mm		Dim.	mm	
	Min.	Max.		Min.	Max.
A0	10.5	10.7	A		330
B0	15.7	15.9	B	1.5	
D	1.5	1.6	C	12.8	13.2
D1	1.59	1.61	D	20.2	
E	1.65	1.85	G	24.4	26.4
F	11.4	11.6	N	100	
K0	4.8	5.0	T		30.4
P0	3.9	4.1			
P1	11.9	12.1	Base qty		1000
P2	1.9	2.1	Bulk qty		1000
R	50				
T	0.25	0.35			
W	23.7	24.3			

Obsolete Product(s) - Obsolete Product(s)

Figure 22. Tape for D²PAK (TO-263)

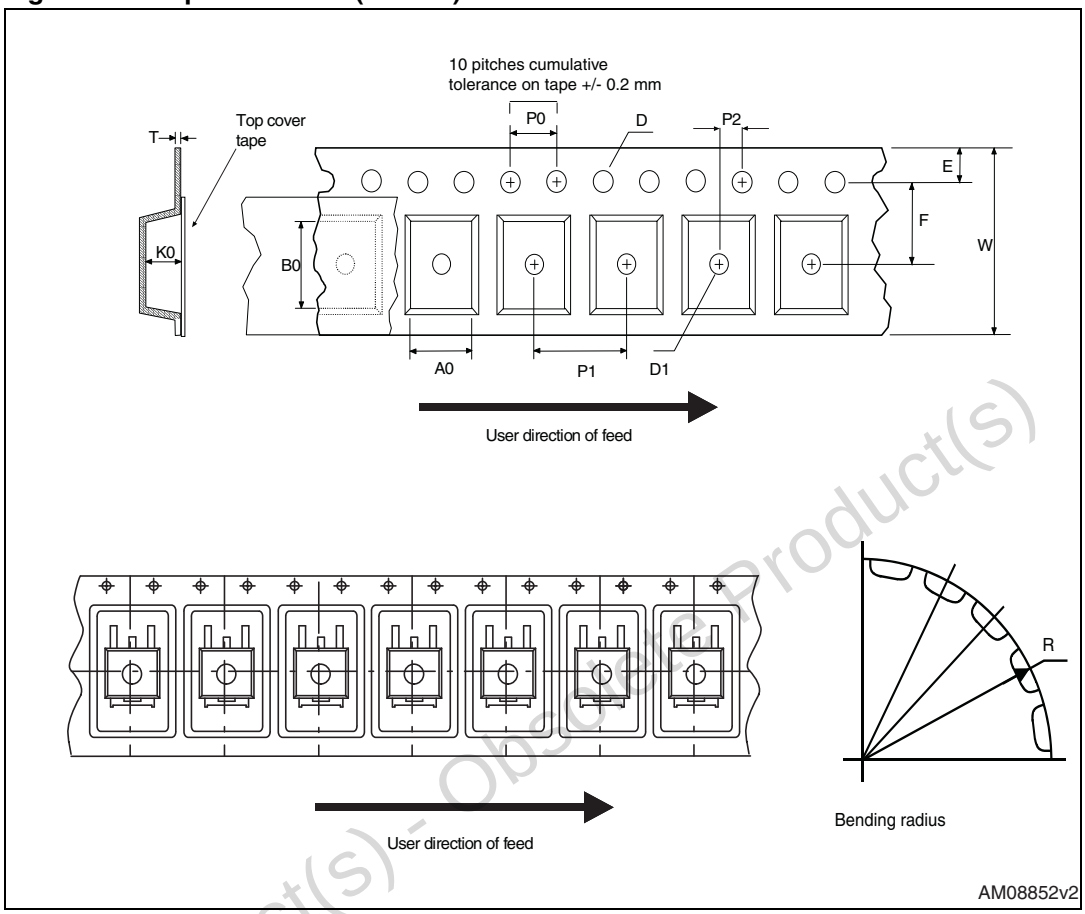

Figure 23. Reel for D²PAK (TO-263)

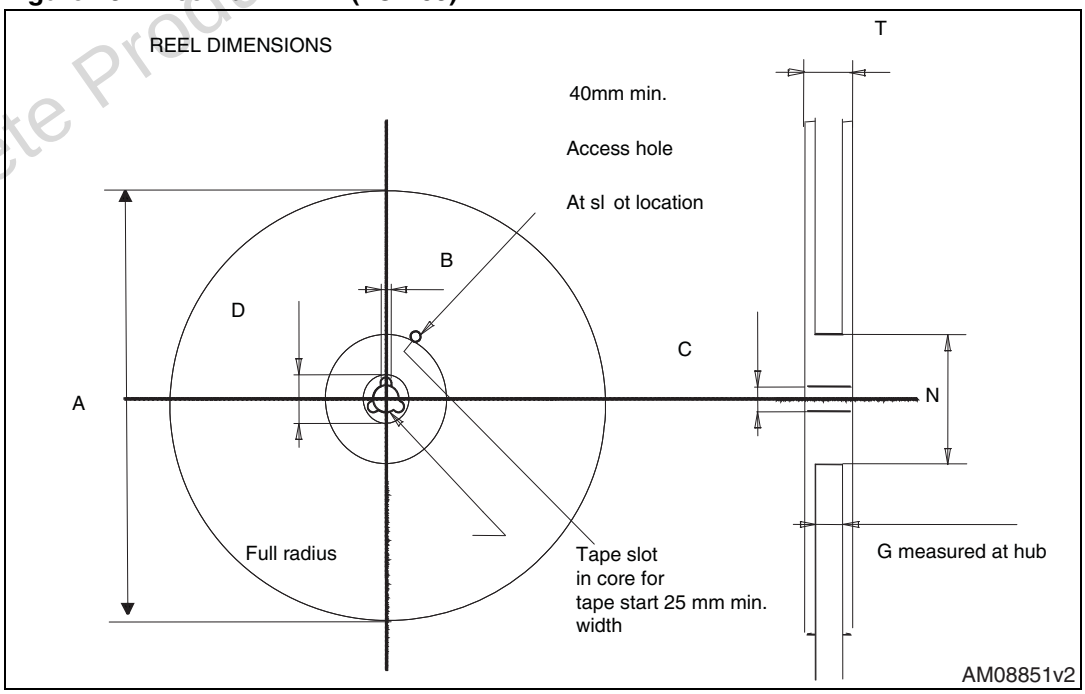

Obsolete Product(s) - Obsolete Product(s)

6 Revision history

Table 10. Document revision history

Date	Revision	Changes
23-Jun-2009	1	First release
15-Mar-2012	2	*Section 4: Package mechanical data* has been updated. Minor text changes.
28-Mar-2012	3	*Figure 7: Static drain-source on-resistance* has been updated.

Obsolete Product(s) - Obsolete Product(s)

Obsolete Product(s) - Obsolete Product(s)

Please Read Carefully:

Information in this document is provided solely in connection with ST products. STMicroelectronics NV and its subsidiaries (“ST”) reserve the right to make changes, corrections, modifications or improvements, to this document, and the products and services described herein at any time, without notice.

All ST products are sold pursuant to ST’s terms and conditions of sale.

Purchasers are solely responsible for the choice, selection and use of the ST products and services described herein, and ST assumes no liability whatsoever relating to the choice, selection or use of the ST products and services described herein.

No license, express or implied, by estoppel or otherwise, to any intellectual property rights is granted under this document. If any part of this document refers to any third party products or services it shall not be deemed a license grant by ST for the use of such third party products or services, or any intellectual property contained therein or considered as a warranty covering the use in any manner whatsoever of such third party products or services or any intellectual property contained therein.

UNLESS OTHERWISE SET FORTH IN ST’S TERMS AND CONDITIONS OF SALE ST DISCLAIMS ANY EXPRESS OR IMPLIED WARRANTY WITH RESPECT TO THE USE AND/OR SALE OF ST PRODUCTS INCLUDING WITHOUT LIMITATION IMPLIED WARRANTIES OF MERCHANTABILITY, FITNESS FOR A PARTICULAR PURPOSE (AND THEIR EQUIVALENTS UNDER THE LAWS OF ANY JURISDICTION), OR INFRINGEMENT OF ANY PATENT, COPYRIGHT OR OTHER INTELLECTUAL PROPERTY RIGHT.

UNLESS EXPRESSLY APPROVED IN WRITING BY TWO AUTHORIZED ST REPRESENTATIVES, ST PRODUCTS ARE NOT RECOMMENDED, AUTHORIZED OR WARRANTED FOR USE IN MILITARY, AIR CRAFT, SPACE, LIFE SAVING, OR LIFE SUSTAINING APPLICATIONS, NOR IN PRODUCTS OR SYSTEMS WHERE FAILURE OR MALFUNCTION MAY RESULT IN PERSONAL INJURY, DEATH, OR SEVERE PROPERTY OR ENVIRONMENTAL DAMAGE. ST PRODUCTS WHICH ARE NOT SPECIFIED AS "AUTOMOTIVE GRADE" MAY ONLY BE USED IN AUTOMOTIVE APPLICATIONS AT USER’S OWN RISK.

Resale of ST products with provisions different from the statements and/or technical features set forth in this document shall immediately void any warranty granted by ST for the ST product or service described herein and shall not create or extend in any manner whatsoever, any liability of ST.

ST and the ST logo are trademarks or registered trademarks of ST in various countries.

Information in this document supersedes and replaces all information previously supplied.

The ST logo is a registered trademark of STMicroelectronics. All other names are the property of their respective owners.

© 2012 STMicroelectronics - All rights reserved

STMicroelectronics group of companies

Australia - Belgium - Brazil - Canada - China - Czech Republic - Finland - France - Germany - Hong Kong - India - Israel - Italy - Japan - Malaysia - Malta - Morocco - Philippines - Singapore - Spain - Sweden - Switzerland - United Kingdom - United States of America

www.st.com