STD30NF06L

N-CHANNEL 60V - 0.022Ω - 35A DPAK/IPAK
STripFET™ POWER MOSFET

TYPE	V_{DSS}	$R_{DS(on)}$	I_D
STD30NF06L	60 V	<0.028Ω	35 A

- TYPICAL $R_{DS}(on)$ = 0.022Ω
- EXCEPTIONAL dv/dt CAPABILITY
- LOGIC LEVEL GATE DRIVE
- ADD SUFFIX "T4" FOR ORDERING IN TAPE & REEL
- ADD SUFFIX "-1" FOR ORDERING IN IPAK
- CHARACTERIZATION ORIENTED FOR AUTOMOTIVE APPLICATIONS

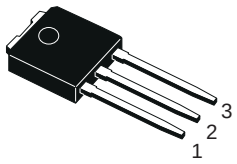

IPAK

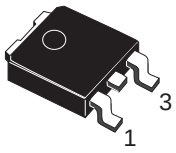

DPAK

DESCRIPTION

This Power Mosfet is the latest development of STMicroelectronics unique "Single Feature Size™" strip-based process. The resulting transistor shows extremely high packing density for low on-resistance, rugged avalance characteristics and less critical alignment steps therefore a remarkable manufacturing reproducibility.

INTERNAL SCHEMATIC DIAGRAM

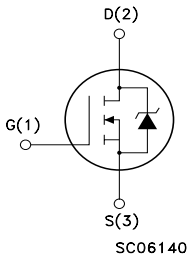

APPLICATIONS

- HIGH-EFFICIENCY DC-DC CONVERTERS
- MOTOR CONTROL, AUDIO AMPLIFIERS
- DC-DC & DC-AC CONVERTERS
- AUTOMOTIVE

ABSOLUTE MAXIMUM RATINGS

Symbol	Parameter	Value	Unit
V_{DS}	Drain-source Voltage (V_{GS} = 0)	60	V
V_{DGR}	Drain-gate Voltage (R_{GS} = 20 kΩ)	60	V
V_{GS}	Gate- source Voltage	± 20	V
I_D	Drain Current (continuous) at T_C = 25°C	35	A
I_D	Drain Current (continuous) at T_C = 100°C	25	A
I_{DM} (●)	Drain Current (pulsed)	140	A
P_{TOT}	Total Dissipation at T_C = 25°C	70	W
	Derating Factor	0.46	W/°C
dv/dt (1)	Peak Diode Recovery voltage slope	25	V/ns
T_{stg}	Storage Temperature	– 55 to 175	°C
T_j	Operating Junction Temperature		

(●) Pulse width limited by safe operating area

(1) I_{SD} ≤38A, di/dt ≤400A/µs, V_{DD} ≤ $V_{(BR)DSS}$, T_j ≤ $T_{JMAX.}$

THERMAL DATA

Rthj-case	Thermal Resistance Junction-case Max	2.14	°C/W
Rthj-amb	Thermal Resistance Junction-ambient Max	100	°C/W
T_l	Maximum Lead Temperature For Soldering Purpose	275	°C

AVALANCHE CHARACTERISTICS

Symbol	Parameter	Max Value	Unit
I_{AR}	Avalanche Current, Repetitive or Not-Repetitive (pulse width limited by T_j max)	35	A
E_{AS}	Single Pulse Avalanche Energy (starting T_j = 25 °C, I_D = I_{AR}, V_{DD} = 50 V)	150	mJ

ELECTRICAL CHARACTERISTICS (TCASE = 25 °C UNLESS OTHERWISE SPECIFIED)

OFF

Symbol	Parameter	Test Conditions	Min.	Typ.	Max.	Unit
$V_{(BR)DSS}$	Drain-source Breakdown Voltage	I_D = 250 µA, V_{GS} = 0	60			V
I_{DSS}	Zero Gate Voltage Drain Current (V_{GS} = 0)	V_{DS} = Max Rating			1	µA
		V_{DS} = Max Rating, T_C = 125 °C			10	µA
I_{GSS}	Gate-body Leakage Current (V_{DS} = 0)	V_{GS} = ± 20 V			±100	nA

ON (1)

Symbol	Parameter	Test Conditions	Min.	Typ.	Max.	Unit
$V_{GS(th)}$	Gate Threshold Voltage	V_{DS} = V_{GS}, I_D = 250 µA	1	1.7	2.5	V
$R_{DS(on)}$	Static Drain-source On Resistance	V_{GS} = 5 V, I_D = 18 A		0.025	0.03	Ω
		V_{GS} = 10 V, I_D = 18 A		0.022	0.028	Ω

DYNAMIC

Symbol	Parameter	Test Conditions	Min.	Typ.	Max.	Unit
g_{fs} (1)	Forward Transconductance	V_{DS} > =15 V , I_D =15 A		25		S
C_{iss}	Input Capacitance	V_{DS} = 25 V, f = 1 MHz, V_{GS} = 0		1600		pF
C_{oss}	Output Capacitance			215		pF
C_{rss}	Reverse Transfer Capacitance			60		pF

ELECTRICAL CHARACTERISTICS (CONTINUED)

SWITCHING ON

Symbol	Parameter	Test Conditions	Min.	Typ.	Max.	Unit
$t_{d(on)}$	Turn-on Delay Time	V_{DD} = 30 V, I_D = 18 A		30		ns
t_r	Rise Time	R_G = 4.7Ω V_{GS} = 4.5 V (see test circuit, Figure 3)		105		ns
Q_g	Total Gate Charge	V_{DD} = 48 V, I_D = 38 A,		23	31	nC
Q_{gs}	Gate-Source Charge	V_{GS} = 5 V		7		nC
Q_{gd}	Gate-Drain Charge			10		nC

SWITCHING OFF

Symbol	Parameter	Test Conditions	Min.	Typ.	Max.	Unit
$t_{d(off)}$	Turn-off-Delay Time	V_{DD} = 30 V, I_D = 18 A,		65		ns
t_f	Fall Time	R_G = 4.7Ω, V_{GS} = 4.5 V (see test circuit, Figure 3)		25		ns

SOURCE DRAIN DIODE

Symbol	Parameter	Test Conditions	Min.	Typ.	Max.	Unit
I_{SD}	Source-drain Current				35	A
I_{SDM} (2)	Source-drain Current (pulsed)				140	A
V_{SD} (1)	Forward On Voltage	I_{SD} = 35 A, V_{GS} = 0			1.5	V
t_{rr}	Reverse Recovery Time	I_{SD} = 38 A, di/dt = 100 A/µs,		70		ns
Q_{rr}	Reverse Recovery Charge	V_{DD} = 15 V, T_j = 150°C		140		nC
I_{RRM}	Reverse Recovery Current	(see test circuit, Figure 5)		4		A

Note: 1. Pulsed: Pulse duration = 300 µs, duty cycle 1.5 %.
2. Pulse width limited by safe operating area.

Safe Operating Area

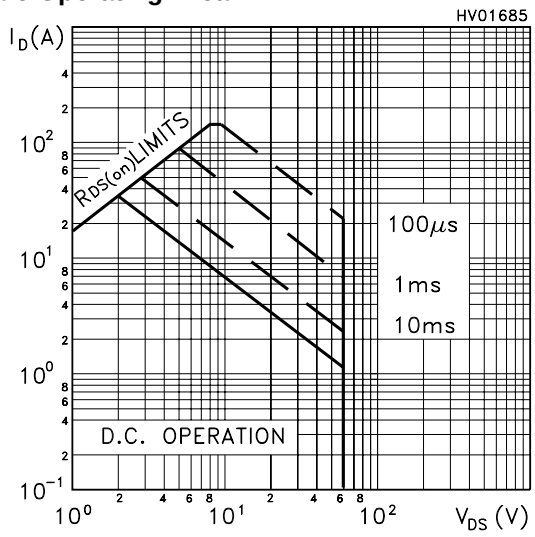

Normalized Thermal Impedence

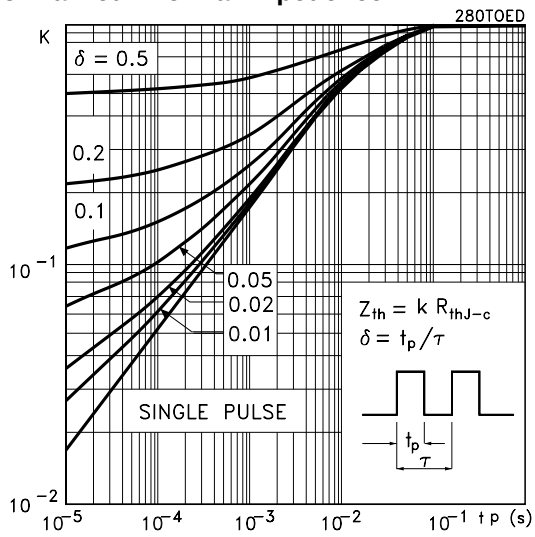

Output Characteristics

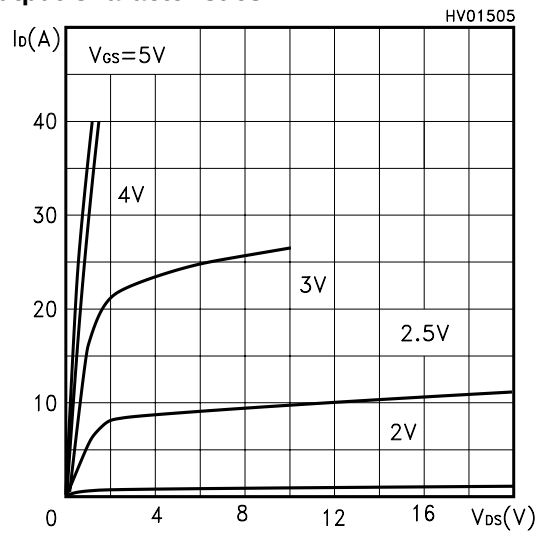

Transfer Characteristics

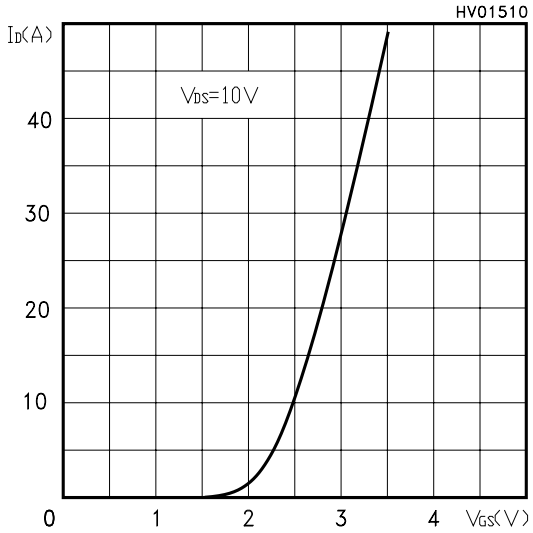

Transconductance

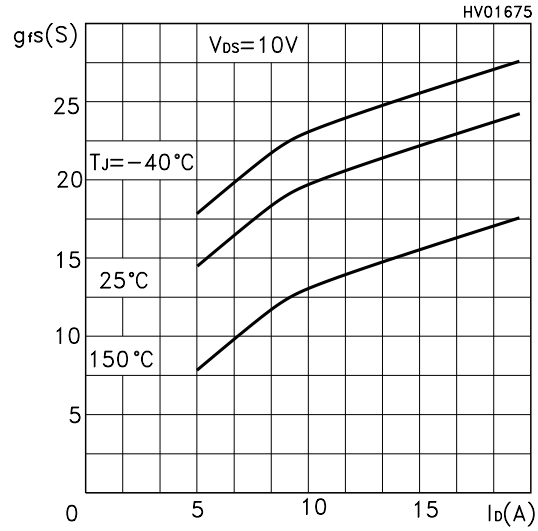

Static Drain-source On Resistance

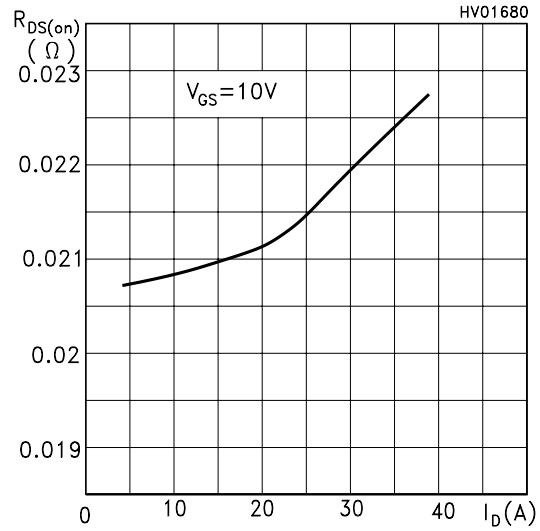

Gate Charge vs Gate-source Voltage

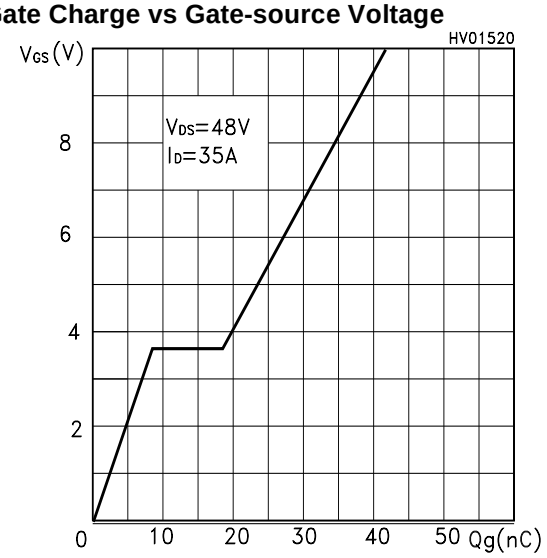

Capacitance Variations

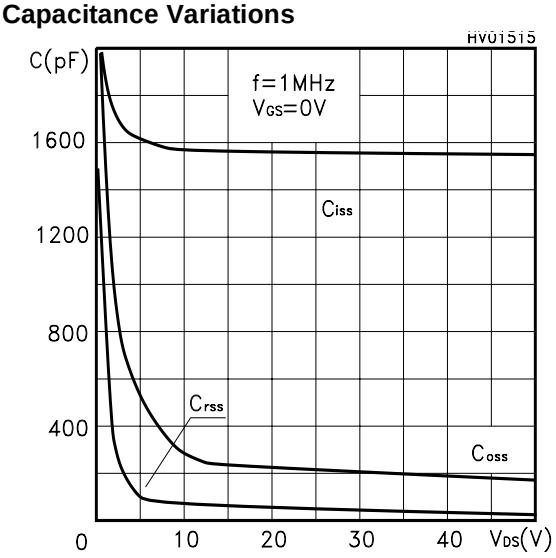

Normalized Gate Threshold Voltage vs Temperature

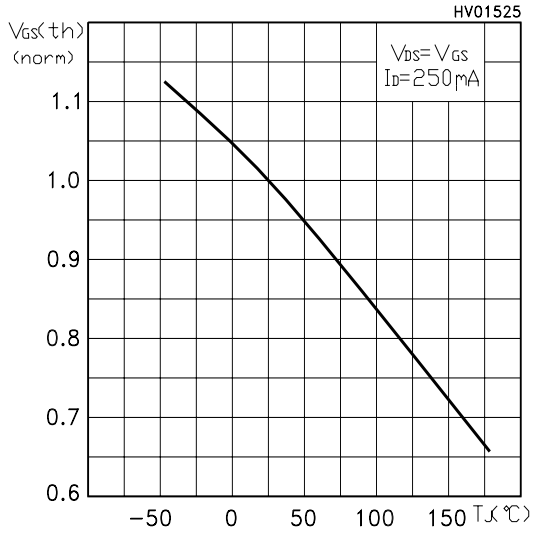

Normalized On Resistance vs Temperature

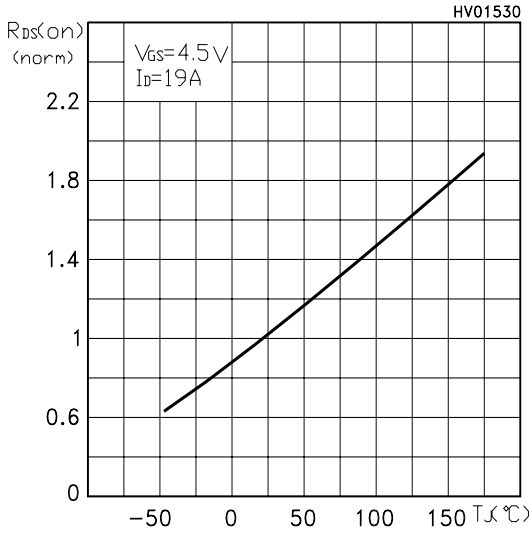

Normalized Drain-Source Breakdown vs Temperature

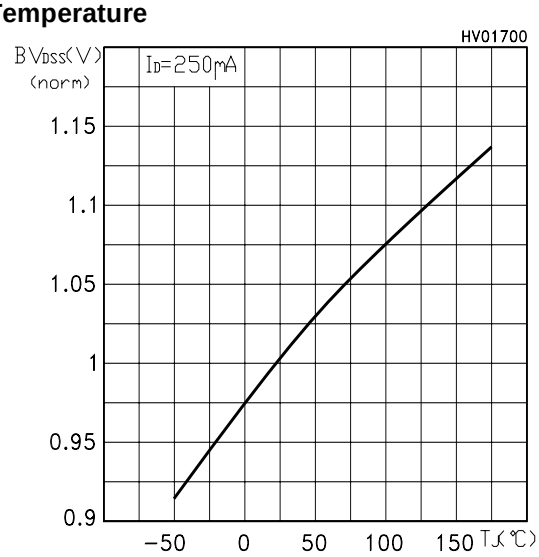

Source-drain Diode Forward Characteristics

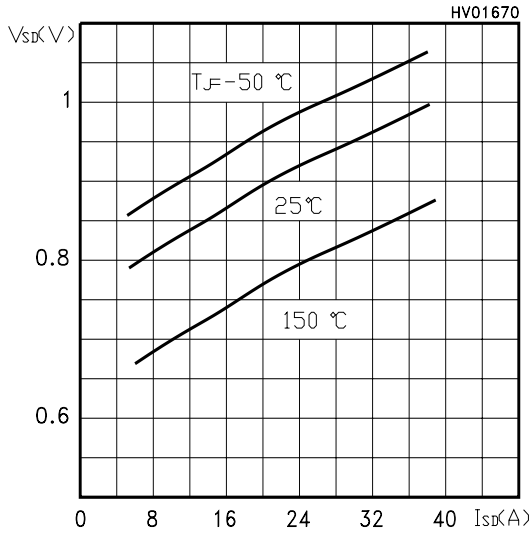

Fig. 1: Unclamped Inductive Load Test Circuit

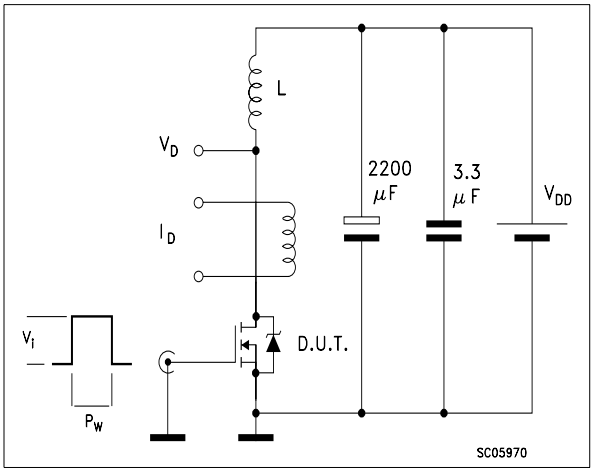

Fig. 2: Unclamped Inductive Waveform

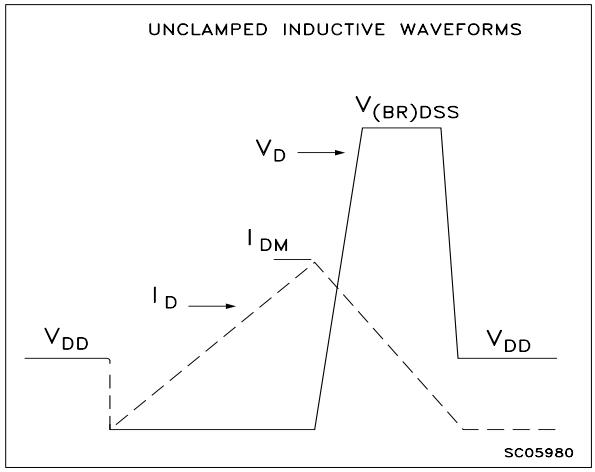

Fig. 3: Switching Times Test Circuit For Resistive Load

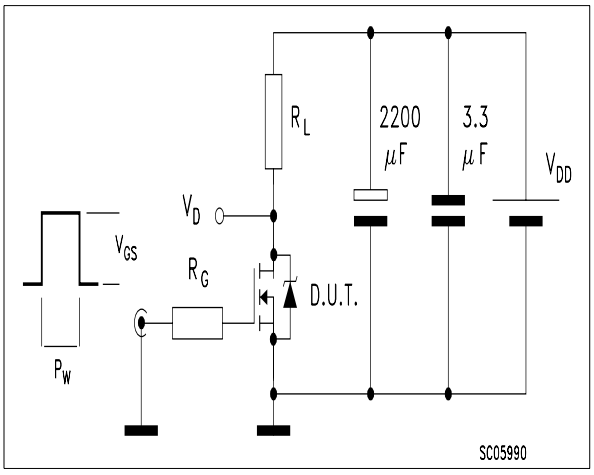

Fig. 4: Gate Charge test Circuit

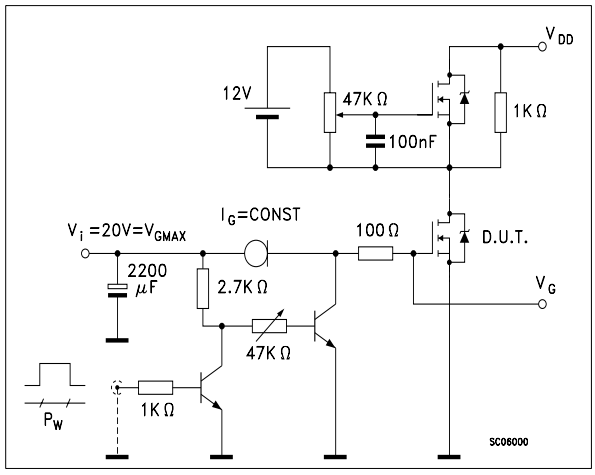

Fig. 5: Test Circuit For Inductive Load Switching And Diode Recovery Times

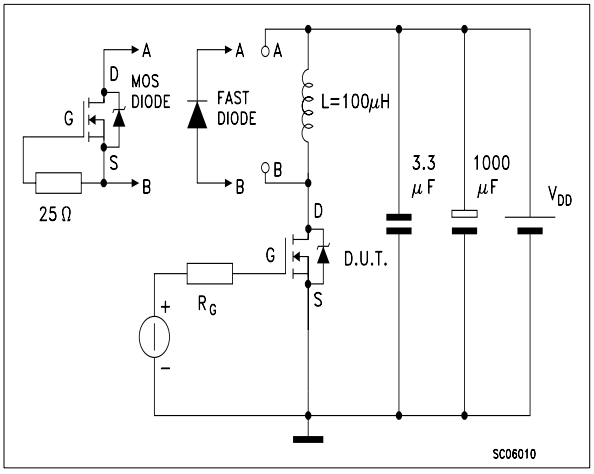

TO-251 (IPAK) MECHANICAL DATA

DIM.	mm			inch		
	MIN.	TYP.	MAX.	MIN.	TYP.	MAX.
A	2.2		2.4	0.086		0.094
A1	0.9		1.1	0.035		0.043
A3	0.7		1.3	0.027		0.051
B	0.64		0.9	0.025		0.031
B2	5.2		5.4	0.204		0.212
B3			0.85			0.033
B5		0.3			0.012	
B6			0.95			0.037
C	0.45		0.6	0.017		0.023
C2	0.48		0.6	0.019		0.023
D	6		6.2	0.236		0.244
E	6.4		6.6	0.252		0.260
G	4.4		4.6	0.173		0.181
H	15.9		16.3	0.626		0.641
L	9		9.4	0.354		0.370
L1	0.8		1.2	0.031		0.047
L2		0.8	1		0.031	0.039

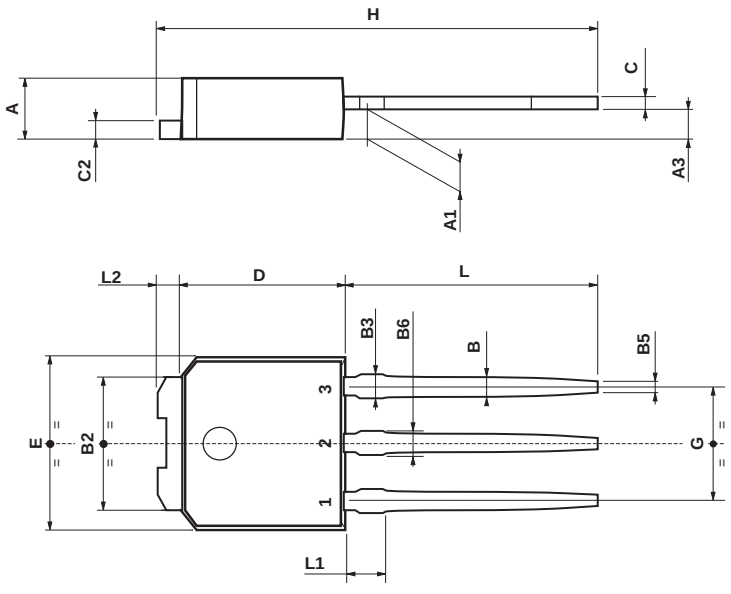

0068771-E

TO-252 (DPAK) MECHANICAL DATA

DIM.	mm			inch		
	MIN.	TYP.	MAX.	MIN.	TYP.	MAX.
A	2.20		2.40	0.087		0.094
A1	0.90		1.10	0.035		0.043
A2	0.03		0.23	0.001		0.009
B	0.64		0.90	0.025		0.035
B2	5.20		5.40	0.204		0.213
C	0.45		0.60	0.018		0.024
C2	0.48		0.60	0.019		0.024
D	6.00		6.20	0.236		0.244
E	6.40		6.60	0.252		0.260
G	4.40		4.60	0.173		0.181
H	9.35		10.10	0.368		0.398
L2		0.8			0.031	
L4	0.60		1.00	0.024		0.039
V2	0°		8°	0°		0°

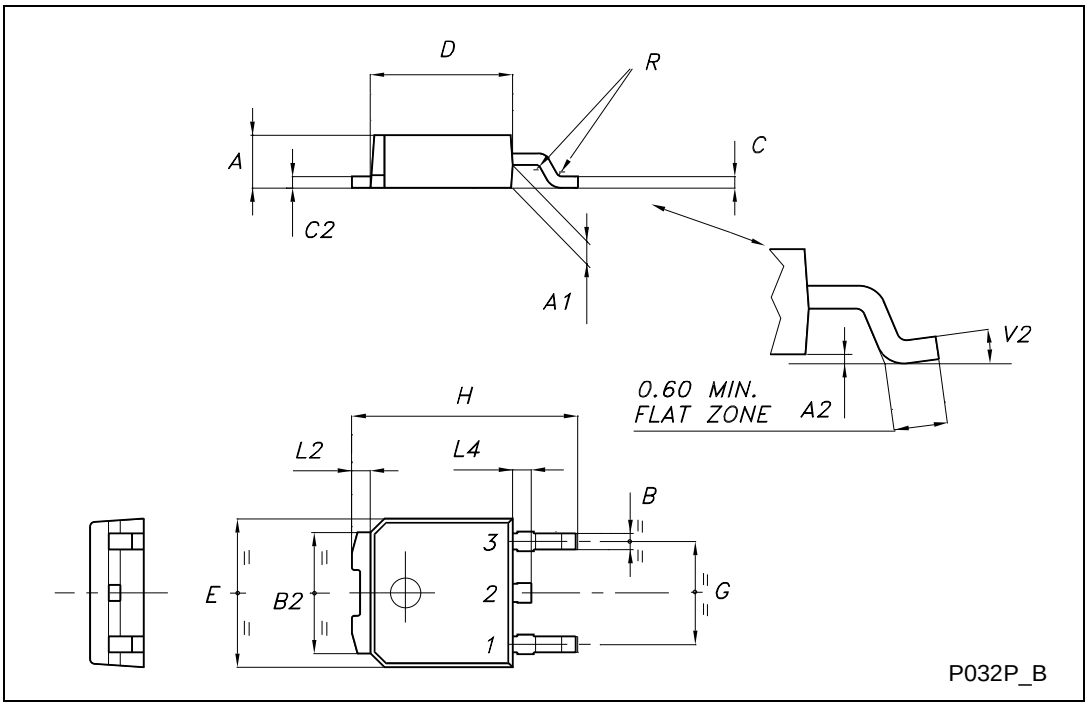

DPAK FOOTPRINT

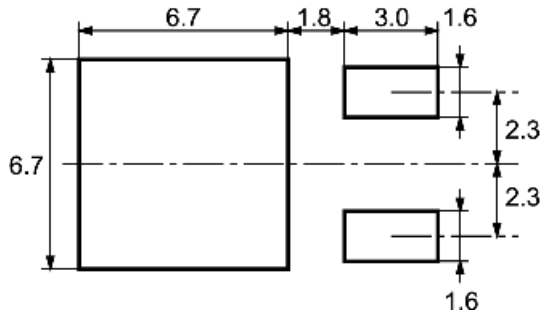

All dimensions are in millimeters

TUBE SHIPMENT (no suffix)*

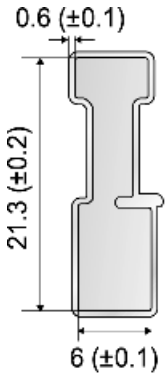

BASE QTY
75

BULK QTY
3000

Tube length 532 (±0.5)

All dimensions are in millimeters

TAPE AND REEL SHIPMENT (suffix "T4")*

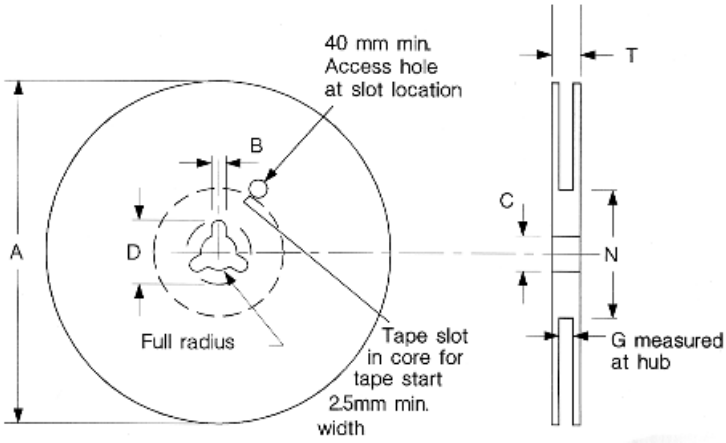

REEL MECHANICAL DATA

DIM.	mm		inch	
	MIN.	MAX.	MIN.	MAX.
A		330		12.992
B	1.5		0.059	
C	12.8	13.2	0.504	0.520
D	20.2		0.795	
G	16.4	18.4	0.645	0.724
N	50		1.968	
T		22.4		0.881

BASE QTY	BULK QTY
2500	2500

TAPE MECHANICAL DATA

DIM.	mm		inch	
	MIN.	MAX.	MIN.	MAX.
A0	6.8	7	0.267	0.275
B0	10.4	10.6	0.409	0.417
B1		12.1		0.476
D	1.5	1.6	0.059	0.063
D1	1.5		0.059	
E	1.65	1.85	0.065	0.073
F	7.4	7.6	0.291	0.299
K0	2.55	2.75	0.100	0.108
P0	3.9	4.1	0.153	0.161
P1	7.9	8.1	0.311	0.319
P2	1.9	2.1	0.075	0.082
R	40		1.574	
W	15.7	16.3	0.618	0.641

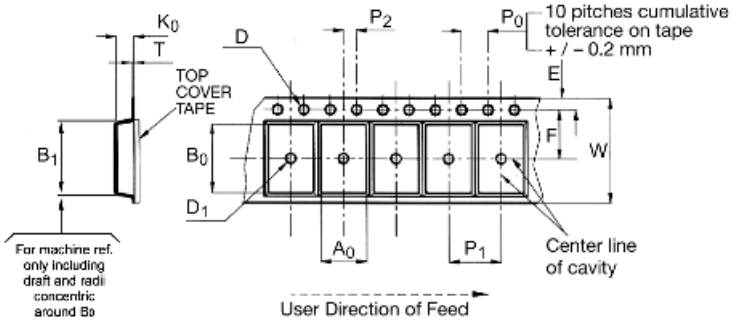

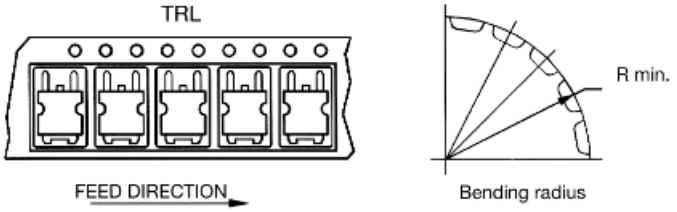

Information furnished is believed to be accurate and reliable. However, STMicroelectronics assumes no responsibility for the consequences of use of such information nor for any infringement of patents or other rights of third parties which may result from its use. No license is granted by implication or otherwise under any patent or patent rights of STMicroelectronics. Specifications mentioned in this publication are subject to change without notice. This publication supersedes and replaces all information previously supplied. STMicroelectronics products are not authorized for use as critical components in life support devices or systems without express written approval of STMicroelectronics.

© The ST logo is a registered trademark of STMicroelectronics

© 2002 STMicroelectronics - Printed in Italy - All Rights Reserved
STMicroelectronics GROUP OF COMPANIES
Australia - Brazil - Canada - China - Finland - France - Germany - Hong Kong - India - Israel - Italy - Japan - Malaysia - Malta - Morocco
Singapore - Spain - Sweden - Switzerland - United Kingdom - United States.
© http://www.st.com