STE07DE220

Hybrid emitter switched bipolar transistor
ESBT® 2200V - 7A - 0.07 Ω power module

Preliminary Data

Features

Table 1.

$V_{CS(ON)}$	I_C	$R_{CS(ON)}$
0.5V	7A	0.07 Ω

- High voltage / high current cascode configuration
- Ultra low equivalent on resistance
- Very fast-switch, up to 150 kHz
- Ultra low C_{ISS}
- Low dynamic $V_{CS(ON)}$

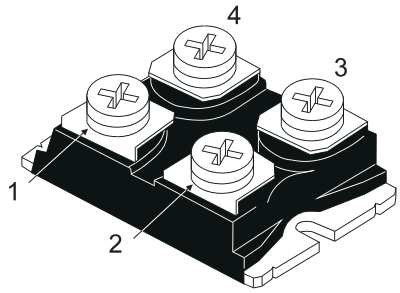

ISOTOP

Applications

- Industrial converters
- Welding

Description

The STE07DE220 is manufactured in a hybrid structure, using dedicated high voltage Bipolar and low voltage MOSFET technologies, aimed to providing the best performance in ESBT topology. The STE07DE220 is designed for use in industrial mains flyback converters and/or special applications.

Figure 1. Internal schematic diagrams

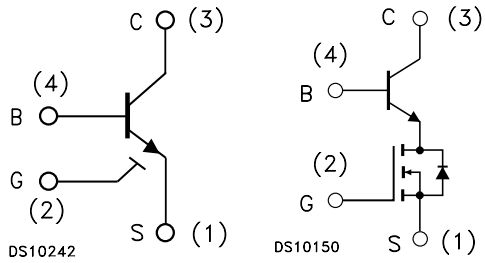

Table 2. Device summary

Order code	Marking	Package	Packaging
STE07DE220	E07DE220	ISOTOP	Tube

This is preliminary information on a new product in developement or undergoing evaluation. Detail are subject to change without notice.

www.st.com

1 Electrical ratings

Table 2. Absolute maximum ratings

Symbol	Parameter	Value	Unit
$V_{CS(SS)}$	Collector-source voltage (V_{BS} =V_{GS} = 0)	2200	V
$V_{BS(OS)}$	Base-source voltage (I_C =0, V_{GS} = 0)	40	V
$V_{SB(OS)}$	Source-base voltage (I_C =0, V_{GS} = 0)	10	V
V_{GS}	Gate-source voltage	± 20	V
I_C	Collector current	7	A
I_{CM}	Collector peak current (t_P < 5 ms)	14	A
I_B	Base current	7	A
I_{BM}	Base peak current (t_P < 1 ms)	14	A
P_{tot}	Total dissipation at T_c ≤25 °C	220	W
T_{stg}	Storage temperature	-40 to 150	°C
T_J	Max. operating junction temperature	125	°C
V_{ISO}	Insulation withstand voltage (AC-RMS) from all four leads to external heatsink	2500	V

Table 3. Thermal data

Symbol	Parameter		Value	Unit
$R_{thj\text{-}case}$	Thermal resistance junction-case	max	0.45	°C/W

2 Electrical characteristics

(T_{case} = 25°C unless otherwise specified)

Table 4. Electrical characteristics

Symbol	Parameter	Test conditions	Min.	Typ.	Max.	Unit
$I_{CS(SS)}$	Collector-source current (V_{BS} =V_{GS} = 0)	V_{CS} = 2200 V			100	µA
$I_{BS(OS)}$	Base-source current (I_C =0, V_{GS} = 0)	V_{BS} = 40 V			10	µA
$I_{SB(OS)}$	Source-base current (I_C =0, V_{GS} = 0)	V_{SB} = 9 V			100	µA
$I_{GS(OS)}$	Gate-source leakage (V_{BS} = 0)	V_{GS} = ± 20 V			500	nA
$V_{CS(ON)}$	Collector-source ON voltage	V_{GS} = 10 V I_C = 7 A I_B = 1.4 A V_{GS} = 10 V I_C = 3.5 A I_B = 0.35 A		0.5 0.4		V V
h_{FE}	DC current gain	V_{GS} = 10 V V_{CS} = 1 V I_C = 7 A V_{GS} = 10 V V_{CS} = 1 V I_C = 3.5 A		9 15		
$V_{BS(ON)}$	Base-source ON voltage	V_{GS} = 10 V I_C = 7 A I_B = 1.4 A V_{GS} = 10 V I_C = 3.5 A I_B = 0.35 A		1 0.8		V V
$V_{GS(th)}$	Gate threshold voltage	V_{BS} = V_{GS} I_B = 250 µA	3	3.7	4.5	V
C_{iss}	Input capacitance (V_{GS} = V_{CB} = 0)	V_{CS} = 25 V f = 1 MHz		t.b.d.		pF
$Q_{GS(tot)}$	Gate-source charge (V_{CB} = 0)	V_{CS} = 25 V V_{GS} = 10 V I_C = 7 A		t.b.d.		nC
 t_s t_f	Inductive load Storage time Fall time	V_{GS} = 10 V R_G = 47 Ω V_{Clamp} = 1760 V t_p = 4 µs I_C = 3.5 A I_B = 0.7 A		 t.b.d. t.b.d.		 ns ns
 t_s t_f	Inductive load Storage time Fall time	V_{GS} = 10 V R_G = 47 Ω V_{Clamp} = 1760 V t_p = 4 µs I_C = 3 .5 A I_B = 0.35 A		 t.b.d. t.b.d.		 ns ns

3 Package mechanical data

In order to meet environmental requirements, ST offers these devices in ECOPACK® packages. These packages have a Lead-free second level interconnect. The category of second level interconnect is marked on the package and on the inner box label, in compliance with JEDEC Standard JESD97. The maximum ratings related to soldering conditions are also marked on the inner box label. ECOPACK is an ST trademark. ECOPACK specifications are available at: www.st.com

ISOTOP MECHANICAL DATA

DIM.	mm			inch		
	MIN.	TYP.	MAX.	MIN.	TYP.	MAX.
A	11.8		12.2	0.465		0.480
A1	8.9		9.1	0.350		0.358
B	7.8		8.2	0.307		0.322
C	0.75		0.85	0.029		0.033
C2	1.95		2.05	0.076		0.080
D	37.8		38.2	1.488		1.503
D1	31.5		31.7	1.240		1.248
E	25.15		25.5	0.990		1.003
E1	23.85		24.15	0.938		0.950
E2		24.8			0.976	
G	14.9		15.1	0.586		0.594
G1	12.6		12.8	0.496		0.503
G2	3.5		4.3	0.137		1.169
F	4.1		4.3	0.161		0.169
F1	4.6		5	0.181		0.196
P	4		4.3	0.157		0.169
P1	4		4.4	0.157		0.173
S	30.1		30.3	1.185		1.193

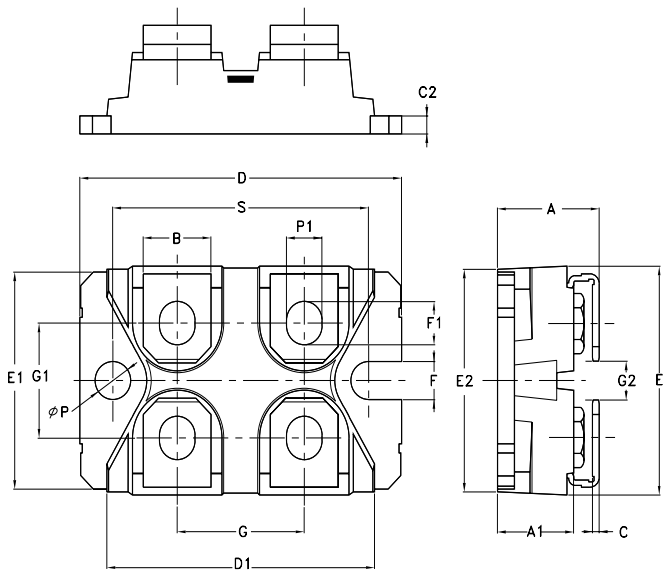

P093A

4 Revision history

Table 5. Document revision history

Date	Revision	Changes
20-May-2008	1	First release.

Please Read Carefully:

Information in this document is provided solely in connection with ST products. STMicroelectronics NV and its subsidiaries (“ST”) reserve the right to make changes, corrections, modifications or improvements, to this document, and the products and services described herein at any time, without notice.

All ST products are sold pursuant to ST’s terms and conditions of sale.

Purchasers are solely responsible for the choice, selection and use of the ST products and services described herein, and ST assumes no liability whatsoever relating to the choice, selection or use of the ST products and services described herein.

No license, express or implied, by estoppel or otherwise, to any intellectual property rights is granted under this document. If any part of this document refers to any third party products or services it shall not be deemed a license grant by ST for the use of such third party products or services, or any intellectual property contained therein or considered as a warranty covering the use in any manner whatsoever of such third party products or services or any intellectual property contained therein.

UNLESS OTHERWISE SET FORTH IN ST’S TERMS AND CONDITIONS OF SALE ST DISCLAIMS ANY EXPRESS OR IMPLIED WARRANTY WITH RESPECT TO THE USE AND/OR SALE OF ST PRODUCTS INCLUDING WITHOUT LIMITATION IMPLIED WARRANTIES OF MERCHANTABILITY, FITNESS FOR A PARTICULAR PURPOSE (AND THEIR EQUIVALENTS UNDER THE LAWS OF ANY JURISDICTION), OR INFRINGEMENT OF ANY PATENT, COPYRIGHT OR OTHER INTELLECTUAL PROPERTY RIGHT.

UNLESS EXPRESSLY APPROVED IN WRITING BY AN AUTHORIZE REPRESENTATIVE OF ST, ST PRODUCTS ARE NOT RECOMMENDED, AUTHORIZED OR WARRANTED FOR USE IN MILITARY, AIR CRAFT, SPACE, LIFE SAVING, OR LIFE SUSTAINING APPLICATIONS, NOR IN PRODUCTS OR SYSTEMS, WHERE FAILURE OR MALFUNCTION MAY RESULT IN PERSONAL INJURY, DEATH, OR SEVERE PROPERTY OR ENVIRONMENTAL DAMAGE. ST PRODUCTS WHICH ARE NOT SPECIFIED AS “AUTOMOTIVE GRADE” MAY ONLY BE USED IN AUTOMOTIVE APPLICATIONS AT USER’S OWN RISK.

Resale of ST products with provisions different from the statements and/or technical features set forth in this document shall immediately void any warranty granted by ST for the ST product or service described herein and shall not create or extend in any manner whatsoever, any liability of ST.

ST and the ST logo are trademarks or registered trademarks of ST in various countries.

Information in this document supersedes and replaces all information previously supplied.

The ST logo is a registered trademark of STMicroelectronics. All other names are the property of their respective owners.

© 2008 STMicroelectronics - All rights reserved

STMicroelectronics group of companies

Australia - Belgium - Brazil - Canada - China - Czech Republic - Finland - France - Germany - Hong Kong - India - Israel - Italy - Japan - Malaysia - Malta - Morocco - Singapore - Spain - Sweden - Switzerland - United Kingdom - United States of America

www.st.com