STH260N6F6-2

N-channel 60 V, 1.7 mΩ typ., 180 A STripFET™ VI DeepGATE™ Power MOSFET in H²PAK-2 package

Datasheet — production data

Features

Order code	V_{DSS}	$R_{DS(on)}$ max	I_D
STH260N6F6-2	60 V	< 2.4 mΩ	180 A

- Low gate charge
- Very low on-resistance
- High avalanche ruggedness

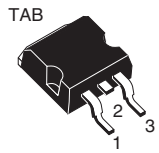

H²PAK-2

Applications

- Switching applications

Description

This device is an N-channel Power MOSFET developed using the 6th generation of STripFET™ DeepGATE™ technology, with a new gate structure. The resulting Power MOSFET exhibits the lowest $R_{DS(on)}$ in all packages.

Figure 1. Internal schematic diagram

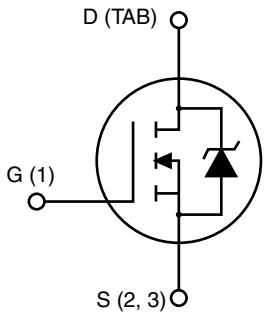

Table 1. Device summary

Order code	Marking	Package	Packaging
STH260N6F6-2	260N6F6	H²PAK-2	Tape and reel

This is information on a product in full production. www.st.com

Contents

1 Electrical ratings 3

2 Electrical characteristics 4

2.1 Electrical characteristics (curves) 6

3 Test circuits 8

4 Package mechanical data 9

5 Revision history 13

1 Electrical ratings

Table 2. Absolute maximum ratings

Symbol	Parameter	Value	Unit
V_{DS}	Drain-source voltage	60	V
V_{GS}	Gate-source voltage	± 20	V
I_D	Drain current (continuous) at T_C = 25 °C	180	A
I_D	Drain current (continuous) at T_C = 100 °C	180	A
I_{DM} (1)	Drain current (pulsed)	720	A
P_{TOT}	Total dissipation at T_C = 25 °C	300	W
	Derating factor	2	W/°C
T_{stg}	Storage temperature	- 55 to 175	°C
T_j	Operating junction temperature		

1. Current limited by package.

Table 3. Thermal data

Symbol	Parameter	Value	Unit
$R_{thj\text{-}case}$	Thermal resistance junction-case max	0.5	°C/W
$R_{thj\text{-}pcb}$ (1)	Thermal resistance junction-pcb max	35	°C/W
T_l	Maximum lead temperature for soldering purpose	300	°C

1. When mounted on FR-4 board of 1 inch², 2 oz Cu.

2 Electrical characteristics

(T_{CASE} = 25 °C unless otherwise specified)

Table 4. On/off states

Symbol	Parameter	Test conditions	Min.	Typ.	Max.	Unit
$V_{(BR)DSS}$	Drain-source breakdown voltage (V_{GS} = 0)	I_D = 250 µA	60			V
I_{DSS}	Zero gate voltage Drain current (V_{GS} = 0)	V_{DS} = 60 V V_{DS} = 60 V, T_C=125 °C			1 100	µA µA
I_{GSS}	Gate-body leakage current (V_{DS} = 0)	V_{GS} = ± 20 V			± 100	nA
$V_{GS(th)}$	Gate threshold voltage	V_{DS} = V_{GS}, I_D = 250 µA	2		4	V
$R_{DS(on)}$	Static drain-source on-resistance	V_{GS} = 10 V, I_D = 60 A		1.7	2.4	mΩ

Table 5. Dynamic

Symbol	Parameter	Test conditions	Min.	Typ.	Max.	Unit
C_{iss}	Input capacitance	V_{DS} = 25 V, f = 1 MHz, V_{GS} = 0	-	11800	-	pF
C_{oss}	Output capacitance			1235		pF
C_{rss}	Reverse transfer capacitance			488		pF
Q_g	Total gate charge	V_{DD} = 30 V, I_D = 120 A, V_{GS} = 10 V *(see Figure 14)*	-	183	-	nC
Q_{gs}	Gate-source charge			53		nC
Q_{gd}	Gate-drain charge			41		nC

Table 6. Switching times

Symbol	Parameter	Test conditions	Min.	Typ.	Max.	Unit
$t_{d(on)}$	Turn-on delay time	V_{DD} = 30 V, I_D = 60 A R_G = 4.7 Ω V_{GS} = 10 V *(see Figure 13)*	-	31.4	-	ns
t_r	Rise time			165		ns
$t_{d(off)}$	Turn-off-delay time		-	144.4	-	ns
t_f	Fall time			62.6		ns

Table 7. Source drain diode

Symbol	Parameter	Test conditions	Min.	Typ.	Max.	Unit
I_{SD}	Source-drain current				180	A
I_{SDM} (1)	Source-drain current (pulsed)				720	A
V_{SD} (2)	Forward on voltage	I_{SD} = 180 A, V_{GS} = 0			1.1	V
t_{rr} Q_{rr} I_{RRM}	Reverse recovery time Reverse recovery charge Reverse recovery current	I_{SD} = 120 A, V_{DD} = 48 V di/dt = 100 A/µs, T_j = 150 °C *(see Figure 15)*	-	55.6 116 3.8		ns nC A

1. Current limited by package.
2. Pulsed: pulse duration = 300 µs, duty cycle 1.5%

2.1 Electrical characteristics (curves)

Figure 2. Safe operating area

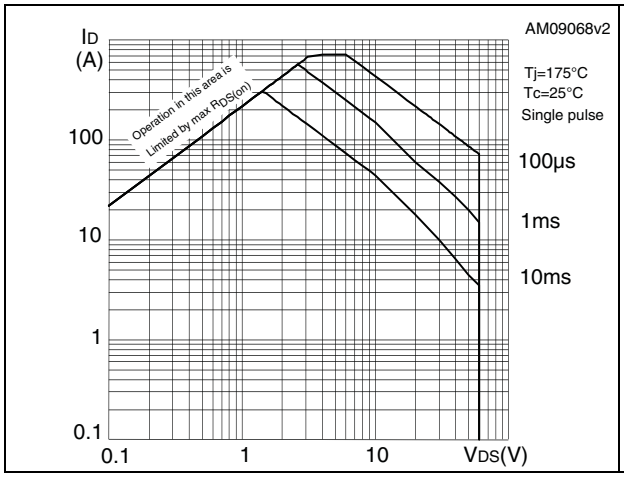

Figure 3. Thermal impedance

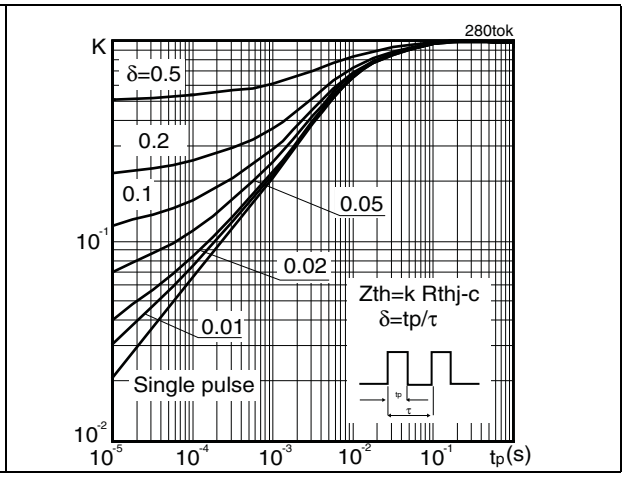

Figure 4. Output characteristics

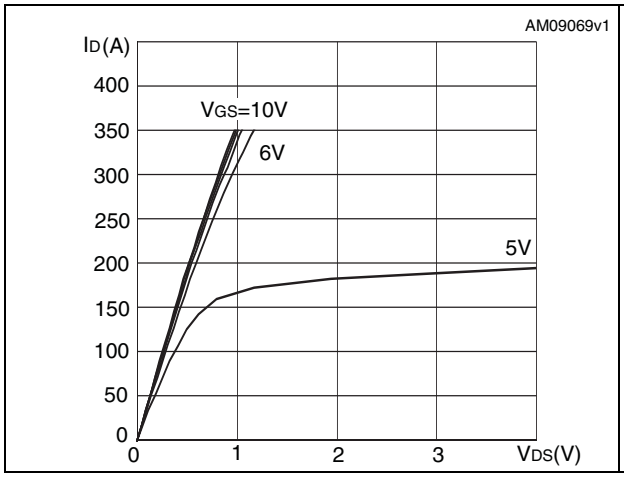

Figure 5. Transfer characteristics

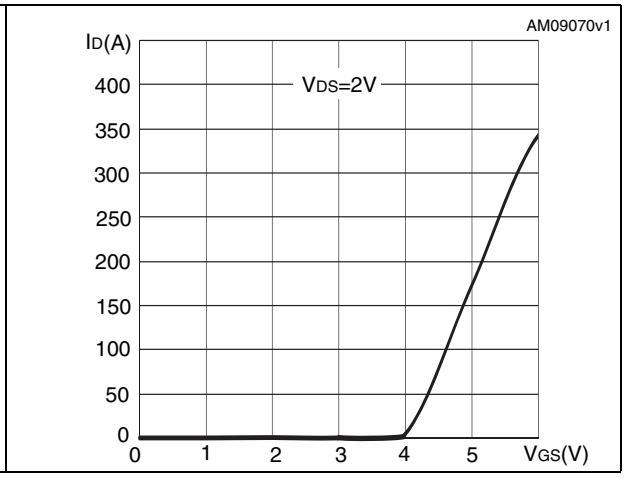

Figure 6. Normalized B_{VDSS} vs. temperature

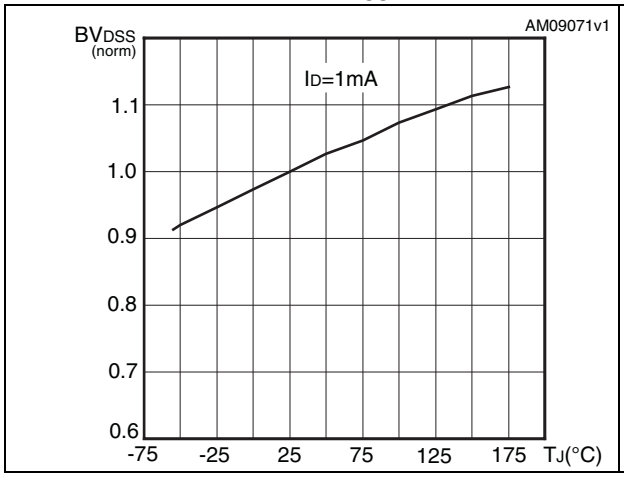

Figure 7. Static drain-source on-resistance

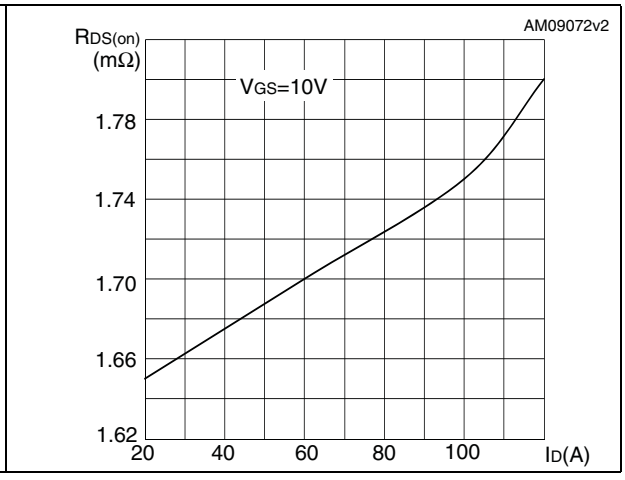

Figure 8. Gate charge vs. gate-source voltage

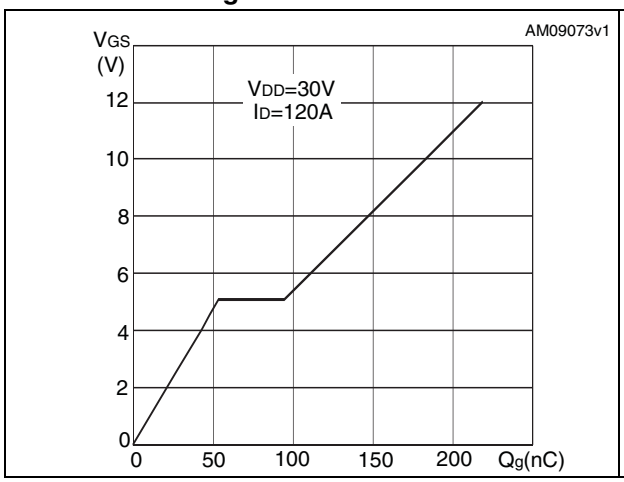

Figure 9. Capacitance variations

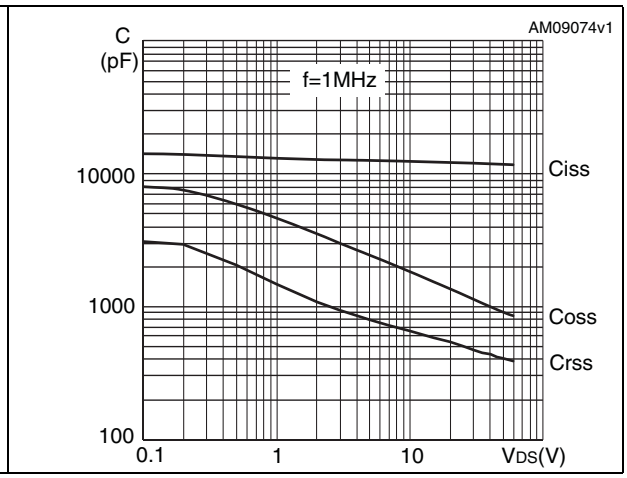

Figure 10. Normalized gate threshold voltage vs. temperature

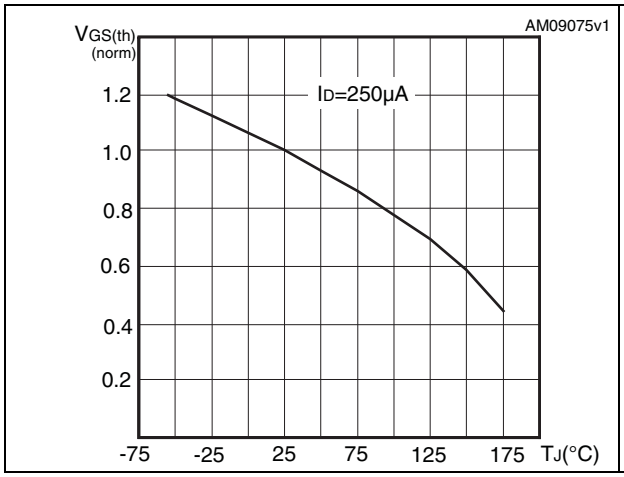

Figure 11. Normalized on-resistance vs. temperature

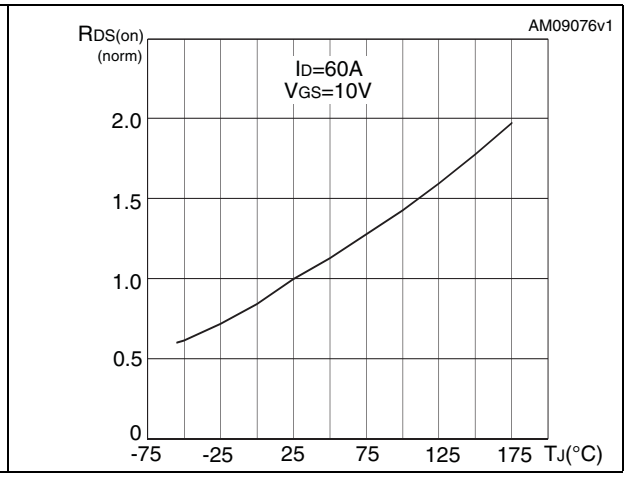

Figure 12. Source-drain diode forward characteristics

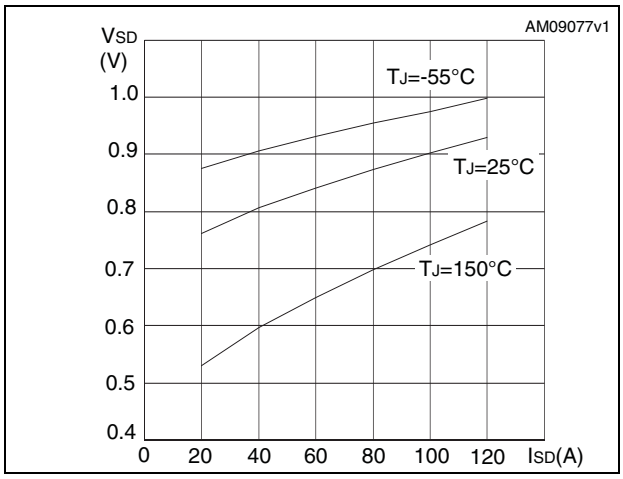

3 Test circuits

Figure 13. Switching times test circuit for resistive load

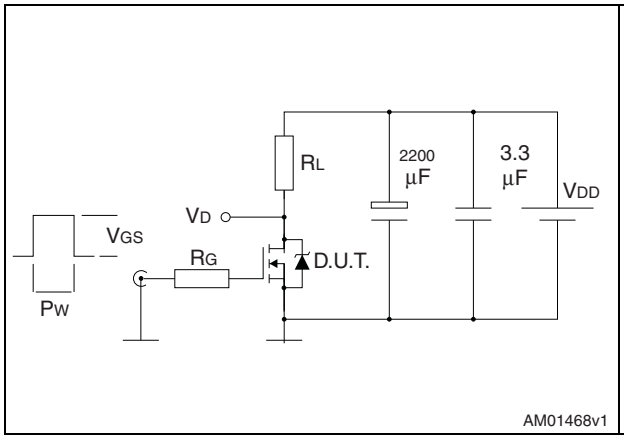

Figure 14. Gate charge test circuit

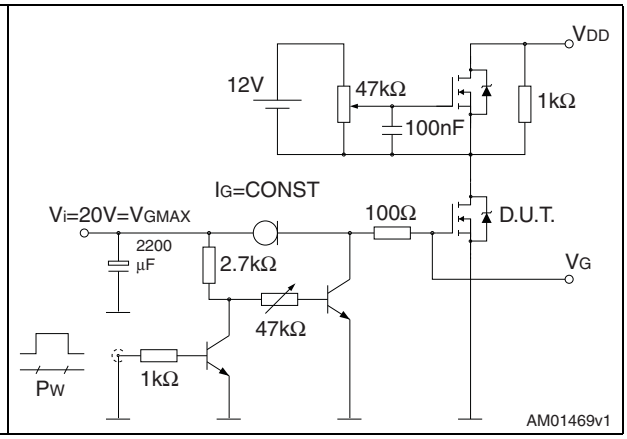

Figure 15. Test circuit for inductive load switching and diode recovery times

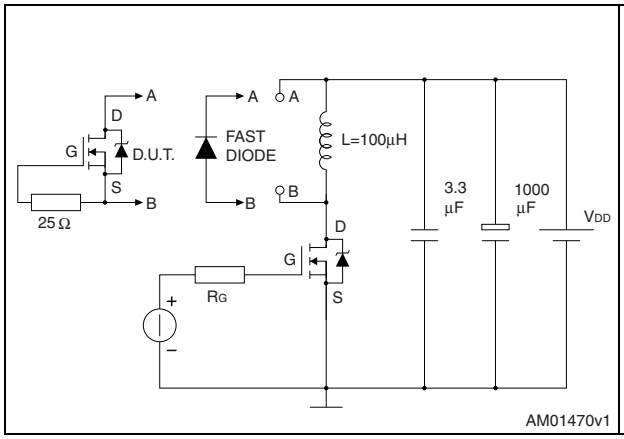

Figure 16. Unclamped inductive load test circuit

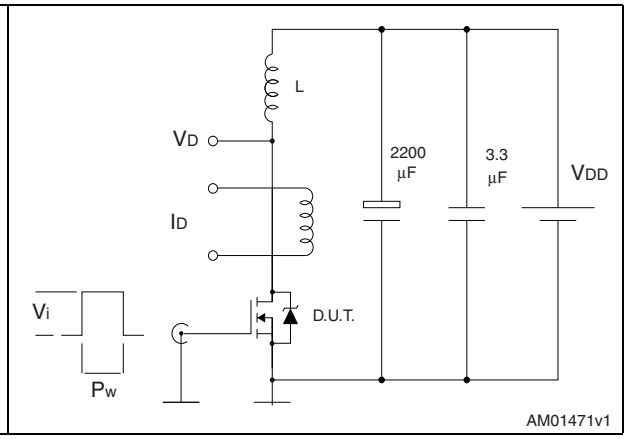

Figure 17. Unclamped inductive waveform

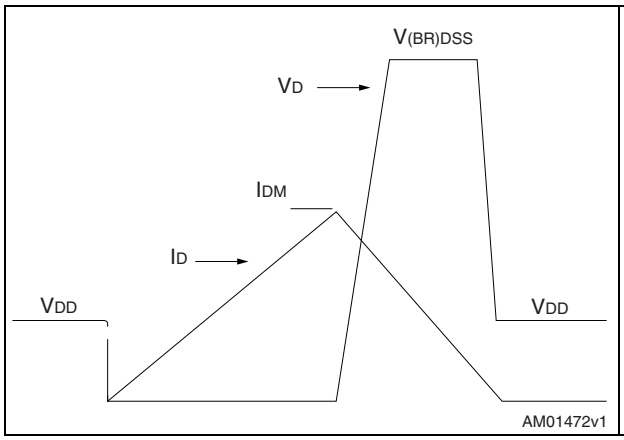

Figure 18. Switching time waveform

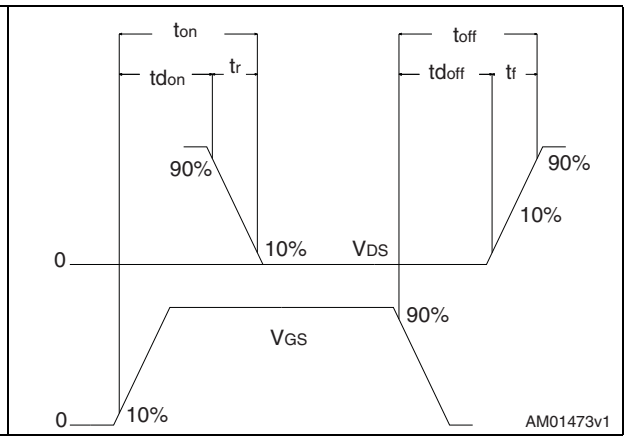

4 Package mechanical data

In order to meet environmental requirements, ST offers these devices in different grades of ECOPACK® packages, depending on their level of environmental compliance. ECOPACK® specifications, grade definitions and product status are available at: www.st.com. ECOPACK is an ST trademark.

Table 8. H²PAK 2 leads mechanical data

Dim.	mm		
	Min.	Typ.	Max.
A	4.30	-	4.80
A1	0.03		0.20
C	1.17		1.37
e	4.98		5.18
E	0.50		0.90
F	0.78		0.85
H	10.00		10.40
H1	7.40		7.80
L	15.30		15.80
L1	1.27		1.40
L2	4.93		5.23
L3	6.85		7.25
L4	1.5		1.7
M	2.6		2.9
R	0.20		0.60
V	0°		8°

Figure 19. H²PAK 2 leads drawing

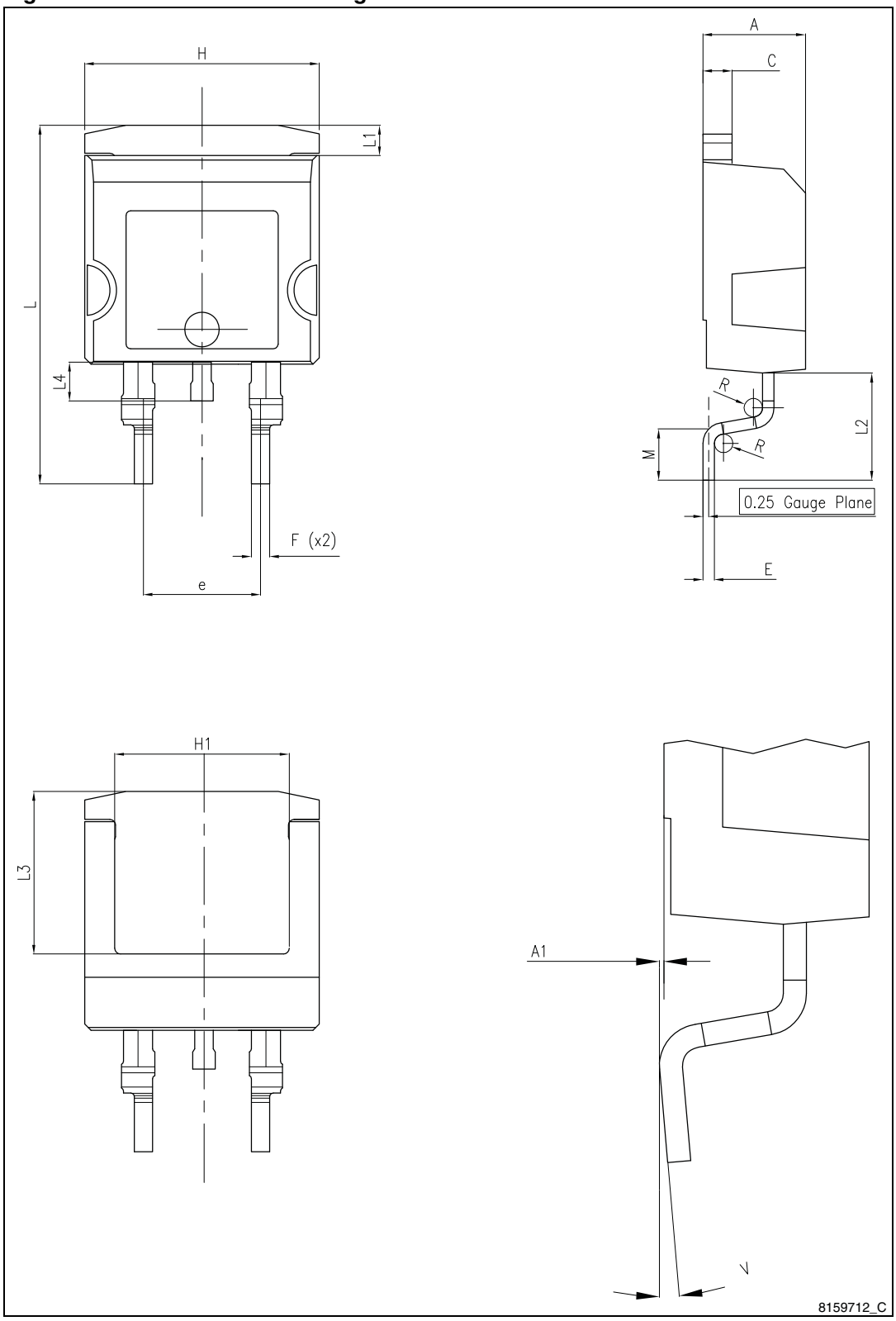

Figure 20. H²PAK 2 recommended footprint

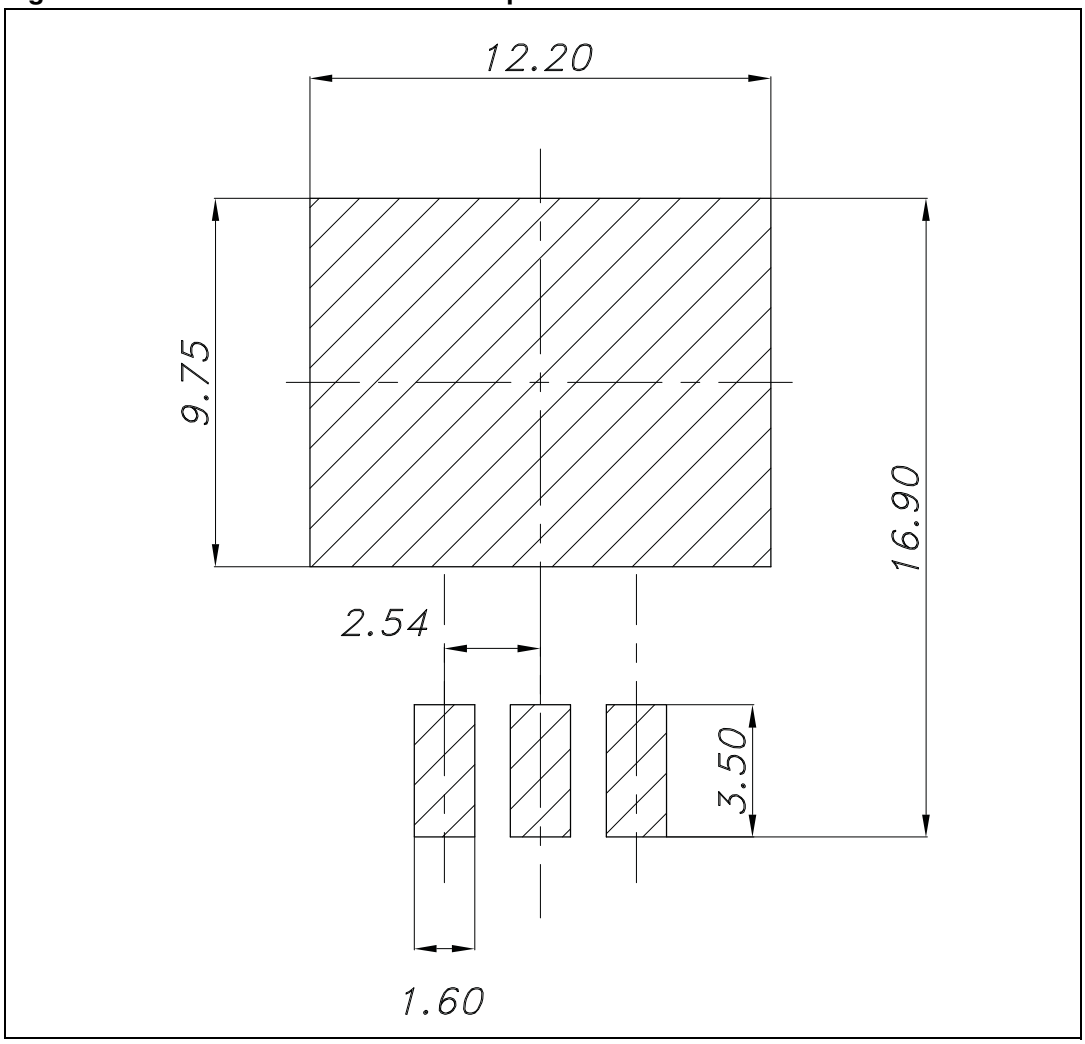

5 Revision history

Table 9. Document revision history

Date	Revision	Changes
31-May-2011	1	First release.
25-Aug-2011	2	Updated mechanical data.
01-Feb-2012	3	Updated *Table 2: Absolute maximum ratings*. Minor text changes.
06-Jul-2012	4	*Section 2.1: Electrical characteristics (curves)* has been added.

Please Read Carefully:

Information in this document is provided solely in connection with ST products. STMicroelectronics NV and its subsidiaries (“ST”) reserve the right to make changes, corrections, modifications or improvements, to this document, and the products and services described herein at any time, without notice.

All ST products are sold pursuant to ST’s terms and conditions of sale.

Purchasers are solely responsible for the choice, selection and use of the ST products and services described herein, and ST assumes no liability whatsoever relating to the choice, selection or use of the ST products and services described herein.

No license, express or implied, by estoppel or otherwise, to any intellectual property rights is granted under this document. If any part of this document refers to any third party products or services it shall not be deemed a license grant by ST for the use of such third party products or services, or any intellectual property contained therein or considered as a warranty covering the use in any manner whatsoever of such third party products or services or any intellectual property contained therein.

UNLESS OTHERWISE SET FORTH IN ST’S TERMS AND CONDITIONS OF SALE ST DISCLAIMS ANY EXPRESS OR IMPLIED WARRANTY WITH RESPECT TO THE USE AND/OR SALE OF ST PRODUCTS INCLUDING WITHOUT LIMITATION IMPLIED WARRANTIES OF MERCHANTABILITY, FITNESS FOR A PARTICULAR PURPOSE (AND THEIR EQUIVALENTS UNDER THE LAWS OF ANY JURISDICTION), OR INFRINGEMENT OF ANY PATENT, COPYRIGHT OR OTHER INTELLECTUAL PROPERTY RIGHT.

UNLESS EXPRESSLY APPROVED IN WRITING BY TWO AUTHORIZED ST REPRESENTATIVES, ST PRODUCTS ARE NOT RECOMMENDED, AUTHORIZED OR WARRANTED FOR USE IN MILITARY, AIR CRAFT, SPACE, LIFE SAVING, OR LIFE SUSTAINING APPLICATIONS, NOR IN PRODUCTS OR SYSTEMS WHERE FAILURE OR MALFUNCTION MAY RESULT IN PERSONAL INJURY, DEATH, OR SEVERE PROPERTY OR ENVIRONMENTAL DAMAGE. ST PRODUCTS WHICH ARE NOT SPECIFIED AS "AUTOMOTIVE GRADE" MAY ONLY BE USED IN AUTOMOTIVE APPLICATIONS AT USER’S OWN RISK.

Resale of ST products with provisions different from the statements and/or technical features set forth in this document shall immediately void any warranty granted by ST for the ST product or service described herein and shall not create or extend in any manner whatsoever, any liability of ST.

ST and the ST logo are trademarks or registered trademarks of ST in various countries.

Information in this document supersedes and replaces all information previously supplied.

The ST logo is a registered trademark of STMicroelectronics. All other names are the property of their respective owners.

© 2012 STMicroelectronics - All rights reserved

STMicroelectronics group of companies

Australia - Belgium - Brazil - Canada - China - Czech Republic - Finland - France - Germany - Hong Kong - India - Israel - Italy - Japan - Malaysia - Malta - Morocco - Philippines - Singapore - Spain - Sweden - Switzerland - United Kingdom - United States of America

www.st.com