# STL86N3LLH6AG

## Automotive-grade N-channel 30 V, 4 mΩ typ., 80 A STripFET™ H6 Power MOSFET in a PowerFLAT™ 5x6 package

Datasheet - production data

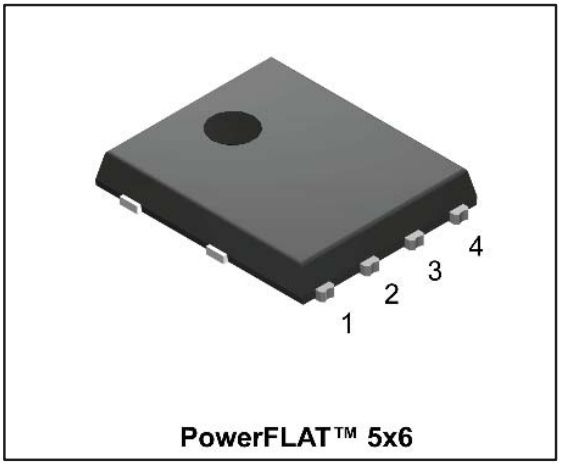


**Figure 1: Internal schematic diagram**

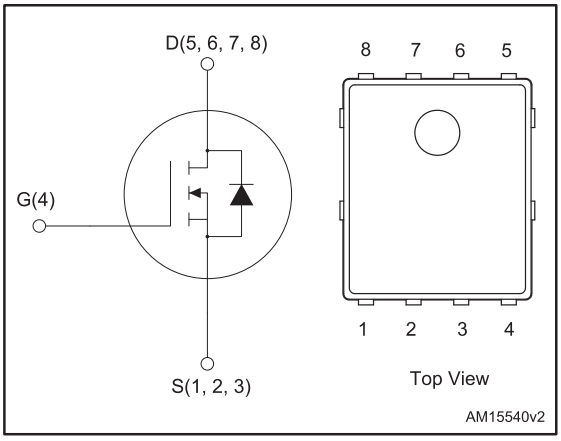


## Features

| Order code | $V_{DS}$ | $R_{DS(on)}$ max. | $I_D$ |
|---|---|---|---|
| STL86N3LLH6AG | 30 V | 5.2 mΩ | 80 A |

- AEC-Q101 qualified
- Very low on-resistance
- Very low gate charge
- High avalanche ruggedness
- Low gate drive power loss
- Logic level
- Wettable flank package

## Applications

- Switching applications

## Description

This device is an N-channel Power MOSFET developed using the STripFET™ H6 technology with a new trench gate structure. The resulting Power MOSFET exhibits very low $R_{DS(on)}$ in all packages.

**Table 1: Device summary**

| Order code | Marking | Package | Packing |
|---|---|---|---|
| STL86N3LLH6AG | 86N3LLH6 | PowerFLAT™ 5x6 | Tape and reel |



This is information on a product in full production.

# Contents

1 Electrical ratings ..... 3
2 Electrical characteristics ..... 4
2.2 Electrical characteristics (curves) ..... 6
3 Test circuits ..... 8
4 Package information ..... 9
4.1 PowerFLAT™5x6 WF type R package information ..... 9
4.2 PowerFLAT™ 5x6 WF packing information ..... 12
5 Revision history ..... 14

# 1 Electrical ratings

**Table 2: Absolute maximum ratings**

| Symbol | Parameter | Value | Unit |
|---|---|---|---|
| $V_{DS}$ | Drain-source voltage | 30 | V |
| $V_{GS}$ | Gate-source voltage | ± 20 | V |
| $I_D$ (1) | Drain current (continuous) at $T_C$ = 25 °C | 80 | A |
| $I_D$ (1) | Drain current (continuous) at $T_C$ = 70 °C | 60 | |
| $I_D$ (1) | Drain current (continuous) at $T_C$ = 100 °C | 51 | A |
| $I_{DM}$ (1), (2) | Drain current (pulsed) | 320 | A |
| $I_D$ (3) | Drain current (continuous) at $T_{pcb}$ = 25 °C | 21 | A |
| $I_D$ (3) | Drain current (continuous) at $T_{pcb}$ = 70 °C | 15.7 | A |
| $I_D$ (3) | Drain current (continuous) at $T_{pcb}$ = 100 °C | 13.1 | A |
| $I_{DM}$ (2), (3) | Drain current (pulsed) | 84 | A |
| $P_{TOT}$ (1) | Total dissipation at $T_C$ = 25 °C | 60 | W |
| $P_{TOT}$ (3) | Total dissipation at $T_{pcb}$ = 25 °C | 4 | |
| $T_{stg}$ | Storage temperature range | - 55 to 150 | °C |
| $T_j$ | Operating junction temperature range | | |

**Notes:**

(1)The value is rated according to $R_{thj\text{-}c}$.

(2)Pulse width limited by safe operating area.

(3)The value is rated according to $R_{thj\text{-}pcb}$.

**Table 3: Thermal data**

| Symbol | Parameter | Value | Unit |
|---|---|---|---|
| $R_{thj\text{-}case}$ | Thermal resistance junction-case | 2.08 | °C/W |
| $R_{thj\text{-}pcb}$ (1) | Thermal resistance junction-pcb | 31.3 | |

**Notes:**

(1)When mounted on FR-4 board of 1 inch², 2oz Cu, t < 10 s

# 2 Electrical characteristics

($T_C$ = 25 °C unless otherwise specified)

**Table 4: On/off-states**

| Symbol | Parameter | Test conditions | Min. | Typ. | Max. | Unit |
|---|---|---|---|---|---|---|
| $V_{(BR)DSS}$ | Drain-source breakdown voltage | $V_{GS}$ = 0, $I_D$ = 1 mA | 30 | | | V |
| $I_{DSS}$ | Zero gate voltage drain current | $V_{GS}$ = 0, $V_{DS}$ = 30 V | | | 1 | µA |
| | | $V_{GS}$ = 0, $V_{DS}$ = 30 V, $T_C$ = 125 °C | | | 10 | |
| $I_{GSS}$ | Gate-body leakage current | $V_{DS}$ = 0, $V_{GS}$ = ± 20 V | | | ±100 | nA |
| $V_{GS(th)}$ | Gate threshold voltage | $V_{DS}$ = $V_{GS}$, $I_D$ = 250 µA | 1 | 1.7 | 2.5 | V |
| $R_{DS(on)}$ | Static drain-source on-resistance | $V_{GS}$ = 10 V, $I_D$ = 10.5 A | | 4 | 5.2 | mΩ |
| | | $V_{GS}$ = 4.5 V, $I_D$ = 10.5 A | | 6.7 | 7.6 | mΩ |

**Table 5: Dynamic**

| Symbol | Parameter | Test conditions | Min. | Typ. | Max. | Unit |
|---|---|---|---|---|---|---|
| $C_{iss}$ | Input capacitance | $V_{DS}$ = 25 V, f = 1 MHz, $V_{GS}$ = 0 | 1350 | 1690 | 2030 | pF |
| $C_{oss}$ | Output capacitance | | 230 | 290 | 350 | pF |
| $C_{rss}$ | Reverse transfer capacitance | | 140 | 176 | 210 | pF |
| $Q_g$ | Total gate charge | $V_{DD}$ = 15 V, $I_D$ = 21 A, $V_{GS}$ = 4.5 V (see *Figure 14: "Test circuit for gate charge bahavior"*) | - | 17 | - | nC |
| $Q_{gs}$ | Gate-source charge | | - | 8 | - | nC |
| $Q_{gd}$ | Gate-drain charge | | - | 6 | - | nC |
| $R_G$ | Gate input resistance | f = 1 MHz, Gate DC Bias = 0, Test signal level = 20 mV open drain, ID = 0 | 1.25 | 1.7 | 1.2 | Ω |

**Table 6: Switching times**

| Symbol | Parameter | Test conditions | Min. | Typ. | Max. | Unit |
|---|---|---|---|---|---|---|
| $t_{d(on)}$ | Turn-on delay time | $V_{DD}$ = 15 V, $I_D$ = 10.5 A, $R_G$ = 4.7 Ω, $V_{GS}$ = 10 V See *Figure 13: "Test circuit for resistive load switching times"* and *Figure 18: "Switching time waveform"* | - | 9.5 | - | ns |
| $t_r$ | Rise time | | - | 30 | - | ns |
| $t_{d(off)}$ | Turn-off delay time | | - | 37 | - | ns |
| $t_f$ | Fall time | | - | 12 | - | ns |

**Table 7: Source-drain diode**

| Symbol | Parameter | Test conditions | Min. | Typ. | Max. | Unit |
|---|---|---|---|---|---|---|
| $I_{SD}$ | Source-drain current | | - | | 21 | A |
| $I_{SDM}$(1) | Source-drain current (pulsed) | | - | | 84 | A |
| $V_{SD}$(2) | Forward on voltage | $I_{SD}$ = 21 A, $V_{GS}$ = 0 | - | | 1.1 | V |
| $t_{rr}$ | Reverse recovery time | $I_{SD}$ = 10.5 A, di/dt = 100 A/µs<br>$V_{DD}$ = 25 V<br>See *Figure 15: "Test circuit for inductive load switching and diode recovery times"* | - | 24 | | ns |
| $Q_{rr}$ | Reverse recovery charge | | - | 16.8 | | nC |
| $I_{RRM}$ | Reverse recovery current | | - | 1.4 | | A |

**Notes:**

(1)Pulse width limited by safe operating area.

(2)Pulsed: pulse duration = 300 µs, duty cycle 1.5%.

## 2.2 Electrical characteristics (curves)

**Figure 2: Safe operating area**

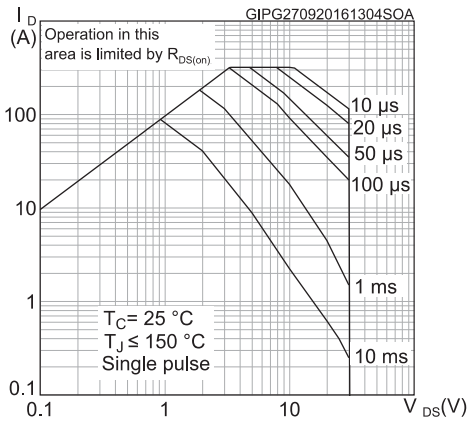


**Figure 3: Thermal impedance**

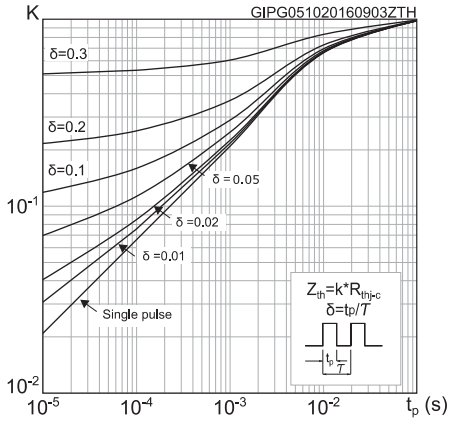


**Figure 4: Output characteristics**

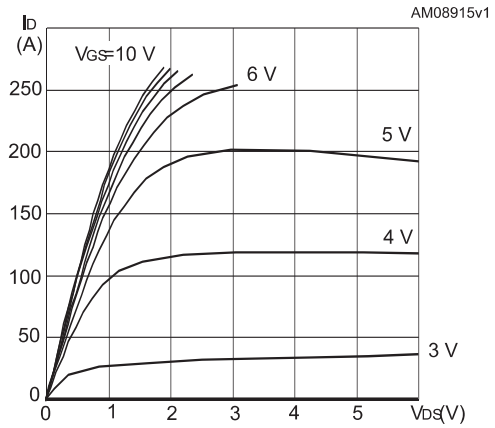


**Figure 5: Transfer characteristics**

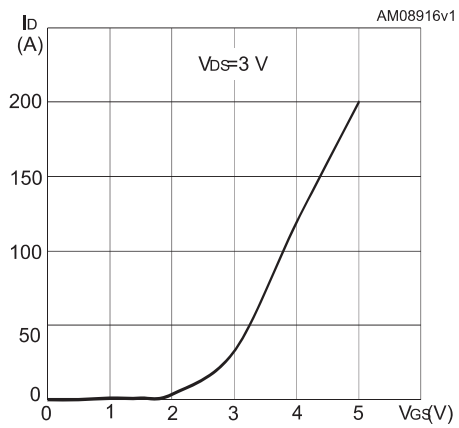


**Figure 6: Normalized $V_{(BR)DSS}$ vs temperature**

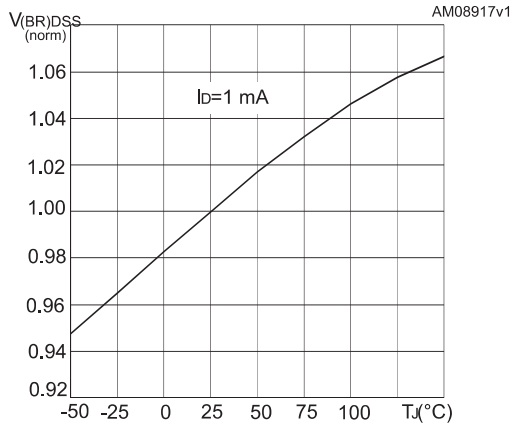


**Figure 7: Static drain-source on-resistance**

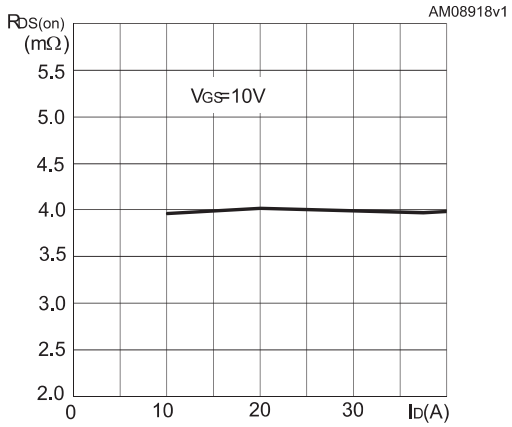

**Figure 8: Gate charge vs gate-source voltage**

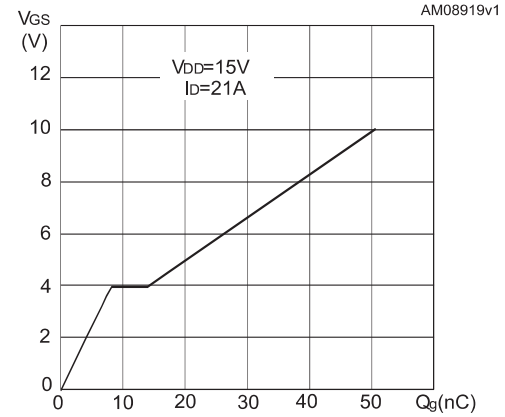


**Figure 9: Capacitance variations**

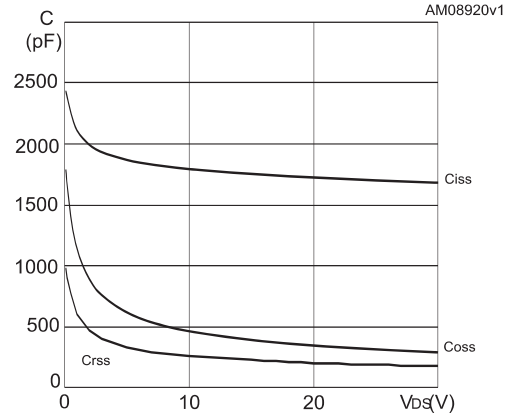


**Figure 10: Normalized gate threshold voltage vs temperature**

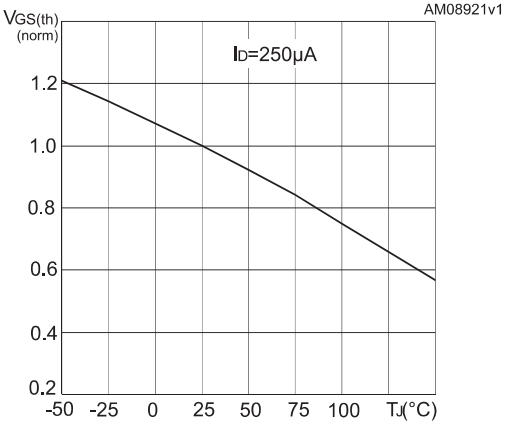


**Figure 11: Normalized on resistance vs temperature**

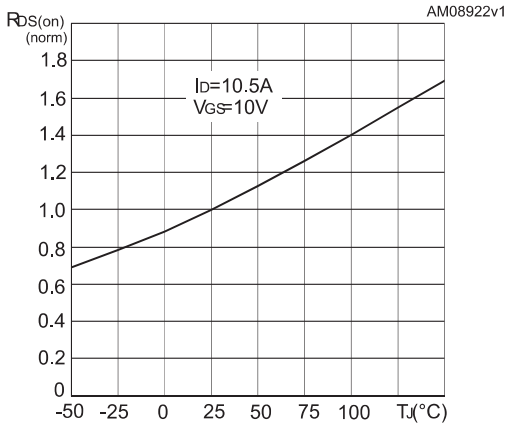


**Figure 12: Source-drain diode forward characteristics**

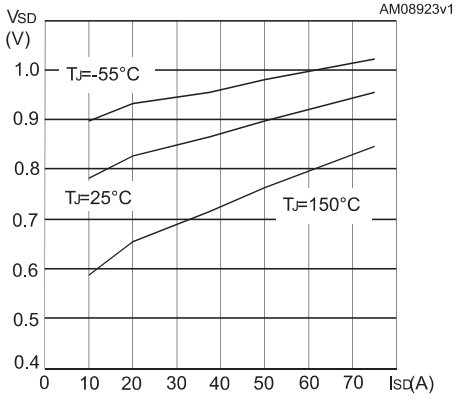

# 3 Test circuits

**Figure 13: Test circuit for resistive load switching times**

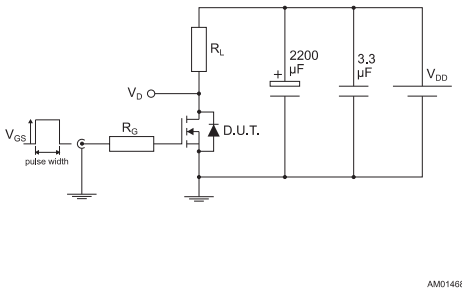


**Figure 14: Test circuit for gate charge behavior**

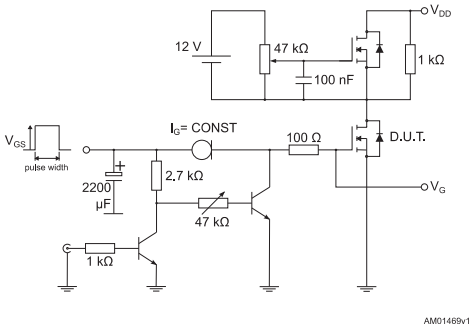


**Figure 15: Test circuit for inductive load switching and diode recovery times**

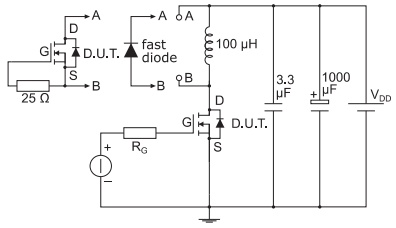


**Figure 16: Unclamped inductive load test circuit**

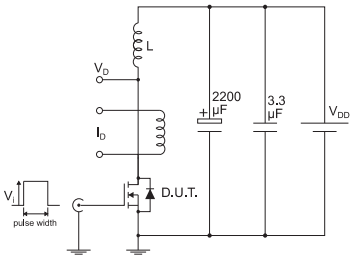


**Figure 17: Unclamped inductive waveform**

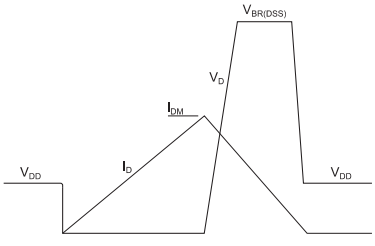


**Figure 18: Switching time waveform**

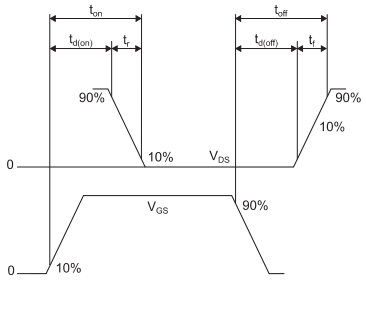

# 4 Package information

In order to meet environmental requirements, ST offers these devices in different grades of ECOPACK® packages, depending on their level of environmental compliance. ECOPACK® specifications, grade definitions and product status are available at: ***www.st.com***. ECOPACK® is an ST trademark.

## 4.1 PowerFLAT™5x6 WF type R package information

**Figure 19: PowerFLAT™ 5x6 WF type R package outline**

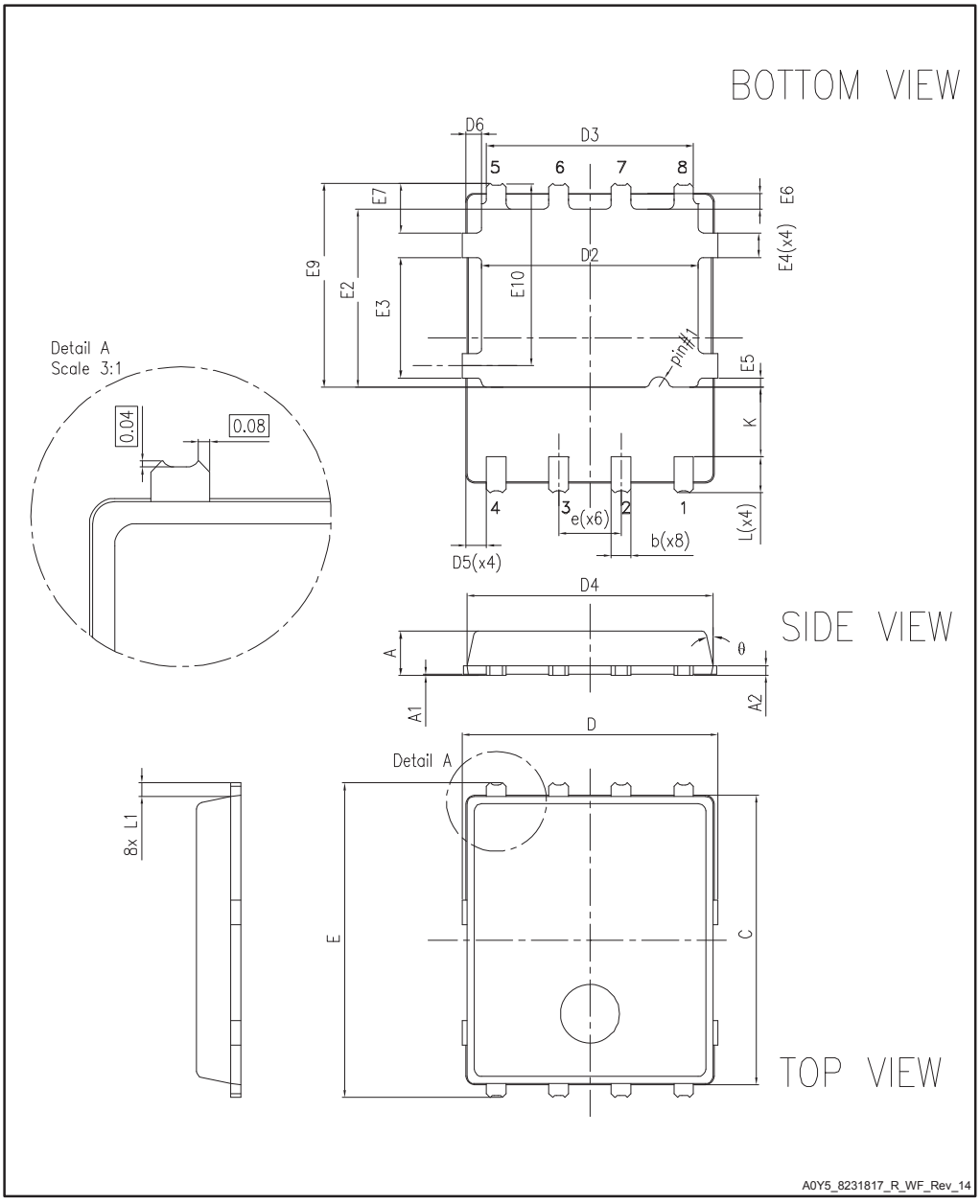

Table 8: PowerFLAT™ 5x6 WF type R mechanical data

| Dim. | mm | | |
|---|---|---|---|
| | Min. | Typ. | Max. |
| A | 0.80 | | 1.00 |
| A1 | 0.02 | | 0.05 |
| A2 | | 0.25 | |
| b | 0.30 | | 0.50 |
| C | 5.80 | 6.00 | 6.10 |
| D | 5.00 | 5.20 | 5.40 |
| D2 | 4.15 | | 4.45 |
| D3 | 4.05 | 4.20 | 4.35 |
| D4 | 4.80 | 5.00 | 5.10 |
| D5 | 0.25 | 0.4 | 0.55 |
| D6 | 0.15 | 0.3 | 0.45 |
| e | | 1.27 | |
| E | 6.20 | 6.40 | 6.60 |
| E2 | 3.50 | | 3.70 |
| E3 | 2.35 | | 2.55 |
| E4 | 0.40 | | 0.60 |
| E5 | 0.08 | | 0.28 |
| E6 | 0.20 | 0.325 | 0.45 |
| E7 | 0.85 | 1.00 | 1.15 |
| E9 | 4.00 | 4.20 | 4.40 |
| E10 | 3.55 | 3.70 | 3.85 |
| K | 1.275 | | 1.575 |
| L | 0.725 | 0.825 | 0.925 |
| L1 | 0.175 | 0.275 | 0.375 |
| Θ | 0° | | 12° |

Figure 20: PowerFLAT™ 5x6 recommended footprint (dimensions are in mm)

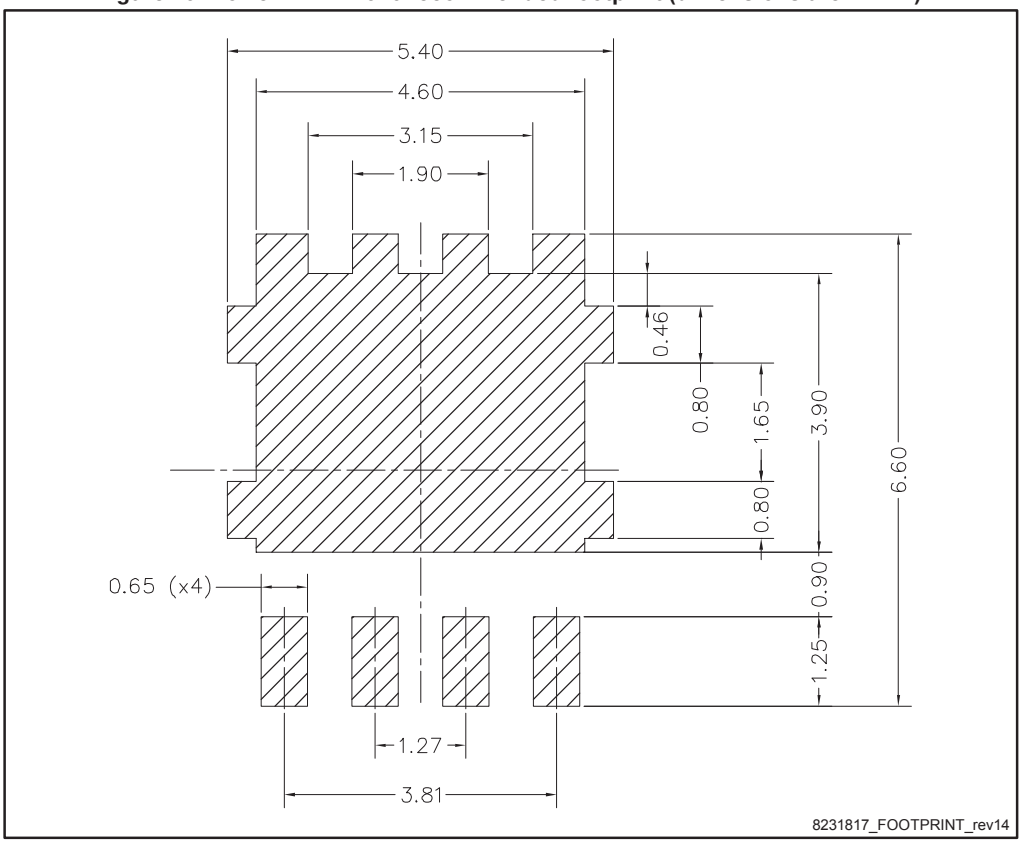

## 4.2 PowerFLAT™ 5x6 WF packing information

**Figure 21: PowerFLAT™ 5x6 WF tape (dimensions are in mm)**

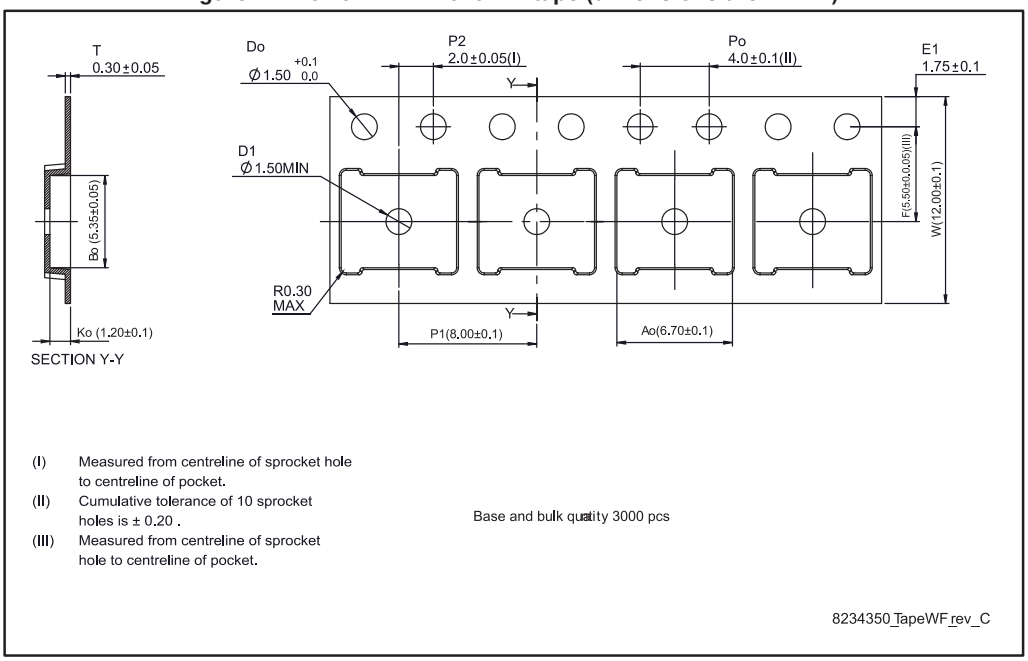


**Figure 22: PowerFLAT™ 5x6 package orientation in carrier tape**

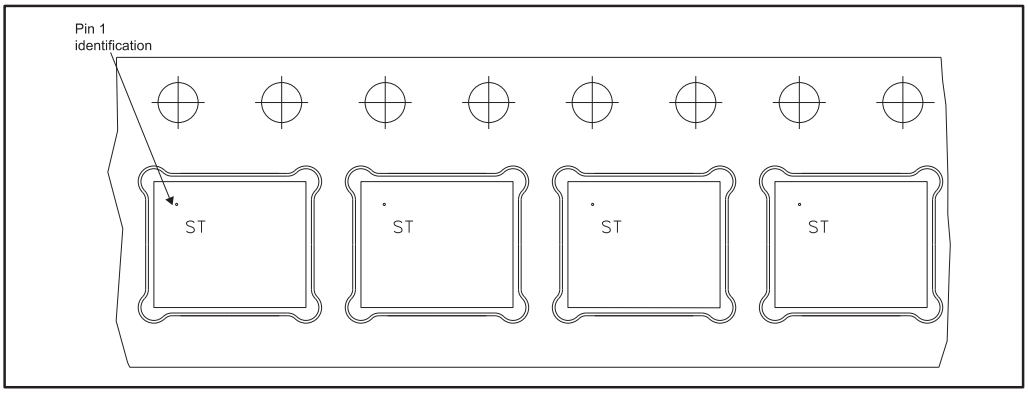

Figure 23: PowerFLAT™ 5x6 reel (dimensions are in mm)

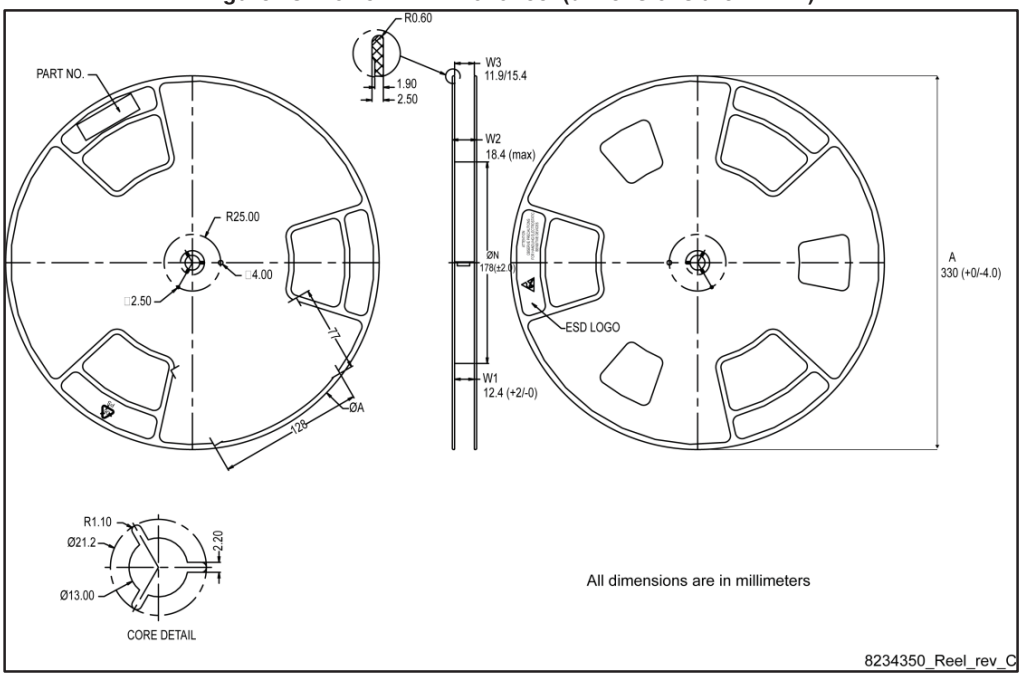

# 5 Revision history

Table 9: Document revision history

| Date | Revision | Changes |
|---|---|---|
| 26-Sep-2014 | 1 | First release. |
| 21-Jan-2015 | 2 | Document status promoted from preliminary to production data.<br>Updated *Section 4: Package mechanical data.* |
| 03-Feb-2015 | 3 | Updated title and features in cover page. |
| 03-Oct-2016 | 4 | Updated title and features in cover page.<br>Updated *Table 2: "Absolute maximum ratings"* and *Table 4: "On/off-states"*.<br>Changed *Figure 2: "Safe operating area"* and *Figure 3: "Thermal impedance"*. |

## IMPORTANT NOTICE – PLEASE READ CAREFULLY

STMicroelectronics NV and its subsidiaries (“ST”) reserve the right to make changes, corrections, enhancements, modifications, and improvements to ST products and/or to this document at any time without notice. Purchasers should obtain the latest relevant information on ST products before placing orders. ST products are sold pursuant to ST’s terms and conditions of sale in place at the time of order acknowledgement.

Purchasers are solely responsible for the choice, selection, and use of ST products and ST assumes no liability for application assistance or the design of Purchasers’ products.

No license, express or implied, to any intellectual property right is granted by ST herein.

Resale of ST products with provisions different from the information set forth herein shall void any warranty granted by ST for such product.

ST and the ST logo are trademarks of ST. All other product or service names are the property of their respective owners.

Information in this document supersedes and replaces information previously supplied in any prior versions of this document.

© 2016 STMicroelectronics – All rights reserved