STL8N65M5

N-channel 650 V, 0.56 Ω, 7 A MDmesh™ V Power MOSFET in PowerFLAT™ 5x5

Features

Order code	V_{DSS} @ T_{Jmax}	$R_{DS(on)}$ max	I_D
STL8N65M5	710 V	< 0.6 Ω	7 A (1)

1. The value is rated according to $R_{thj\text{-}case}$

- Worldwide best $R_{DS(on)}$ * area
- Higher V_{DSS} rating
- High dv/dt capability
- Excellent switching performance
- Easy to drive
- 100% avalanche tested

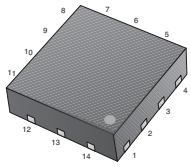

PowerFLAT™ 5x5

Applications

- Switching applications

Description

This device is an N-channel MDmesh™ V Power MOSFET based on an innovative proprietary vertical process technology, which is combined with STMicroelectronics' well-known PowerMESH™ horizontal layout structure. The resulting product has extremely low on-resistance, which is unmatched among silicon-based Power MOSFETs, making it especially suitable for applications which require superior power density and outstanding efficiency.

Figure 1. Internal schematic diagram

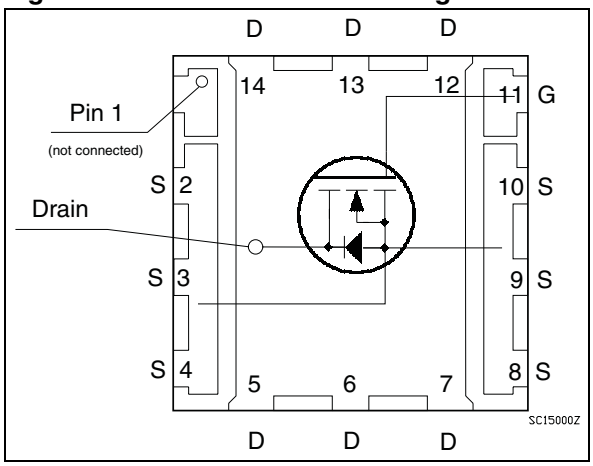

Table 1. Device summary

Order code	Marking	Package	Packaging
STL8N65M5	8N65M5	PowerFLAT™ 5x5	Tape and reel

Contents

1 Electrical ratings 3

2 Electrical characteristics 4

2.1 Electrical characteristics (curves) 6

3 Test circuits 8

4 Package mechanical data 9

5 Revision history 12

1 Electrical ratings

Table 2. Absolute maximum ratings

Symbol	Parameter	Value	Unit
V_{DS}	Drain-source voltage (V_{GS} = 0)	650	V
V_{GS}	Gate-source voltage	± 25	V
I_D (1)	Drain current (continuous) at T_C = 25 °C	7	A
I_D (1)	Drain current (continuous) at T_C = 100 °C	4.4	A
I_D(2)	Drain current (continuous) at T_{amb} = 25 °C	1.4	A
I_D(2)	Drain current (continuous) at T_{amb} = 100 °C	0.6	A
I_{DM}(2),(3)	Drain current (pulsed)	5.6	A
P_{TOT} (2)	Total dissipation at T_{amb} = 25 °C	2.5	W
P_{TOT}(1)	Total dissipation at T_C = 25 °C	70	W
I_{AR}	Avalanche current, repetitive or not-repetitive (pulse width limited by T_j max)	2	A
E_{AS}	Single pulse avalanche energy (starting T_j = 25 °C, I_D = I_{AR}, V_{DD} = 50 V)	120	mJ
dv/dt (4)	Peak diode recovery voltage slope	15	V/ns
T_{stg}	Storage temperature	- 55 to 150	°C
T_j	Max. operating junction temperature	150	°C

1. The value is rated according to $R_{thj\text{-}case}$
2. When mounted on FR-4 board of inch², 2oz Cu
3. Pulse with limited by safe operating area.
4. $I_{SD} \leq 7$ A, di/dt $\leq$ 400 A/µs, $V_{Peak} < V_{(BR)DSS}$, V_{DD} = 400 V.

Table 3. Thermal data

Symbol	Parameter	Value	Unit
$R_{thj\text{-}case}$	Thermal resistance junction-case max	1.78	°C/W
$R_{thj\text{-}pcb}$(1)	Thermal resistance junction-pcb max	60	°C/W

1. When mounted on 1inch² FR-4 board, 2 oz Cu

2 Electrical characteristics

(T_C = 25 °C unless otherwise specified)

Table 4. On /off states

Symbol	Parameter	Test conditions	Min.	Typ.	Max.	Unit
$V_{(BR)DSS}$	Drain-source breakdown voltage (V_{GS} = 0)	I_D = 1 mA	650			V
I_{DSS}	Zero gate voltage drain current (V_{GS} = 0)	V_{DS} = 650 V V_{DS} = 650 V, T_C=125 °C			1 100	µA µA
I_{GSS}	Gate-body leakage current (V_{DS} = 0)	V_{GS} = ± 25 V			100	nA
$V_{GS(th)}$	Gate threshold voltage	V_{DS} = V_{GS}, I_D = 250 µA	3	4	5	V
$R_{DS(on)}$	Static drain-source on resistance	V_{GS} = 10 V, I_D = 3.5 A		0.56	0.6	Ω

Table 5. Dynamic

Symbol	Parameter	Test conditions	Min.	Typ.	Max.	Unit
C_{iss} C_{oss} C_{rss}	Input capacitance Output capacitance Reverse transfer capacitance	V_{DS} = 100 V, f = 1 MHz, V_{GS} = 0	-	690 18 2	-	pF pF pF
$C_{o(tr)}$(1)	Equivalent capacitance time related	V_{DS} = 0 to 520 V, V_{GS} = 0	-	17	-	pF
$C_{o(er)}$(2)	Equivalent capacitance energy related		-	52	-	pF
R_G	Intrinsic gate resistance	f = 1 MHz open drain	-	2.4	-	Ω
Q_g Q_{gs} Q_{gd}	Total gate charge Gate-source charge Gate-drain charge	V_{DD} = 520 V, I_D = 3.5 A, V_{GS} = 10 V (see *Figure 15*)	-	15 3.6 6	-	nC nC nC

1. $C_{oss\ eq.}$ time related is defined as a constant equivalent capacitance giving the same charging time as C_{oss} when V_{DS} increases from 0 to 80% V_{DSS}
2. $C_{oss\ eq.}$ energy related is defined as a constant equivalent capacitance giving the same stored energy as C_{oss} when V_{DS} increases from 0 to 80% V_{DSS}

Table 6. Switching times

Symbol	Parameter	Test conditions	Min.	Typ.	Max	Unit
$t_{d(off)}$	Turn-off delay time	V_{DD} = 400 V, I_D = 4 A,	-	50	-	ns
$t_{r\ (V)}$	Rise time	R_G = 4.7 Ω, V_{GS} = 10 V		14		ns
$t_{c(off)}$	Cross time	(see *Figure 16*),		20		ns
$t_{f\ (i)}$	Fall time	(see *Figure 19*)		11		ns

Table 7. Source drain diode

Symbol	Parameter	Test conditions	Min.	Typ.	Max.	Unit
I_{SD}	Source-drain current		-		7	A
I_{SDM} (1)	Source-drain current (pulsed)				28	A
V_{SD} (2)	Forward on voltage	I_{SD} = 7 A, V_{GS} = 0	-		1.5	V
t_{rr}	Reverse recovery time	I_{SD} = 7A, di/dt = 100 A/µs	-	200		ns
Q_{rr}	Reverse recovery charge	V_{DD} = 100 V (see *Figure 16*)		1.6		µC
I_{RRM}	Reverse recovery current			16		A
t_{rr}	Reverse recovery time	I_{SD} = 7 A, di/dt = 100 A/µs	-	263		ns
Q_{rr}	Reverse recovery charge	V_{DD} = 100 V, T_j = 150 °C		1.9		µC
I_{RRM}	Reverse recovery current	(see *Figure 16*)		15		A

1. Pulse width limited by safe operating area
2. Pulsed: pulse duration = 300 µs, duty cycle 1.5%

2.1 Electrical characteristics (curves)

Figure 2. Safe operating area

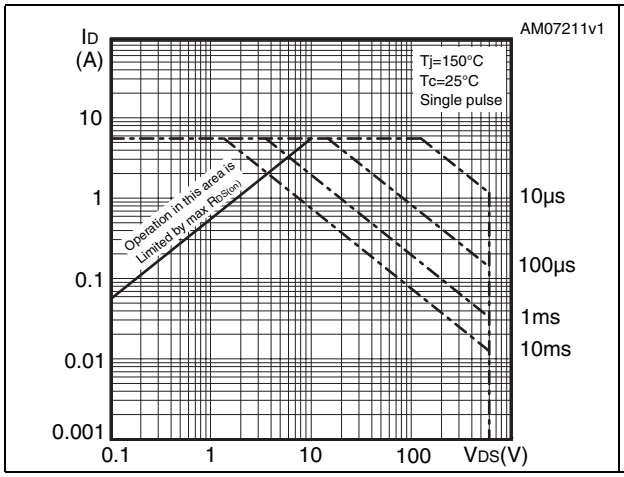

Figure 3. Thermal impedance

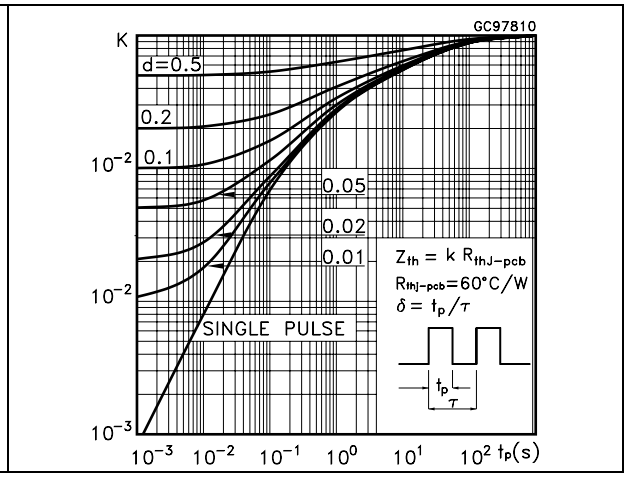

Figure 4. Output characteristics

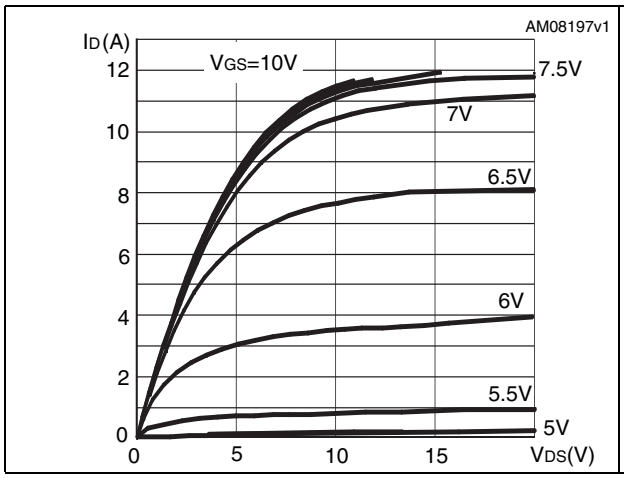

Figure 5. Transfer characteristics

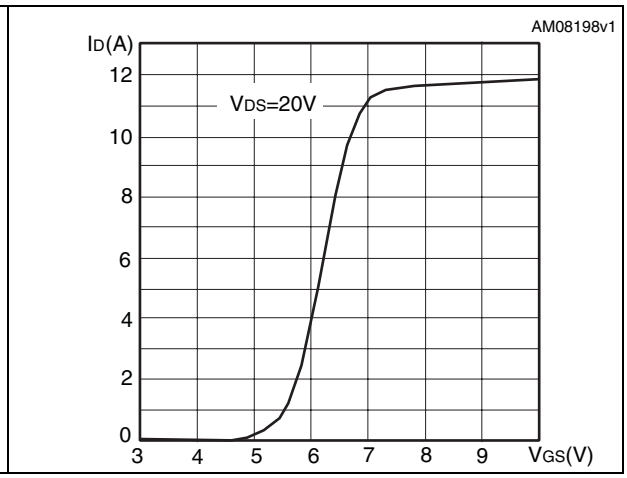

Figure 6. Gate charge vs gate-source voltage

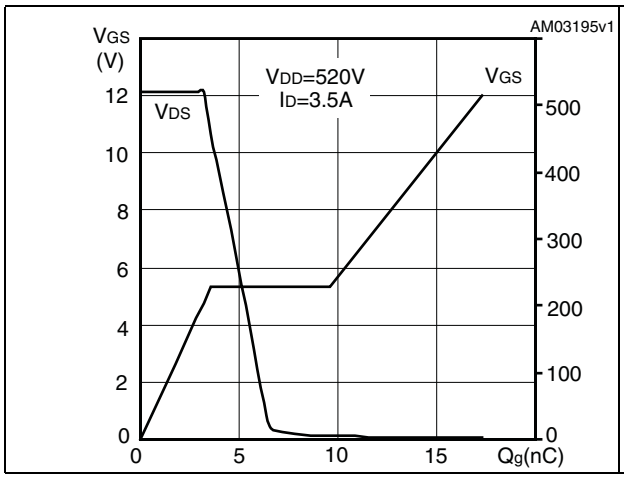

Figure 7. Static drain-source on resistance

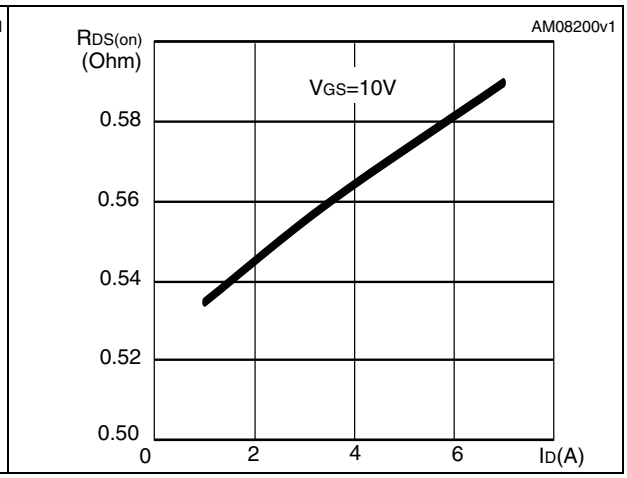

Figure 8. Capacitance variations

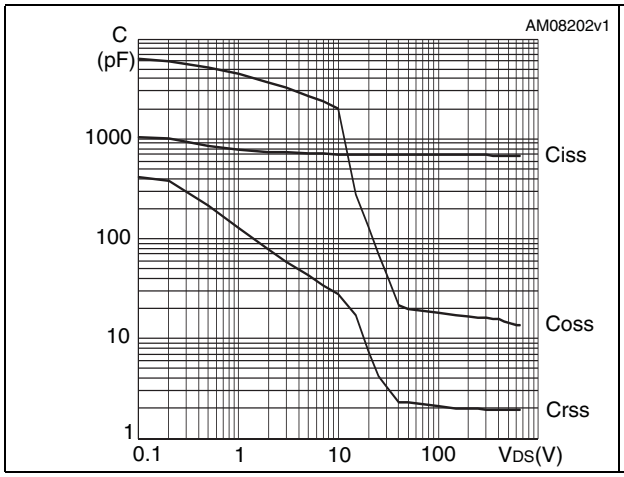

Figure 9. Output capacitance stored energy

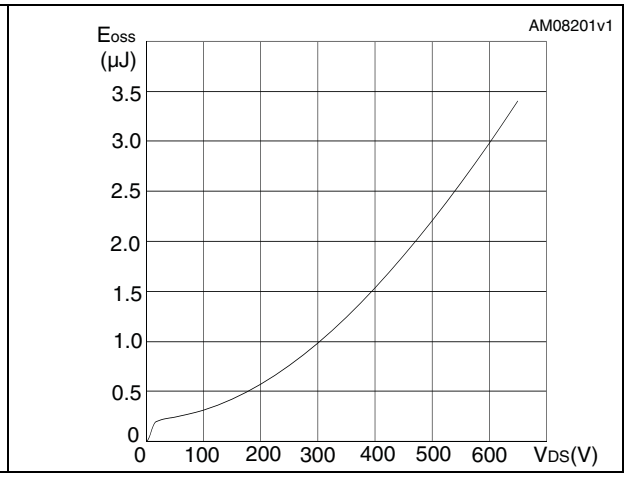

Figure 10. Normalized gate threshold voltage vs temperature

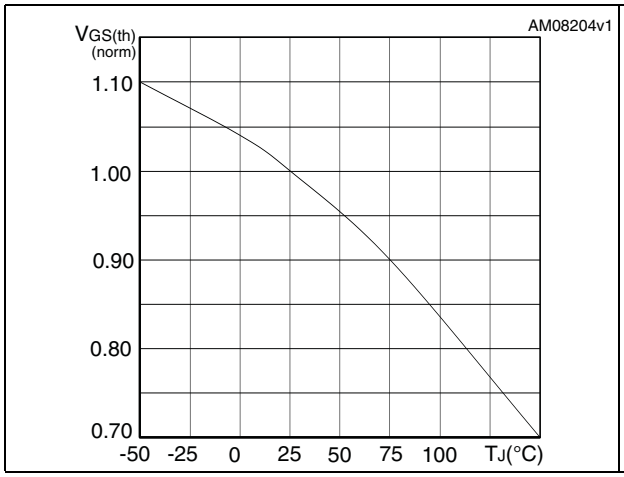

Figure 11. Normalized on resistance vs temperature

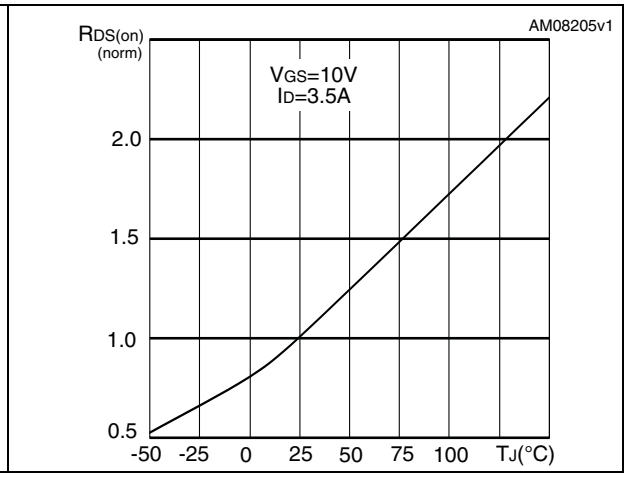

Figure 12. Switching losses vs gate resistance (1)

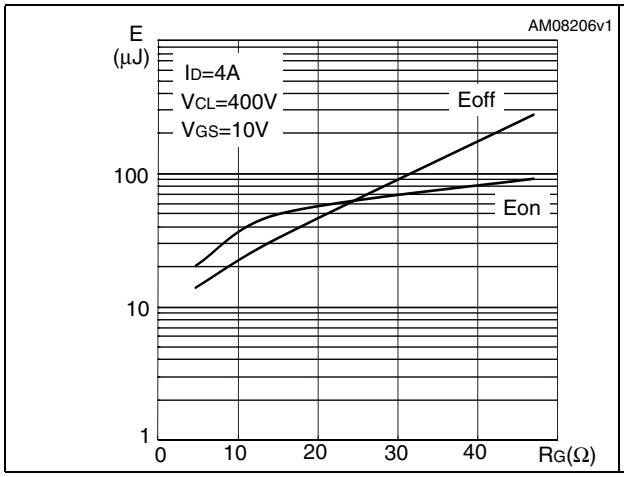

Figure 13. Normalized B_{VDSS} vs temperature

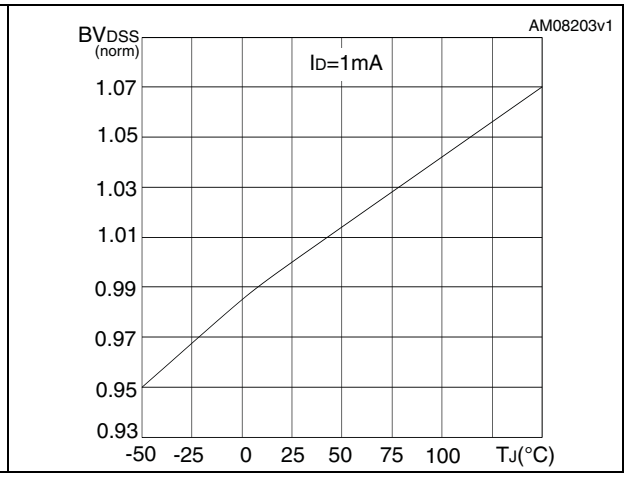

1. Eon including reverse recovery of a SiC diode

3 Test circuits

Figure 14. Switching times test circuit for resistive load

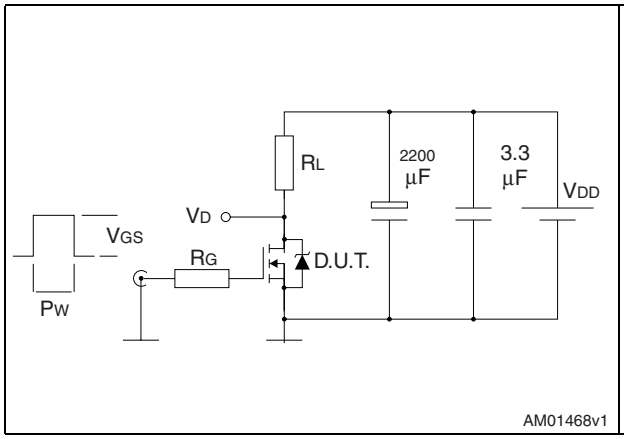

Figure 15. Gate charge test circuit

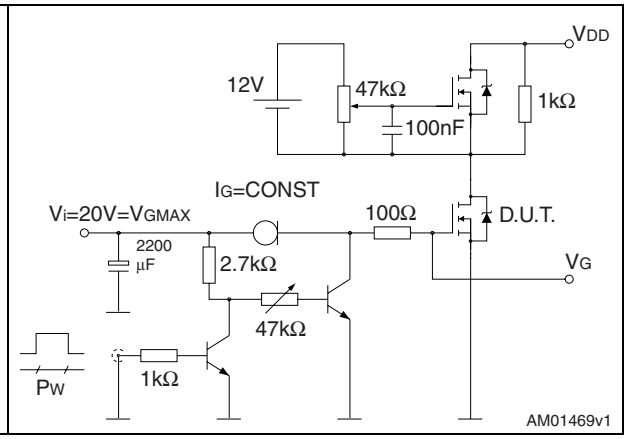

Figure 16. Test circuit for inductive load switching and diode recovery times

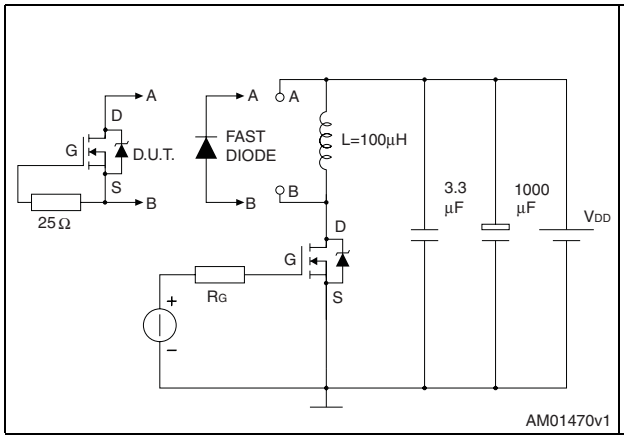

Figure 17. Unclamped inductive load test circuit

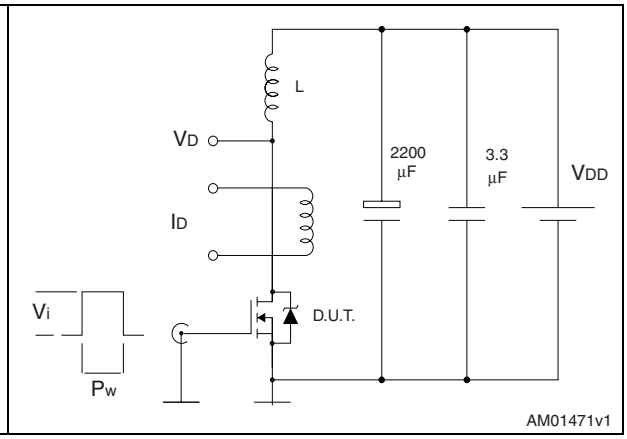

Figure 18. Unclamped inductive waveform

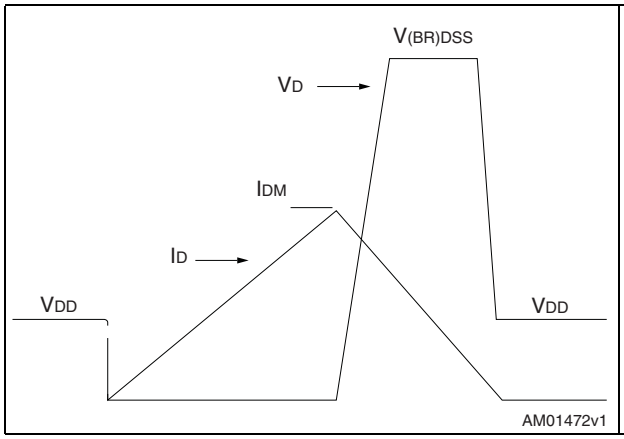

Figure 19. Switching time waveform

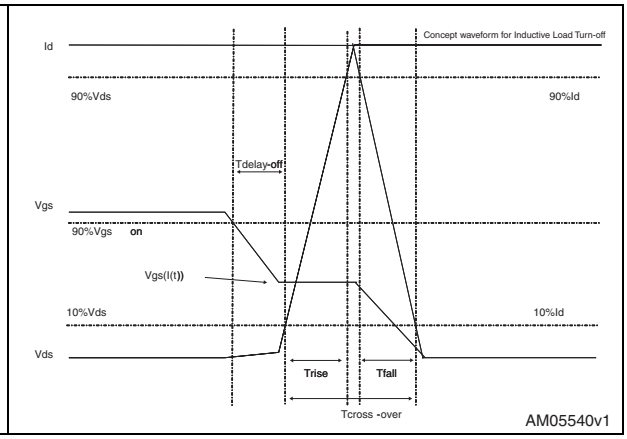

4 Package mechanical data

In order to meet environmental requirements, ST offers these devices in different grades of ECOPACK® packages, depending on their level of environmental compliance. ECOPACK® specifications, grade definitions and product status are available at: www.st.com. ECOPACK is an ST trademark.

Table 8. PowerFLAT™ 5x5 mechanical dimensions

Dim.	mm		
	Min.	Typ.	Max.
A	0.80	0.90	1.0
A1	0	0.02	0.05
A3		0.24	
D	4.90	5.0	5.10
E	4.90	5.0	5.10
E2	2.49	2.57	2.64
e	1.22	1.27	1.32
b	0.43	0.51	0.58
c	0.64	0.71	0.79

Figure 20. PowerFLAT™ 5x5 mechanical drawing

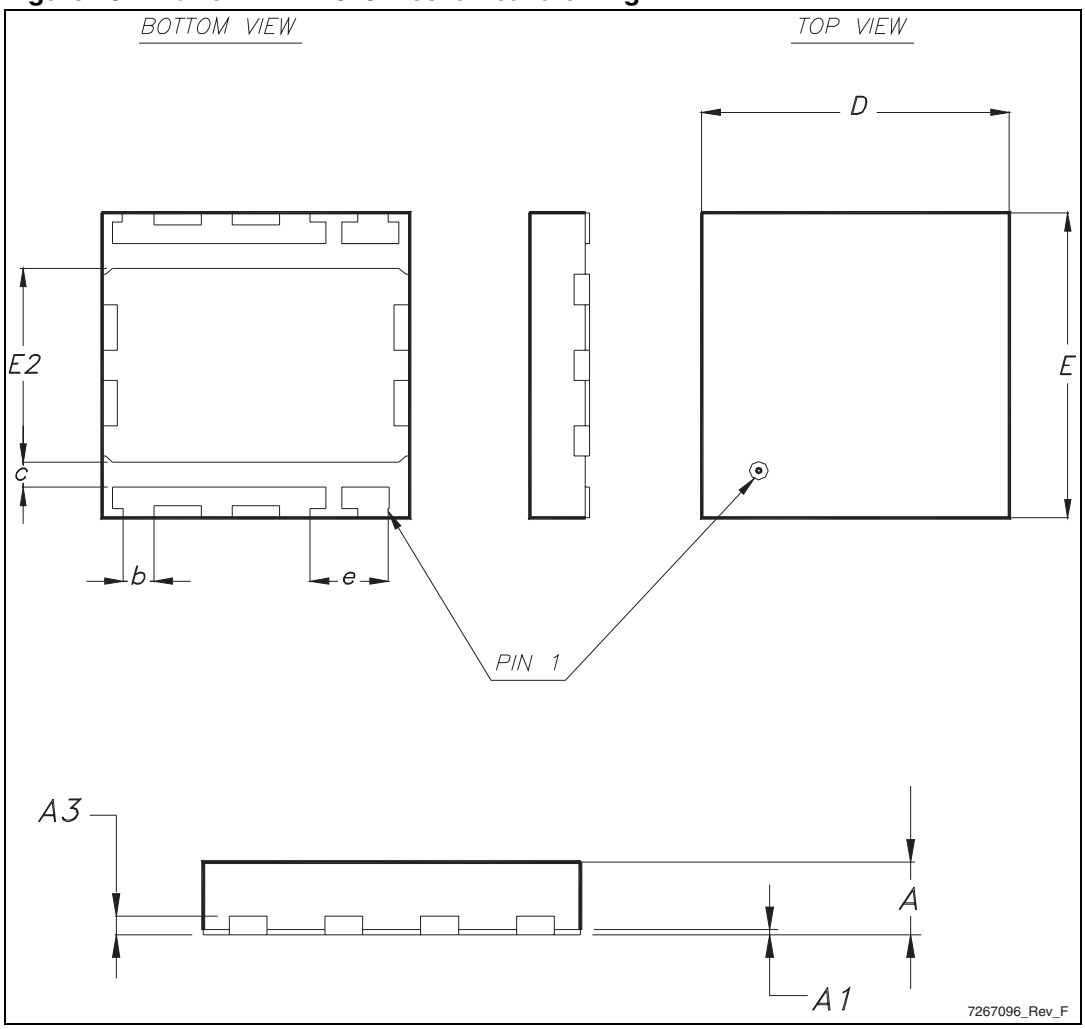

Figure 21. PowerFLAT™(5x5) recommended footprint (mm)

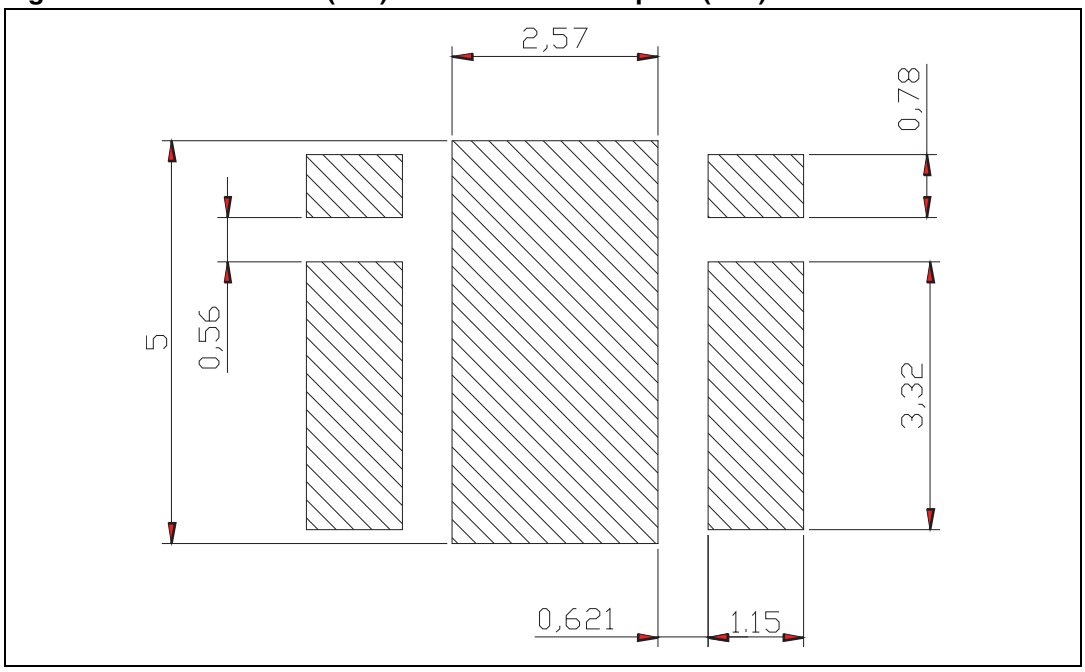

5 Revision history

Table 9. Document revision history

Date	Revision	Changes
05-Jul-2011	1	First release
07-Jul-2011	2	Updated *Figure 1*.
08-Aug-2011	3	Updated *Figure 3: Thermal impedance*. and $R_{thj\text{-}pcb}$ value in *Table 3: Thermal data*. Minor text changes.

Please Read Carefully:

Information in this document is provided solely in connection with ST products. STMicroelectronics NV and its subsidiaries (“ST”) reserve the right to make changes, corrections, modifications or improvements, to this document, and the products and services described herein at any time, without notice.

All ST products are sold pursuant to ST’s terms and conditions of sale.

Purchasers are solely responsible for the choice, selection and use of the ST products and services described herein, and ST assumes no liability whatsoever relating to the choice, selection or use of the ST products and services described herein.

No license, express or implied, by estoppel or otherwise, to any intellectual property rights is granted under this document. If any part of this document refers to any third party products or services it shall not be deemed a license grant by ST for the use of such third party products or services, or any intellectual property contained therein or considered as a warranty covering the use in any manner whatsoever of such third party products or services or any intellectual property contained therein.

UNLESS OTHERWISE SET FORTH IN ST’S TERMS AND CONDITIONS OF SALE ST DISCLAIMS ANY EXPRESS OR IMPLIED WARRANTY WITH RESPECT TO THE USE AND/OR SALE OF ST PRODUCTS INCLUDING WITHOUT LIMITATION IMPLIED WARRANTIES OF MERCHANTABILITY, FITNESS FOR A PARTICULAR PURPOSE (AND THEIR EQUIVALENTS UNDER THE LAWS OF ANY JURISDICTION), OR INFRINGEMENT OF ANY PATENT, COPYRIGHT OR OTHER INTELLECTUAL PROPERTY RIGHT.

UNLESS EXPRESSLY APPROVED IN WRITING BY TWO AUTHORIZED ST REPRESENTATIVES, ST PRODUCTS ARE NOT RECOMMENDED, AUTHORIZED OR WARRANTED FOR USE IN MILITARY, AIR CRAFT, SPACE, LIFE SAVING, OR LIFE SUSTAINING APPLICATIONS, NOR IN PRODUCTS OR SYSTEMS WHERE FAILURE OR MALFUNCTION MAY RESULT IN PERSONAL INJURY, DEATH, OR SEVERE PROPERTY OR ENVIRONMENTAL DAMAGE. ST PRODUCTS WHICH ARE NOT SPECIFIED AS "AUTOMOTIVE GRADE" MAY ONLY BE USED IN AUTOMOTIVE APPLICATIONS AT USER’S OWN RISK.

Resale of ST products with provisions different from the statements and/or technical features set forth in this document shall immediately void any warranty granted by ST for the ST product or service described herein and shall not create or extend in any manner whatsoever, any liability of ST.

ST and the ST logo are trademarks or registered trademarks of ST in various countries.

Information in this document supersedes and replaces all information previously supplied.

The ST logo is a registered trademark of STMicroelectronics. All other names are the property of their respective owners.

© 2011 STMicroelectronics - All rights reserved

STMicroelectronics group of companies

Australia - Belgium - Brazil - Canada - China - Czech Republic - Finland - France - Germany - Hong Kong - India - Israel - Italy - Japan - Malaysia - Malta - Morocco - Philippines - Singapore - Spain - Sweden - Switzerland - United Kingdom - United States of America

www.st.com