STN3PF06

P-CHANNEL 60V - 0.18Ω - 3A SOT-223
STripFET™ II POWER MOSFET

Table 1: General Features

TYPE	V_{DSS}	$R_{DS(on)}$	I_D
STN3PF06	60 V	< 0.20 Ω	2.5 A

- TYPICAL R_{DS}(on) = 0.18 Ω
- EXCEPTIONAL dv/dt CAPABILITY
- 100% AVALANCHE TESTED

DESCRIPTION

This Power MOSFET is the latest development of STMicroelectronis unique "Single Feature Size™" strip-based process. The resulting transistor shows extremely high packing density for low on-resistance, rugged avalanche characteristics and less critical alignment steps therefore a remarkable manufacturing reproducibility

APPLICATIONS

- DC-DC & DC-AC CONVERTERS
- DC MOTOR CONTROL (DISK DRIVES, etc.)

Figure 1:Package

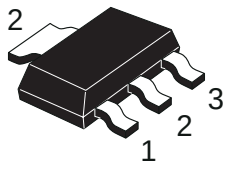

SOT-223

Figure 2: Internal Schematic Diagram

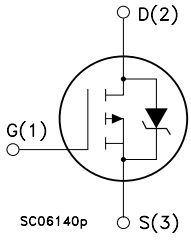

Table 2: Order Codes

SALES TYPE	MARKING	PACKAGE	PACKAGING
STN3PF06	N3PF06	SOT-223	TAPE REEL

Table 3: ABSOLUTE MAXIMUM RATINGS

Symbol	Parameter	Value	Unit
V_{DS}	Drain-source Voltage (V_{GS} = 0)	60	V
V_{DGR}	Drain-gate Voltage (R_{GS} = 20 kΩ)	60	V
V_{GS}	Gate- source Voltage	± 20	V
I_D	Drain Current (continuous) at T_C = 25°C	2.5	A
I_D	Drain Current (continuous) at T_C = 100°C	1.5	A
I_{DM}(•)	Drain Current (pulsed)	10	A
P_{tot}	Total Dissipation at T_C = 25°C	2.5	W
	Derating Factor	0.02	W/°C
dv/dt (1)	Peak Diode Recovery voltage slope	6	V/ns
E_{AS} (2)	Single Pulse Avalanche Energy	558	mJ
T_{stg}	Storage Temperature	-55 to 150	°C
T_j	Max. Operating Junction Temperature		

(•) Pulse width limited by safe operating area.
(1) I_{SD} ≤ 3A, di/dt ≤350A/µs, V_{DD} ≤ $V_{(BR)DSS}$, T_j ≤ T_{JMAX}
(2) Starting T_j = 25 ºC, I_D =3A, V_{DD} = 25V

Note: For the P-CHANNEL MOSFET actual polarity of voltages and current has to be reversed

Table 4: THERMAL DATA

Rthj-pcb	Thermal Resistance Junction-PCB(1 inch^2 copper board)*	38	°C/W
Rthj-pcb	Thermal Resistance Junction-PCB (min. footprint)*	100	°C/W
T_l	Maximum Lead Temperature For Soldering Purpose	260	°C

(*) When Mounted on 1 inch^2 FR-4, 2 Oz copper board

ELECTRICAL CHARACTERISTICS (T_{CASE} = 25 °C UNLESS OTHERWISE SPECIFIED)

Table 5: OFF

Symbol	Parameter	Test Conditions	Min.	Typ.	Max.	Unit
$V_{(BR)DSS}$	Drain-source Breakdown Voltage	I_D = 250 µA, V_{GS} = 0	60			V
I_{DSS}	Zero Gate Voltage Drain Current (V_{GS} = 0)	V_{DS} = Max Rating V_{DS} = Max Rating T_C = 125°C			1 10	µA µA
I_{GSS}	Gate-body Leakage Current (V_{DS} = 0)	V_{GS} = ± 20V			±100	nA

Table 6: ON (5)

Symbol	Parameter	Test Conditions	Min.	Typ.	Max.	Unit
$V_{GS(th)}$	Gate Threshold Voltage	V_{DS} = V_{GS} I_D = 250 µA	2		4	V
$R_{DS(on)}$	Static Drain-source On Resistance	V_{GS} = 10 V I_D = 1.25 A		0.18	0.20	Ω

Table 7: DYNAMIC

Symbol	Parameter	Test Conditions	Min.	Typ.	Max.	Unit
g_{fs} (5)	Forward Transconductance	V_{DS} = 15 V I_D = 1.25 A		1.5		S
C_{iss} C_{oss} C_{rss}	Input Capacitance Output Capacitance Reverse Transfer Capacitance	V_{DS} = 25V f = 1 MHz V_{GS} = 0		850 230 75		pF pF pF

ELECTRICAL CHARACTERISTICS (continued)

Table 8: SWITCHING ON

Symbol	Parameter	Test Conditions	Min.	Typ.	Max.	Unit
$t_{d(on)}$ t_r	Turn-on Delay Time Rise Time	V_{DD} = 30 V I_D = 10 A R_G = 4.7 Ω V_{GS} = 10 V (Resistive Load, Figure)		20 40		ns ns
Q_g Q_{gs} Q_{gd}	Total Gate Charge Gate-Source Charge Gate-Drain Charge	V_{DD}= 48 V I_D= 12 A V_{GS}= 10 V		16 4.0 6.0	21	nC nC nC

Table 9: SWITCHING OFF

Symbol	Parameter	Test Conditions	Min.	Typ.	Max.	Unit
$t_{d(off)}$ t_f	Turn-off Delay Time Fall Time	V_{DD} = 30 V I_D = 6 A R_G = 4.7Ω, V_{GS} = 10 V (Resistive Load, Figure 3)		40 17		ns ns

Table 10: SOURCE DRAIN DIODE

Symbol	Parameter	Test Conditions	Min.	Typ.	Max.	Unit
I_{SD} I_{SDM} (1)	Source-drain Current Source-drain Current (pulsed)				2.5 10	A A
V_{SD} (2)	Forward On Voltage	I_{SD} = 2.5 A V_{GS} = 0			1.2	V
t_{rr} Q_{rr} I_{RRM}	Reverse Recovery Time Reverse Recovery Charge Reverse Recovery Current	I_{SD} = 12 A di/dt = 100A/µs V_{DD} = 30 V T_j = 150°C (see test circuit, Figure 5)		100 260 5.2		ns ∝C A

(1)Pulse width limited by safe operating area.
(2) Pulsed: Pulse duration = 300 µs, duty cycle 1.5 %.

Figure 3: Safe Operating Area

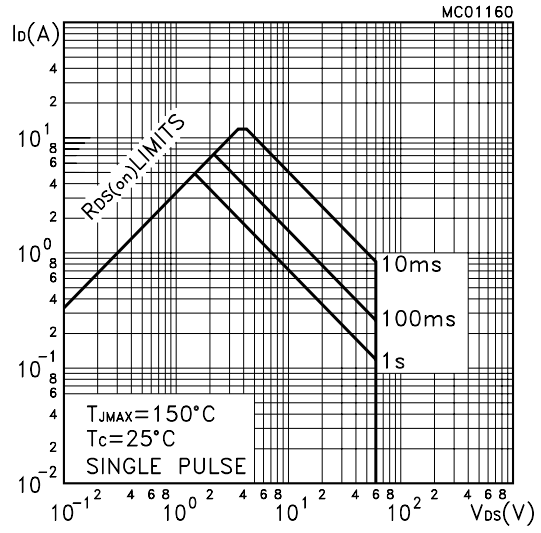

Figure 4: Thermal Impedance

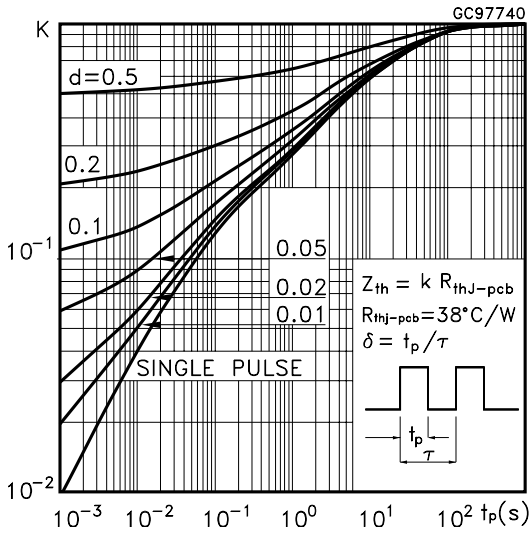

Figure 5: Output Characteristics

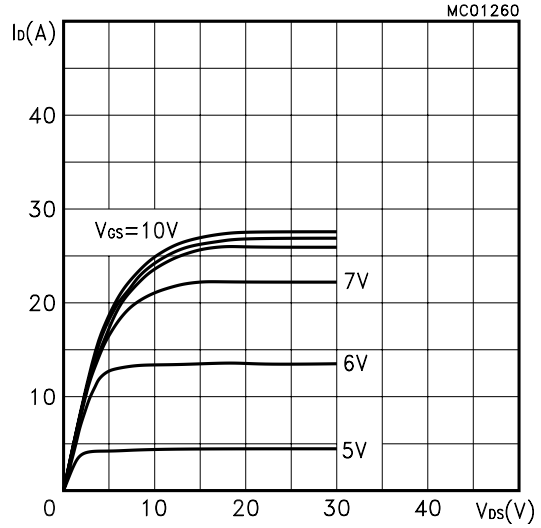

Figure 6: Transfer Characteristics

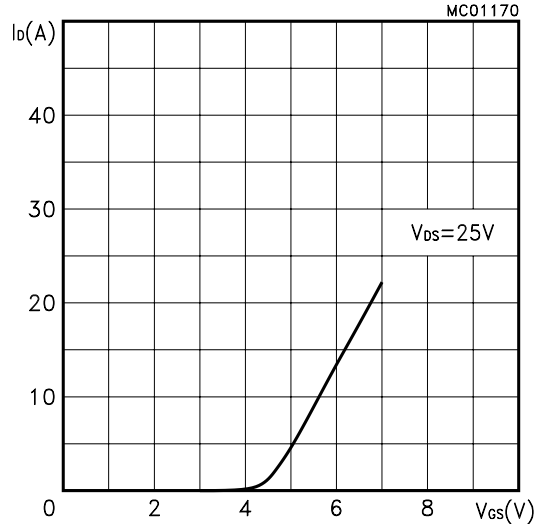

Figure 7: Transconductance

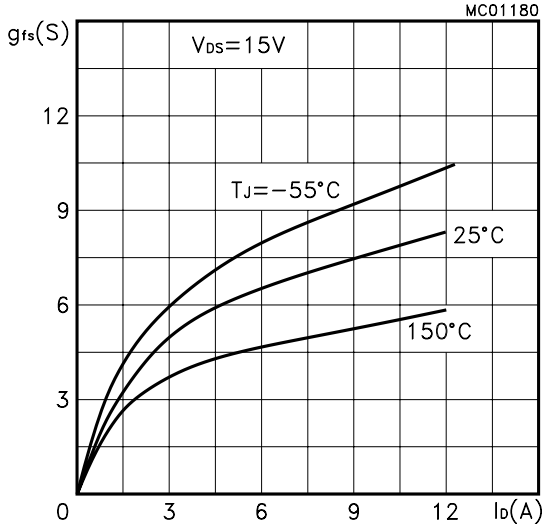

Figure 8: Static Drain-source On Resistance

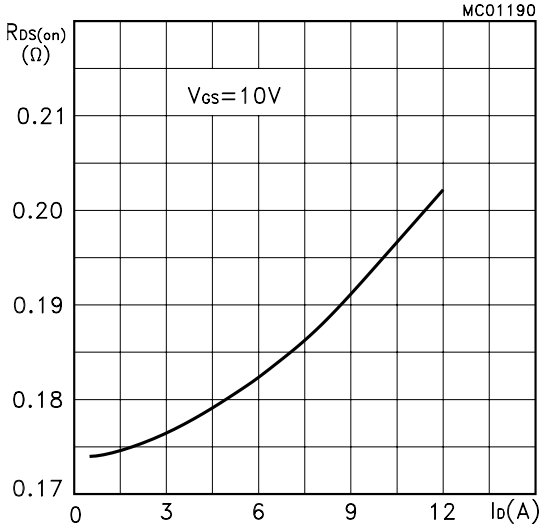

Figure 9: Gate Charge vs Gate-source Voltage

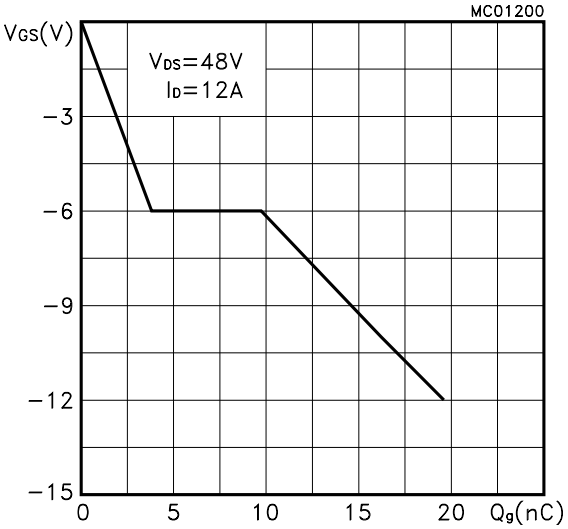

Figure 10: Capacitance Variations

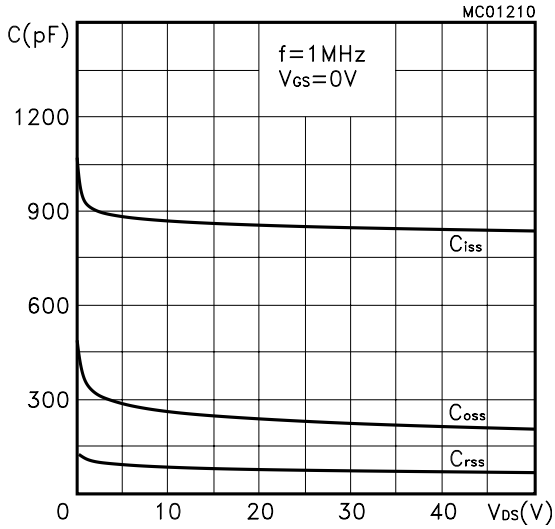

Figure 11: Normalized Gate Threshold Voltage vs Temperature

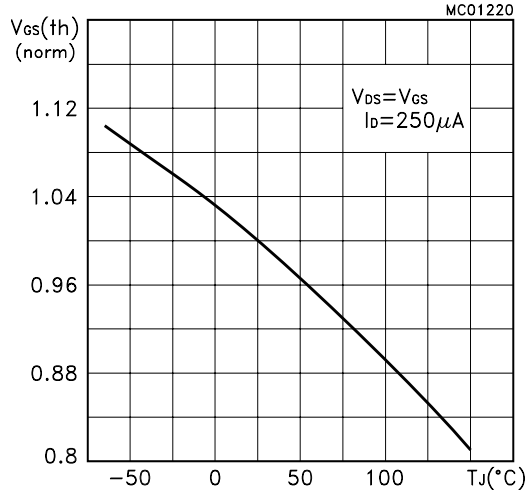

Figure 12: Normalized on Resistance vs Temperature

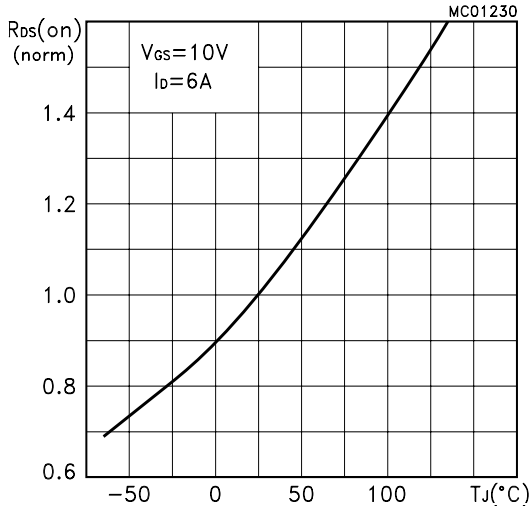

Figure 13: Source-drain Diode Forward Characteristics

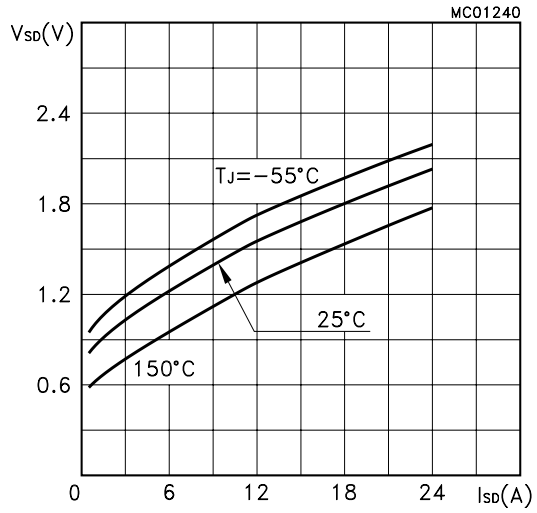

.

Figure 14: Normalized Breakdown Voltage vs Temperature.

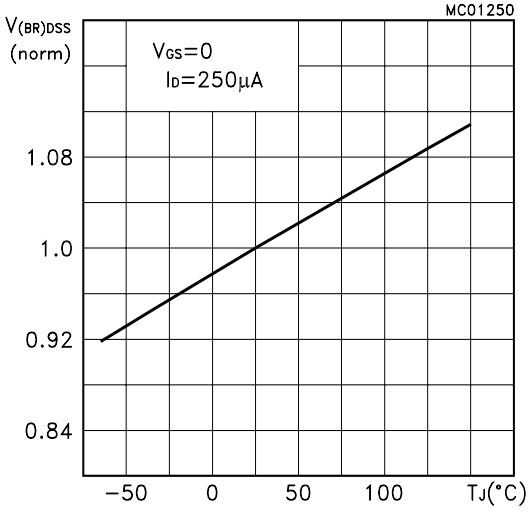

.

Figure 15: Unclamped Inductive Load Test Circuit

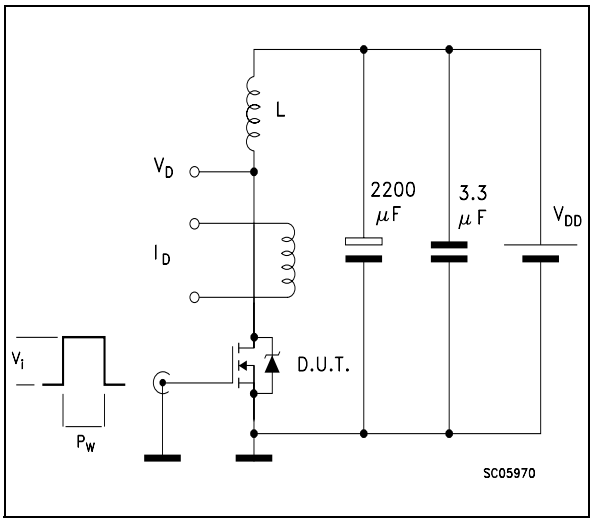

Figure 16: Unclamped Inductive Waveform

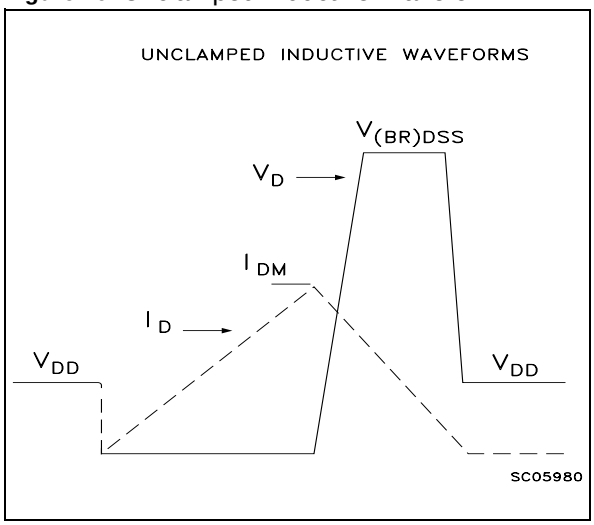

Figure 17: Switching Times Test Circuits For Resistive Load

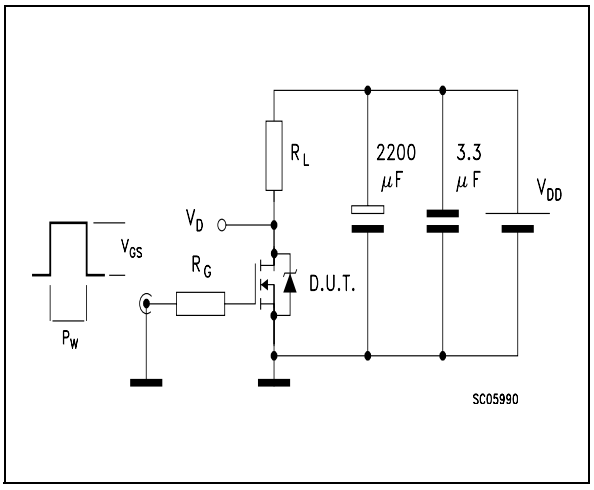

Figure 18: Gate Charge test Circuit

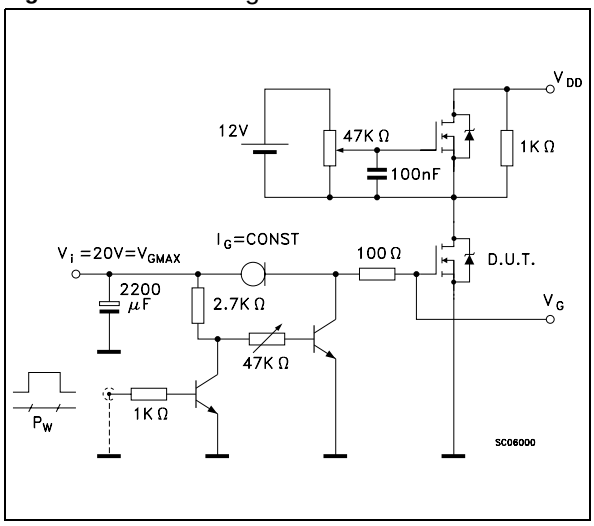

Figure 19: Test Circuit For Inductive Load Switching And Diode Recovery Times

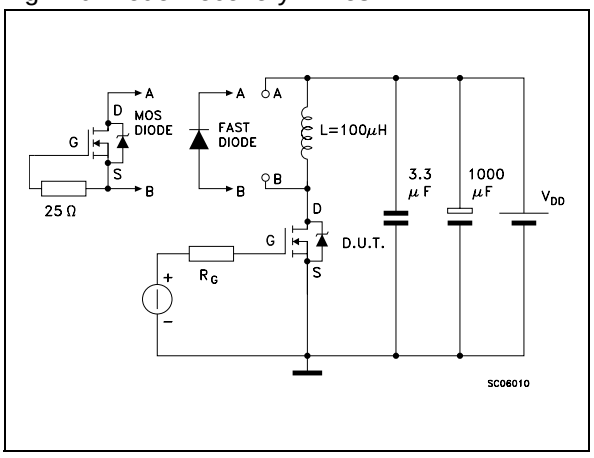

SOT-223 MECHANICAL DATA

DIM.	mm			inch		
	MIN.	TYP.	MAX.	MIN.	TYP.	MAX.
A			1.80			0.071
B	0.60	0.70	0.80	0.024	0.027	0.031
B1	2.90	3.00	3.10	0.114	0.118	0.122
c	0.24	0.26	0.32	0.009	0.010	0.013
D	6.30	6.50	6.70	0.248	0.256	0.264
e		2.30			0.090	
e1		4.60			0.181	
E	3.30	3.50	3.70	0.130	0.138	0.146
H	6.70	7.00	7.30	0.264	0.276	0.287
V			10°			10°
A1		0.02				

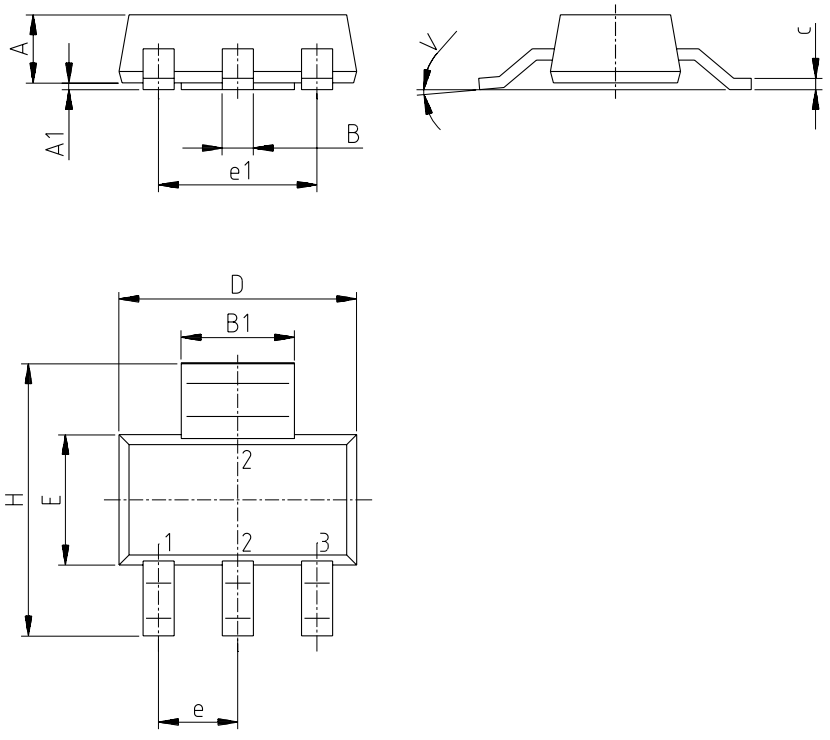

P008B

Table 11:Revision History

Date	Revision	Description of Changes
Tuesday 18 January 2005	2.0	ADDED CURVES

Information furnished is believed to be accurate and reliable. However, STMicroelectronics assumes no responsibility for the consequences of use of such information nor for any infringement of patents or other rights of third parties which may result from its use. No license is granted by implication or otherwise under any patent or patent rights of STMicroelectronics. Specifications mentioned in this publication are subject to change without notice. This publication supersedes and replaces all information previously supplied. STMicroelectronics products are not authorized for use as critical components in life support devices or systems without express written approval of STMicroelectronics.

The ST logo is registered trademark of STMicroelectronics
All other names are the property of their respective owners.

© 2005 STMicroelectronics - All Rights Reserved

STMicroelectronics group of companies
Australia - Belgium - Brazil - Canada - China - Czech Republic - Finland - France - Germany - Hong Kong - India - Israel - Italy - Japan - Malaysia - Malta - Morocco -Singapore - Spain - Sweden - Switzerland - United Kingdom - United States of America.
www.st.com