STP60NE06-16
STP60NE06-16FP

N-CHANNEL 60V - 0.013 Ω - 60A TO-220/TO-220FP "SINGLE FEATURE SIZE™" POWER MOSFET

Table 1. General Features

Type	V_{DSS}	$R_{DS(on)}$	I_D
STP60NE06-16	60 V	< 0.016 Ω	60 A
STP60NE06-16FP	60 V	< 0.016 Ω	35 A

Figure 1. Package

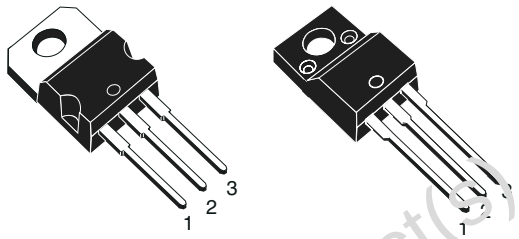

FEATURES SUMMARY

- TYPICAL $R_{DS(on)}$ = 0.013 Ω
- EXCEPTIONAL dv/dt CAPABILITY
- 100% AVALANCHE TESTED
- LOW GATE CHARGE 100°C
- HIGH dv/dt CAPABILITY
- APPLICATION ORIENTED CHARACTERIZATION

Figure 2. Internal Schematic Diagram

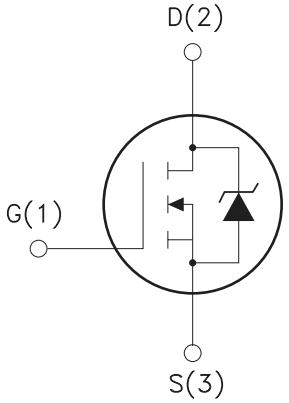

DESCRIPTION

This Power Mosfet is the latest development of STMicroelectronics unique "Single Feature Size" strip-based process. The resulting transistor shows extremely high packing density for low on-resistance,rugged avalance characteristics and less critical alignment steps therefore a remarkable manufacturing reproducibility.

APPLICATIONS

- DC MOTOR CONTROL
- DC-DC & DC-AC CONVERTERS
- SYNCHRONOUS RECTIFICATION

Obsolete Product(s) - Obsolete Product(s)

Table 2. Order Codes

Part Number	Marking	Package	Packaging
STP60NE06-16	P60NE06	TO-220	TUBE
STP60NE06-16FP	P60NE06FP	TO-220FP	TUBE

Table 3. Absolute Maximum Ratings

Symbol	Parameter	Value		Unit
		STP60NE06-16	STP60NE06-16FP	
V_{DS}	Drain-source Voltage (V_{GS} = 0)	60		V
V_{DGR}	Drain- gate Voltage (R_{GS} = 20 kΩ)	60		V
V_{GS}	Gate-source Voltage	± 20		V
I_D	Drain Current (cont.) at T_C = 25 °C	60	35	A
I_D	Drain Current (cont.) at T_C = 100 °C	42	24	A
I_{DM} (1)	Drain Current (pulsed)	240	240	A
P_{tot}	Total Dissipation at T_C = 25 °C	150	40	W
	Derating Factor	1	0.3	W°/C
V_{ISO}	Insulation Withstand Voltage (DC)	–	2000	V
dv/dt (2)	Peak Diode Recovery voltage slope	6		V/ns
T_{stg}	Storage Temperature	-65 to 175		°C
T_j	Max. Operating Junction Temperature	175		°C

Note: 1. Pulse width limited by safe operating area
2. $I_{SD} \leq 60A$, di/dt ≤ 300 A/µs, $V_{DD} \leq V_{(BR)DSS}$, $T_j \leq T_{JMAX}$

Table 4. Thermal Data

Symbol	Parameter	Value		Unit
		TO-220	TO220-FP	
$R_{thj\text{-}case}$	Thermal Resistance Junction-case Max	1	3.75	°C/W
$R_{thj\text{-}amb}$	Thermal Resistance Junction-ambient Max	62.5		°C/W
T_l	Maximum Lead Temperature For Soldering Purpose	300		°C

Table 5. Avalanche Characteristics

Symbol	Parameter	Max Value	Unit
I_{AR}	Avalanche Current, Repetitive or Not-Repetitive (pulse width limited by T_j max, δ < 1%)	60	A
E_{AS}	Single Pulse Avalanche Energy (starting T_j = 25 °C; $I_D = I_{AR}$; V_{DD} = 25 V)	350	mJ

Obsolete Product(s) - Obsolete Product(s)

ELECTRICAL CHARACTERISTICS (T_{case} = 25°C unless otherwise specified)

Table 6. Off

Symbol	Parameter	Test Conditions	Min.	Typ.	Max.	Unit
$V_{(BR)DSS}$	Drain-source Breakdown Voltage	I_D = 250 µA V_{GS} = 0	60			V
I_{DSS}	Zero Gate Voltage	V_{DS} = Max Rating			1	µA
	Drain Current (V_{GS} = 0)	V_{DS} = Max Rating Tc = 125 °C			10	µA
I_{GSS}	Gate-body Leakage Current (V_{DS} = 0)	V_{GS} = ± 20 V			± 100	nA

Table 7. On (1)

Symbol	Parameter	Test Conditions	Min.	Typ.	Max.	Unit
$V_{GS(th)}$	Gate Threshold Voltage	V_{DS} = V_{GS}; I_D = 250 µA	2	3	4	V
$R_{DS(on)}$	Static Drain-source On Resistance	V_{GS} = 10V; I_D = 30 A		0.013	0.016	Ω

Note: 1. Pulsed: Pulse duration = 300 µs, duty cycle 1.5 %

Table 8. Dynamic

Symbol	Parameter	Test Conditions	Min.	Typ.	Max.	Unit
g_{fs} (1	Forward Transconductance	V_{DS} > $I_{D(on)}$ x $R_{DS(on)max}$; I_D = 30 A	20	35		S
C_{iss}	Input Capacitance	V_{DS} = 25 V; f = 1 MHz; V_{GS} = 0		4600	6200	pF
C_{oss}	Output Capacitance			580	800	pF
C_{rss}	Reverse Transfer Capacitance			140	200	pF

Note: 1. Pulsed: Pulse duration = 300 µs, duty cycle 1.5 %

Table 9. Switching On

Symbol	Parameter	Test Conditions	Min.	Typ.	Max.	Unit
td(on)	Turn-on Time	V_{DD} = 30 V; I_D = 30 A		40	60	ns
tr	Rise Time	R_G = 4.7 Ω; V_{GS} = 10 V		125	180	ns
Q_g	Total Gate Charge	V_{DD} = 48 V; I_D = 60 A; V_{GS} = 10 V		115	160	nC
Q_{gs}	Gate-Source Charge			25		nC
Q_{gd}	Gate-Drain Charge			40		nC

Table 10. Switching Off

Symbol	Parameter	Test Conditions	Min.	Typ.	Max.	Unit
$t_{r(Voff)}$	Off-voltage Rise Time	V_{DD} = 48 V; I_D = 60 A		15	25	ns
t_f	Fall Time	R_G = 4.7 Ω; V_{GS} = 10 V		150	210	ns
t_c	Cross-over Time			180	260	ns

Obsolete Product(s) - Obsolete Product(s)

Table 11. Source Drain Diode

Symbol	Parameter	Test Conditions	Min.	Typ.	Max.	Unit
I_{SD}	Source-drain Current				60	A
I_{SDM} (1)	Source-drain Current (pulsed)				240	A
V_{SD} (2)	Forward On Voltage	I_{SD} = 60 A; V_{GS} = 0			1.5	V
t_{rr}	Reverse Recovery Time	I_{SD} = 60 A; di/dt = 100 A/µs		100		ns
Q_{rr}	Reverse RecoveryCharge	V_{DD} = 30 V; T_j = 150 °C		0.4		µC
I_{RRAM}	Reverse RecoveryCharge			8		A

Note: 1. Pulse width limited by safe operating area
2. Pulsed: Pulse duration = 300 µs, duty cycle 1.5 %

Figure 3. Safe Operating Area for TO-220

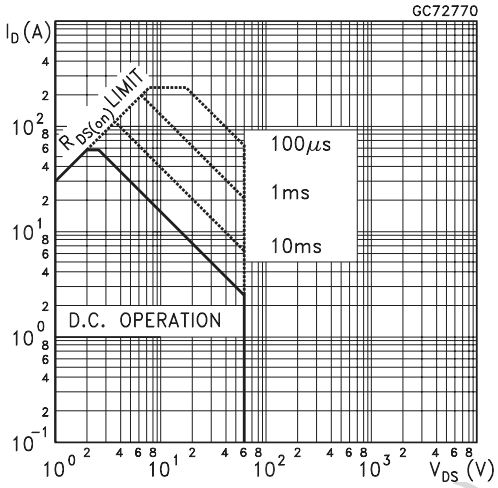

Figure 4. Safe Operating Area for TO-220FP

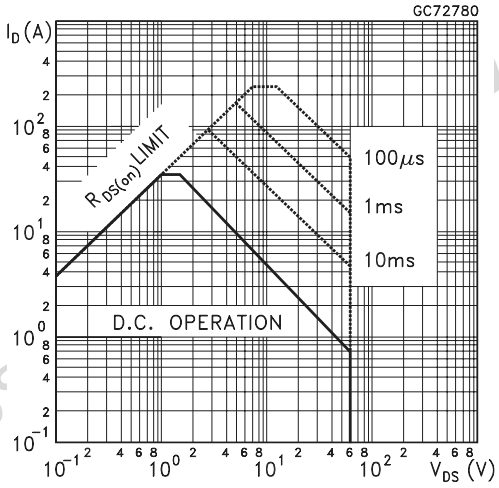

Figure 5. Thermal Impedance for TO-220

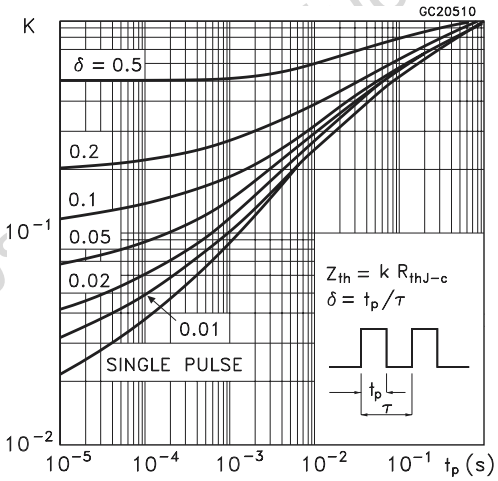

Figure 6. Thermal Impedance for TO-220FP

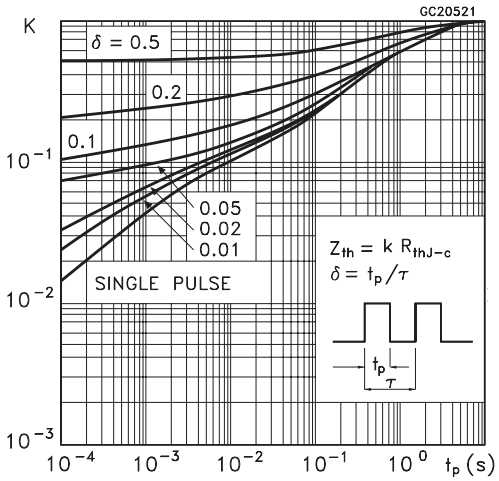

Figure 7. Output Characteristics

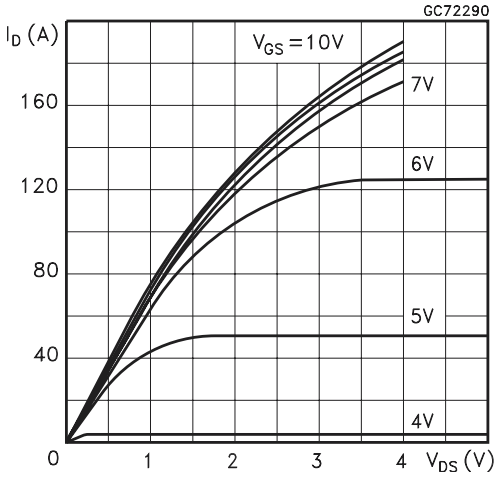

Figure 8. Transfer Characteristics

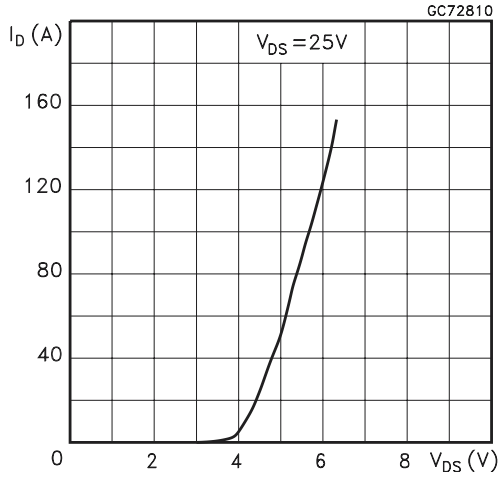

Figure 9. Transconductance

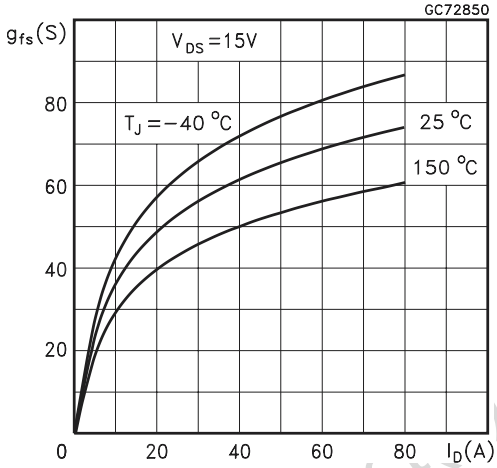

Figure 10. Static Drain-source On Resistance

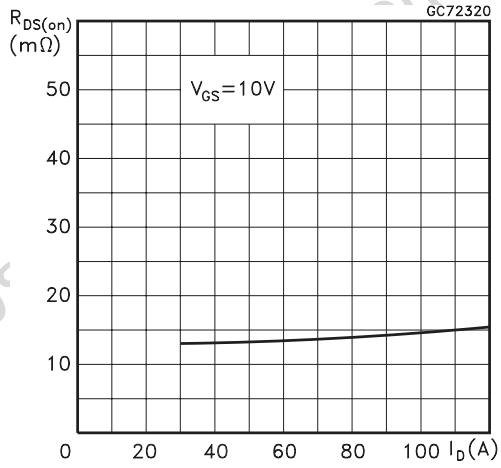

Figure 11. Gate Charge vs Gate-source Voltage

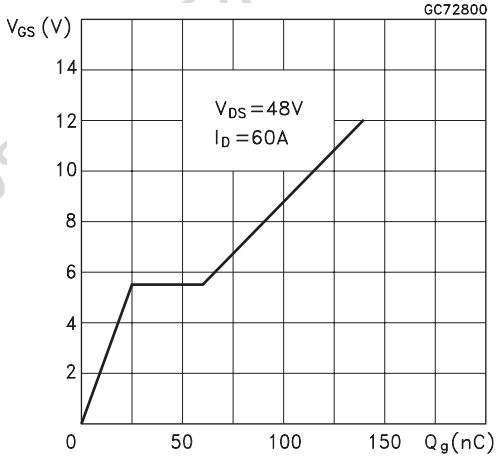

Figure 12. Capacitance Variations

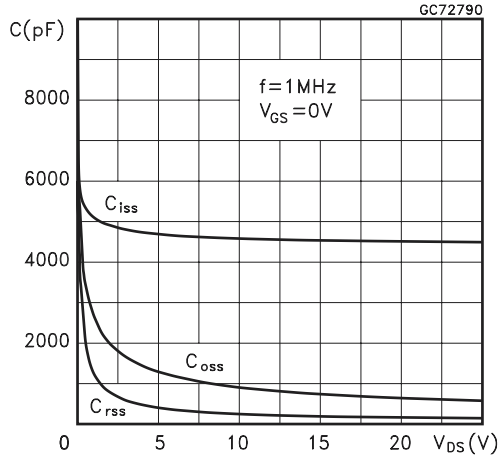

Obsolete Product(s) - Obs

Figure 13. Normalized Gate Thresold Voltage vs Temperature

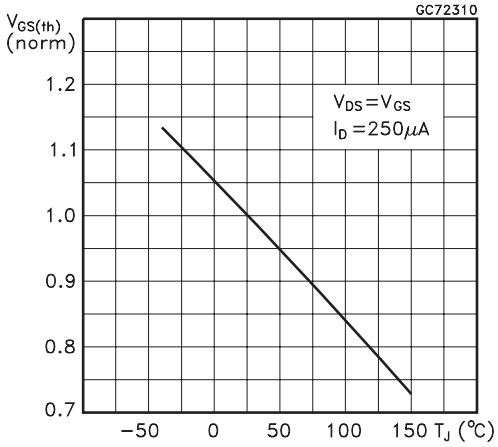

Figure 14. Normalized On Resistance vs Temperature

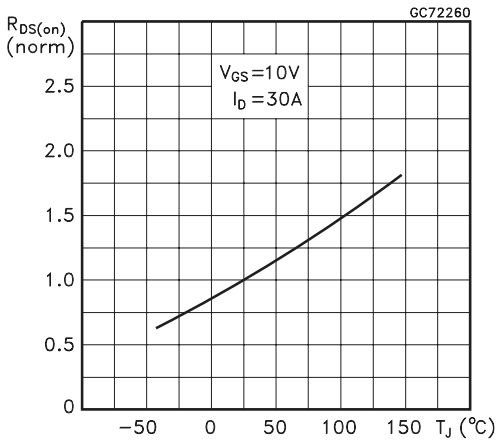

Figure 15. Source-drain Diode Forward Characteristics

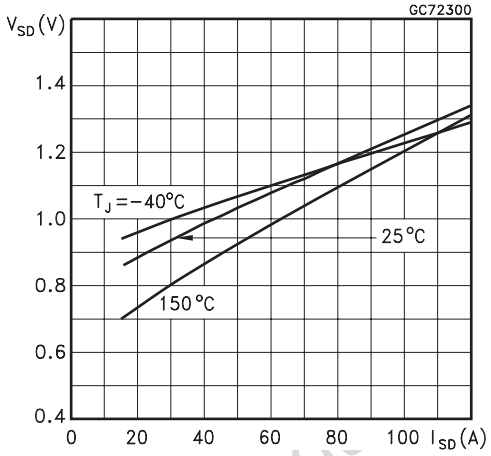

Obsolete Product(s) - Obsolete Product(s)

Figure 16. Unclamped Inductive Load Test Circuit

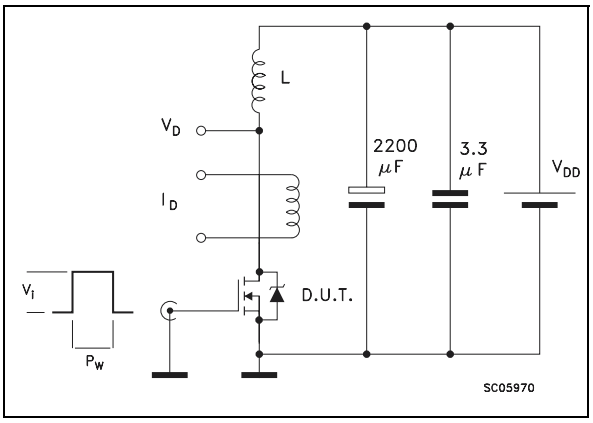

Figure 17. Unclamped Inductive Waveforms

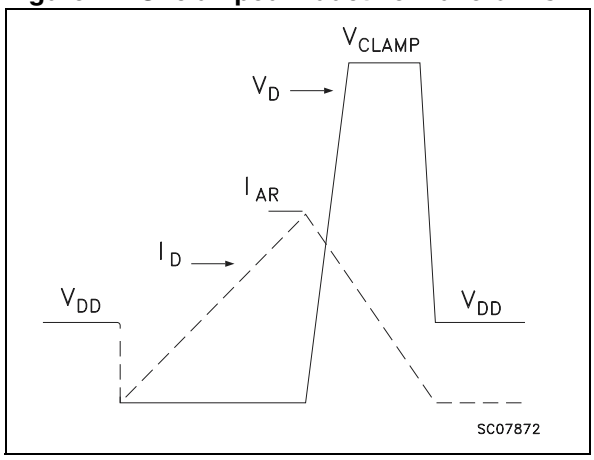

Figure 18. Switching Times Test Circuits For Resistive Load

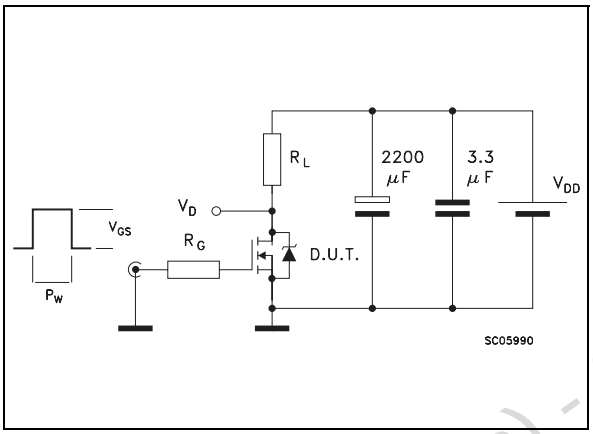

Figure 19. Gate Charge Test Circuit

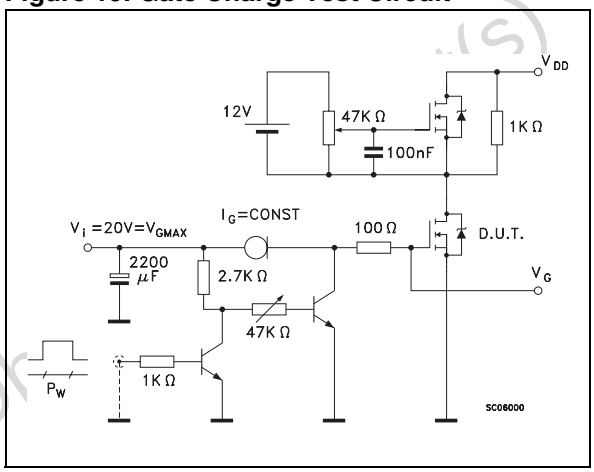

Figure 20. Test Circuit For Inductive Load Switching And Diode Recovery Times

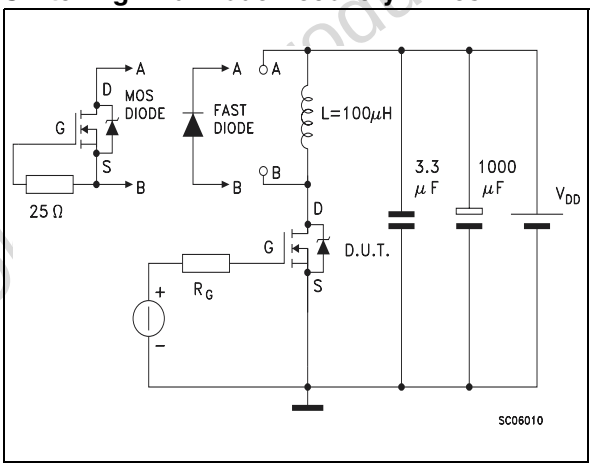

Obsolete Product(s) - Obsolete Product(s)

PACKAGE MECHANICAL

Table 12. TO-220 Mechanical Data

Symbol	millimeters			inches		
	Min	Typ	Max	Min	Typ	Max
A	4.40		4.60	0.173		0.181
b	0.61		0.88	0.024		0.034
b1	1.15		1.70	0.045		0.066
c	0.49		0.70	0.019		0.027
D	15.25		15.75	0.60		0.620
E	10		10.40	0.393		0.409
e	2.40		2.70	0.094		0.106
e1	4.95		5.15	0.194		0.202
F	1.23		1.32	0.048		0.052
H1	6.20		6.60	0.244		0.256
J1	2.40		2.72	0.094		0.107
L	13		14	0.511		0.551
L1	3.50		3.93	0.137		0.154
L20		16.40			0.645	
L30		28.90			1.137	
ØP	3.75		3.85	0.147		0.151
Q	2.65		2.95	0.104		0.116

Figure 21. TO-220 Package Dimensions

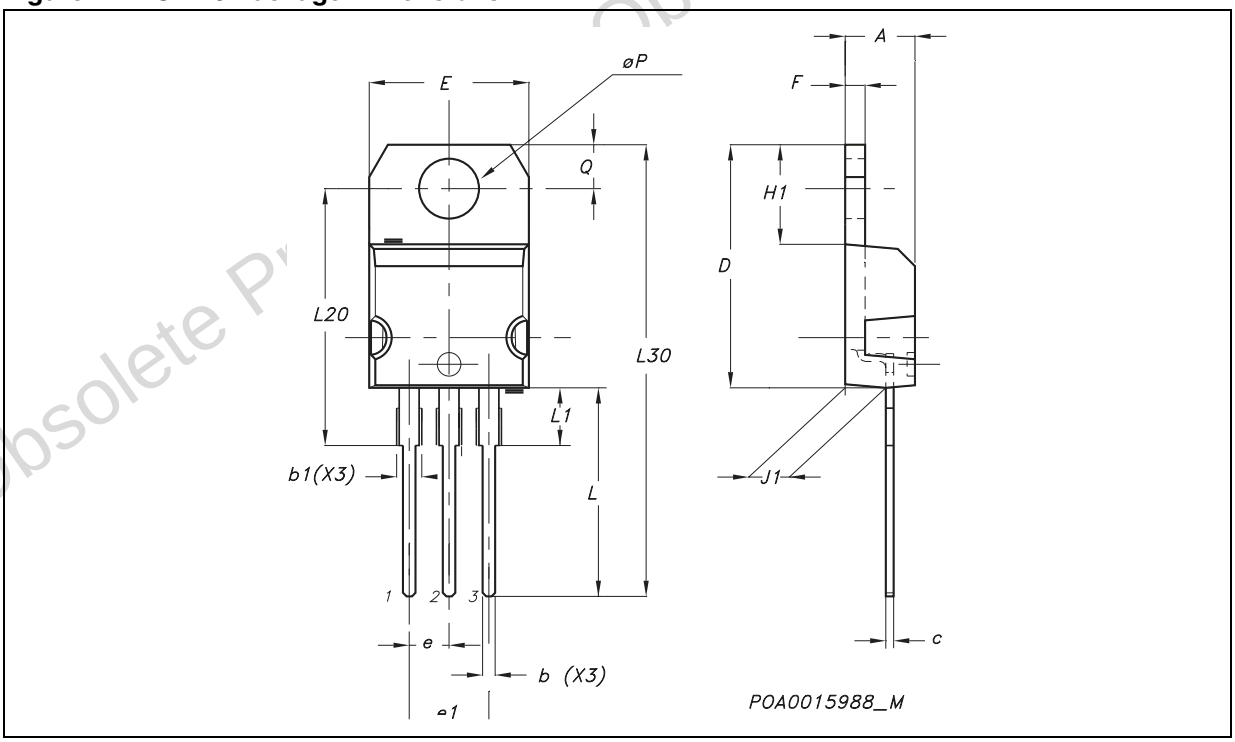

Note: Drawing is not to scale.

Obsolete Product(s)

Table 13. TO-220FP Mechanical Data

Symbol	millimeters			inches		
	Min	Typ	Max	Min	Typ	Max
A	4.40		4.60	0.173		0.181
B	2.50		2.70	0.098		0.106
C	1.00		1.30	0.039		0.051
D	2.50		2.75	0.098		0.108
E	0.40		0.70	0.016		0.027
F	0.75		1.00	0.030		0.039
F1	1.15		1.70	0.045		0.066
F2	1.15		1.70	0.045		0.066
G	4.95		5.20	0.195		0.204
G1	2.40		2.70	0.094		0.106
H	10.00		10.40	0.393		0.409
L2		16.00			0.630	
L3	28.60		30.60	1.126		1.204
L4	9.80		10.60	0.385		0.417
L5	3.30		3.50	0.129		0.137
L6	15.90		16.40	0.626		0.645
L7	9.00		9.30	0.354		0.366
P			1.60			0.063
V		5°			5°	
V1	50°		100°	50°		100°
V2	44°		46°	44°		46°
Ø	3.00		3.20	0.118		0.126

Figure 22. TO-220FP Package Dimensions

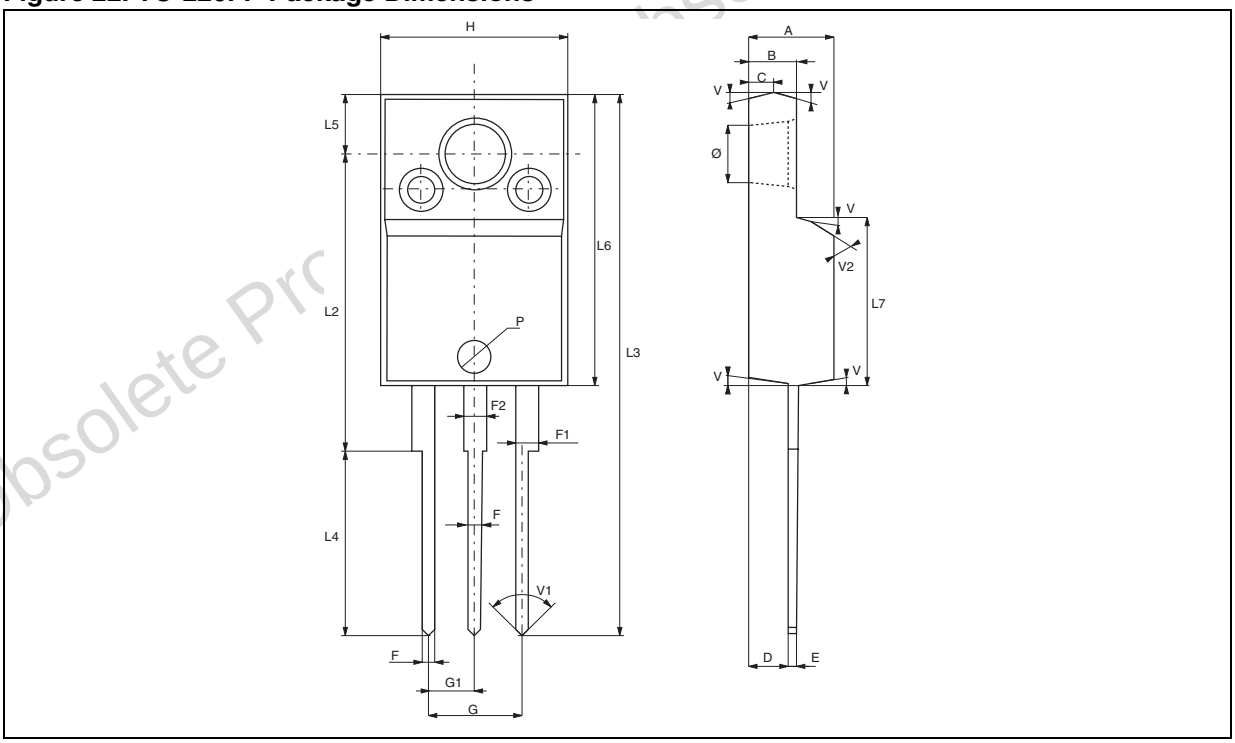

Note: Drawing is not to scale.

Obsolete Prc
bsolete Product(s)

REVISION HISTORY

Table 14. Revision History

Date	Revision	Description of Changes
December-1997	1	First Issue
14-Apr-2004	2	Stylesheet update. No content change.

Obsolete Product(s) - Obsolete Product(s)

Obsolete Product(s) - Obsolete Product(s)

Information furnished is believed to be accurate and reliable. However, STMicroelectronics assumes no responsibility for the consequences of use of such information nor for any infringement of patents or other rights of third parties which may result from its use. No license is granted by implication or otherwise under any patent or patent rights of STMicroelectronics. Specifications mentioned in this publication are subject to change without notice. This publication supersedes and replaces all information previously supplied. STMicroelectronics products are not authorized for use as critical components in life support devices or systems without express written approval of STMicroelectronics.

The ST logo is a registered trademark of STMicroelectronics.

All other names are the property of their respective owners

© 2004 STMicroelectronics - All rights reserved

STMicroelectronics GROUP OF COMPANIES

Australia - Belgium - Brazil - Canada - China - Czech Republic - Finland - France - Germany - Hong Kong - India - Israel - Italy - Japan - Malaysia - Malta - Morocco - Singapore - Spain - Sweden - Switzerland - United Kingdom - United States

www.st.com