STP60NH2LL

N-channel 24V - 0.010Ω - 40A TO-220 STripFET™ Power MOSFET

General features

Type	V_{DSS} (@Tjmax)	$R_{DS(on)}$	I_D
STP60NH2LL	24V	<0.011Ω	40A(1)

1. Value limited by wire bonding

- $R_{DS(ON)}$ * Qg industry's benchmark
- Conduction losses reduced
- Switching losses reduced
- Low threshold device

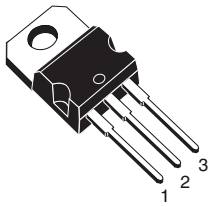

TO-220

Description

The STP60NH2LL utilizes the latest advanced design rules of ST's proprietary STripFET™ technology. This is suitable for the most demanding DC-DC converter application where high efficiency is to be achieved.

Internal schematic diagram

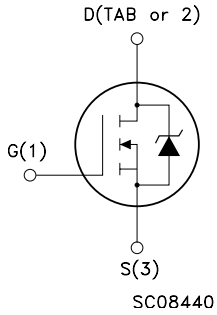

Applications

- Switching application

Obsolete Product(s) - Obsolete Product(s)

Order codes

Part number	Marking	Package	Packaging
STP60NH2LL	P60NH2LL	TO-220	Tube

Contents

1 Electrical ratings 3

2 Electrical characteristics 4

2.1 Electrical characteristics (curves) 6

3 Test circuit 8

4 Appendix A 9

5 Package mechanical data 11

6 Revision history 13

Obsolete Product(s) - Obsolete Product(s)

1 Electrical ratings

Table 1. Absolute maximum ratings

Symbol	Parameter	Value	Unit
V_{spike} (1)	Drain-source Voltage Rating	30	V
V_{DS}	Drain-source voltage (V_{GS} = 0)	24	V
V_{GS}	Gate-source voltage	±18	V
I_D	Drain current (continuous) at T_C = 25°C	40	A
I_D	Drain current (continuous) at T_C=100°C	28	A
I_{DM} (2)	Drain current (pulsed)	160	A
P_{TOT}	Total dissipation at T_C = 25°C	60	W
	Derating factor	0.4	W/°C
E_{AS} (3)	Single pulse avalanche energy	600	mJ
T_{stg}	Storage temperature	-55 to 175	°C
T_j	Max. operating junction temperature		

1. Guaranteed when external Rg=4.7 Ω and $t_f < t_{fmax}$
2. Pulse width limited by safe operating area
3. Starting T_j = 25 °C, I_D = 20A, V_{DD} = 15V

Table 2. Thermal data

$R_{thj\text{-}case}$	Thermal resistance junction-case Max	2.5	°C/W
$R_{thj\text{-}a}$	Thermal resistance junction-ambient Max	100	°C/W
T_l	Maximum lead temperature for soldering purpose	275	°C

Obsolete Product(s) - Obsolete Product(s)

2 Electrical characteristics

(T_{CASE}=25°C unless otherwise specified)

Table 3. On/off states

Symbol	Parameter	Test conditions	Min.	Typ.	Max.	Unit
$V_{(BR)DSS}$	Drain-source breakdown voltage	I_D = 25 mA, V_{GS}= 0	24			V
I_{DSS}	Zero gate voltage drain current (V_{GS} = 0)	V_{DS} = Max rating, V_{DS} = Max rating T_C=125°C			1 10	µA µA
I_{GSS}	Gate body leakage current (V_{DS} = 0)	V_{GS} = ±16V			± 100	nA
$V_{GS(th)}$	Gate threshold voltage	V_{DS}= V_{GS}, I_D = 250µA	1			V
$R_{DS(on)}$	Static drain-source on resistance	V_{GS}= 10V, I_D= 20A V_{GS}= 4.5V, I_D= 20A		0.010 0.012	0.011 0.0135	Ω

Table 4. Dynamic

Symbol	Parameter	Test conditions	Min.	Typ.	Max.	Unit
g_{fs} (1)	Forward transconductance	V_{DS} = 10V, I_D = 10A		18		S
C_{iss} C_{oss} C_{rss}	Input capacitance Output capacitance Reverse transfer capacitance	V_{DS} =25V, f=1 MHz, V_{GS}=0		990 385 40		pF pF pF
$t_{d(on)}$ t_r $t_{d(off)}$ t_f	Turn-on delay time rise time Turn-off delay time fall time	V_{DD} = 10 V, I_D = 20 A R_G = 4.7 Ω, V_{GS} = 4.5 V (see Figure 13)		5 56 13 10		ns ns ns ns
Q_g Q_{gs} Q_{gd}	Total gate charge Gate-source charge Gate-drain charge	0.44 ≤V_{DD}=10V, I_D = 40A V_{GS} =4.5V		8.7 4.2 2.4	27	nC nC nC
Q_{oss} (2)	Output charge	V_{DS}= 16 V, V_{GS}= 0 V		7.6		nC
R_g	Gate input resistance	f=1MHz Gate DC Bias=0 test signal level=20mV open drain		1.3		Ω

1. Pulsed: pulse duration=300µs, duty cycle 1.5%
2. Qoss = Coss*Δ Vin , Coss = Cgd + Cds . See *Chapter 4: Appendix A*

Obsolete Product(s) - Obsolete Product(s)

Table 5. Source drain diode

Symbol	Parameter	Test conditions	Min.	Typ.	Max	Unit
I_{SD}	Source-drain current				40	A
I_{SDM}	Source-drain current (pulsed)				160	A
V_{SD} (1)	Forward on voltage	I_{SD}=20A, V_{GS}=0			1.3	V
t_{rr} Q_{rr} I_{RRM}	Reverse recovery time Reverse recovery charge Reverse recovery current	I_{SD}=40A, di/dt = 100A/µs, V_{DD}=15V, Tj=150°C (see Figure 15)		32.5 28 1.7		ns µC A

1. Pulsed: pulse duration=300µs, duty cycle 1.5%

Obsolete Product(s) - Obsolete Product(s)

2.1 Electrical characteristics (curves)

Figure 1. Safe operating area

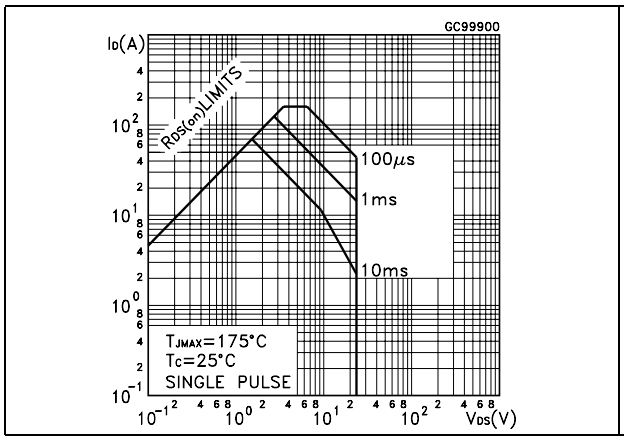

Figure 2. Thermal impedance

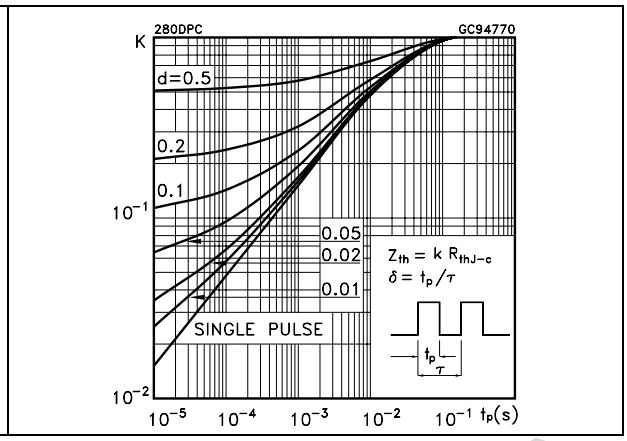

Figure 3. Output characteristics

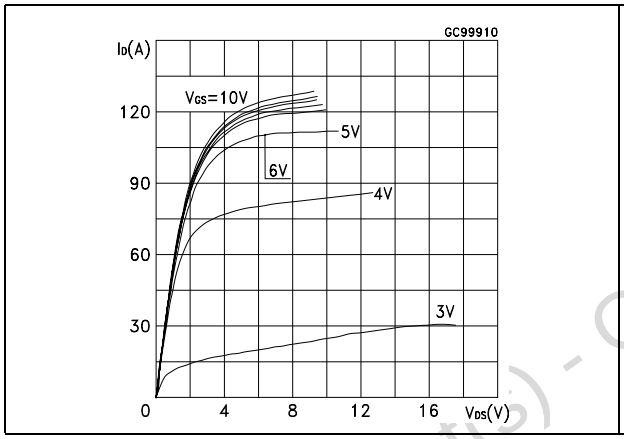

Figure 4. Transfer characteristics

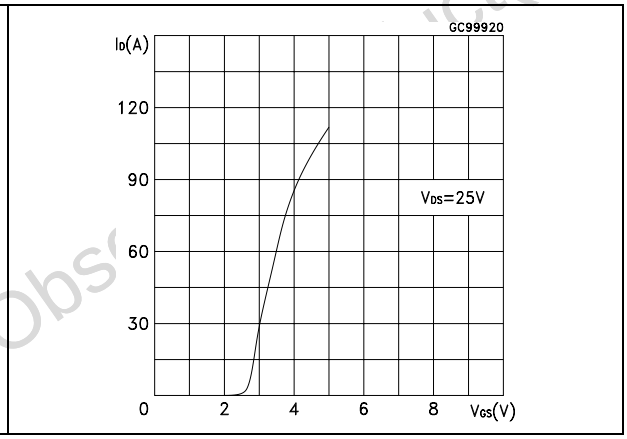

Figure 5. Transconductance

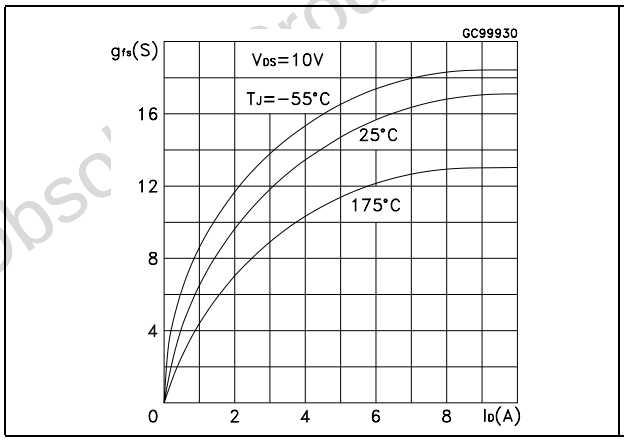

Figure 6. Static drain-source on resistance

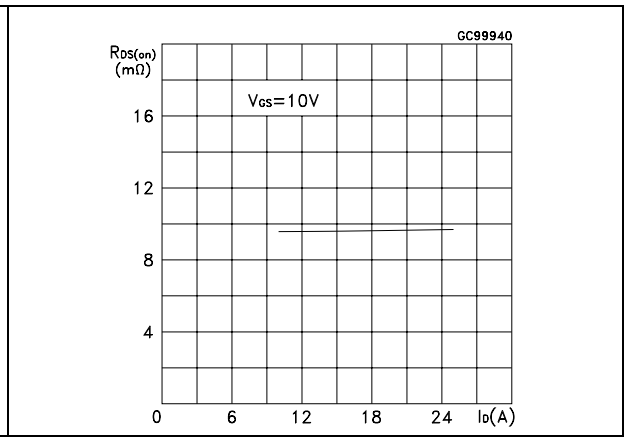

Obsolete Product(s) - Obsolete Product(s)

Figure 7. Gate charge vs. gate-source voltage

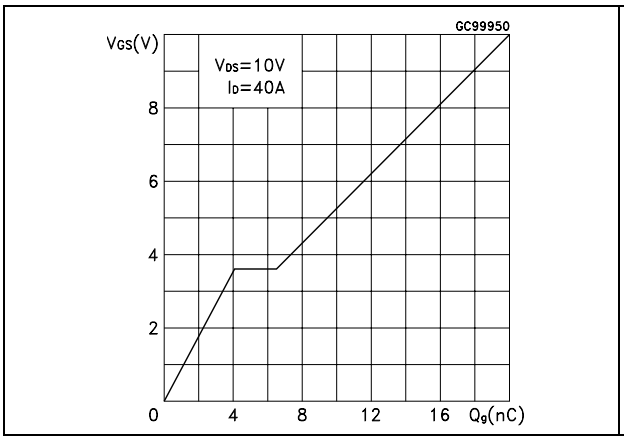

Figure 8. Capacitance variations

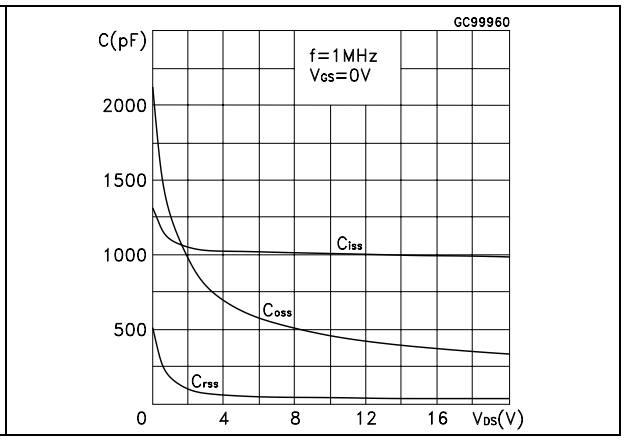

Figure 9. Normalized gate threshold voltage vs. temperature

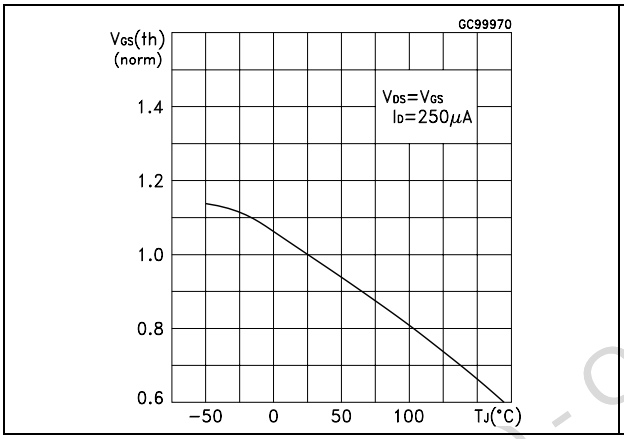

Figure 10. Normalized on resistance vs. temperature

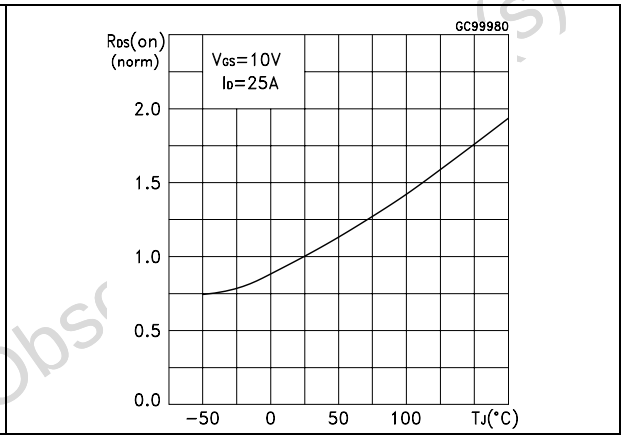

Figure 11. Source-drain diode forward characteristics

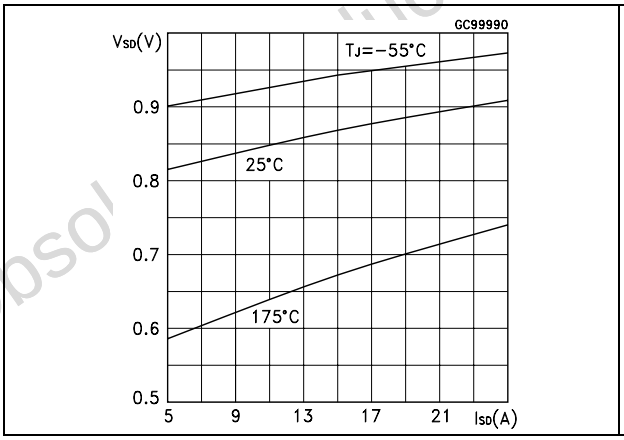

Figure 12. Normalized Breakdown Voltage vs. Temperature

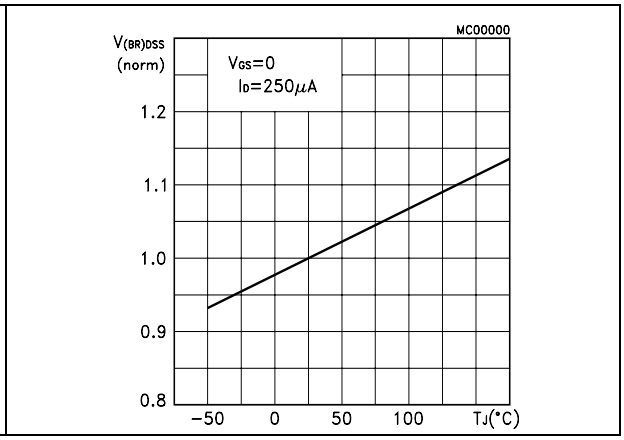

Obsolete Product(s) - Obsolete Product(s)

3 Test circuit

Figure 13. Switching times test circuit for resistive load

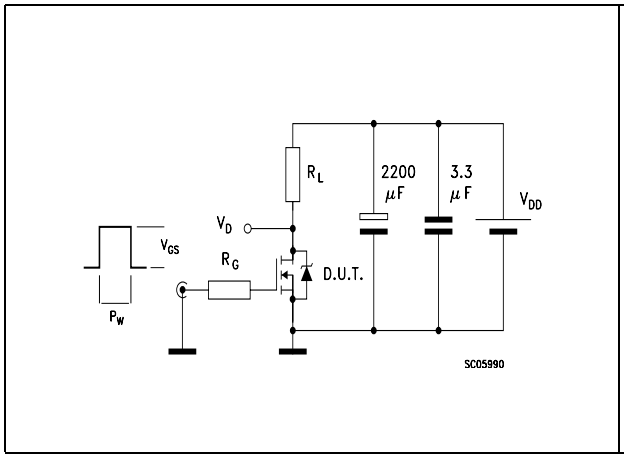

Figure 14. Gate charge test circuit

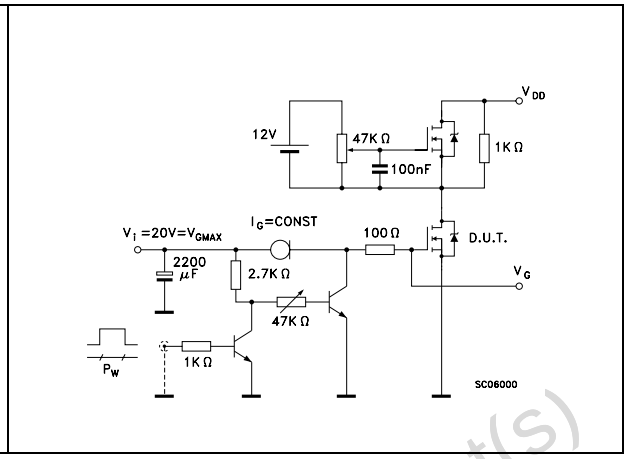

Figure 15. Test circuit for inductive load switching and diode recovery times

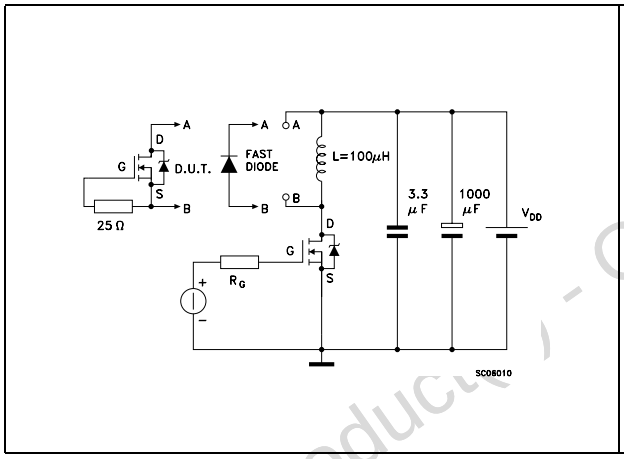

Figure 16. Unclamped Inductive load test circuit

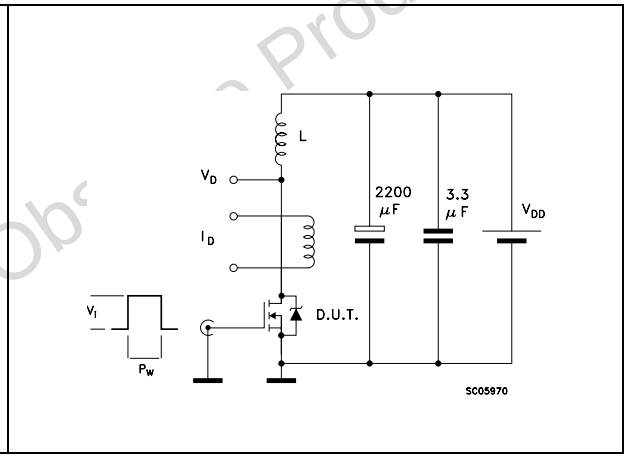

Figure 17. Unclamped inductive waveform

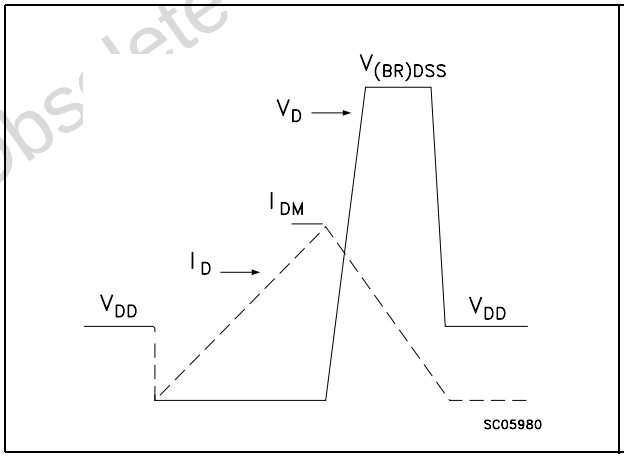

Figure 18. Switching time waveform

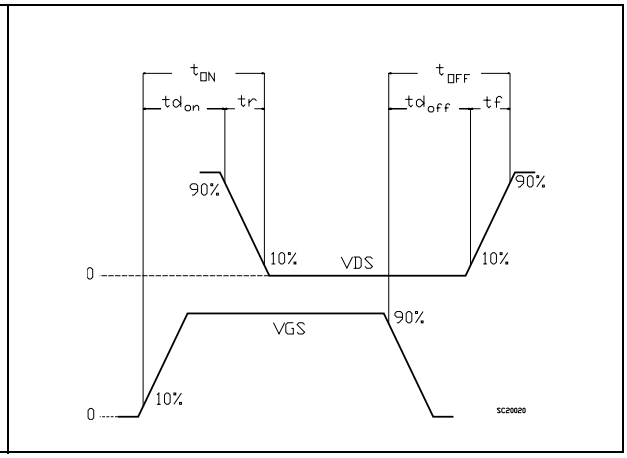

Obsolete Product(s) - Obs Product(s)

4 Appendix A

Figure 19. Buck converter: power losses estimation

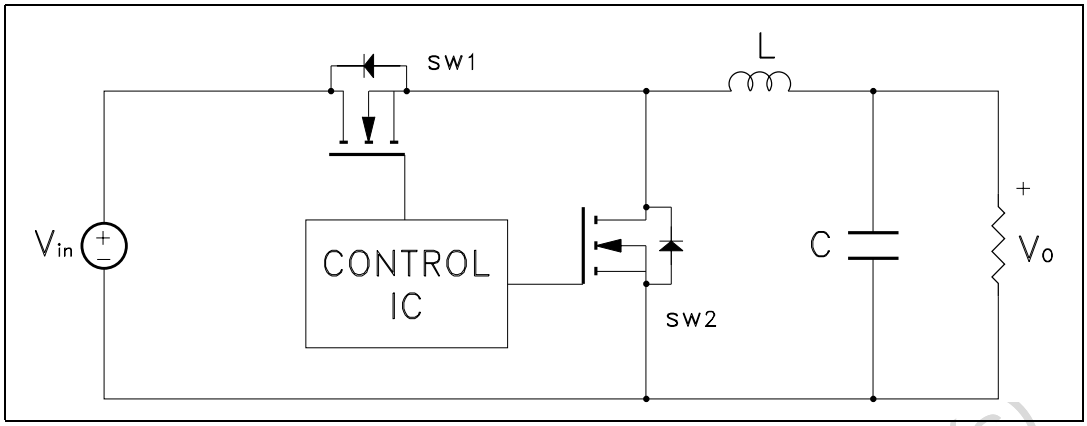

The power losses associated with the FETs in a synchronous buck converter can be estimated using the equations shown in the table below. The formulas give a good approximation, for the sake of performance comparison, of how different pairs of devices affect the converter efficiency. However a very important parameter, the working temperature, is not considered. The real device behavior is really dependent on how the heat generated inside the devices is removed to allow for a safer working junction temperature.

- The low side (SW2) device requires:
- Very low $R_{DS(on)}$ to reduce conduction losses
- Small Qgls to reduce the gate charge losses
- Small Coss to reduce losses due to output capacitance
- Small Qrr to reduce losses on SW1 during its turn-on
- The Cgd/Cgs ratio lower than Vth/Vgg ratio especially with low drain to source
- voltage to avoid the cross conduction phenomenon;
- The high side (SW1) device requires:
- Small Rg and Ls to allow higher gate current peak and to limit the voltage feedback on the gate
- Small Qg to have a faster commutation and to reduce gate charge losses
- Low $R_{DS(on)}$ to reduce the conduction losses.

Obsolete Product(s) - Obsolete Product(s)

Table 6. Power losses calculation

		High side switching (SW1)	Low side switch (SW2)
Pconduction		$R_{DS(on)SW1} * I_L^2 * \delta$	$R_{DS(on)SW2} * I_L^2 * (1-\delta)$
Pswitching		$V_{in} * (Q_{gsth(SW1)} + Q_{gd(SW1)}) * f * \frac{I_L}{I_g}$	Zero Voltage Switching
Pdiode	Recovery (1)	Not applicable	$V_{in} * Q_{rr(SW2)} * f$
	Conduction	Not applicable	$V_{f(SW2)} * I_L * t_{deadtime} * f$
Pgate(Q_G)		$Q_{g(SW1)} * V_{gg} * f$	$Q_{gls(SW2)} * V_{gg} * f$
P_{Qoss}		$\frac{V_{in} * Q_{oss(SW1)} * f}{2}$	$\frac{V_{in} * Q_{oss(SW2)} * f}{2}$

1. Dissipated by SW1 during turn-on

Table 7. Parameters meaning

Parameter	Meaning
d	Duty-cycle
Q_{gsth}	Post threshold gate charge
Q_{gls}	Third quadrant gate charge
Pconduction	On state losses
Pswitching	On-off transition losses
Pdiode	Conduction and reverse recovery diode losses
Pgate	Gate drive losses
P_{Qoss}	Output capacitance losses

Obsolete Product(s) - Obsolete Product(s)

5 Package mechanical data

In order to meet environmental requirements, ST offers these devices in ECOPACK® packages. These packages have a Lead-free second level interconnect. The category of second level interconnect is marked on the package and on the inner box label, in compliance with JEDEC Standard JESD97. The maximum ratings related to soldering conditions are also marked on the inner box label. ECOPACK is an ST trademark. ECOPACK specifications are available at: www.st.com

Obsolete Product(s) - Obsolete Product(s)

TO-220 MECHANICAL DATA

DIM.	mm.			inch		
	MIN.	TYP	MAX.	MIN.	TYP.	MAX.
A	4.40		4.60	0.173		0.181
b	0.61		0.88	0.024		0.034
b1	1.15		1.70	0.045		0.066
c	0.49		0.70	0.019		0.027
D	15.25		15.75	0.60		0.620
E	10		10.40	0.393		0.409
e	2.40		2.70	0.094		0.106
e1	4.95		5.15	0.194		0.202
F	1.23		1.32	0.048		0.052
H1	6.20		6.60	0.244		0.256
J1	2.40		2.72	0.094		0.107
L	13		14	0.511		0.551
L1	3.50		3.93	0.137		0.154
L20		16.40			0.645	
L30		28.90			1.137	
øP	3.75		3.85	0.147		0.151
Q	2.65		2.95	0.104		0.116

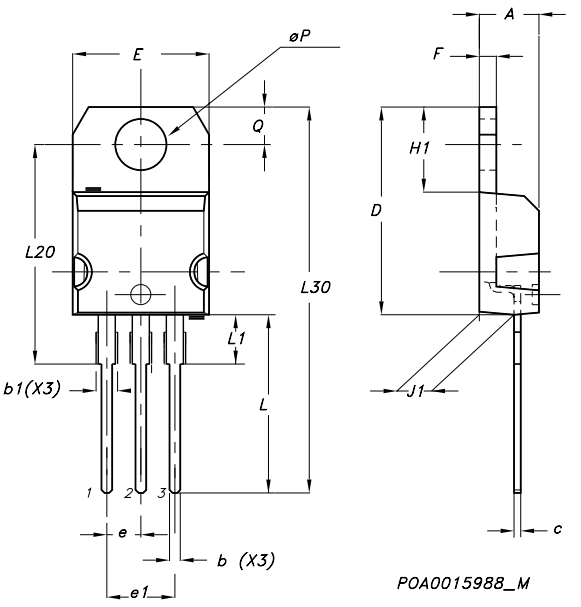

Obsole

6 Revision history

Table 8. Revision history

Date	Revision	Changes
31-May-2005	1	First release.
06-Sep-2006	2	The document has been reformatted.
31-Jan-2007	3	Typo mistake on *Table 1*.

Obsolete Product(s) - Obsolete Product(s)

Please Read Carefully:

Information in this document is provided solely in connection with ST products. STMicroelectronics NV and its subsidiaries (“ST”) reserve the right to make changes, corrections, modifications or improvements, to this document, and the products and services described herein at any time, without notice.

All ST products are sold pursuant to ST’s terms and conditions of sale.

Purchasers are solely responsible for the choice, selection and use of the ST products and services described herein, and ST assumes no liability whatsoever relating to the choice, selection or use of the ST products and services described herein.

No license, express or implied, by estoppel or otherwise, to any intellectual property rights is granted under this document. If any part of this document refers to any third party products or services it shall not be deemed a license grant by ST for the use of such third party products or services, or any intellectual property contained therein or considered as a warranty covering the use in any manner whatsoever of such third party products or services or any intellectual property contained therein.

UNLESS OTHERWISE SET FORTH IN ST’S TERMS AND CONDITIONS OF SALE ST DISCLAIMS ANY EXPRESS OR IMPLIED WARRANTY WITH RESPECT TO THE USE AND/OR SALE OF ST PRODUCTS INCLUDING WITHOUT LIMITATION IMPLIED WARRANTIES OF MERCHANTABILITY, FITNESS FOR A PARTICULAR PURPOSE (AND THEIR EQUIVALENTS UNDER THE LAWS OF ANY JURISDICTION), OR INFRINGEMENT OF ANY PATENT, COPYRIGHT OR OTHER INTELLECTUAL PROPERTY RIGHT.

UNLESS EXPRESSLY APPROVED IN WRITING BY AN AUTHORIZED ST REPRESENTATIVE, ST PRODUCTS ARE NOT RECOMMENDED, AUTHORIZED OR WARRANTED FOR USE IN MILITARY, AIR CRAFT, SPACE, LIFE SAVING, OR LIFE SUSTAINING APPLICATIONS, NOR IN PRODUCTS OR SYSTEMS WHERE FAILURE OR MALFUNCTION MAY RESULT IN PERSONAL INJURY, DEATH, OR SEVERE PROPERTY OR ENVIRONMENTAL DAMAGE. ST PRODUCTS WHICH ARE NOT SPECIFIED AS "AUTOMOTIVE GRADE" MAY ONLY BE USED IN AUTOMOTIVE APPLICATIONS AT USER’S OWN RISK.

Resale of ST products with provisions different from the statements and/or technical features set forth in this document shall immediately void any warranty granted by ST for the ST product or service described herein and shall not create or extend in any manner whatsoever, any liability of ST.

ST and the ST logo are trademarks or registered trademarks of ST in various countries.

Information in this document supersedes and replaces all information previously supplied.

The ST logo is a registered trademark of STMicroelectronics. All other names are the property of their respective owners.

© 2007 STMicroelectronics - All rights reserved

STMicroelectronics group of companies

Australia - Belgium - Brazil - Canada - China - Czech Republic - Finland - France - Germany - Hong Kong - India - Israel - Italy - Japan - Malaysia - Malta - Morocco - Singapore - Spain - Sweden - Switzerland - United Kingdom - United States of America

www.st.com