

Single-Ended Cordsets

#16 AWG yellow STOOW cable – U.S. color code
Oil-resistant PVC jacket
Low-resistance contact design with gold/palladium nickel plating

	9P	10P	12P
FEMALE FACE VIEW	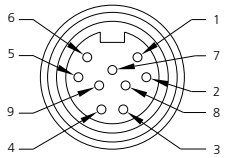	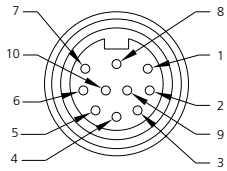	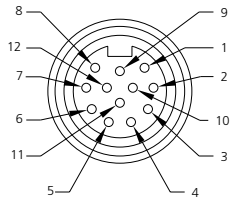
COLOR CODE	1- orange 2- blue 3- red-black trace 4- green-black trace 5- white 6- red 7- green-gnd 8- white-black trace 9- black	1- orange 2- blue 3- white-black trace 4- red-black trace 5- green-black trace 6- orange-black trace 7- red 8- green-gnd 9- black 10- white	1- orange 2- blue 3- white-black trace 4- red-black trace 5- green-black trace 6- orange-black trace 7- blue-black trace 8- black-white trace 9- green-gnd 10- red 11- white 12- black
VOLTAGE	600V AC/DC	600V AC/DC	600V AC/DC
CURRENT	7A	7A	5A
CONDUCTOR	#16-9	#16-10	#16-12

FEMALE	FIG	SINGLE-ENDED CORDSETS WITH #16 AWG ST00W CABLE 3 FEET LONG		
STRAIGHT	1	309000A01F030	301000A01F030	302000A01F030
90°	2	309001A01F030	301001A01F030	302001A01F030
MATING RECEPTACLE*	5	3R9006A20A120	3R1006A20A120	3R2006A20A120
MALE	**FIG**	**SINGLE-ENDED CORDSETS WITH #16 AWG ST00W CABLE 3 FEET LONG**		
STRAIGHT	3	309002A01F030	301002A01F030	302002A01F030
90°	4	309003A01F030	301003A01F030	302003A01F030
MATING RECEPTACLE*	5	3R9004A20A120	3R1004A20A120	3R2004A20A120

CATALOG OPTIONS

*See Page 82 for additional Mating Receptacles

Use the following chart to modify your part's specifications

309000A01F0301

CABLE LENGTH

6'	060
12'	120
20'	200

COUPLING NUT

STAINLESS STEEL . . . . . ADD	1

Specifications

CONNECTOR DIMENSIONS

FEMALE STRAIGHT

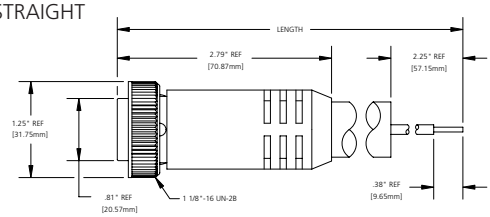

FIG 1

FEMALE 90°

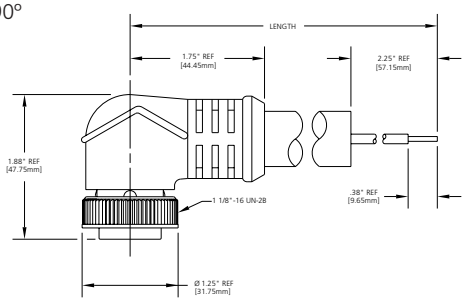

FIG 2

FEMALE CONNECTORS - FACE VIEWS

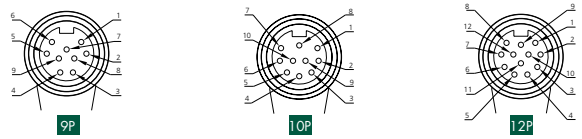

MALE STRAIGHT

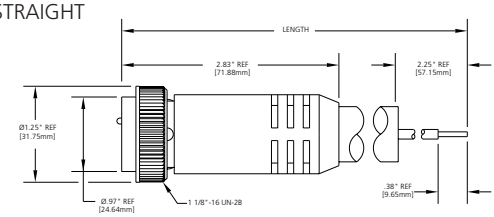

FIG 3

MALE 90°

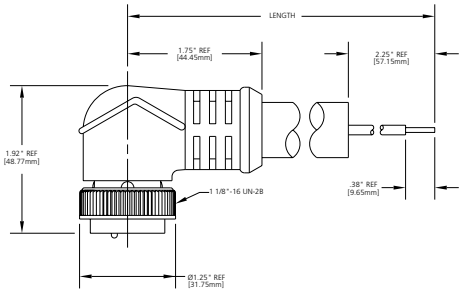

FIG 4

MALE CONNECTORS - FACE VIEWS

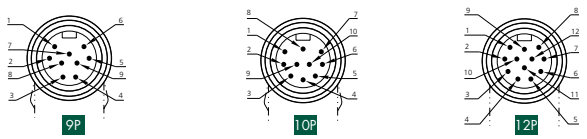

CERTIFIED ISO 9000 CERTIFIED

MECHANICAL	
CONNECTOR FACE:	PVC - UL STD 94 - V0
MOLDED BODY:	PVC - UL STD 94 - V0
COUPLING NUT:	ZINC DIECAST W/ BLACK EPOXY COAT, OPTIONAL STAINLESS STEEL TYPE 303
CABLE:	YELLOW, #16 AWG, PVC JACKET & PVC CONDUCTOR INSULATION OVER 65 X #34 COPPER STRANDING, 600V, UL STYLE ST00W CSA ST
OUTSIDE DIAMETER:	9P - .64" (16.3mm) 10P - .66" (16.8mm) 12P - .71" (18.0mm)
ELECTRICAL	
VOLTAGE RATING:	600 V AC/DC
AMPERAGE:	9P - 7A 10P - 7A 12P - 5A
ENVIRONMENTAL	
PROTECTION:	IP 68, NEMA 6P
AMBIENT OPERATING TEMP:	-4° to 221° F (-20° to 105° C)
CERTIFICATIONS	
UL:	UL RECOGNIZED, File No. E46237
CSA:	CSA CERTIFIED, File No. LR6837

RECEPTACLE DIMENSIONS

MALE STRAIGHT WITH 1/2" - 14NPT THREADS
FEMALE STRAIGHT WITH 1/2" - 14NPT THREADS

SEE PAGE 82 FOR ADDITIONAL RECEPTACLES

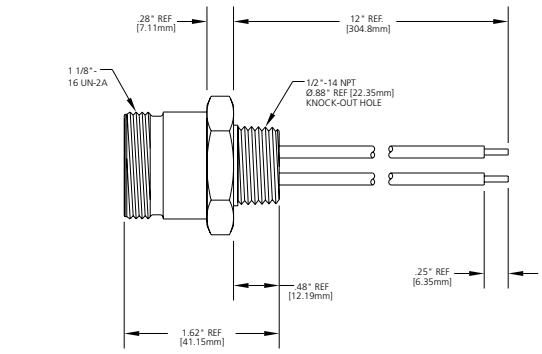

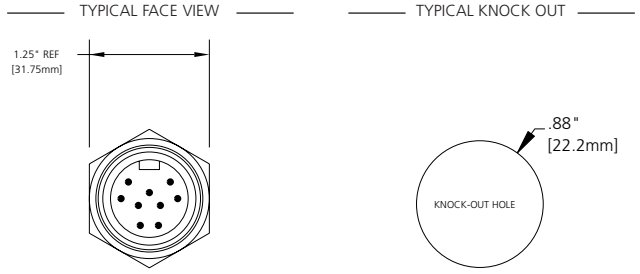

FIG 5

MALE RECEPTACLES - FACE VIEWS

