# T493 Series Military/Aerospace COTS $MnO_2$ Series

The Capacitance Company
KEMET CHARGED.

## Overview

The KEMET T493 Series is designed for the COTS (Commercial Off-The-Shelf) requirements of military and aerospace applications. This series is a surface mount product offering various lead-frame plating options, Weibull grading options, and surge current testing options. Standard, low, and ulta-low ESR options are available. All lots of this series are conditioned with MIL-PRF-55365 Group A testing. CECC testing options are available per CECC 30801-005 (please order with "CECC" in last four digits of part number). This series is also approved for DSCC Drawing 07016 (please see part number list specific to this drawing).

## Benefits

- Established reliability options
- Taped and reeled per EIA 481-1
- Symmetrical, compliant terminations
- Laser-marked case
- 100% surge current test available on all case sizes
- Termination options B, C, H, K, T
- Weibull failure options B and C
- Voltage rating of 4-50 VDC
- Operating temperature range of -55˚C to +125˚C
- Capacitance values of 0.1µF to 330µF
- All parts tested per Group A of MIL-PRF-55365
- Approved for DSCC Drawing 07016 applications

## Applications

Typical applications include decoupling and filtering in military and aerospace applications.

## Environmental Compliance

RoHS Compliant (6/6)* according to Directive 2002/95/EC

**When ordered with 100% Sn Solder*

## SPICE

For a detailed analysis of specific part numbers, please visit kemet.com for a free download of KEMET's SPICE software. The KEMET SPICE program is freeware intended to aid design engineers in analyzing the performance of these capacitors over frequency, temperature, ripple, and DC bias conditions.



© KEMET Electronics Corporation • P.O. Box 5928 • Greenville, SC 29606 (864) 963-6300 • www.kemet.com

## Ordering Information

| T | 493 | D | 227 | K | 006 | C | H | 61 | 20 |
|---|---|---|---|---|---|---|---|---|---|
| Capacitor Class | Series | Case Size | Capacitance Code (pF) | Capacitance Tolerance | Voltage | Failure Rate/ Design | Lead Material | Surge | ESR |
| T = Tantalum | Military COTS | A = 3216-18<br>B = 3528-21<br>C = 6032-28<br>D = 7343-31<br>E = 7260-38<br>X = 7343-43 | First two digits represent significant figures. Third digit specifies number of zeros. | J = ±5%<br>K = ±10%<br>M = ±20% | 004 = 4V<br>006 = 6.3V<br>010 = 10V<br>016 = 16V<br>020 = 20V<br>025 = 25V<br>035 = 35V<br>050 = 50V | A = N/A<br>B = 0.1%/1000 hrs<br>C = .01%/1000 hrs | C = Hot Solder Dipped<br>H = Standard Solder Coated (SnPb 5% Pb minimum)<br>B = Gold Plated<br>K = Solder Fused<br>T = 100% Tin | 61 = None<br>62 = 10 Cycles 25°C After Weibull<br>63 = 10 cycles, -55°C and 85°C After Weibull<br>64 = 10 cycles, -55°C and 85°C Before Weibull Special CSPEC: CECC | 10 = ESR - Standard<br>20 = ESR - Low<br>30 = ESR - Ultra low |

## Ordering Information DSCC 07016

| 07016- | 001 | K | B | H | 6A |
|---|---|---|---|---|---|
| Drawing Number | Dash Number | Capacitance Tolerance | Reliability Grade | Lead Material | Surge |
| | See p/n list | J = ±5%<br>K = ±10%<br>M = ±20% | B = 0.1%/1000 hours<br>C = 0.01%/1000 hours | C = Hot Solder Dipped<br>H = Standard Solder Coated (SnPb 5% Pb minimum)<br>B = Gold Plated | 6A = + 25ºC after Weibull<br>6B = -55ºC and +85ºC after Weibull<br>6C = -55ºC and + 85ºC before Weibull<br>6Z or no option = No test required |

## Performance Characteristics

| Item | Performance Characteristics |
|---|---|
| Operating Temperature | -55°C to 125°C |
| Rated Capacitance Range | 0.1 µF–330 µF @ 120 Hz/25°C |
| Capacitance Tolerance | J Tolerance (5%), K Tolerance (10%), M Tolerance (20%) |
| Rated Voltage Range | 4V–50V |
| DF(120Hz) | Refer to Part Number Electrical Specification Table |
| ESR (100kHz) | Refer to Part Number Electrical Specification Table |
| Leakage Current | ≤ 0.01CV (mA) at rated voltage after 5 minutes |

## Qualification

| Test | Condition | Characteristics | | | |
|---|---|---|---|---|---|
| Endurance | 85°C @ Rated Voltage, 2000 Hours<br>125°C @ 2/3 Rated Voltage, 2000 Hours | ΔC/C | Within ± 10% of initial value | | |
| | | DF | Within initial limits | | |
| | | DCL | Within 1.25 x initial limit | | |
| | | ESR | Within initial limits | | |
| Storage Life | 125°C @ 0 Volts, 2000 Hours | ΔC/C | Within ± 10% of initial value | | |
| | | DF | Within initial limits | | |
| | | DCL | Within 1.25 x initial limit | | |
| | | ESR | Within initial limits | | |
| Thermal Shock | MIL-Std-202, Method 107, Condition B, mounted, -55C° to 125°C, 1000 cycles | ΔC/C | Within ± 5% of initial value | | |
| | | DF | Within initial limits | | |
| | | DCL | Within 1.25 x initial limit | | |
| | | ESR | Within initial limits | | |
| Temperature Stability | Extreme temperature exposure at a succession of continuous steps at +25ºC, -55ºC, +25ºC, +85ºC, +125ºC, +25ºC | | +25°C | -55°C | +85°C | +125°C |
| | | ΔC/C | IL* | ±10% | ±10% | ±20% |
| | | DF | IL | IL | 1.5 x IL | 1.5 x IL |
| | | DCL | IL | n/a | 10 x IL | 12 x IL |
| Surge Voltage | 25°C and 85° C, 1.32 x Rated Voltage 1000 cycles. (125°C, 1.2 x Rated Voltage) | ΔC/C | Within ± 5% of initial value | | |
| | | DF | Within initial limits | | |
| | | DCL | Within initial limits | | |
| | | ESR | Within initial limits | | |
| Mechanical Shock/Vibration | MIL-Std-202, Meth. 213, Cond. I, 100G Peak.<br>MIL-Std-202, Meth. 204, Cond. D, 10Hz to 2000Hz, 20G Peak | ΔC/C | Within ±10% of initial value | | |
| | | DF | Within initial limits | | |
| | | DCL | Within initial limits | | |

**IL = Initial Limit*

## Certification

MIL-PRF-55365/8
CECC 30801-005
DSCC Drawing 07016

## Electrical Characteristics

### ESR vs. Frequency

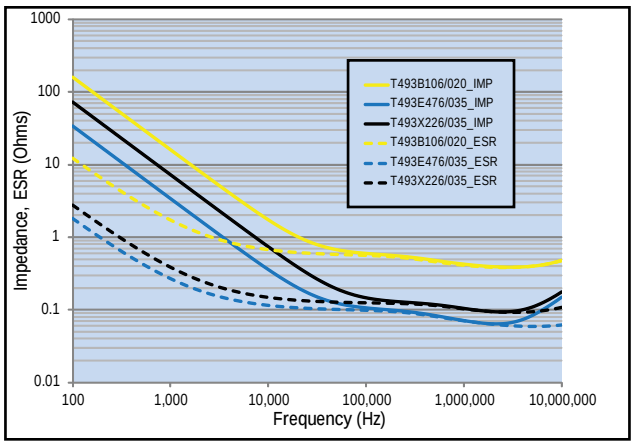


### Capacitance vs. Frequency

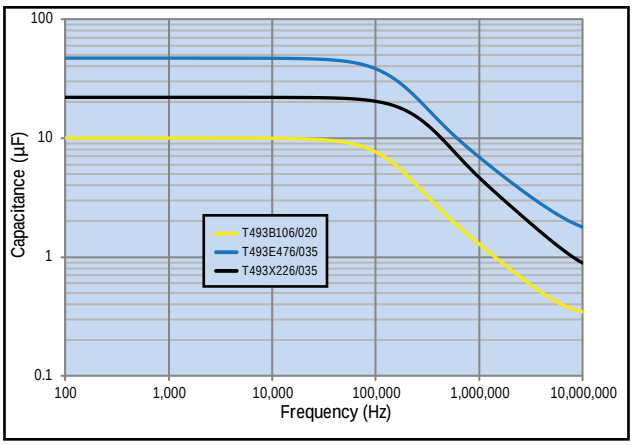


## Dimensions – Millimeters (Inches)

Metric will govern

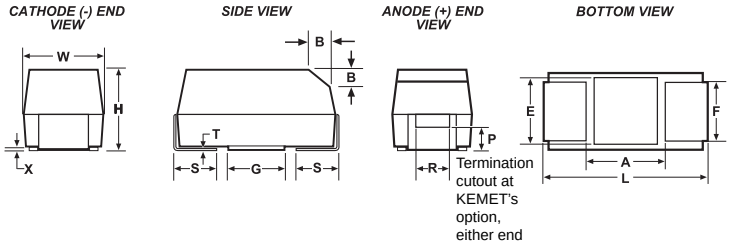


| Case Size | | Component | | | | | | | | | | | | |
|---|---|---|---|---|---|---|---|---|---|---|---|---|---|---|
| KEMET | EIA | L* | W* | H* | F* ±0.1 ±(.004) | S* ±0.3 ±(.012) | B* ±0.15 (Ref) ±.006 | X (Ref) | P (Ref) | R (Ref) | T (Ref) | A (Min) | G (Ref) | E (Ref) |
| A | 3216-18 | 3.2 ± 0.2 (.126 ± .008) | 1.6 ± 0.2 (.063 ± .008) | 1.6 ± 0.2 (.063 ± .008) | 1.2 (.047) | 0.8 (.031) | 0.4 (.016) | 0.10 ± 0.10 (.004 ± .004) | 0.4 (.016) | 0.4 (.016) | 0.13 (.005) | 1.4 (.055) | 1.1 (.043) | 1.3 (.051) |
| B | 3528-21 | 3.5 ± 02 (138 ± .008) | 2.8 ± 0.2 (.110 ± .008) | 1.9 ± 0.2 (.075 ± .008) | 2.2 (.087) | 0.8 (.031) | 0.4 (.016) | 0.10 ± 0.10 (.004 ± .004) | 0.5 (.020) | 1.0 (.039) | 0.13 (.005) | 2.1 (.083) | 1.8 (.071) | 2.2 (.087) |
| C | 6032-28 | 6.0 ± 0.3 (.236 ± .03) | 3.2 ± 0.3 (.126 ± .012) | 2.5 ± 0.3 (.098 ± .012) | 2.2 (.087) | 1.3 (.051) | 0.5 (.020) | 0.10 ± 0.10 (.004 ± .004) | 0.9 (.035) | 1.0 (.039) | 0.13 (.005) | 3.1 ( (.122) | 2.8 (.110) | 2.4 (.094) |
| D | 7343-31 | 7.3 ± 0.3 (287 ± .012) | 4.3 ± 0.3 (.169 ± .012) | 2.8 ± 0.3 (.110 ± .012) | 2.4 (.094) | 1.3 (.051) | 0.5 (.020) | 0.10 ± 0.10 (.004 ± .004) | 0.9 (.035) | 1.0 (.039) | 0.13 (.005) | 3.8 (.150) | 3.5 (.138) | 3.5 (.138) |
| X | 7343-43 | 7.3 ± 0.3 (.287 ± .012) | 4.3 ± 0.3 (.169 ± .012) | 4.0 ± 0.3 (.157 ± .012) | 2.4 (.094) | 1.3 (.051) | 0.5 (.020) | 0.10 ± 0.10 (.004 ± .004) | 1.7 (.067) | 1.0 (.039) | 0.13 (.005) | 3.8 (.150) | 3.5 (.138) | 3.5 (.138) |
| E | 7260-38 | 7.3 ± 0.3 (.287 ± .012) | 6.0± 0.3 (.236 ± .012) | 3.6 ± 0.2 (.142 ± .008) | 4.1 (.161) | 1.3 (.051) | 0.5 (.020) | 0.10 ± 0.10 (.004 ± .004) | 0.9 (.035) | 1.0 (.039) | 0.13 (.005) | 0.13 (.005) | 3.5 (.138) | 3.5 (.138) |

*Notes: (Ref) – Dimensions provided for reference only. No dimensions provided for B, P or R because low profile cases do not have a bevel or a notch.*

** MIL-C-55365/8 specified dimensions*

## Table 1A – Ratings & Part Number Reference

| Rated Voltage | Rated Cap | Case Code/ Case Size | KEMET Part Number | DC Leakage | DF | Standard ESR | Low ESR | Ultra-low ESR | Moisture Sensitivity |
|---|---|---|---|---|---|---|---|---|---|
| 85°C | 120Hz | KEMET/EIA | (See below for part options) | µAmps +20°C | +20°C 120Hz | +20°C 100kHz | +20°C 100kHz | +20°C 100kHz | Temp≤260°C |
| VDC | µF | | | max/5min | % Max | Ohms | Ohms | Ohms | J-STD-020D |
| 4 | 2.2 | A/3216-18 | T493A225(1)004(2)(3)(4)(5) | 0.1 | 6.0 | 8.0 | 6.0 | N/A | 1 |
| 4 | 3.3 | A/3216-18 | T493A335(1)004(2)(3)(4)(5) | 0.1 | 6.0 | 8.0 | 4.0 | N/A | 1 |
| 4 | 4.7 | A/3216-18 | T493A475(1)004(2)(3)(4)(5) | 0.2 | 6.0 | 8.0 | 3.5 | N/A | 1 |
| 4 | 6.8 | A/3216-18 | T493A685(1)004(2)(3)(4)(5) | 0.3 | 6.0 | 6.0 | 3.0 | N/A | 1 |
| 4 | 6.8 | B/3528-21 | T493B685(1)004(2)(3)(4)(5) | 0.3 | 6.0 | 5.5 | 2.0 | N/A | 1 |
| 4 | 10 | A/3216-18 | T493A106(1)004(2)(3)(4)(5) | 0.4 | 6.0 | 6.0 | 2.0 | N/A | 1 |
| 4 | 10 | B/3528-21 | T493B106(1)004(2)(3)(4)(5) | 0.4 | 6.0 | 3.5 | 1.2 | N/A | 1 |
| 4 | 15 | A/3216-18 | T493A156(1)004(2)(3)(4)(5) | 0.6 | 6.0 | 4.0 | 1.5 | N/A | 1 |
| 4 | 15 | B/3528-21 | T493B156(1)004(2)(3)(4)(5) | 0.6 | 6.0 | 3.5 | 1.2 | N/A | 1 |
| 4 | 22 | A/3216-18 | T493A226(1)004(2)(3)(4)(5) | 0.9 | 6.0 | 4.0 | 1.5 | N/A | 1 |
| 4 | 22 | B/3528-21 | T493B226(1)004(2)(3)(4)(5) | 0.9 | 6.0 | 3.5 | 0.6 | N/A | 1 |
| 4 | 22 | C/6032-28 | T493C226(1)004(2)(3)(4)(5) | 0.9 | 6.0 | 1.8 | 0.5 | N/A | 1 |
| 4 | 33 | A/3216-18 | T493A336(1)004(2)(3)(4)(5) | 1.3 | 6.0 | 4.0 | 3.0 | N/A | 1 |
| 4 | 33 | B/3528-21 | T493B336(1)004(2)(3)(4)(5) | 1.3 | 6.0 | 3.5 | 0.5 | N/A | 1 |
| 4 | 33 | C/6032-28 | T493C336(1)004(2)(3)(4)(5) | 1.3 | 6.0 | 1.8 | 0.5 | N/A | 1 |
| 4 | 47 | B/3528-21 | T493B476(1)004(2)(3)(4)(5) | 1.9 | 6.0 | 3.0 | 0.5 | N/A | 1 |
| 4 | 47 | C/6032-28 | T493C476(1)004(2)(3)(4)(5) | 1.9 | 6.0 | 1.8 | 0.5 | N/A | 1 |
| 4 | 68 | B/3528-21 | T493B686(1)004(2)(3)(4)(5) | 2.7 | 6.0 | 3.5 | 2.0 | N/A | 1 |
| 4 | 68 | C/6032-28 | T493C686(1)004(2)(3)(4)(5) | 2.7 | 6.0 | 1.6 | 0.25 | N/A | 1 |
| 4 | 68 | D/7343-31 | T493D686(1)004(2)(3)(4)(5) | 2.7 | 6.0 | 0.8 | 0.2 | N/A | 1 |
| 4 | 100 | B/3528-21 | T493B107(1)004(2)(3)(4)(5) | 4.0 | 8.0 | 1.0 | 0.7 | 0.50 | 1 |
| 4 | 100 | C/6032-28 | T493C107(1)004(2)(3)(4)(5) | 4.0 | 8.0 | 1.2 | 0.2 | N/A | 1 |
| 4 | 100 | D/7343-31 | T493D107(1)004(2)(3)(4)(5) | 4.0 | 8.0 | 0.8 | 0.2 | N/A | 1 |
| 4 | 150 | C/6032-28 | T493C157(1)004(2)(3)(4)(5) | 6.0 | 8.0 | 1.2 | 0.3 | 0.25 | 1 |
| 4 | 150 | D/7343-31 | T493D157(1)004(2)(3)(4)(5) | 6.0 | 8.0 | 0.8 | 0.15 | N/A | 1 |
| 4 | 220 | D/7343-31 | T493D227(1)004(2)(3)(4)(5) | 8.8 | 8.0 | 0.9 | 0.7 | N/A | 1 |
| 4 | 330 | D/7343-31 | T493D337(1)004(2)(3)(4)(5) | 13.2 | 8.0 | 0.7 | 0.15 | N/A | 1 |
| 4 | 330 | X/7343-43 | T493X337(1)004(2)(3)(4)(5) | 13.2 | 8.0 | 0.5 | 0.2 | N/A | 1 |
| 6.3 | 1.5 | A/3216-18 | T493A155(1)006(2)(3)(4(5) | 0.1 | 6.0 | 8.0 | 6.0 | N/A | 1 |
| 6.3 | 2.2 | A/3216-18 | T493A225(1)006(2)(3)(4)(5) | 0.1 | 6.0 | 8.0 | 6.0 | N/A | 1 |
| 6.3 | 3.3 | A/3216-18 | T493A335(1)006(2)(3)(4)(5) | 0.2 | 6.0 | 8.0 | 6.0 | N/A | 1 |
| 6.3 | 4.7 | A/3216-18 | T493A475(1)006(2)(3)(4)(5) | 0.3 | 6.0 | 6.0 | 3.5 | N/A | 1 |
| 6.3 | 4.7 | B/3528-21 | T493B475(1)006(2)(3)(4)(5) | 0.3 | 6.0 | 5.5 | 3.5 | N/A | 1 |
| 6.3 | 6.8 | A/3216-18 | T493A685(1)006(2)(3)(4)(5) | 0.4 | 6.0 | 6.0 | 2.0 | N/A | 1 |
| 6.3 | 6.8 | B/3528-21 | T493B685(1)006(2)(3)(4)(5) | 0.4 | 6.0 | 3.5 | 1.2 | N/A | 1 |
| 6.3 | 10 | A/3216-18 | T493A106(1)006(2)(3)(4)(5) | 0.6 | 6.0 | 4.0 | 2.0 | N/A | 1 |
| 6.3 | 10 | B/3528-21 | T493B106(1)006(2)(3)(4)(5) | 0.6 | 6.0 | 3.5 | 1.0 | N/A | 1 |
| 6.3 | 15 | A/3216-18 | T493A156(1)006(2)(3)(4)(5) | 0.9 | 6.0 | 4.0 | 1.5 | N/A | 1 |
| 6.3 | 15 | B/3528-21 | T493B156(1)006(2)(3)(4)(5) | 0.9 | 6.0 | 3.5 | 0.7 | N/A | 1 |
| 6.3 | 15 | C/6032-28 | T493C156(1)006(2)(3)(4)(5) | 0.9 | 6.0 | 1.8 | 0.6 | N/A | 1 |
| 6.3 | 22 | A/3216-18 | T493A226(1)006(2)(3)(4)(5) | 1.4 | 6.0 | 4.0 | 3.0 | N/A | 1 |
| 6.3 | 22 | B/3528-21 | T493B226(1)006(2)(3)(4)(5) | 1.4 | 6.0 | 3.5 | 0.6 | N/A | 1 |
| 6.3 | 22 | C/6032-28 | T493C226(1)006(2)(3)(4)(5) | 1.4 | 6.0 | 1.8 | 0.5 | N/A | 1 |
| 6.3 | 33 | B/3528-21 | T493B336(1)006(2)(3)(4)(5) | 2.1 | 6.0 | 3.0 | 0.6 | N/A | 1 |
| 6.3 | 33 | C/6032-28 | T493C336(1)006(2)(3)(4)(5) | 2.1 | 6.0 | 1.8 | 0.3 | N/A | 1 |
| 6.3 | 47 | B/3528-21 | T493B476(1)006(2)(3)(4)(5) | 3.0 | 6.0 | 3.5 | 2.0 | N/A | 1 |
| 6.3 | 47 | C/6032-28 | T493C476(1)006(2)(3)(4)(5) | 3.0 | 6.0 | 1.6 | 0.25 | 0.25 | 1 |
| 6.3 | 47 | D/7343-31 | T493D476(1)006(2)(3)(4)(5) | 3.0 | 6.0 | 0.8 | 0.22 | N/A | 1 |
| VDC | µF | KEMET/EIA | (See below for part options) | max/5min | % Max | Ohms | Ohms | Ohms | J-STD-020D |
| 85°C | 120Hz | | | µAmps +20°C | +20°C 120Hz | +20°C 100kHz | +20°C 100kHz | +20°C 100kHz | Temp≤260°C |
| Rated Voltage | Rated Cap | Case Code/ Case Size | KEMET Part Number | DC Leakage | DF | Standard ESR | Low ESR | Ultra-low ESR | Moisture Sensitivity |

*(1) To complete KEMET part number, insert M for ± 20%, K for ± 10% or J for 5%. Designates Capacitance tolerance.*

*(2) To complete KEMET part number, insert B (0.1%/1000Hrs), C (0.01%/1000Hrs) or A = N/A. Designates Reliability Level.*

*(3) To complete KEMET part number, insert B = Gold Plated, C = Hot solder dipped, H = Solder Plated, K = Solder Fused or T = 100% Tin (Sn). Designates Termination Finish.*

*(4) To complete KEMET part number, insert 61 = None, 62 = 10 cycles +25°C, 63 = 10 cycles -55°C +85°C after Weibull or 64 = 10 cycles -55°C +85°C before Weibull. Designates Surge current option.*

*(5) To complete KEMET part number, insert 10 = Standard ESR, 20 = Low ESR or 30 = Ultra Low ESR. Designates ESR option.*

*Refer to Ordering Information for additional detail.*



Roll Over for Order Info.

## Table 1A – Ratings & Part Number Reference con't

| Rated Voltage | Rated Cap | Case Code/ Case Size | KEMET Part Number | DC Leakage | DF | Standard ESR | Low ESR | Ultra-low ESR | Moisture Sensitivity |
|---|---|---|---|---|---|---|---|---|---|
| 85ºC | 120Hz | KEMET/EIA | (See below for part options) | µAmps +20ºC | +20ºC 120Hz | +20ºC 100kHz | +20ºC 100kHz | +20ºC 100kHz | Temp≤260ºC |
| VDC | µF | | | max/5min | % Max | Ohms | Ohms | Ohms | J-STD-020D |
| 6.3 | 68 | B/3528-21 | T493B686(1)006(2)(3)(4)(5) | 4.3 | 8.0 | 1.0 | 0.65 | N/A | 1 |
| 6.3 | 68 | C/6032-28 | T493C686(1)006(2)(3)(4)(5) | 4.3 | 6.0 | 1.2 | 0.2 | N/A | 1 |
| 6.3 | 68 | D/7343-31 | T493D686(1)006(2)(3)(4)(5) | 4.3 | 6.0 | 0.8 | 0.2 | 0.18 | 1 |
| 6.3 | 100 | B/3528-21 | T493B107(1)006(2)(3)(4)(5) | 6.3 | 15.0 | 10.0 | 8.0 | 0.70 | 1 |
| 6.3 | 100 | C/6032-28 | T493C107(1)006(2)(3)(4)(5) | 6.3 | 8.0 | 1.2 | 0.3 | 0.15 | 1 |
| 6.3 | 100 | D/7343-31 | T493D107(1)006(2)(3)(4)(5) | 6.3 | 8.0 | 0.8 | 0.15 | N/A | 1 |
| 6.3 | 150 | C/6032-28 | T493C157(1)006(2)(3)(4)(5) | 9.5 | 8.0 | 1.2 | 0.3 | 0.20 | 1 |
| 6.3 | 150 | D/7343-31 | T493D157(1)006(2)(3)(4)(5) | 9.5 | 8.0 | 0.7 | 0.15 | N/A | 1 |
| 6.3 | 220 | C/6032-28 | T493C227(1)006(2)(3)(4)(5) | 13.9 | 10.0 | 1.2 | 0.3 | 0.23 | 1 |
| 6.3 | 220 | D/7343-31 | T493D227(1)006(2)(3)(4)(5) | 13.9 | 8.0 | 0.7 | 0.1 | 0.10 | 1 |
| 6.3 | 220 | X/7343-43 | T493X227(1)006(2)(3)(4)(5) | 13.9 | 8.0 | 0.7 | 0.15 | 0.07 | 1 |
| 6.3 | 330 | D/7343-31 | T493D337(1)006(2)(3)(4)(5) | 20.8 | 8.0 | 0.5 | 0.15 | 0.10 | 1 |
| 6.3 | 330 | X/7343-43 | T493X337(1)006(2)(3)(4)(5) | 20.8 | 8.0 | 0.5 | 0.1 | 0.07 | 1 |
| 6.3 | 470 | X/7343-43 | T493X477(1)006(2)(3)(4)(5) | 29.6 | 10.0 | 0.2 | 0.1 | 0.05 | 1 |
| 10 | 1 | A/3216-18 | T493A105(1)010(2)(3)(4)(5) | 0.1 | 4.0 | 10.0 | 6.0 | N/A | 1 |
| 10 | 1.5 | A/3216-18 | T493A155(1)010(2)(3)(4)(5) | 0.2 | 6.0 | 8.0 | 6.0 | N/A | 1 |
| 10 | 2.2 | A/3216-18 | T493A225(1)010(2)(3)(4)(5) | 0.2 | 6.0 | 8.0 | 6.0 | N/A | 1 |
| 10 | 3.3 | A/3216-18 | T493A335(1)010(2)(3)(4)(5) | 0.3 | 6.0 | 6.0 | 4.0 | N/A | 1 |
| 10 | 3.3 | B/3528-21 | T493B335(1)010(2)(3)(4)(5) | 0.3 | 6.0 | 5.5 | 3.5 | N/A | 1 |
| 10 | 4.7 | A/3216-18 | T493A475(1)010(2)(3)(4)(5) | 0.5 | 6.0 | 6.0 | 3.0 | N/A | 1 |
| 10 | 4.7 | B/3528-21 | T493B475(1)010(2)(3)(4)(5) | 0.5 | 6.0 | 3.5 | 1.5 | 1.3 | 1 |
| 10 | 6.8 | A/3216-18 | T493A685(1)010(2)(3)(4)(5) | 0.7 | 6.0 | 6.0 | 3.0 | N/A | 1 |
| 10 | 6.8 | B/3528-21 | T493B685(1)010(2)(3)(4)(5) | 0.7 | 6.0 | 3.5 | 1.2 | 0.90 | 1 |
| 10 | 10 | A/3216-18 | T493A106(1)010(2)(3)(4)(5) | 1.0 | 6.0 | 4.0 | 1.8 | N/A | 1 |
| 10 | 10 | B/3528-21 | T493B106(1)010(2)(3)(4)(5) | 1.0 | 6.0 | 3.5 | 0.8 | 0.75 | 1 |
| 10 | 10 | C/6032-28 | T493C106(1)010(2)(3)(4)(5) | 1.0 | 6.0 | 1.8 | 0.6 | N/A | 1 |
| 10 | 15 | A/3216-18 | T493A156(1)010(2)(3)(4)(5) | 1.5 | 8.0 | 6.0 | 4.0 | 3.2 | 1 |
| 10 | 15 | B/3528-21 | T493B156(1)010(2)(3)(4)(5) | 1.5 | 6.0 | 3.5 | 0.7 | N/A | 1 |
| 10 | 15 | C/6032-28 | T493C156(1)010(2)(3)(4)(5) | 1.5 | 6.0 | 1.8 | 0.5 | 0.48 | 1 |
| 10 | 22 | B/3528-21 | T493B226(1)010(2)(3)(4)(5) | 2.2 | 6.0 | 3.0 | 0.7 | N/A | 1 |
| 10 | 22 | C/6032-28 | T493C226(1)010(2)(3)(4)(5) | 2.2 | 6.0 | 1.8 | 0.4 | 0.29 | 1 |
| 10 | 33 | B/3528-21 | T493B336(1)010(2)(3)(4)(5) | 3.3 | 6.0 | 3.5 | 2.0 | N/A | 1 |
| 10 | 33 | C/6032-28 | T493C336(1)010(2)(3)(4)(5) | 3.3 | 6.0 | 1.6 | 0.3 | N/A | 1 |
| 10 | 33 | D/7343-31 | T493D336(1)010(2)(3)(4)(5) | 3.3 | 6.0 | 0.8 | 0.3 | N/A | 1 |
| 10 | 47 | C/6032-28 | T493C476(1)010(2)(3)(4)(5) | 4.7 | 6.0 | 1.2 | 0.3 | N/A | 1 |
| 10 | 47 | D/7343-31 | T493D476(1)010(2)(3)(4)(5) | 4.7 | 6.0 | 0.8 | 0.2 | 0.08 | 1 |
| 10 | 68 | C/6032-28 | T493C686(1)010(2)(3)(4)(5) | 6.8 | 6.0 | 1.2 | 0.3 | 0.23 | 1 |
| 10 | 68 | D/7343-31 | T493D686(1)010(2)(3)(4)(5) | 6.8 | 6.0 | 0.8 | 0.2 | 0.09 | 1 |
| 10 | 68 | X/7343-43 | T493X686(1)010(2)(3)(4)(5) | 6.8 | 4.0 | 0.5 | 0.15 | 0.15 | 1 |
| 10 | 100 | C/6032-28 | T493C107(1)010(2)(3)(4)(5) | 10.0 | 8.0 | 1.2 | 0.3 | N/A | 1 |
| 10 | 100 | D/7343-31 | T493D107(1)010(2)(3)(4)(5) | 10.0 | 8.0 | 0.7 | 0.1 | 0.08 | 1 |
| 10 | 150 | D/7343-31 | T493D157(1)010(2)(3)(4)(5) | 15.0 | 8.0 | 0.7 | 0.1 | 0.08 | 1 |
| 10 | 150 | X/7343-43 | T493X157(1)010(2)(3)(4)(5) | 15.0 | 8.0 | 0.7 | 0.2 | 0.09 | 1 |
| 10 | 220 | D/7343-31 | T493D227(1)010(2)(3)(4)(5) | 22.0 | 8.0 | 0.5 | 0.2 | 0.08 | 1 |
| 10 | 220 | X/7343-43 | T493X227(1)010(2)(3)(4)(5) | 22.0 | 8.0 | 0.5 | 0.1 | 0.05 | 1 |
| 10 | 330 | X/7343-43 | T493X337(1)010(2)(3)(4)(5) | 33.0 | 10.0 | 0.5 | 0.1 | 0.05 | 1 |
| 16 | 0.68 | A/3216-18 | T493A684(1)016(2)(3)(4)(5) | 0.1 | 6.0 | 12.0 | 8.0 | N/A | 1 |
| VDC | µF | KEMET/EIA | (See below for part options) | max/5min | % Max | Ohms | Ohms | Ohms | J-STD-020D |
| 85ºC | 120Hz | | | µAmps +20ºC | +20ºC 120Hz | +20ºC 100kHz | +20ºC 100kHz | +20ºC 100kHz | Temp≤260ºC |
| Rated Voltage | Rated Cap | Case Code/ Case Size | KEMET Part Number | DC Leakage | DF | Standard ESR | Low ESR | Ultra-low ESR | Moisture Sensitivity |

*(1) To complete KEMET part number, insert M for ± 20%, K for ± 10% or J for 5%. Designates Capacitance tolerance.*

*(2) To complete KEMET part number, insert B (0.1%/1000Hrs), C (0.01%/1000Hrs) or A = N/A. Designates Reliability Level.*

*(3) To complete KEMET part number, insert B = Gold Plated, C = Hot solder dipped, H = Solder Plated, K = Solder Fused or T = 100% Tin (Sn). Designates Termination Finish.*

*(4) To complete KEMET part number, insert 61 = None, 62 = 10 cycles +25°C, 63 = 10 cycles -55°C +85°C after Weibull or 64 = 10 cycles -55°C +85°C before Weibull. Designates Surge current option.*

*(5) To complete KEMET part number, insert 10 = Standard ESR, 20 = Low ESR or 30 = Ultra Low ESR. Designates ESR option.*

*Refer to Ordering Information for additional detail.*



Roll Over for Order Info.

## Table 1A – Ratings & Part Number Reference con't

| Rated Voltage | Rated Cap | Case Code/ Case Size | KEMET Part Number | DC Leakage | DF | Standard ESR | Low ESR | Ultra-low ESR | Moisture Sensitivity |
|---|---|---|---|---|---|---|---|---|---|
| 85ºC | 120Hz | KEMET/EIA | (See below for part options) | µAmps +20ºC | +20ºC 120Hz | +20ºC 100kHz | +20ºC 100kHz | +20ºC 100kHz | Temp≤260ºC |
| VDC | µF | | | max/5min | % Max | Ohms | Ohms | Ohms | J-STD-020D |
| 16 | 1 | A/3216-18 | T493A105(1)016(2)(3)(4)(5) | 0.2 | 4.0 | 10.0 | 6.0 | N/A | 1 |
| 16 | 1.5 | A/3216-18 | T493A155(1)016(2)(3)(4)(5) | 0.2 | 6.0 | 8.0 | 6.0 | N/A | 1 |
| 16 | 2.2 | A/3216-18 | T493A225(1)016(2)(3)(4)(5) | 0.4 | 6.0 | 6.0 | 4.0 | N/A | 1 |
| 16 | 3.3 | A/3216-18 | T493A335(1)016(2)(3)(4)(5) | 0.5 | 6.0 | 6.0 | 3.5 | N/A | 1 |
| 16 | 3.3 | B/3528-21 | T493B335(1)016(2)(3)(4)(5) | 0.5 | 6.0 | 3.5 | 2.0 | N/A | 1 |
| 16 | 4.7 | A/3216-18 | T493A475(1)016(2)(3)(4)(5) | 0.8 | 6.0 | 6.0 | 3.0 | N/A | 1 |
| 16 | 4.7 | B/3528-21 | T493B475(1)016(2)(3)(4)(5) | 0.8 | 6.0 | 3.5 | 1.5 | N/A | 1 |
| 16 | 6.8 | A/3216-18 | T493A685(1)016(2)(3)(4)(5) | 1.1 | 6.0 | 7.0 | 3.0 | N/A | 1 |
| 16 | 6.8 | B/3528-21 | T493B685(1)016(2)(3)(4)(5) | 1.1 | 6.0 | 3.5 | 1.2 | N/A | 1 |
| 16 | 6.8 | C/6032-28 | T493C685(1)016(2)(3)(4)(5) | 1.1 | 6.0 | 1.9 | 0.8 | 0.75 | 1 |
| 16 | 10 | B/3528-21 | T493B106(1)016(2)(3)(4)(5) | 1.6 | 6.0 | 3.5 | 0.8 | N/A | 1 |
| 16 | 10 | C/6032-28 | T493C106(1)016(2)(3)(4)(5) | 1.6 | 6.0 | 1.8 | 0.6 | N/A | 1 |
| 16 | 15 | B/3528-21 | T493B156(1)016(2)(3)(4)(5) | 2.4 | 6.0 | 3.0 | 0.8 | 0.80 | 1 |
| 16 | 15 | C/6032-28 | T493C156(1)016(2)(3)(4)(5) | 2.4 | 6.0 | 1.8 | 0.4 | N/A | 1 |
| 16 | 22 | B/3528-21 | T493B226(1)016(2)(3)(4)(5) | 3.5 | 6.0 | 2.2 | 0.8 | N/A | 1 |
| 16 | 22 | C/6032-28 | T493C226(1)016(2)(3)(4)(5) | 3.5 | 6.0 | 1.6 | 0.4 | N/A | 1 |
| 16 | 22 | D/7343-31 | T493D226(1)016(2)(3)(4)(5) | 3.5 | 6.0 | 0.8 | 0.3 | N/A | 1 |
| 16 | 33 | C/6032-28 | T493C336(1)016(2)(3)(4)(5) | 5.3 | 6.0 | 1.2 | 0.3 | 0.23 | 1 |
| 16 | 33 | D/7343-31 | T493D336(1)016(2)(3)(4)(5) | 5.3 | 6.0 | 0.8 | 0.25 | 0.15 | 1 |
| 16 | 47 | C/6032-28 | T493C476(1)016(2)(3)(4)(5) | 7.5 | 6.0 | 1.2 | 0.5 | 0.35 | 1 |
| 16 | 47 | D/7343-31 | T493D476(1)016(2)(3)(4)(5) | 7.5 | 6.0 | 0.8 | 0.2 | 0.10 | 1 |
| 16 | 68 | D/7343-31 | T493D686(1)016(2)(3)(4)(5) | 10.9 | 6.0 | 0.7 | 0.2 | 0.15 | 1 |
| 16 | 100 | D/7343-31 | T493D107(1)016(2)(3)(4)(5) | 16.0 | 8.0 | 0.7 | 0.125 | 0.10 | 1 |
| 16 | 100 | X/7343-43 | T493X107(1)016(2)(3)(4)(5) | 16.0 | 8.0 | 0.7 | 0.1 | 0.08 | 1 |
| 16 | 150 | D/7343-31 | T493D157(1)016(2)(3)(4)(5) | 24.0 | 8.0 | 0.7 | 0.4 | 0.15 | 1 |
| 16 | 150 | X/7343-43 | T493X157(1)016(2)(3)(4)(5) | 24.0 | 8.0 | 0.5 | 0.2 | 0.10 | 1 |
| 16 | 220 | X/7343-43 | T493X227(1)016(2)(3)(4)(5) | 35.2 | 12.0 | 0.5 | 0.2 | 0.10 | 1 |
| 20 | 0.47 | A/3216-18 | T493A474(1)020(2)(3)(4)(5) | 0.1 | 4.0 | 14.0 | 9.0 | N/A | 1 |
| 20 | 0.68 | A/3216-18 | T493A684(1)020(2)(3)(4)(5) | 0.1 | 4.0 | 12.0 | 8.0 | N/A | 1 |
| 20 | 1 | A/3216-18 | T493A105(1)020(2)(3)(4)(5) | 0.2 | 4.0 | 10.0 | 5.5 | N/A | 1 |
| 20 | 1.5 | A/3216-18 | T493A155(1)020(2)(3)(4)(5) | 0.3 | 6.0 | 8.0 | 4.5 | N/A | 1 |
| 20 | 1.5 | B/3528-21 | T493B155(1)020(2)(3)(4)(5) | 0.3 | 6.0 | 6.0 | 4.0 | N/A | 1 |
| 20 | 2.2 | A/3216-18 | T493A225(1)020(2)(3)(4)(5) | 0.4 | 6.0 | 7.0 | 4.0 | N/A | 1 |
| 20 | 2.2 | B/3528-21 | T493B225(1)020(2)(3)(4)(5) | 0.4 | 6.0 | 3.5 | 1.5 | N/A | 1 |
| 20 | 3.3 | A/3216-18 | T493A335(1)020(2)(3)(4)(5) | 0.7 | 6.0 | 7.0 | 4.0 | N/A | 1 |
| 20 | 3.3 | B/3528-21 | T493B335(1)020(2)(3)(4)(5) | 0.7 | 6.0 | 3.5 | 1.3 | N/A | 1 |
| 20 | 4.7 | A/3216-18 | T493A475(1)020(2)(3)(4)(5) | 0.9 | 8.0 | 6.0 | 1.8 | N/A | 1 |
| 20 | 4.7 | B/3528-21 | T493B475(1)020(2)(3)(4)(5) | 0.9 | 6.0 | 3.5 | 1.0 | N/A | 1 |
| 20 | 4.7 | C/6032-28 | T493C475(1)020(2)(3)(4)(5) | 0.9 | 6.0 | 2.4 | 0.6 | N/A | 1 |
| 20 | 6.8 | B/3528-21 | T493B685(1)020(2)(3)(4)(5) | 1.4 | 6.0 | 3.5 | 1.0 | N/A | 1 |
| 20 | 6.8 | C/6032-28 | T493C685(1)020(2)(3)(4)(5) | 1.4 | 6.0 | 1.9 | 0.6 | N/A | 1 |
| 20 | 10 | B/3528-21 | T493B106(1)020(2)(3)(4)(5) | 2.0 | 6.0 | 3.0 | 1.0 | 1.0 | 1 |
| 20 | 10 | C/6032-28 | T493C106(1)020(2)(3)(4)(5) | 2.0 | 6.0 | 1.8 | 0.5 | 0.48 | 1 |
| 20 | 15 | C/6032-28 | T493C156(1)020(2)(3)(4)(5) | 3.0 | 6.0 | 1.7 | 0.4 | 0.38 | 1 |
| 20 | 15 | D/7343-31 | T493D156(1)020(2)(3)(4)(5) | 3.0 | 6.0 | 1.0 | 0.35 | 0.28 | 1 |
| 20 | 22 | C/6032-28 | T493C226(1)020(2)(3)(4)(5) | 4.4 | 6.0 | 1.2 | 0.4 | N/A | 1 |
| 20 | 22 | D/7343-31 | T493D226(1)020(2)(3)(4)(5) | 4.4 | 6.0 | 0.8 | 0.3 | 0.18 | 1 |
| 20 | 33 | D/7343-31 | T493D336(1)020(2)(3)(4)(5) | 6.6 | 6.0 | 0.8 | 0.2 | 0.15 | 1 |
| VDC | µF | KEMET/EIA | (See below for part options) | max/5min | % Max | Ohms | Ohms | Ohms | J-STD-020D |
| 85ºC | 120Hz | | | µAmps +20ºC | +20ºC 120Hz | +20ºC 100kHz | +20ºC 100kHz | +20ºC 100kHz | Temp≤260ºC |
| Rated Voltage | Rated Cap | Case Code/ Case Size | KEMET Part Number | DC Leakage | DF | Standard ESR | Low ESR | Ultra-low ESR | Moisture Sensitivity |

*(1) To complete KEMET part number, insert M for ± 20%, K for ± 10% or J for 5%. Designates Capacitance tolerance.*

*(2) To complete KEMET part number, insert B (0.1%/1000Hrs), C (0.01%/1000Hrs) or A = N/A. Designates Reliability Level.*

*(3) To complete KEMET part number, insert B = Gold Plated, C = Hot solder dipped, H = Solder Plated, K = Solder Fused or T = 100% Tin (Sn). Designates Termination Finish.*

*(4) To complete KEMET part number, insert 61 = None, 62 = 10 cycles +25°C, 63 = 10 cycles -55°C +85°C after Weibull or 64 = 10 cycles -55°C +85°C before Weibull. Designates Surge current option.*

*(5) To complete KEMET part number, insert 10 = Standard ESR, 20 = Low ESR or 30 = Ultra Low ESR. Designates ESR option.*

*Refer to Ordering Information for additional detail.*



Roll Over for Order Info.

## Table 1A – Ratings & Part Number Reference con't

| Rated Voltage | Rated Cap | Case Code/ Case Size | KEMET Part Number | DC Leakage | DF | Standard ESR | Low ESR | Ultra-low ESR | Moisture Sensitivity |
|---|---|---|---|---|---|---|---|---|---|
| 85°C | 120Hz | KEMET/EIA | (See below for part options) | µAmps +20°C | +20°C 120Hz | +20°C 100kHz | +20°C 100kHz | +20°C 100kHz | Temp≤260°C |
| VDC | µF | | | max/5min | % Max | Ohms | Ohms | Ohms | J-STD-020D |
| 20 | 47 | D/7343-31 | T493D476(1)020(2)(3)(4)(5) | 9.4 | 6.0 | 0.7 | 0.2 | 0.10 | 1 |
| 20 | 47 | X/7343-43 | T493X476(1)020(2)(3)(4)(5) | 9.4 | 4.0 | 0.7 | 0.15 | 0.10 | 1 |
| 20 | 68 | D/7343-31 | T493D686(1)020(2)(3)(4)(5) | 13.6 | 8.0 | 0.7 | 0.2 | 0.15 | 1 |
| 20 | 68 | X/7343-43 | T493X686(1)020(2)(3)(4)(5) | 13.6 | 6.0 | 0.7 | 0.15 | 0.12 | 1 |
| 25 | 0.33 | A/3216-18 | T493A334(1)025(2)(3)(4)(5) | 0.1 | 4.0 | 15.0 | 10.0 | N/A | 1 |
| 25 | 0.47 | A/3216-18 | T493A474(1)025(2)(3)(4)(5) | 0.1 | 4.0 | 14.0 | 9.0 | N/A | 1 |
| 25 | 0.68 | A/3216-18 | T493A684(1)025(2)(3)(4)(5) | 0.2 | 4.0 | 10.0 | 6.0 | N/A | 1 |
| 25 | 0.68 | B/3528-21 | T493B684(1)025(2)(3)(4)(5) | 0.2 | 4.0 | 7.5 | 5.5 | N/A | 1 |
| 25 | 1 | A/3216-18 | T493A105(1)025(2)(3)(4)(5) | 0.3 | 4.0 | 8.0 | 4.0 | N/A | 1 |
| 25 | 1 | B/3528-21 | T493B105(1)025(2)(3)(4)(5) | 0.3 | 4.0 | 5.0 | 2.0 | N/A | 1 |
| 25 | 1.5 | A/3216-18 | T493A155(1)025(2)(3)(4)(5) | 0.4 | 6.0 | 10.0 | 3.0 | N/A | 1 |
| 25 | 1.5 | B/3528-21 | T493B155(1)025(2)(3)(4)(5) | 0.4 | 6.0 | 5.0 | 1.5 | N/A | 1 |
| 25 | 2.2 | B/3528-21 | T493B225(1)025(2)(3)(4)(5) | 0.6 | 6.0 | 4.5 | 1.2 | N/A | 1 |
| 25 | 2.2 | C/6032-28 | T493C225(1)025(2)(3)(4)(5) | 0.6 | 6.0 | 3.5 | 2.2 | 1.30 | 1 |
| 25 | 3.3 | B/3528-21 | T493B335(1)025(2)(3)(4)(5) | 0.8 | 6.0 | 3.5 | 2.0 | N/A | 1 |
| 25 | 3.3 | C/6032-28 | T493C335(1)025(2)(3)(4)(5) | 0.8 | 6.0 | 2.5 | 1.2 | 0.75 | 1 |
| 25 | 4.7 | B/3528-21 | T493B475(1)025(2)(3)(4)(5) | 1.2 | 6.0 | 1.5 | 1.0 | N/A | 1 |
| 25 | 4.7 | C/6032-28 | T493C475(1)025(2)(3)(4)(5) | 1.2 | 6.0 | 2.4 | 0.6 | 0.58 | 1 |
| 25 | 6.8 | C/6032-28 | T493C685(1)025(2)(3)(4)(5) | 1.7 | 6.0 | 1.9 | 0.6 | 0.49 | 1 |
| 25 | 6.8 | D/7343-31 | T493D685(1)025(2)(3)(4)(5) | 1.7 | 6.0 | 1.4 | 1.0 | N/A | 1 |
| 25 | 10 | C/6032-28 | T493C106(1)025(2)(3)(4)(5) | 2.5 | 6.0 | 1.5 | 0.5 | 0.45 | 1 |
| 25 | 10 | D/7343-31 | T493D106(1)025(2)(3)(4)(5) | 2.5 | 6.0 | 1.0 | 0.4 | N/A | 1 |
| 25 | 15 | C/6032-28 | T493C156(1)025(2)(3)(4)(5) | 3.8 | 6.0 | 1.5 | 0.9 | N/A | 1 |
| 25 | 15 | D/7343-31 | T493D156(1)025(2)(3)(4)(5) | 3.8 | 6.0 | 1.0 | 0.35 | 0.28 | 1 |
| 25 | 15 | X/7343-43 | T493X156(1)025(2)(3)(4)(5) | 3.8 | 6.0 | 0.7 | 0.2 | 0.20 | 1 |
| 25 | 22 | D/7343-31 | T493D226(1)025(2)(3)(4)(5) | 5.5 | 6.0 | 0.8 | 0.2 | 0.20 | 1 |
| 25 | 22 | X/7343-43 | T493X226(1)025(2)(3)(4)(5) | 5.5 | 4.0 | 0.7 | 0.23 | 0.23 | 1 |
| 25 | 33 | D/7343-31 | T493D336(1)025(2)(3)(4)(5) | 8.3 | 6.0 | 0.7 | 0.4 | 0.09 | 1 |
| 25 | 33 | X/7343-43 | T493X336(1)025(2)(3)(4)(5) | 8.3 | 6.0 | 0.7 | 0.3 | 0.18 | 1 |
| 25 | 47 | D/7343-31 | T493D476(1)025(2)(3)(4)(5) | 11.8 | 10.0 | 0.7 | 0.2 | 0.12 | 1 |
| 25 | 47 | X/7343-43 | T493X476(1)025(2)(3)(4)(5) | 11.8 | 6.0 | 0.7 | 0.3 | 0.15 | 1 |
| 35 | 0.1 | A/3216-18 | T493A104(1)035(2)(3)(4)(5) | 0.0 | 4.0 | 20.0 | 10.0 | N/A | 1 |
| 35 | 0.15 | A/3216-18 | T493A154(1)035(2)(3)(4)(5) | 0.1 | 4.0 | 19.0 | 6.0 | N/A | 1 |
| 35 | 0.22 | A/3216-18 | T493A224(1)035(2)(3)(4)(5) | 0.1 | 4.0 | 18.0 | 6.0 | N/A | 1 |
| 35 | 0.33 | A/3216-18 | T493A334(1)035(2)(3)(4)(5) | 0.1 | 4.0 | 15.0 | 6.0 | N/A | 1 |
| 35 | 0.47 | A/3216-18 | T493A474(1)035(2)(3)(4)(5) | 0.2 | 4.0 | 14.0 | 4.0 | N/A | 1 |
| 35 | 0.47 | B/3528-21 | T493B474(1)035(2)(3)(4)(5) | 0.2 | 4.0 | 8.0 | 2.5 | 1.5 | 1 |
| 35 | 0.68 | A/3216-18 | T493A684(1)035(2)(3)(4)(5) | 0.2 | 4.0 | 10.0 | 6.0 | N/A | 1 |
| 35 | 0.68 | B/3528-21 | T493B684(1)035(2)(3)(4)(5) | 0.2 | 4.0 | 6.5 | 2.5 | N/A | 1 |
| 35 | 1 | A/3216-18 | T493A105(1)035(2)(3)(4)(5) | 0.4 | 4.0 | 10.0 | 6.0 | N/A | 1 |
| 35 | 1 | B/3528-21 | T493B105(1)035(2)(3)(4)(5) | 0.4 | 4.0 | 5.0 | 2.0 | 1.5 | 1 |
| 35 | 1.5 | B/3528-21 | T493B155(1)035(2)(3)(4)(5) | 0.5 | 6.0 | 5.0 | 3.0 | N/A | 1 |
| 35 | 1.5 | C/6032-28 | T493C155(1)035(2)(3)(4)(5) | 0.5 | 6.0 | 4.5 | 2.5 | N/A | 1 |
| 35 | 2.2 | B/3528-21 | T493B225(1)035(2)(3)(4)(5) | 0.8 | 6.0 | 4.0 | 2.5 | 1.5 | 1 |
| 35 | 2.2 | C/6032-28 | T493C225(1)035(2)(3)(4)(5) | 0.8 | 6.0 | 3.5 | 1.5 | 0.75 | 1 |
| 35 | 3.3 | B/3528-21 | T493B335(1)035(2)(3)(4)(5) | 1.2 | 6.0 | 3.5 | 1.3 | N/A | 1 |
| 35 | 3.3 | C/6032-28 | T493C335(1)035(2)(3)(4)(5) | 1.2 | 6.0 | 2.5 | 0.8 | 0.60 | 1 |
| VDC | µF | KEMET/EIA | (See below for part options) | max/5min | % Max | Ohms | Ohms | Ohms | J-STD-020D |
| 85°C | 120Hz | | | µAmps +20°C | +20°C 120Hz | +20°C 100kHz | +20°C 100kHz | +20°C 100kHz | Temp≤260°C |
| Rated Voltage | Rated Cap | Case Code/ Case Size | KEMET Part Number | DC Leakage | DF | Standard ESR | Low ESR | Ultra-low ESR | Moisture Sensitivity |

*(1) To complete KEMET part number, insert M for ± 20%, K for ± 10% or J for 5%. Designates Capacitance tolerance.*

*(2) To complete KEMET part number, insert B (0.1%/1000Hrs), C (0.01%/1000Hrs) or A = N/A. Designates Reliability Level.*

*(3) To complete KEMET part number, insert B = Gold Plated, C = Hot solder dipped, H = Solder Plated, K = Solder Fused or T = 100% Tin (Sn). Designates Termination Finish.*

*(4) To complete KEMET part number, insert 61 = None, 62 = 10 cycles +25°C, 63 = 10 cycles -55°C +85°C after Weibull or 64 = 10 cycles -55°C +85°C before Weibull. Designates Surge current option.*

*(5) To complete KEMET part number, insert 10 = Standard ESR, 20 = Low ESR or 30 = Ultra Low ESR. Designates ESR option.*

*Refer to Ordering Information for additional detail.*



Roll Over for Order Info.

## Table 1A – Ratings & Part Number Reference con't

| Rated Voltage | Rated Cap | Case Code/ Case Size | KEMET Part Number | DC Leakage | DF | Standard ESR | Low ESR | Ultra-low ESR | Moisture Sensitivity |
|---|---|---|---|---|---|---|---|---|---|
| 85ºC | 120Hz | KEMET/EIA | (See below for part options) | µAmps +20ºC | +20ºC 120Hz | +20ºC 100kHz | +20ºC 100kHz | +20ºC 100kHz | Temp≤260ºC |
| VDC | µF | | | max/5min | % Max | Ohms | Ohms | Ohms | J-STD-020D |
| 35 | 4.7 | C/6032-28 | T493C475(1)035(2)(3)(4)(5) | 1.6 | 6.0 | 2.5 | 0.6 | 0.45 | 1 |
| 35 | 4.7 | D/7343-31 | T493D475(1)035(2)(3)(4)(5) | 1.6 | 6.0 | 1.5 | 0.7 | N/A | 1 |
| 35 | 6.8 | C/6032-28 | T493C685(1)035(2)(3)(4)(5) | 2.4 | 6.0 | 2.0 | 0.9 | N/A | 1 |
| 35 | 6.8 | D/7343-31 | T493D685(1)035(2)(3)(4)(5) | 2.4 | 6.0 | 1.3 | 0.5 | 0.40 | 1 |
| 35 | 10 | C/6032-28 | T493C106(1)035(2)(3)(4)(5) | 3.5 | 6.0 | 2.0 | 1.2 | N/A | 1 |
| 35 | 10 | D/7343-31 | T493D106(1)035(2)(3)(4)(5) | 3.5 | 6.0 | 1.0 | 0.3 | 0.25 | 1 |
| 35 | 10 | X/7343-43 | T493X106(1)035(2)(3)(4)(5) | 3.5 | 4.0 | 0.9 | 0.25 | 0.18 | 1 |
| 35 | 15 | D/7343-31 | T493D156(1)035(2)(3)(4)(5) | 5.3 | 6.0 | 0.8 | 0.3 | 0.23 | 1 |
| 35 | 15 | X/7343-43 | T493X156(1)035(2)(3)(4)(5) | 5.3 | 6.0 | 0.9 | 0.3 | 0.20 | 1 |
| 35 | 22 | D/7343-31 | T493D226(1)035(2)(3)(4)(5) | 7.7 | 6.0 | 0.7 | 0.4 | 0.20 | 1 |
| 35 | 22 | X/7343-43 | T493X226(1)035(2)(3)(4)(5) | 7.7 | 6.0 | 0.7 | 0.3 | 0.20 | 1 |
| 35 | 33 | X/7343-43 | T493X336(1)035(2)(3)(4)(5) | 11.6 | 6.0 | 0.6 | 0.3 | 0.18 | 1 |
| 35 | 47 | E/7260-38 | T493E476(1)035(2)(3)(4)(5) | 16.5 | 10.0 | 0.5 | 0.3 | N/A | 1 |
| 50 | 0.1 | A/3216-18 | T493A104(1)050(2)(3)(4)(5) | 0.1 | 4.0 | 20.0 | 10.0 | N/A | 1 |
| 50 | 0.15 | A/3216-18 | T493A154(1)050(2)(3)(4)(5) | 0.1 | 4.0 | 19.0 | 10.0 | N/A | 1 |
| 50 | 0.15 | B/3528-21 | T493B154(1)050(2)(3)(4)(5) | 0.1 | 4.0 | 16.0 | 10.0 | N/A | 1 |
| 50 | 0.22 | B/3528-21 | T493B224(1)050(2)(3)(4)(5) | 0.1 | 4.0 | 14.0 | 10.0 | N/A | 1 |
| 50 | 0.33 | B/3528-21 | T493B334(1)050(2)(3)(4)(5) | 0.2 | 4.0 | 10.0 | 2.5 | N/A | 1 |
| 50 | 0.47 | B/3528-21 | T493B474(1)050(2)(3)(4)(5) | 0.2 | 4.0 | 9.0 | 2.0 | N/A | 1 |
| 50 | 0.47 | C/6032-28 | T493C474(1)050(2)(3)(4)(5) | 0.2 | 4.0 | 8.0 | 1.8 | N/A | 1 |
| 50 | 0.68 | C/6032-28 | T493C684(1)050(2)(3)(4)(5) | 0.3 | 4.0 | 7.0 | 1.6 | N/A | 1 |
| 50 | 1 | C/6032-28 | T493C105(1)050(2)(3)(4)(5) | 0.5 | 4.0 | 5.5 | 1.6 | 1.3 | 1 |
| 50 | 1.5 | C/6032-28 | T493C155(1)050(2)(3)(4)(5) | 0.8 | 6.0 | 4.5 | 1.5 | N/A | 1 |
| 50 | 1.5 | D/7343-31 | T493D155(1)050(2)(3)(4)(5) | 0.8 | 6.0 | 3.5 | 1.0 | N/A | 1 |
| 50 | 2.2 | C/6032-28 | T493C225(1)050(2)(3)(4)(5) | 1.1 | 6.0 | 3.5 | 1.5 | N/A | 1 |
| 50 | 2.2 | D/7343-31 | T493D225(1)050(2)(3)(4)(5) | 1.1 | 6.0 | 2.5 | 0.8 | 0.60 | 1 |
| 50 | 3.3 | D/7343-31 | T493D335(1)050(2)(3)(4)(5) | 1.7 | 6.0 | 2.0 | 0.8 | 0.70 | 1 |
| 50 | 4.7 | D/7343-31 | T493D475(1)050(2)(3)(4)(5) | 2.4 | 6.0 | 1.5 | 0.6 | 0.28 | 1 |
| 50 | 4.7 | X/7343-43 | T493X475(1)050(2)(3)(4)(5) | 2.4 | 4.0 | 0.9 | 0.3 | 0.30 | 1 |
| 50 | 6.8 | X/7343-43 | T493X685(1)050(2)(3)(4)(5) | 3.4 | 6.0 | 1.0 | 0.5 | N/A | 1 |
| 50 | 10 | X/7343-43 | T493X106(1)050(2)(3)(4)(5) | 5.0 | 6.0 | 0.7 | 0.4 | N/A | 1 |
| VDC | µF | KEMET/EIA | (See below for part options) | max/5min | % Max | Ohms | Ohms | Ohms | J-STD-020D |
| 85ºC | 120Hz | | | µAmps +20ºC | +20ºC 120Hz | +20ºC 100kHz | +20ºC 100kHz | +20ºC 100kHz | Temp≤260ºC |
| Rated Voltage | Rated Cap | Case Code/ Case Size | KEMET Part Number | DC Leakage | DF | Standard ESR | Low ESR | Ultra-low ESR | Moisture Sensitivity |

*(1) To complete KEMET part number, insert M for ± 20%, K for ± 10% or J for 5%. Designates Capacitance tolerance.*

*(2) To complete KEMET part number, insert B (0.1%/1000Hrs), C (0.01%/1000Hrs) or A = N/A. Designates Reliability Level.*

*(3) To complete KEMET part number, insert B = Gold Plated, C = Hot solder dipped, H = Solder Plated, K = Solder Fused or T = 100% Tin (Sn). Designates Termination Finish.*

*(4) To complete KEMET part number, insert 61 = None, 62 = 10 cycles +25°C, 63 = 10 cycles -55°C +85°C after Weibull or 64 = 10 cycles -55°C +85°C before Weibull. Designates Surge current option.*

*(5) To complete KEMET part number, insert 10 = Standard ESR, 20 = Low ESR or 30 = Ultra Low ESR. Designates ESR option.*

*Refer to Ordering Information for additional detail.*



Roll Over for Order Info.

## Table 1B – DSCC 07016, Ratings & Part Number Reference

| Rated Voltage | Rated Cap | Case Code/ Case Size | KEMET Part Number | DSCC Dwg 07016 Part Number | DC Leakage | DF | Standard ESR | Moisture Sensitivity |
|---|---|---|---|---|---|---|---|---|
| 85°C | 120Hz | KEMET/EIA | | | µAmps +20°C | +20°C 120Hz | +20°C 100kHz | Temp≤260°C |
| VDC | µF | | | | max/5min | % Max | Ohms | J-STD-020D |
| 4 | 33 | A/3216-18 | T493A336(1)004(2)(3)(4)20 | 07016-001(1)(2)(3)(4) | 1.4 | 6.0 | 3.0 | 1 |
| 4 | 100 | B/3528-20 | T493B107(1)004(2)(3)(4)20 | 07016-004(1)(2)(3)(4) | 4.0 | 8.0 | 0.9 | 1 |
| 6.3 | 3.3 | A/3216-18 | T493A335(1)006(2)(3)(4)10 | 07016-006(1)(2)(3)(4) | 0.5 | 6.0 | 8.0 | 1 |
| 6.3 | 4.7 | A/3216-18 | T493A475(1)006(2)(3)(4)10 | 07016-007(1)(2)(3)(4) | 0.5 | 6.0 | 6.0 | 1 |
| 6.3 | 6.8 | A/3216-18 | T493A685(1)006(2)(3)(4)20 | 07016-008(1)(2)(3)(4) | 0.5 | 6.0 | 5.0 | 1 |
| 6.3 | 10 | A/3216-18 | T493A106(1)006(2)(3)(4)10 | 07016-009(1)(2)(3)(4) | 0.6 | 6.0 | 4.0 | 1 |
| 6.3 | 15 | A/3216-18 | T493A156(1)006(2)(3)(4)20 | 07016-010(1)(2)(3)(4) | 0.9 | 6.0 | 3.5 | 1 |
| 6.3 | 22 | A/3216-18 | T493A226(1)006(2)(3)(4)20 | 07016-011(1)(2)(3)(4) | 1.4 | 6.0 | 3.0 | 1 |
| 6.3 | 22 | B/3528-20 | T493B226(1)006(2)(3)(4)20 | 07016-012(1)(2)(3)(4) | 1.4 | 6.0 | 0.6 | 1 |
| 6.3 | 33 | B/3528-20 | T493B336(1)006(2)(3)(4)20 | 07016-013(1)(2)(3)(4) | 2.1 | 6.0 | 0.6 | 1 |
| 6.3 | 47 | C/6032-28 | T493C476(1)006(2)(3)(4)20 | 07016-014(1)(2)(3)(4) | 3.0 | 6.0 | 0.3 | 1 |
| 6.3 | 68 | C/6032-28 | T493C686(1)006(2)(3)(4)20 | 07016-016(1)(2)(3)(4) | 4.3 | 6.0 | 0.2 | 1 |
| 6.3 | 100 | C/6032-28 | T493C107(1)006(2)(3)(4)30 | 07016-017(1)(2)(3)(4) | 6.3 | 6.0 | 0.15 | 1 |
| 6.3 | 220 | D/7343-31 | T493D227(1)006(2)(3)(4)20 | 07016-020(1)(2)(3)(4) | 13.9 | 8.0 | 0.1 | 1 |
| 6.3 | 330 | X/7343-43 | T493X337(1)006(2)(3)(4)20 | 07016-021(1)(2)(3)(4) | 20.8 | 8.0 | 0.1 | |
| 10 | 4.7 | A/3216-18 | T493A475(1)010(2)(3)(4)20 | 07016-026(1)(2)(3)(4) | 0.5 | 6.0 | 5.0 | 1 |
| 10 | 6.8 | A/3216-18 | T493A685(1)010(2)(3)(4)20 | 07016-027(1)(2)(3)(4) | 0.7 | 6.0 | 4.0 | 1 |
| 10 | 10 | A/3216-18 | T493A106(1)010(2)(3)(4)10 | 07016-028(1)(2)(3)(4) | 1.0 | 6.0 | 3.0 | 1 |
| 10 | 10 | A/3216-18 | T493A106(1)010(2)(3)(4)20 | 07016-029(1)(2)(3)(4) | 1.0 | 6.0 | 1.8 | 1 |
| 10 | 15 | A/3216-18 | T493A156(1)010(2)(3)(4)30 | 07016-030(1)(2)(3)(4) | 1.6 | 6.0 | 3.2 | 1 |
| 10 | 15 | B/3528-20 | T493B156(1)010(2)(3)(4)20 | 07016-032(1)(2)(3)(4) | 1.6 | 6.0 | 0.6 | 1 |
| 10 | 22 | B/3528-20 | T493B226(1)010(2)(3)(4)20 | 07016-033(1)(2)(3)(4) | 2.2 | 6.0 | 0.7 | 1 |
| 10 | 22 | C/6032-28 | T493C226(1)010(2)(3)(4)30 | 07016-035(1)(2)(3)(4) | 2.2 | 6.0 | 0.3 | 1 |
| 10 | 33 | B/3528-20 | T493B336(1)010(2)(3)(4)10 | 07016-037(1)(2)(3)(4) | 3.3 | 6.0 | 0.6 | 1 |
| 10 | 33 | C/6032-28 | T493C336(1)010(2)(3)(4)20 | 07016-039(1)(2)(3)(4) | 3.3 | 6.0 | 0.5 | 1 |
| 10 | 47 | C/6032-28 | T493C476(1)010(2)(3)(4)20 | 07016-040(1)(2)(3)(4) | 4.7 | 6.0 | 0.3 | 1 |
| 10 | 68 | C/6032-28 | T493C686(1)010(2)(3)(4)20 | 07016-042(1)(2)(3)(4) | 6.8 | 8.0 | 0.3 | 1 |
| 10 | 68 | D/7343-31 | T493D686(1)010(2)(3)(4)30 | 07016-044(1)(2)(3)(4) | 6.8 | 6.0 | 0.15 | 1 |
| 10 | 220 | D/7343-31 | T493D227(1)010(2)(3)(4)30 | 07016-049(1)(2)(3)(4) | 22.0 | 8.0 | 0.15 | 1 |
| 10 | 220 | X/7343-43 | T493X227(1)010(2)(3)(4)30 | 07016-051(1)(2)(3)(4) | 22.0 | 8.0 | 0.05 | 1 |
| 10 | 330 | X/7343-43 | T493X337(1)010(2)(3)(4)20 | 07016-054(1)(2)(3)(4) | 33.0 | 8.0 | 0.1 | 1 |
| 10 | 330 | X/7343-43 | T493X337(1)010(2)(3)(4)30 | 07016-055(1)(2)(3)(4) | 33.0 | 8.0 | 0.05 | 1 |
| 16 | 2.2 | A/3216-18 | T493A225(1)016(2)(3)(4)30 | 07016-060(1)(2)(3)(4) | 0.5 | 6.0 | 5.5 | 1 |
| 16 | 3.3 | A/3216-18 | T493A335(1)016(2)(3)(4)10 | 07016-061(1)(2)(3)(4) | 0.5 | 6.0 | 5.0 | 1 |
| 16 | 3.3 | A/3216-18 | T493A335(1)016(2)(3)(4)20 | 07016-062(1)(2)(3)(4) | 0.5 | 6.0 | 3.5 | 1 |
| 16 | 6.8 | B/3528-20 | T493B685(1)016(2)(3)(4)20 | 07016-065(1)(2)(3)(4) | 1.1 | 6.0 | 1.2 | 1 |
| 16 | 10 | B/3528-20 | T493B106(1)016(2)(3)(4)20 | 07016-067(1)(2)(3)(4) | 1.6 | 6.0 | 0.9 | 1 |
| 16 | 15 | B/3528-20 | T493B156(1)016(2)(3)(4)20 | 07016-068(1)(2)(3)(4) | 2.4 | 6.0 | 0.8 | 1 |
| 16 | 22 | C/6032-28 | T493C226(1)016(2)(3)(4)20 | 07016-071(1)(2)(3)(4) | 3.6 | 6.0 | 0.375 | 1 |
| 16 | 33 | C/6032-28 | T493C336(1)016(2)(3)(4)20 | 07016-074(1)(2)(3)(4) | 5.3 | 6.0 | 0.3 | 1 |
| 16 | 47 | C/6032-28 | T493C476(1)016(2)(3)(4)30 | 07016-076(1)(2)(3)(4) | 7.6 | 6.0 | 0.35 | 1 |
| 16 | 68 | D/7343-31 | T493D686(1)016(2)(3)(4)30 | 07016-079(1)(2)(3)(4) | 10.9 | 6.0 | 0.15 | 1 |
| 16 | 100 | D/7343-31 | T493D107(1)016(2)(3)(4)20 | 07016-080(1)(2)(3)(4) | 16.0 | 6.0 | 0.125 | 1 |
| 16 | 150 | D/7343-31 | T493D157(1)016(2)(3)(4)30 | 07016-082M(1)(2)(3)(4) | 24.0 | 6.0 | 0.15 | 1 |
| 20 | 1.5 | A/3216-18 | T493A155(1)020(2)(3)(4)20 | 07016-086(1)(2)(3)(4) | 0.5 | 6.0 | 6.5 | 1 |
| VDC | µF | KEMET/EIA | See page 2 for Ordering Information | See page 2 for Ordering Information | max/5min | % Max | Ohms | J-STD-020D |
| 85°C | 120Hz | | | | µAmps +20°C | +20°C 120Hz | +20°C 100kHz | Temp≤260°C |
| Rated Voltage | Rated Cap | Case Code/ Case Size | KEMET Part Number | DSCC Dwg 07016 Part Number | DC Leakage | DF | Standard ESR | Moisture Sensitivity |



Roll Over for Order Info.

# Table 1B – DSCC 07016, Ratings & Part Number Reference con't

| Rated Voltage | Rated Cap | Case Code/ Case Size | KEMET Part Number | DSCC Dwg 07016 Part Number | DC Leakage | DF | Standard ESR | Moisture Sensitivity |
|---|---|---|---|---|---|---|---|---|
| 85ºC | 120Hz | KEMET/EIA | | | µAmps +20ºC | +20ºC 120Hz | +20ºC 100kHz | Temp≤260ºC |
| VDC | µF | | | | max/5min | % Max | Ohms | J-STD-020D |
| 20 | 4.7 | A/3216-18 | T493A475(1)020(2)(3)(4)10 | 07016-088(1)(2)(3)(4) | 1.0 | 6.0 | 4.0 | 1 |
| 20 | 4.7 | A/3216-18 | T493A475(1)020(2)(3)(4)20 | 07016-089(1)(2)(3)(4) | 1.0 | 6.0 | 1.8 | 1 |
| 20 | 4.7 | B/3528-20 | T493B475(1)020(2)(3)(4)20 | 07016-090(1)(2)(3)(4) | 2.0 | 6.0 | 1.0 | 1 |
| 20 | 6.8 | B/3528-20 | T493B685(1)020(2)(3)(4)20 | 07016-091(1)(2)(3)(4) | 1.4 | 6.0 | 1.0 | 1 |
| 20 | 10 | B/3528-20 | T493B106(1)020(2)(3)(4)20 | 07016-092(1)(2)(3)(4) | 0.7 | 6.0 | 1.0 | 1 |
| 20 | 10 | C/6032-28 | T493C106(1)020(2)(3)(4)20 | 07016-094(1)(2)(3)(4) | 1.4 | 6.0 | 0.7 | 1 |
| 20 | 15 | C/6032-28 | T493C156(1)020(2)(3)(4)20 | 07016-096(1)(2)(3)(4) | 3.0 | 6.0 | 0.4 | 1 |
| 20 | 22 | C/6032-28 | T493C226(1)020(2)(3)(4)20 | 07016-098(1)(2)(3)(4) | 4.4 | 6.0 | 0.4 | 1 |
| 20 | 33 | D/7343-31 | T493D336(1)020(2)(3)(4)20 | 07016-100(1)(2)(3)(4) | 6.6 | 6.0 | 0.2 | 1 |
| 20 | 47 | D/7343-31 | T493D476(1)020(2)(3)(4)20 | 07016-102(1)(2)(3)(4) | 9.4 | 6.0 | 0.2 | 1 |
| 20 | 68 | D/7343-31 | T493D686(1)020(2)(3)(4)20 | 07016-104(1)(2)(3)(4) | 13.6 | 6.0 | 0.2 | 1 |
| 20 | 68 | X/7343-43 | T493X686(1)020(2)(3)(4)20 | 07016-106(1)(2)(3)(4) | 13.6 | 6.0 | 0.2 | 1 |
| 25 | 0.68 | A/3216-18 | T493A684(1)025(2)(3)(4)10 | 07016-108M(1)(2)(3)(4) | 0.5 | 4.0 | 10.0 | 1 |
| 25 | 1 | A/3216-18 | T493A105(1)025(2)(3)(4)10 | 07016-109(1)(2)(3)(4) | 0.5 | 4.0 | 8.0 | 1 |
| 25 | 1.5 | A/3216-18 | T493A155(1)025(2)(3)(4)10 | 07016-110(1)(2)(3)(4) | 0.5 | 6.0 | 7.5 | 1 |
| 25 | 1.5 | A/3216-18 | T493A155(1)025(2)(3)(4)20 | 07016-111(1)(2)(3)(4) | 0.5 | 6.0 | 3.0 | 1 |
| 25 | 2.2 | B/3528-20 | T493B225(1)025(2)(3)(4)20 | 07016-113(1)(2)(3)(4) | 0.5 | 6.0 | 2.0 | 1 |
| 25 | 3.3 | B/3528-20 | T493B335(1)025(2)(3)(4)20 | 07016-114(1)(2)(3)(4) | 0.5 | 6.0 | 2.0 | 1 |
| 25 | 4.7 | B/3528-20 | T493B475(1)025(2)(3)(4)10 | 07016-116(1)(2)(3)(4) | 1.2 | 6.0 | 1.5 | 1 |
| 25 | 4.7 | B/3528-20 | T493B475(1)025(2)(3)(4)20 | 07016-117(1)(2)(3)(4) | 1.2 | 6.0 | 0.7 | 1 |
| 25 | 6.8 | C/6032-28 | T493C685(1)025(2)(3)(4)20 | 07016-120(1)(2)(3)(4) | 1.7 | 6.0 | 0.7 | 1 |
| 25 | 10 | C/6032-28 | T493C106(1)025(2)(3)(4)10 | 07016-121(1)(2)(3)(4) | 2.5 | 6.0 | 0.5 | 1 |
| 25 | 10 | C/6032-28 | T493C106(1)025(2)(3)(4)20 | 07016-122(1)(2)(3)(4) | 2.5 | 6.0 | 0.3 | 1 |
| 25 | 22 | D/7343-31 | T493D226(1)025(2)(3)(4)20 | 07016-125(1)(2)(3)(4) | 5.5 | 6.0 | 0.2 | 1 |
| 25 | 33 | D/7343-31 | T493D336(1)025(2)(3)(4)20 | 07016-127(1)(2)(3)(4) | 8.3 | 6.0 | 0.3 | 1 |
| 25 | 33 | D/7343-31 | T493D336(1)025(2)(3)(4)30 | 07016-128(1)(2)(3)(4) | 8.3 | 6.0 | 0.09 | 1 |
| 25 | 47 | D/7343-31 | T493D476(1)025(2)(3)(4)20 | 07016-130M(1)(2)(3)(4) | 11.8 | 6.0 | 0.25 | 1 |
| 25 | 47 | D/7343-31 | T493D476(1)025(2)(3)(4)30 | 07016-131M(1)(2)(3)(4) | 11.8 | 6.0 | 0.175 | 1 |
| 35 | 0.47 | A/3216-18 | T493A474(1)035(2)(3)(4)20 | 07016-133M(1)(2)(3)(4) | 0.5 | 4.0 | 12.0 | 1 |
| 35 | 0.68 | A/3216-18 | T493A684(1)035(2)(3)(4)20 | 07016-134M(1)(2)(3)(4) | 0.5 | 4.0 | 8.0 | 1 |
| 35 | 1 | A/3216-18 | T493A105(1)035(2)(3)(4)20 | 07016-135(1)(2)(3)(4) | 0.5 | 4.0 | 7.5 | 1 |
| 35 | 1.5 | B/3528-20 | T493B155(1)035(2)(3)(4)10 | 07016-137(1)(2)(3)(4) | 0.5 | 6.0 | 5.2 | 1 |
| 35 | 2.2 | B/3528-20 | T493B225(1)035(2)(3)(4)30 | 07016-138(1)(2)(3)(4) | 0.8 | 6.0 | 2.0 | 1 |
| 35 | 6.8 | D/7343-31 | T493D685(1)035(2)(3)(4)30 | 07016-143(1)(2)(3)(4) | 2.4 | 6.0 | 0.4 | 1 |
| 35 | 10 | C/6032-28 | T493C106(1)035(2)(3)(4)20 | 07016-144(1)(2)(3)(4) | 3.5 | 6.0 | 1.6 | 1 |
| 35 | 15 | D/7343-31 | T493D156(1)035(2)(3)(4)20 | 07016-147(1)(2)(3)(4) | 5.3 | 6.0 | 0.3 | 1 |
| 35 | 22 | D/7343-31 | T493D226(1)035(2)(3)(4)20 | 07016-149(1)(2)(3)(4) | 7.7 | 6.0 | 0.4 | 1 |
| 35 | 33 | X/7343-43 | T493X336(1)035(2)(3)(4)20 | 07016-154M(1)(2)(3)(4) | 11.6 | 6.0 | 0.3 | 1 |
| 50 | 0.15 | A/3216-18 | T493A154(1)050(2)(3)(4)20 | 07016-157M(1)(2)(3)(4) | 0.5 | 4.0 | 15.0 | 1 |
| 50 | 0.47 | B/3528-20 | T493B474(1)050(2)(3)(4)20 | 07016-160(1)(2)(3)(4) | 0.5 | 4.0 | 9.5 | 1 |
| 50 | 1.5 | C/6032-28 | T493C155(1)050(2)(3)(4)20 | 07016-164(1)(2)(3)(4) | 0.8 | 6.0 | 2.0 | 1 |
| 50 | 1.5 | D/7343-31 | T493D155(1)050(2)(3)(4)20 | 07016-165(1)(2)(3)(4) | 0.8 | 6.0 | 1.5 | 1 |
| 50 | 2.2 | D/7343-31 | T493D225(1)050(2)(3)(4)20 | 07016-166(1)(2)(3)(4) | 1.1 | 6.0 | 1.2 | 1 |
| 50 | 3.3 | D/7343-31 | T493D335(1)050(2)(3)(4)20 | 07016-167(1)(2)(3)(4) | 1.7 | 6.0 | 0.8 | 1 |
| 50 | 4.7 | D/7343-31 | T493D475(1)050(2)(3)(4)30 | 07016-168(1)(2)(3)(4) | 2.4 | 6.0 | 0.3 | 1 |
| 50 | 6.8 | X/7343-43 | T493X685(1)050(2)(3)(4)20 | 07016-171(1)(2)(3)(4) | 3.4 | 6.0 | 0.4 | 1 |
| VDC | µF | KEMET/EIA | See page 2 for Ordering Information | See page 2 for Ordering Information | max/5min | % Max | Ohms | J-STD-020D |
| 85ºC | 120Hz | | | | µAmps +20ºC | +20ºC 120Hz | +20ºC 100kHz | Temp≤260ºC |
| Rated Voltage | Rated Cap | Case Code/ Case Size | KEMET Part Number | DSCC Dwg 07016 Part Number | DC Leakage | DF | Standard ESR | Moisture Sensitivity |



Roll Over for Order Info.

## Recommended Voltage Derating Guidelines

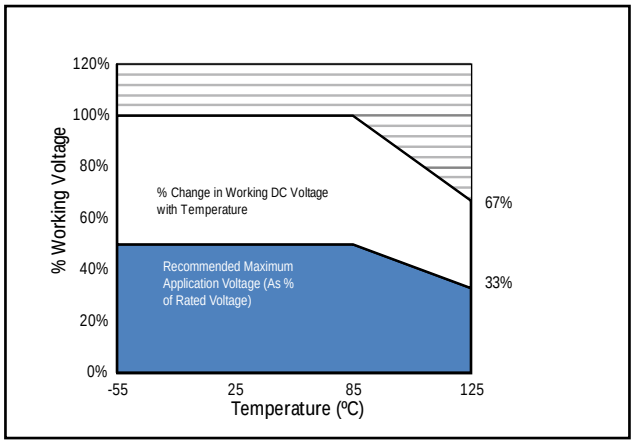


## Ripple Current/Ripple Voltage

| Case Code | | Maximum Power Dissipation (Pmax) mWatts @ 25°C w/+20°C Rise |
|---|---|---|
| KEMET | EIA | |
| A | 3216-18 | 75 |
| B | 3528-21 | 85 |
| C | 6032-28 | 110 |
| D | 7343-31 | 150 |
| X | 7343-43 | 165 |
| E | 7260-38 | 200 |
| R | 2012-12 | 25 |
| S | 3216-12 | 60 |
| T | 3528-12 | 70 |
| U | 6032-15 | 90 |
| V | 7343-20 | 125 |
| T510X | 7343-43 | 270 |
| T510E | 7260-38 | 285 |

| Temperature Compensation Multipliers for Maximum Power Dissipation | | |
|---|---|---|
| ≤25°C | 85°C | 125°C |
| 1.00 | 0.90 | 0.40 |

*T= Environmental Temperature*

Using the P max of the device, the maximum allowable rms ripple current or voltage may be determined.

$I(max) = \sqrt{P\ max/R}$
$E(max) = \sqrt{P\ max*R}$

*I = rms ripple current (amperes)*
*E = rms ripple voltage (volts)*
*Pmax = maximum power dissipation(watts)*
*R = ESR at specified frequency (ohms)*

## Reverse Voltage

Solid tantalum capacitors are polar devices and may be permanently damaged or destroyed if connected with the wrong polarity. The positive terminal is identified on the capacitor body by a stripe plus in some cases a beveled edge. A small degree of transient reverse voltage is permissible for short periods per the table. The capacitors should not be operated continuously in reverse mode, even within these limits.

| Temperature | Permissible Transient Reverse Voltage |
|---|---|
| 25°C | 15% of Rated Voltage |
| 85°C | 5% of Rated Voltage |
| 125°C | 1% of Rated Voltage |

## Table 2 – Land Dimensions/Courtyard

| KEMET | Metric Size Code | Density Level A: Maximum (Most) Land Protrusion (mm) | | | | | Density Level B: Median (Nominal) Land Protrusion (mm) | | | | | Density Level C: Minimum (Least) Land Protrusion (mm) | | | | |
|---|---|---|---|---|---|---|---|---|---|---|---|---|---|---|---|---|
| **Case** | EIA | X | Y | **C** | V1 | V2 | X | Y | **C** | V1 | V2 | X | Y | **C** | V1 | V2 |
| A | 3216-18 | 1.35 | 2.15 | 1.45 | 6.10 | 2.80 | 1.25 | 1.75 | 1.35 | 5.00 | 2.30 | 1.15 | 1.35 | 1.25 | 4.10 | 2.00 |
| B | 3528-21 | 2.35 | 2.15 | 1.45 | 6.10 | 4.00 | 2.25 | 1.75 | 1.35 | 5.00 | 3.50 | 2.15 | 1.35 | 1.25 | 4.10 | 3.20 |
| C | 6032-28 | 2.35 | 2.65 | 2.60 | 8.90 | 4.40 | 2.25 | 2.25 | 2.50 | 7.80 | 3.90 | 2.15 | 1.85 | 2.40 | 6.90 | 3.60 |
| D | 7343-31 | 2.55 | 3.75 | 2.70 | 10.20 | 5.50 | 2.45 | 3.35 | 2.60 | 9.10 | 5.00 | 2.35 | 2.95 | 2.50 | 8.20 | 4.70 |
| E[1] | 7260-38 | 4.25 | 2.65 | 3.20 | 10.10 | 7.20 | 4.15 | 2.25 | 3.30 | 9.40 | 6.70 | 4.05 | 1.85 | 3.00 | 8.10 | 6.40 |
| X[1] | 7343-43 | 2.55 | 3.75 | 2.70 | 10.20 | 5.50 | 2.45 | 3.35 | 2.60 | 9.10 | 5.00 | 2.35 | 2.95 | 2.50 | 8.20 | 4.70 |

*Density Level A: For low-density product applications. Recommended for wave solder applications and provides a wider process window for reflow solder processes.*
*Density Level B: For products with a moderate level of component density. Provides a robust solder attachment condition for reflow solder processes.*
*Density Level C: For high component density product applications. Before adapting the minimum land pattern variations the user should perform qualification testing based on the conditions outlined in IPC standard 7351 (IPC-7351).*
*[1] Height of these chips may create problems in wave soldering.*
*[2] Land pattern geometry is too small for silkscreen outline.*

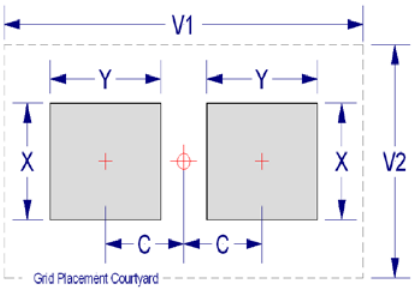

## Soldering Process

KEMET's families of surface mount capacitors are compatible with wave (single or dual), convection, IR or vapor phase reflow techniques. Preheating of these components is recommended to avoid extreme thermal stress. KEMET's recommended profile conditions for convection and IR reflow reflect the profile conditions of the IPC/J-STD-020D standard for moisture sensitivity testing. The devices can safely withstand a maximum of three reflow passes at these conditions.

Note that although the X/7343-43 case size can withstand wave soldering, the tall profile (4.3 mm maximum) dictates care in wave process development.

Hand soldering should be performed with care due to the difficulty in process control. If performed, care should be taken to avoid contact of the soldering iron to the molded case. The iron should be used to heat the solder pad, applying solder between the pad and the termination, until reflow occurs. Once reflow occurred, the iron should be removed immediately. "Wiping" the edges of a chip and heating the top surface is not recommended.

During typical reflow operations, a slight darkening of the gold-colored epoxy may be observed. This slight darkening is normal and is not harmful to the product. Marking permanency is not affected by this change.

| Profile Feature | SnPb Assembly | Pb-Free Assembly |
|---|---|---|
| Preheat/Soak | | |
| Temperature Min ($T_{Smin}$) | 100°C | 150°C |
| Temperature Max ($T_{Smax}$) | 150°C | 200°C |
| Time ($t_s$) from $T_{smin}$ to $T_{smax}$) | 60–120 sec | 60–120 sec |
| Ramp-up Rate ($T_L$ to $T_P$) | 3°C/sec max | 3°C/sec max |
| Liquidous Temperature ($T_L$) | 183°C | 217°C |
| Time Above Liquidous ($t_L$) | 60–150 sec | 60–150 sec |
| Peak Temperature ($T_P$) | 220°C*<br>235°C** | 250°C*<br>260°C** |
| Time within 5°C of Max Peak Temperature ($t_P$) | 20 sec max | 30 sec max |
| Ramp-down Rate ($T_P$ to $T_L$) | 6°C/sec max | 6°C/sec max |
| Time 25°C to Peak Temperature | 6 minutes max | 8 minutes max |

*Note: All temperatures refer to the center of the package, measured on the package body surface that is facing up during assembly reflow.*
**Case Size D, E, P, Y and X*
***Case Size A, B, C, H, I, K, M, R, S, T, U, V, W and Z*

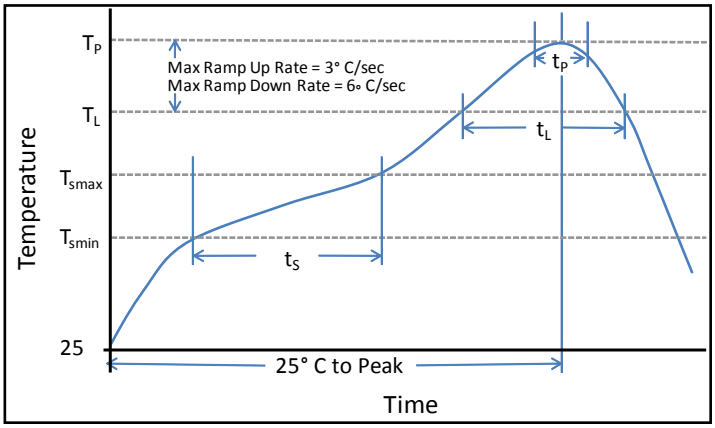


## Construction

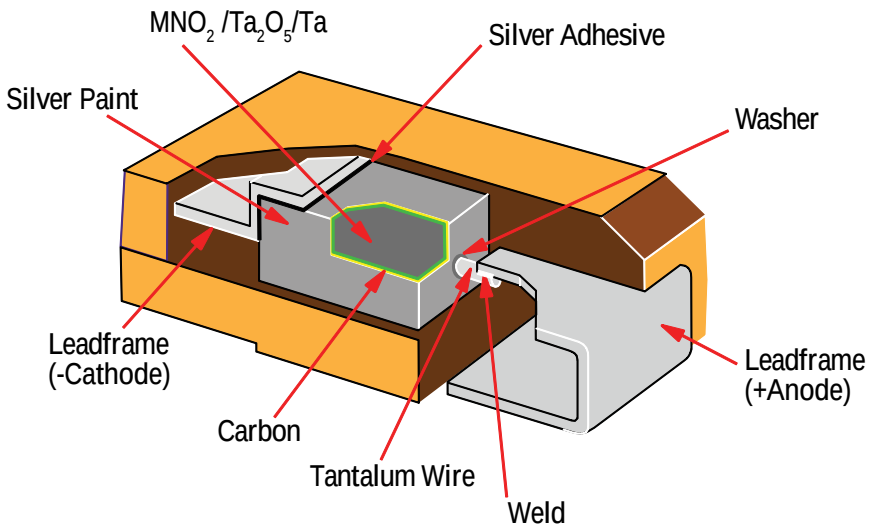

## Capacitor Marking

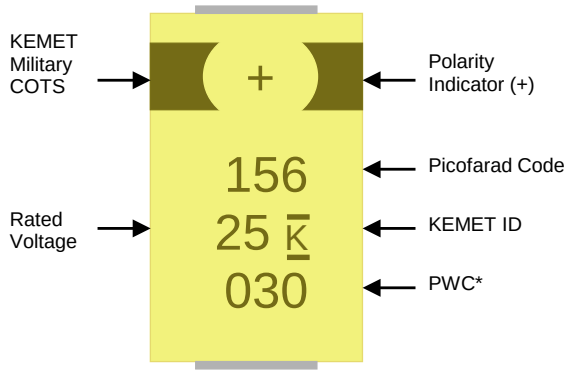


* 030 = 30th week of 2010

## Storage

Tantalum chip capacitors should be stored in normal working environments. While the chips themselves are quite robust in other environments, solderability will be degraded by exposure to high temperatures, high humidity, corrosive atmospheres, and long term storage. In addition, packaging materials will be degraded by high temperature - reels may soften or warp, and tape peel force may increase. KEMET recommends that maximum storage temperature not exceed 40ºC, and maximum storage humidity not exceed 60% relative humidity. In addition, temperature fluctuations should be minimized to avoid condensation on the parts, and atmospheres should be free of chlorine and sulphur bearing compounds. For optimized solderability, chip stock should be used promptly, preferably within three years of receipt.

## Tape & Reel Packaging Information

KEMET's Molded Tantalum and Aluminum Chip Capacitor families are packaged in 8 mm and 12 mm plastic tape on 7" and 13" reels, in accordance with EIA Standard 481-1: Taping of Surface Mount Components for Automatic Handling. This packaging system is compatible with all tape fed automatic pick and place systems.

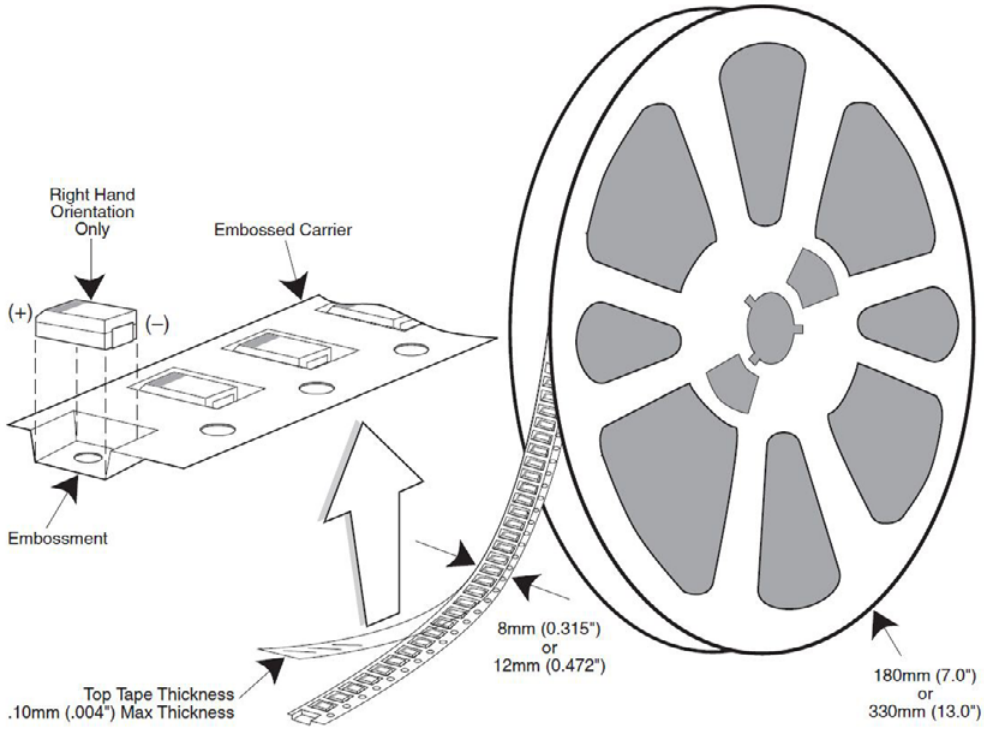


## Table 3 – Packaging Quantity

| Case Code | | Tape Width-mm | 7" Reel* | 13" Reel* |
|---|---|---|---|---|
| KEMET | EIA | | | |
| R | 2012-12 | 8 | 2,500 | 10,000 |
| I | 3216-10 | 8 | 3,000 | 12,000 |
| S | 3216-12 | 8 | 2,500 | 10,000 |
| T | 3528-12 | 8 | 2,500 | 10,000 |
| M | 3528-15 | 8 | 2,000 | 8,000 |
| U | 6032-15 | 12 | 1,000 | 5,000 |
| L | 6032-19 | 12 | 1,000 | 5,000 |
| W | 7343-15 | 12 | 1,000 | 3,000 |
| Z | 7343-17 | 12 | 1,000 | 3,000 |
| V | 7343-20 | 12 | 1,000 | 3,000 |
| A | 3216-18 | 8 | 2,000 | 9,000 |
| B | 3528-21 | 8 | 2,000 | 8,000 |
| C | 6032-28 | 12 | 500 | 3,000 |
| D | 7343-31 | 12 | 500 | 2,500 |
| Y | 7343-40 | 12 | 500 | 2,000 |
| X | 7343-43 | 12 | 500 | 2,000 |
| E | 7260-38 | 12 | 500 | 2,000 |

** No c-spec required for 7" reel packaging. C-7280 required for 13" reel packaging.*

## Figure 1 – Embossed (Plastic) Carrier Tape Dimensions

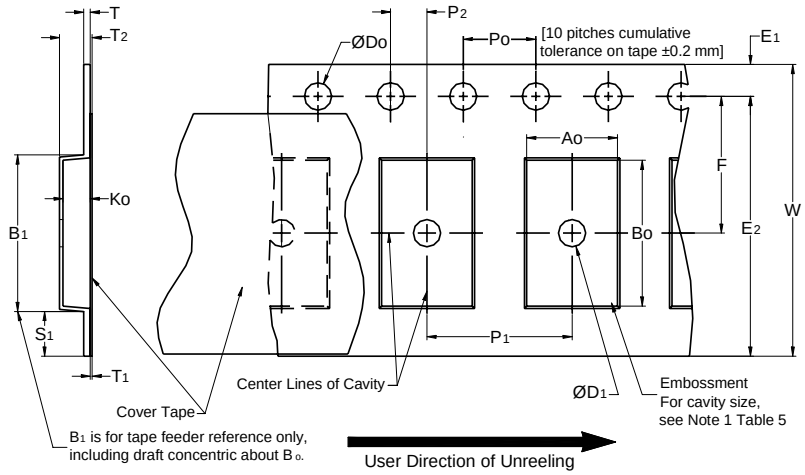


## Table 4 – Embossed (Plastic) Carrier Tape Dimensions

Metric will govern

| Constant Dimensions — Millimeters (Inches) | | | | | | | | | |
|---|---|---|---|---|---|---|---|---|---|
| Tape Size | $D_0$ | $D_1$ Min. Note 1 | $E_1$ | $P_0$ | $P_2$ | R Ref. Note 2 | $S_1$ Min. Note 3 | T Max. | $T_1$ Max. |
| 8mm | 1.5 +0.10/-0.0 (0.059 +0.004/-0.0) | 1.0 (0.039) | 1.75 ± 0.10 (0.069 ± 0.004) | 4.0 ± 0.10 (0.157 ± 0.004) | 2.0 ± 0.05 (0.079 ± 0.002) | 25.0 (0.984) | 0.600 (0.024) | 0.600 (0.024) | 0.100 (0.004) |
| 12mm | | 1.5 (0.059) | | | | 30 (1.181) | | | |
| 16mm | | | | | | | | | |

| Variable Dimensions — Millimeters (Inches) | | | | | | | | |
|---|---|---|---|---|---|---|---|---|
| Tape Size | Pitch | $B_1$ Max. Note 4 | $E_2$ Min. | F | $P_1$ | $T_2$ Max | W Max | $A_0$,$B_0$ & $K_0$ |
| 8mm | Single (4mm) | 4.35 (0.171) | 6.25 (0.246) | 3.5 ± 0.05 (0.138 ± 0.002) | 4.0 ± 0.10 (0.157 ± 0.004) | 2.5 (0.098) | 8.3 (0.327) | Note 5 |
| 12mm | Single (4mm) & Double (8mm) | 8.2 (0.323) | 10.25 (0.404) | 5.5 ± 0.05 (0.217 ± 0.002) | 8.0 ± 0.10 (0.315 ± 0.004) | 4.6 (0.181) | 12.3 (0.484) | |
| 16mm | Triple (12mm) | 12.1 (0.476) | 14.25 (0.561) | 5.5 ± 0.05 (0.217 ± 0.002) | 8.0 ± 0.10 (0.315 ± 0.004) | 4.6 (0.181) | 16.3 (0.642) | |

*1. The embossment hole location shall be measured from the sprocket hole controlling the location of the embossment. Dimensions of embossment location and hole location shall be applied independent of each other.*

*2. The tape with or without components shall pass around R without damage (see Figure 5).*

*3. If $S_1$<1.0 mm, there may not be enough area for cover tape to be properly applied (see EIA Document 481 paragraph 4.3 (b)).*

*4. $B_1$ dimension is a reference dimension for tape feeder clearance only.*

*5. The cavity defined by $A_0$, $B_0$ and $K_0$ shall surround the component with sufficient clearance that:*

*(a) the component does not protrude above the top surface of the carrier tape.*

*(b) the component can be removed from the cavity in a vertical direction without mechanical restriction, after the top cover tape has been removed.*

*(c) rotation of the component is limited to 20° maximum for 8 and 12mm tapes and 10° maximum for 16mm tapes (see Figure 3).*

*(d) lateral movement of the component is restricted to 0.5 mm maximum for 8mm and 12mm wide tape and to 1.0mm maximum for 16mm tape (see Figure 4).*

*(e) see Addendum in EIA Document 481 for standards relating to more precise taping requirements.*

## Packaging Information Performance Notes

1. **Cover Tape Break Force:** *1.0 Kg minimum.*
2. **Cover Tape Peel Strength:** *The total peel strength of the cover tape from the carrier tape shall be:*

| Tape Width | Peel Strength |
|---|---|
| 8mm | 0.1 Newton to 1.0 Newton (10gf to 100gf) |
| 12mm & 16mm | 0.1 Newton to 1.3 Newton (10gf to 130gf) |

*The direction of the pull shall be opposite the direction of the carrier tape travel. The pull angle of the carrier tape shall be 165° to 180° from the plane of the carrier tape. During peeling, the carrier and/or cover tape shall be pulled at a velocity of 300±10 mm/minute.*

3. **Labeling:** *Bar code labeling (standard or custom) shall be on the side of the reel opposite the sprocket holes. Refer to EIA-556 and EIA-624.*

## Figure 2 – Maximum Component Rotation

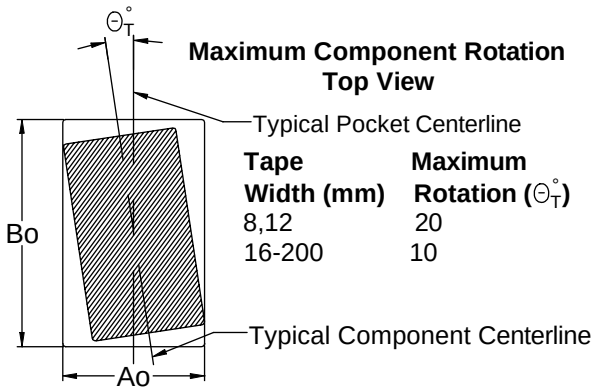


| Tape Width (mm) | Maximum Rotation ($\Theta_T^\circ$) |
|---|---|
| 8,12 | 20 |
| 16-200 | 10 |

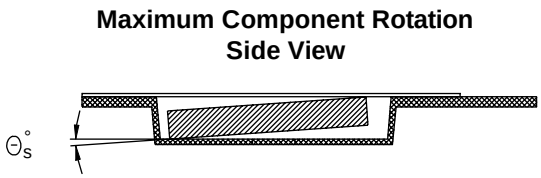


| Tape Width (mm) | Maximum Rotation ($\Theta_S^\circ$) |
|---|---|
| 8,12 | 20 |
| 16-56 | 10 |
| 72-200 | 5 |

## Figure 3 – Maximum Lateral Movement

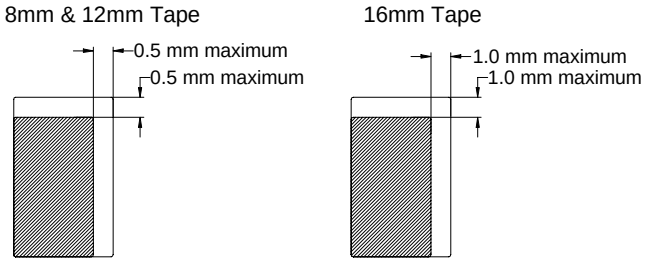


## Figure 4 – Bending Radius

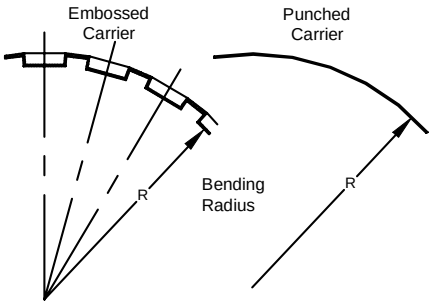

## Figure 5 – Reel Dimensions

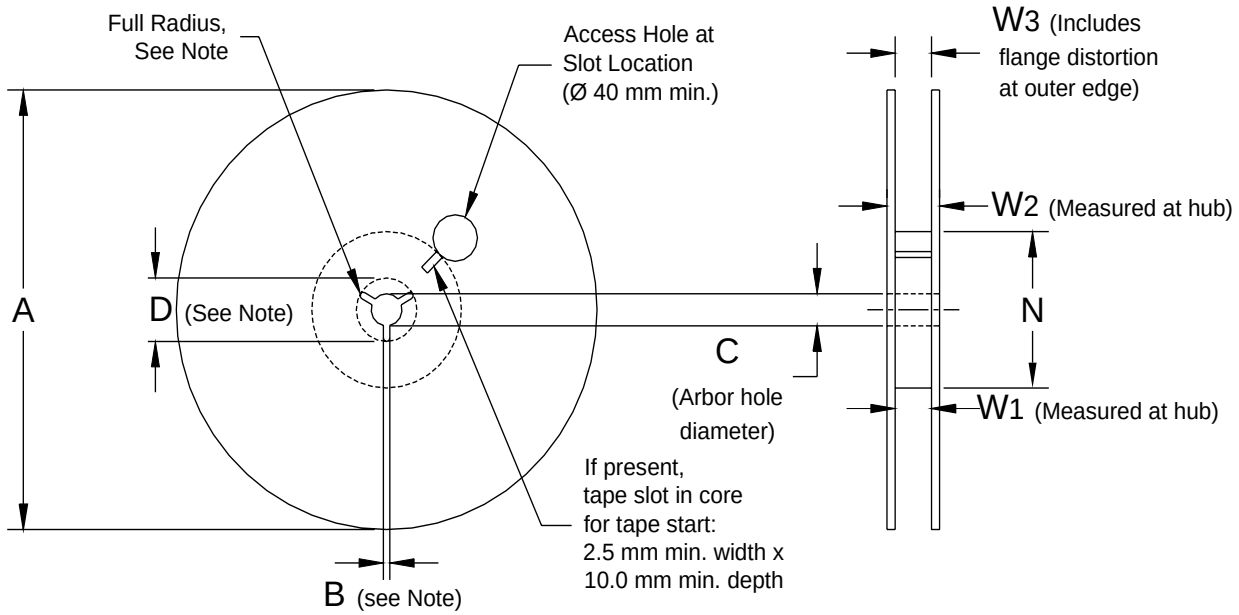


Note: Drive spokes optional; if used, dimensions B and D shall apply.

## Table 5 – Reel Dimensions

Metric will govern

| Constant Dimensions — Millimeters (Inches) | | | | |
|---|---|---|---|---|
| Tape Size | A | B Min | C | D Min |
| 8mm | 178 ± 0.20 (7.008 ± 0.008) or 330 ± 0.20 (13.000 ± 0.008) | 1.5 (0.059) | 13.0 +0.5/-0.2 (0.521 +0.02/-0.008) | 20.2 (0.795) |
| 12mm | | | | |
| 16mm | | | | |

| Variable Dimensions — Millimeters (Inches) | | | | |
|---|---|---|---|---|
| Tape Size | N Min | $W_1$ | $W_2$ Max | $W_3$ |
| 8mm | 50 (1.969) | 8.4 +1.5/-0.0 (0.331 +0.059/-0.0) | 14.4 (0.567) | Shall accommodate tape width without interference |
| 12mm | | 12.4 +2.0/-0.0 (0.488 +0.078/-0.0) | 18.4 (0.724) | |
| 16mm | | 16.4 +2.0/-0.0 (0.646 +0.078/-0.0) | 22.4 (0.882) | |

## Figure 6 – Tape Leader & Trailer Dimensions

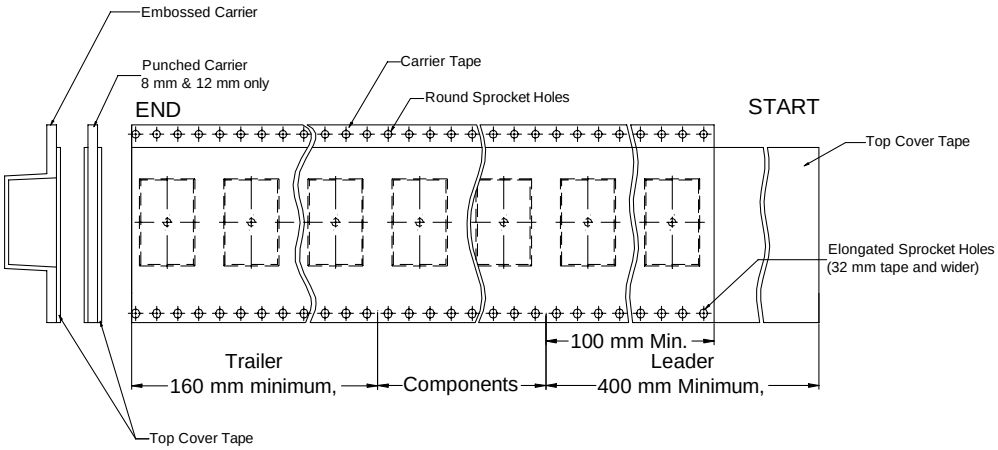


## Figure 7 – Maximum Camber

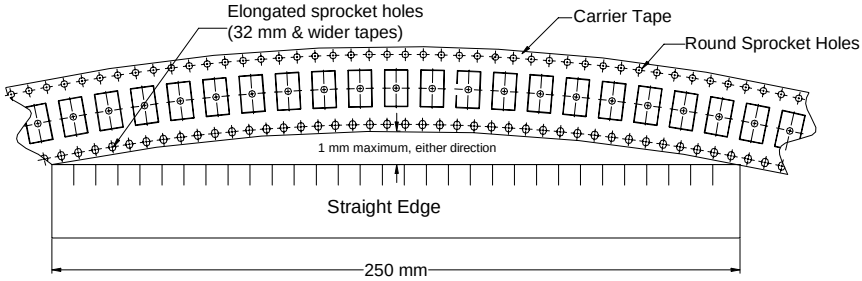

## KEMET Corporation World Headquarters

2835 KEMET Way
Simpsonville, SC 29681

Mailing Address:
P.O. Box 5928
Greenville, SC 29606

www.kemet.com
Tel: 864-963-6300
Fax: 864-963-6521

**Corporate Offices**
Fort Lauderdale, FL
Tel: 954-766-2800

## North America

**Southeast**
Lake Mary, FL
Tel: 407-855-8886

**Northeast**
Wilmington, MA
Tel: 978-658-1663

West Chester, PA
Tel: 610-692-4642

**Central**
Schaumburg, IL
Tel: 847-882-3590

Carmel, IN
Tel: 317-706-6742

**West**
Milpitas, CA
Tel: 408-433-9950

**Mexico**
Zapopan, Jalisco
Tel: 52-33-3123-2141

## Europe

**Southern Europe**
Geneva, Switzerland
Tel: 41-22-715-0100

Paris, France
Tel: 33-1-4646-1009

Sasso Marconi, Italy
Tel: 39-051-939111

Milan, Italy
Tel: 39-02-57518176

Rome, Italy
Tel: 39-06-23231718

Madrid, Spain
Tel: 34-91-804-4303

**Central Europe**
Landsberg, Germany
Tel: 49-8191-3350800

Dortmund, Germany
Tel: 49-2307-3619672

Kwidzyn, Poland
Tel: 48-55-279-7025

**Northern Europe**
Bishop's Stortford, United Kingdom
Tel: 44-1279-757201

Weymouth, United Kingdom
Tel: 44-1305-830747

Coatbridge, Scotland
Tel: 44-1236-434455

Färjestaden, Sweden
Tel: 46-485-563934

Espoo, Finland
Tel: 358-9-5406-5000

## Asia

**Northeast Asia**
Hong Kong
Tel: 852-2305-1168

Shenzhen, China
Tel: 86-755-2518-1306

Beijing, China
Tel: 86-10-5829-1711

Shanghai, China
Tel: 86-21-6447-0707

Taipei, Taiwan
Tel: 886-2-27528585

**Southeast Asia**
Singapore
Tel: 65-6586-1900

Penang, Malaysia
Tel: 60-4-6430200

Bangalore, India
Tel: 91-806-53-76817

*Note: KEMET reserves the right to modify minor details of internal and external construction at any time in the interest of product improvement. KEMET does not assume any responsibility for infringement that might result from the use of KEMET Capacitors in potential circuit designs. KEMET is a registered trademark of KEMET Electronics Corporation.*

## Other KEMET Resources

| Tools | |
|---|---|
| Resource | Location |
| Configure A Part: CapEdge | http://capacitoredge.kemet.com |
| SPICE & FIT Software | http://www.kemet.com/spice |
| Search Our FAQs: KnowledgeEdge | http://www.kemet.com/keask |

| Product Information | |
|---|---|
| Resource | Location |
| Products | http://www.kemet.com/products |
| Technical Resources (Including Soldering Techniques) | http://www.kemet.com/technicalpapers |
| RoHS Statement | http://www.kemet.com/rohs |
| Quality Documents | http://www.kemet.com/qualitydocuments |

| Product Request | |
|---|---|
| Resource | Location |
| Sample Request | http://www.kemet.com/sample |
| Engineering Kit Request | http://www.kemet.com/kits |

| Contact | |
|---|---|
| Resource | Location |
| Website | www.kemet.com |
| Contact Us | http://www.kemet.com/contact |
| Investor Relations | http://www.kemet.com/ir |
| Call Us | 1-877-MyKEMET |
| Twitter | http://twitter.com/kemetcapacitors |

## Disclaimer

All product specifications, statements, information and data (collectively, the "Information") are subject to change without notice.

All Information given herein is believed to be accurate and reliable, but is presented without guarantee, warranty, or responsibility of any kind, expressed or implied.

Statements of suitability for certain applications are based on our knowledge of typical operating conditions for such applications, but are not intended to constitute – and we specifically disclaim – any warranty concerning suitability for a specific customer application or use. This Information is intended for use only by customers who have the requisite experience and capability to determine the correct products for their application. Any technical advice inferred from this Information or otherwise provided by us with reference to the use of our products is given gratis, and we assume no obligation or liability for the advice given or results obtained.

Although we design and manufacture our products to the most stringent quality and safety standards, given the current state of the art, isolated component failures may still occur. Accordingly, customer applications which require a high degree of reliability or safety should employ suitable designs or other safeguards (such as installation of protective circuitry or redundancies) in order to ensure that the failure of an electrical component does not result in a risk of personal injury or property damage.

Although all product-related warnings, cautions and notes must be observed, the customer should not assume that all safety measures are indicated or that other measures may not be required.

Digitally signed by Marcy Brand
DN: c=US, st=FL, l=Fort Lauderdale, o=KEMET Corporation, ou=Marketing Communications, cn=Marcy Brand, email=marcybrand@kemet.com
Date: 2011.08.12 15:27:42 -04'00'