- **ADSL Differential Receiver**
  - **Ideal for Central Office or Remote Terminal Applications**
- **Low 3.4 mA Per Channel Quiescent Current**
- **10 nV/√Hz Voltage Noise**
- **Very Low Distortion**
  - **THD = –79 dBc (f = 1 MHz, R_L = 1 kΩ)**
- **High Speed**
  - **175 MHz Bandwidth (–3 dB, G = 1)**
  - **230 V/μs Slew Rate**
- **High Output Drive, I_O = 85 mA (typ)**
- **Wide Range of Power Supplies**
  - **V_{CC} = ±5 V to ±15 V**
- **Available in Standard SOIC or MSOP PowerPAD™ Package**
- **Evaluation Module Available**

THS6072
D OR DGN PACKAGE
(TOP VIEW)

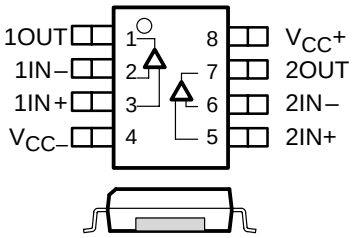

Cross Section View Showing
PowerPAD™ Option (DGN)

description

The THS6072 is a high-speed, low-power differential receiver designed for ADSL communication systems. Its low 3.4-mA per channel quiescent current reduces power to half that of other ADSL receivers making it ideal for low power ADSL applications. This receiver operates with a very low distortion of –79 dBc (f = 1 MHz, R_L = 1 kΩ). The THS6072 is a voltage feedback amplifier offering a high 175-MHz bandwidth and 230-V/μs slew rate and is unity gain stable. It operates over a wide range of power supply voltages including ±4.5 V to ±15 V. This device is available in a standard SOIC or MSOP PowerPAD™ package.

HIGH-SPEED xDSL LINE DRIVER/RECEIVER FAMILY

DEVICE	DRIVER	RECEIVER	5 V	±5 V	±15 V	DESCRIPTION
THS6002	•	•		•	•	500-mA differential line driver and receiver
THS6012	•			•	•	500-mA differential line driver
THS6022	•			•	•	250-mA differential line driver
THS6032	•			•	•	500-mA low-power ADSL central-office line driver
THS6042/3	•			•	•	350-mA, ±12 V ADSL CPE Line Drivers
THS6052/3	•			•	•	100-mA, ±12 V ADSL CPE Line Drivers
THS6062		•	•	•	•	Low-noise ADSL receiver
THS6072		•		•	•	Low-power ADSL receiver
THS6092/3	•		•	•		200-mA, ±12 V ADSL CPE Line Drivers
THS7002		•		•	•	Low-noise programmable-gain ADSL receiver



CAUTION: The THS6072 provides ESD protection circuitry. However, permanent damage can still occur if this device is subjected to high-energy electrostatic discharges. Proper ESD precautions are recommended to avoid any performance degradation or loss of functionality.



Please be aware that an important notice concerning availability, standard warranty, and use in critical applications of Texas Instruments semiconductor products and disclaimers thereto appears at the end of this data sheet.

PowerPAD is a trademark of Texas Instruments.

PRODUCTION DATA information is current as of publication date. Products conform to specifications per the terms of Texas Instruments standard warranty. Production processing does not necessarily include testing of all parameters.

Copyright © 2001, Texas Instruments Incorporated

AVAILABLE OPTIONS

T_A	NUMBER OF CHANNELS	PACKAGED DEVICES		MSOP SYMBOL	EVALUATION MODULE
		PLASTIC SMALL OUTLINE† (D)	PLASTIC MSOP† (DGN)		
0°C to 70°C	2	THS6072CD	THS6072CDGN	AHZ	THS6072EVM
–40°C to 85°C	2	THS6072ID	THS6072IDGN	AIA	—

† The D and DGN packages are available taped and reeled. Add an R suffix to the device type (i.e., THS6072CDGN).

functional block diagram

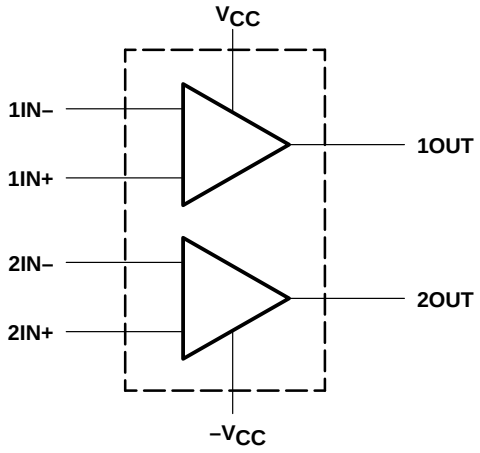

Figure 1. THS6072 – Dual Channel

absolute maximum ratings over operating free-air temperature (unless otherwise noted)†

Supply voltage, V_{CC} . . . . . ±16.5 V
Input voltage, V_I . . . . . $\pm V_{CC}$
Output current, I_O . . . . . 150 mA
Differential input voltage, V_{IO} . . . . . ±4 V
Continuous total power dissipation . . . . . See Dissipation Rating Table
Maximum junction temperature, T_J . . . . . 150°C
Operating free-air temperature, T_A: C-suffix . . . . . 0°C to 70°C
I-suffix . . . . . –40°C to 85°C
Storage temperature, T_{stg} . . . . . –65°C to 150°C
Lead temperature 1,6 mm (1/16 inch) from case for 10 seconds . . . . . 300°C

† Stresses beyond those listed under “absolute maximum ratings” may cause permanent damage to the device. These are stress ratings only and functional operation of the device at these or any other conditions beyond those indicated under “recommended operating conditions” is not implied. Exposure to absolute-maximum-rated conditions for extended periods may affect device reliability.

DISSIPATION RATING TABLE

PACKAGE	θ_{JA} (°C/W)	θ_{JC} (°C/W)	T_A = 25°C POWER RATING
D	167‡	38.3	740 mW
DGN§	58.4	4.7	2.14 W

‡ This data was taken using the JEDEC standard Low-K test PCB. For the JEDEC Proposed High-K test PCB, the θ_{JA} is 95°C/W with a power rating at T_A = 25°C of 1.32 W.
§ This data was taken using 2 oz. trace and copper pad that is soldered directly to a 3 in. × 3 in. PC. For further information, refer to *Application Information* section of this data sheet.

recommended operating conditions

		MIN	NOM	MAX	UNIT
Supply voltage, V_{CC+} and V_{CC-}	Dual supply	±4.5		±16	V
	Single supply	9		32	
Operating free-air temperature, T_A	C-suffix	0		70	°C
	I-suffix	–40		85	

electrical characteristics at T_A = 25°C, V_{CC} = ±15 V, R_L = 150 Ω (unless otherwise noted)

dynamic performance

PARAMETER		TEST CONDITIONS			MIN	TYP	MAX	UNIT
BW	Small-signal bandwidth (–3 dB)	V_{CC} = ±15 V		Gain = 1		175		MHz
		V_{CC} = ±5 V				160		
		V_{CC} = ±15 V		Gain = –1		70		MHz
		V_{CC} = ±5 V				65		
	Bandwidth for 0.1 dB flatness	V_{CC} = ±15 V		Gain = 1		35		MHz
		V_{CC} = ±5 V				35		
	Full power bandwidth†	$V_{O(pp)}$ = 20 V,	V_{CC} = ±15 V			2.7		MHz
		$V_{O(pp)}$ = 5 V,	V_{CC} = ±5 V			7.1		
SR	Slew rate‡	V_{CC} = ±15 V,	20-V step	Gain = 5		230		V/µs
		V_{CC} = ±5 V,	5-V step	Gain = 1		170		
t_S	Settling time to 0.1%	V_{CC} = ±15 V,	5-V step	Gain = –1		43		ns
		V_{CC} = ±5 V,	2-V step			30		
	Settling time to 0.01%	V_{CC} = ±15 V,	5-V step	Gain = –1		233		ns
		V_{CC} = ±5 V,	2-V step			280		

† Full power bandwidth = slew rate/2π $V_{O(Peak)}$.
‡ Slew rate is measured from an output level range of 25% to 75%.

noise/distortion performance

PARAMETER		TEST CONDITIONS			MIN	TYP	MAX	UNIT
THD	Total harmonic distortion	$V_{O(pp)}$ = 2 V, f = 1 MHz, Gain = 2	V_{CC} = ±15 V	R_L = 1 kΩ		–79		dBc
			V_{CC} = ±5 V	R_L = 1 kΩ		–77		
V_n	Input voltage noise	V_{CC} = ±5 V or ±15 V,	f = 10 kHz			10		nV/√Hz
I_n	Input current noise	V_{CC} = ±5 V or ±15 V,	f = 10 kHz			0.7		pA/√Hz
	Channel-to-channel crosstalk	V_{CC} = ±5 V or ±15 V,	f = 1 MHz			–75		dB

dc performance

PARAMETER		TEST CONDITIONS		MIN	TYP	MAX	UNIT
	Open loop gain	V_{CC} = ±15 V, V_O = ±10 V, R_L = 1 kΩ	T_A = 25°C	10	19		V/mV
			T_A = full range	9			
		V_{CC} = ±5 V, V_O = ±2.5 V, R_L = 250 Ω	T_A = 25°C	8	16		V/mV
			T_A = full range	7			
V_{OS}	Input offset voltage	V_{CC} = ±5 V or ±15 V	T_A = 25°C		1	7	mV
			T_A = full range			8	
	Offset voltage drift		T_A = full range		15		µV/°C
I_{IB}	Input bias current		T_A = 25°C		1.2	6	µA
			T_A = full range			8	
I_{OS}	Input offset current		T_A = 25°C		20	250	nA
			T_A = full range			400	
	Offset current drift	T_A = full range			0.3		nA/°C

electrical characteristics at T_A = 25°C, V_{CC} = ±15 V, R_L = 150 Ω (unless otherwise noted) (continued)

input characteristics

PARAMETER		TEST CONDITIONS			MIN	TYP	MAX	UNIT
V_{ICR}	Common-mode input voltage range	V_{CC} = ±15 V			±13.8	±14.1		V
		V_{CC} = ±5 V			±3.8	±3.9		
CMRR	Common mode rejection ratio	V_{CC} = ±15 V,	V_{ICR} = ±12 V,	T_A = full range	78	90		dB
		V_{CC} = ±5 V,	V_{ICR} = ±2 V,	T_A = full range	84	93		dB
R_I	Input resistance					1		MΩ
C_I	Input capacitance					1.5		pF

output characteristics

PARAMETER		TEST CONDITIONS		MIN	TYP	MAX	UNIT
V_O	Output voltage swing	V_{CC} = ±15 V	R_L = 250 Ω	±12	±13.6		V
		V_{CC} = ±5 V	R_L = 150 Ω	±3.4	±3.8		
		V_{CC} = ±15 V	R_L = 1 kΩ	±13	±13.8		V
		V_{CC} = ±5 V		±3.5	±3.9		
I_O	Output current†	V_{CC} = ±15 V	R_L = 20 Ω	65	85		mA
		V_{CC} = ±5 V		50	70		
I_{SC}	Short-circuit current†	V_{CC} = ±15 V			100		mA
R_O	Output resistance	Open loop			13		Ω

† Observe power dissipation ratings to keep the junction temperature below the absolute maximum rating when the output is heavily loaded or shorted. See the absolute maximum ratings section of this data sheet for more information.

power supply

PARAMETER		TEST CONDITIONS		MIN	TYP	MAX	UNIT
V_{CC}	Supply voltage operating range	Dual supply		±4.5		±16.5	V
		Single supply		9		33	
I_{CC}	Supply current (per amplifier)	V_{CC} = ±15 V	T_A = 25°C		3.4	4.2	mA
			T_A = full range			5	
		V_{CC} = ±5 V	T_A = 25°C		2.9	3.7	
			T_A = full range			4.5	
PSRR	Power supply rejection ratio	V_{CC} = ±5 V or ±15 V	T_A = full range	79	90		dB

NOTE: Full range = 0°C to 70°C for C suffix and –40°C to 85°C for I suffix

TYPICAL CHARACTERISTICS

OPEN LOOP GAIN & PHASE RESPONSE vs FREQUENCY

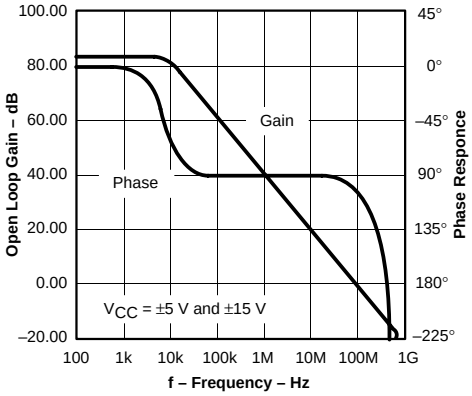

Figure 2

CROSSTALK vs FREQUENCY

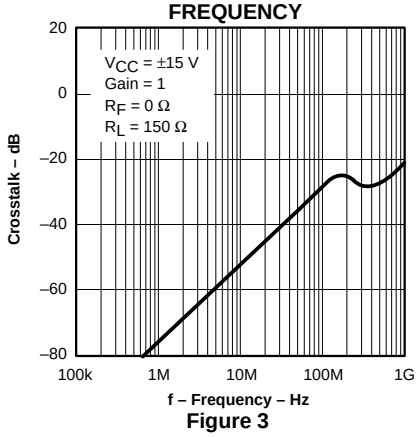

Figure 3

TOTAL HARMONIC DISTORTION vs FREQUENCY

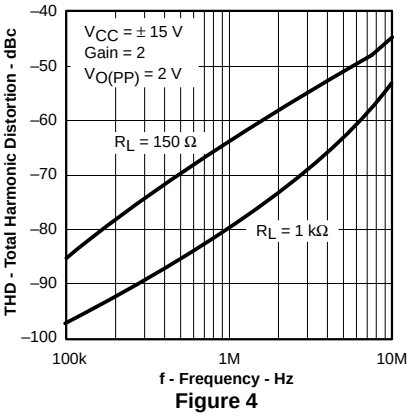

Figure 4

TOTAL HARMONIC DISTORTION vs FREQUENCY

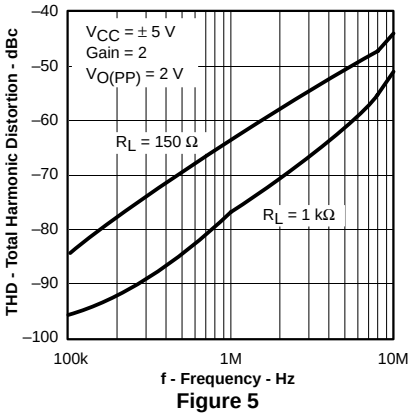

Figure 5

SETTLING vs OUTPUT STEP

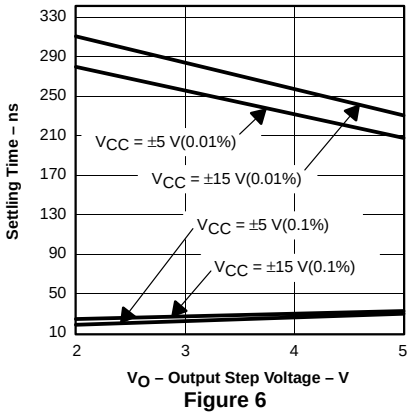

Figure 6

POWER SUPPLY REJECTION RATIO vs FREQUENCY

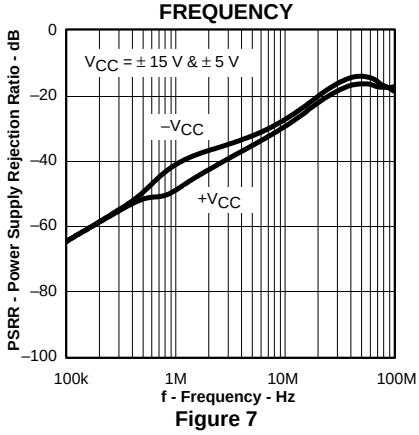

Figure 7

DISTORTION vs OUTPUT VOLTAGE

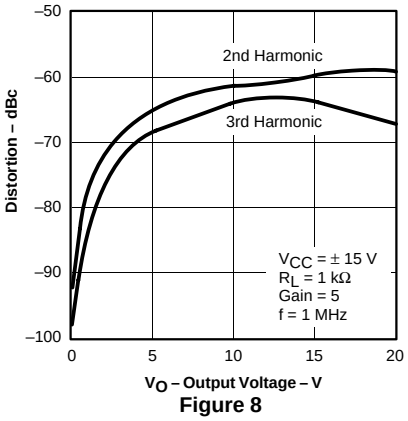

Figure 8

DISTORTION vs OUTPUT VOLTAGE

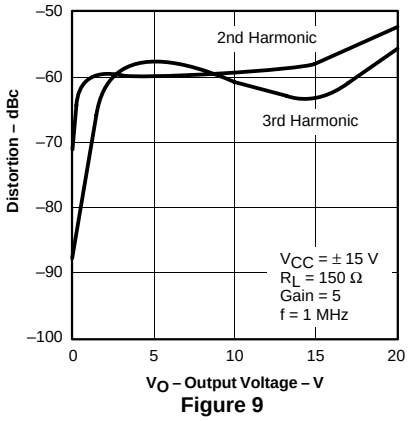

Figure 9

TYPICAL CHARACTERISTICS

DISTORTION vs FREQUENCY

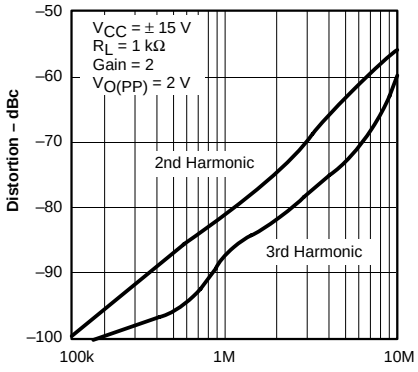

Figure 10

DISTORTION vs FREQUENCY

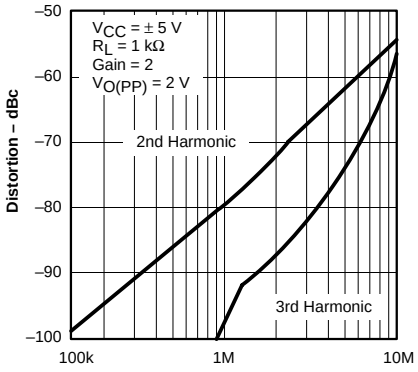

Figure 11

DISTORTION vs FREQUENCY

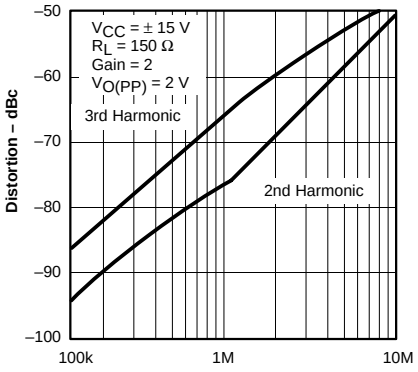

Figure 12

DISTORTION vs FREQUENCY

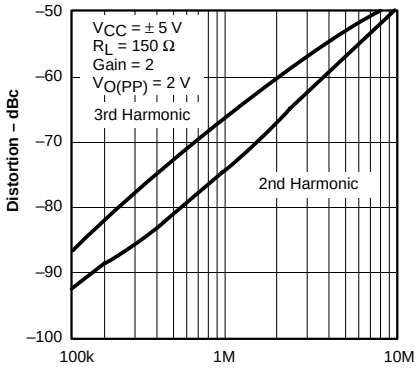

Figure 13

OUTPUT AMPLITUDE vs FREQUENCY

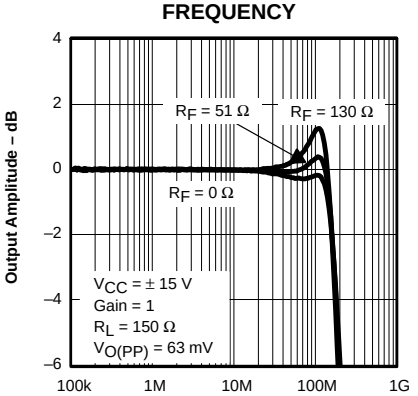

Figure 14

OUTPUT AMPLITUDE vs FREQUENCY

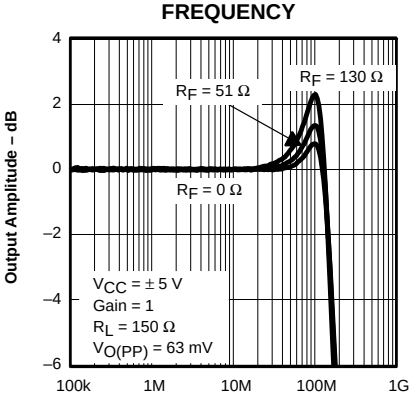

Figure 15

OUTPUT AMPLITUDE vs FREQUENCY

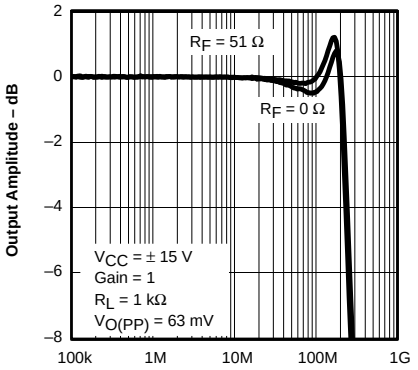

Figure 16

OUTPUT AMPLITUDE vs FREQUENCY

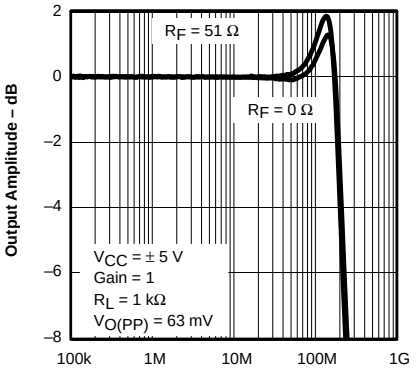

Figure 17

OUTPUT AMPLITUDE vs FREQUENCY

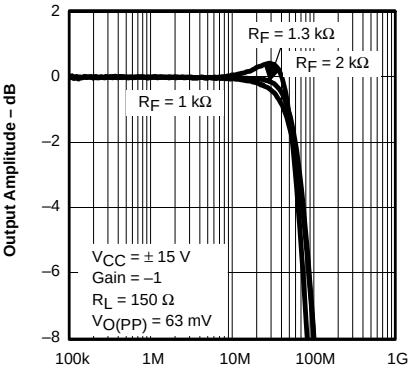

Figure 18

TYPICAL CHARACTERISTICS

OUTPUT AMPLITUDE vs FREQUENCY

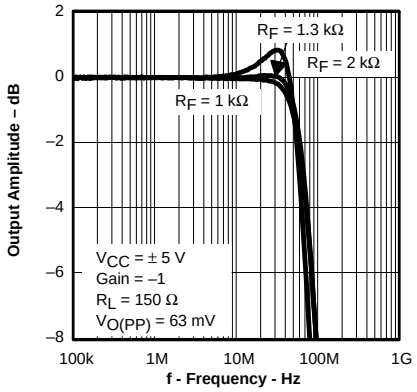

Figure 19

OUTPUT AMPLITUDE vs FREQUENCY

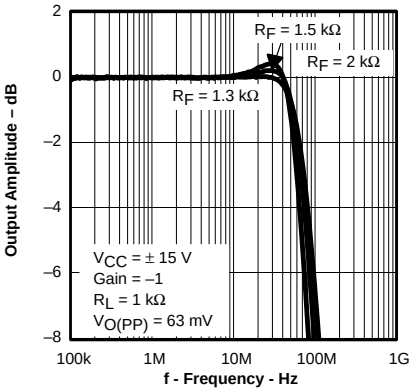

Figure 20

OUTPUT AMPLITUDE vs FREQUENCY

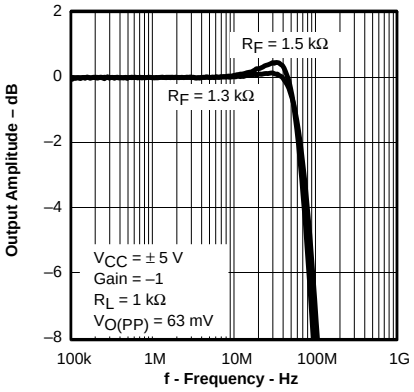

Figure 21

OUTPUT AMPLITUDE vs FREQUENCY

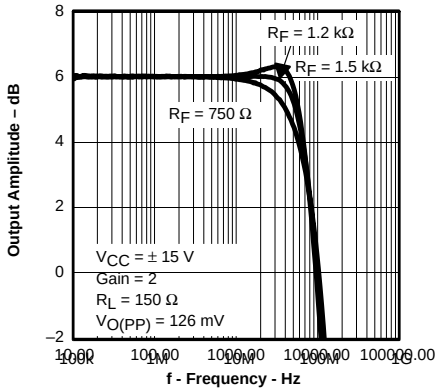

Figure 22

OUTPUT AMPLITUDE vs FREQUENCY

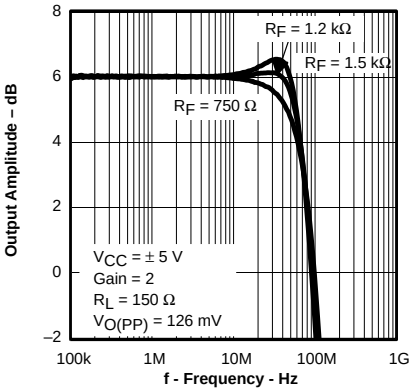

Figure 23

OUTPUT AMPLITUDE vs FREQUENCY

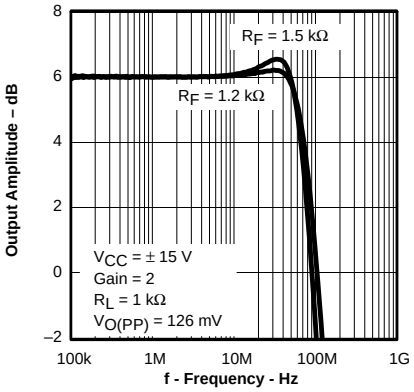

Figure 24

OUTPUT AMPLITUDE vs FREQUENCY

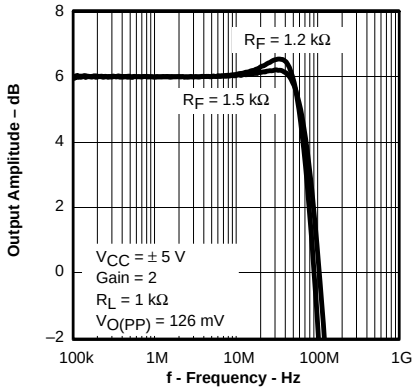

Figure 25

2-V STEP RESPONSE

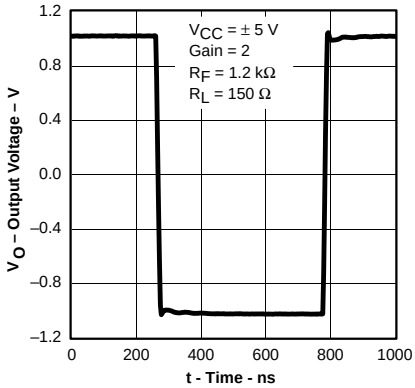

Figure 26

5-V STEP RESPONSE

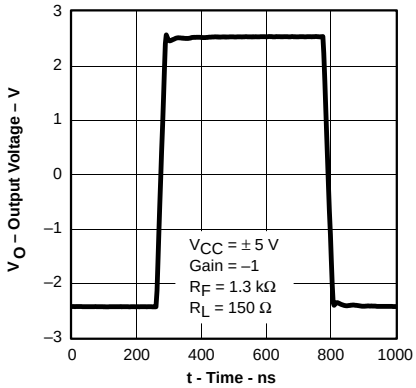

Figure 27

TYPICAL CHARACTERISTICS

2-V STEP RESPONSE

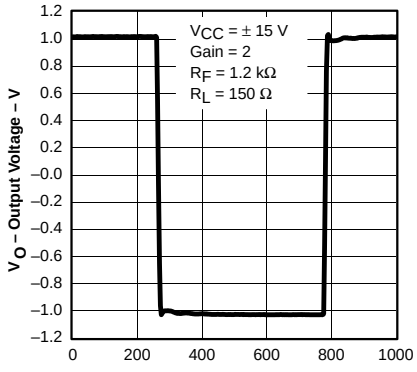

Figure 28

20-V STEP RESPONSE

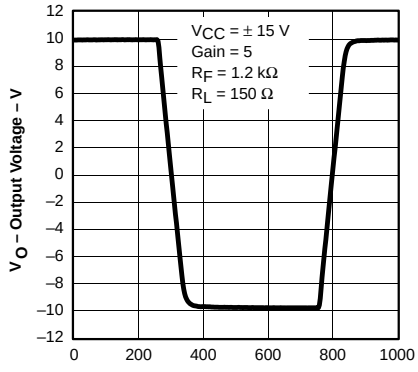

Figure 29

INPUT OFFSET VOLTAGE vs FREE-AIR TEMPERATURE

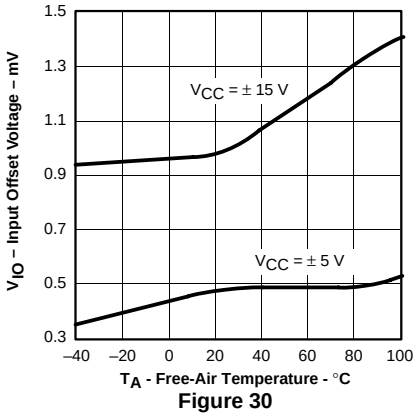

Figure 30

INPUT BIAS CURRENT vs FREE-AIR TEMPERATURE

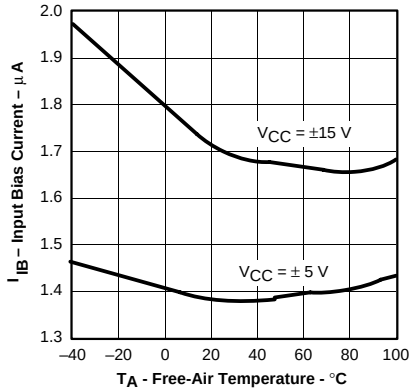

Figure 31

OUTPUT VOLTAGE vs SUPPLY VOLTAGE

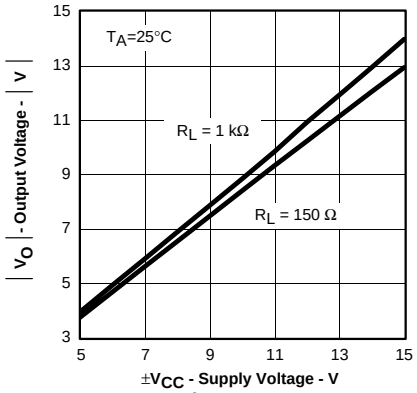

Figure 32

COMMON-MODE INPUT VOLTAGE vs SUPPLY VOLTAGE

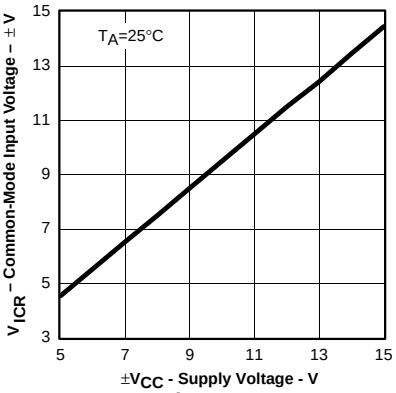

Figure 33

OUTPUT VOLTAGE vs FREE-AIR TEMPERATURE

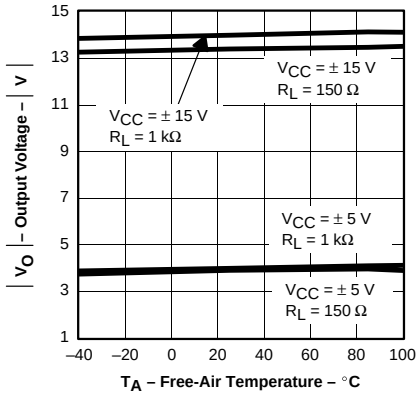

Figure 34

SUPPLY CURRENT vs SUPPLY VOLTAGE

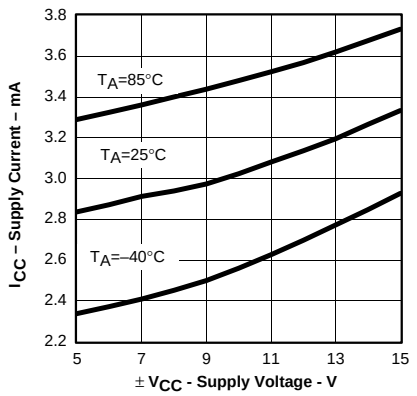

Figure 35

VOLTAGE & CURRENT NOISE vs FREQUENCY

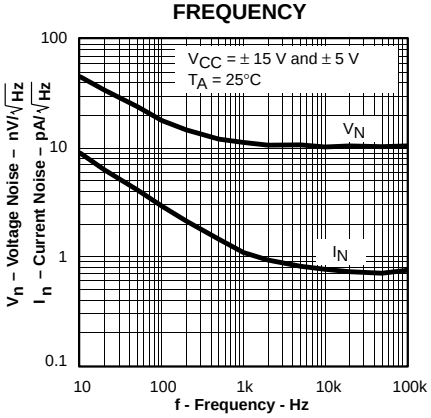

Figure 36

APPLICATION INFORMATION

ADSL line noise

Per ANSI T1.413, the noise power spectral density for an ADSL line is –140 dBm/$\sqrt{Hz}$. This results in a voltage noise requirement of less than 31.6 nV/$\sqrt{Hz}$ for the receiver in an ADSL system with a 1:1 transformer ratio.

Noise Power Spectral Density = –140 dBm/$\sqrt{Hz}$

Power = 1e–17 $\times$ 1 Hz = 0.01 fW

Assume: R_L = 100 Ω

$V_{noise} = \sqrt{(P \times R)} = \sqrt{(0.01\ fW \times 100\ \Omega)} = 31.6\ nV/\sqrt{Hz}$

For ADSL systems that use a 1:2 transformer ratio, such as central office line cards, the voltage noise requirement for the receiver is lowered to 15.8 nV/$\sqrt{Hz}$.

TRANSFORMER RATIO	V_{noise} ON LINE
1:1	31.6 nV/$\sqrt{Hz}$
1:2	15.8 nV/$\sqrt{Hz}$

The THS6072 was designed to operate with 10 nV/$\sqrt{Hz}$ voltage noise, exceeding the noise requirements for an ADSL system operating with 1:1 or 1:2 transformer ratios. For systems where a voltage noise of less than 10 nV/$\sqrt{Hz}$ voltage noise is required, see the THS6062 low noise ADSL receiver which operates with a voltage noise level of 1.6 nV/$\sqrt{Hz}$.

minimizing distortion

One way to minimize distortion is to increase the load impedance seen by the amplifier, thereby reducing the currents in the output stage. This will help keep the output transistors in their linear amplification range and will also reduce the heating effects. This can be seen in Figure 10 through Figure 13, which show a 1-kΩ load distortion is much better than a 150-Ω load.

APPLICATION INFORMATION

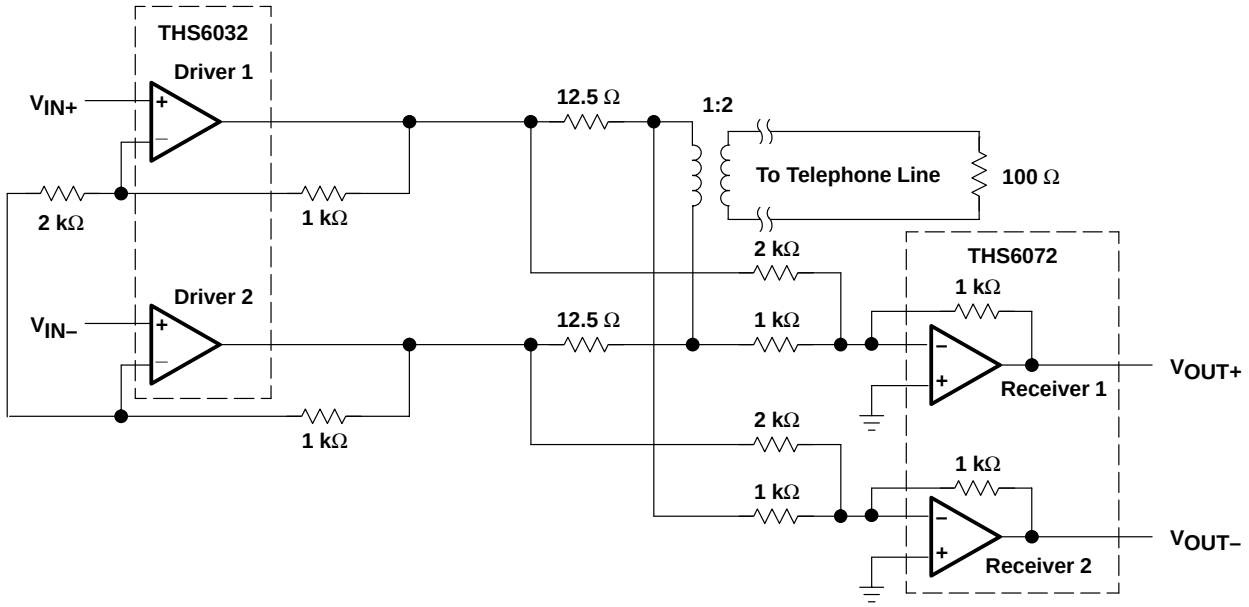

Figure 37. Typical ADSL Central Office Application

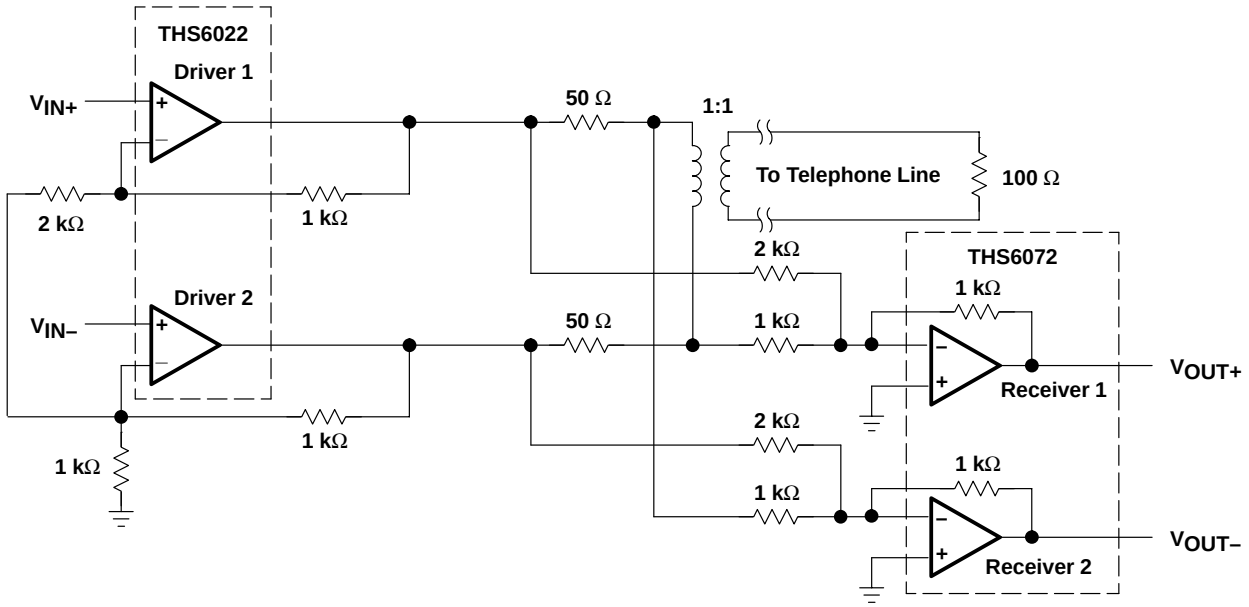

Figure 38. Typical ADSL Remote Terminal Application

APPLICATION INFORMATION

theory of operation

The THS6072 is a high-speed, operational amplifier configured in a voltage feedback architecture. It is built using a 30-V, dielectrically isolated, complementary bipolar process with NPN and PNP transistors possessing f_Ts of several GHz. This results in an exceptionally high performance amplifier that has a wide bandwidth, high slew rate, fast settling time, and low distortion. A simplified schematic is shown in Figure 39.

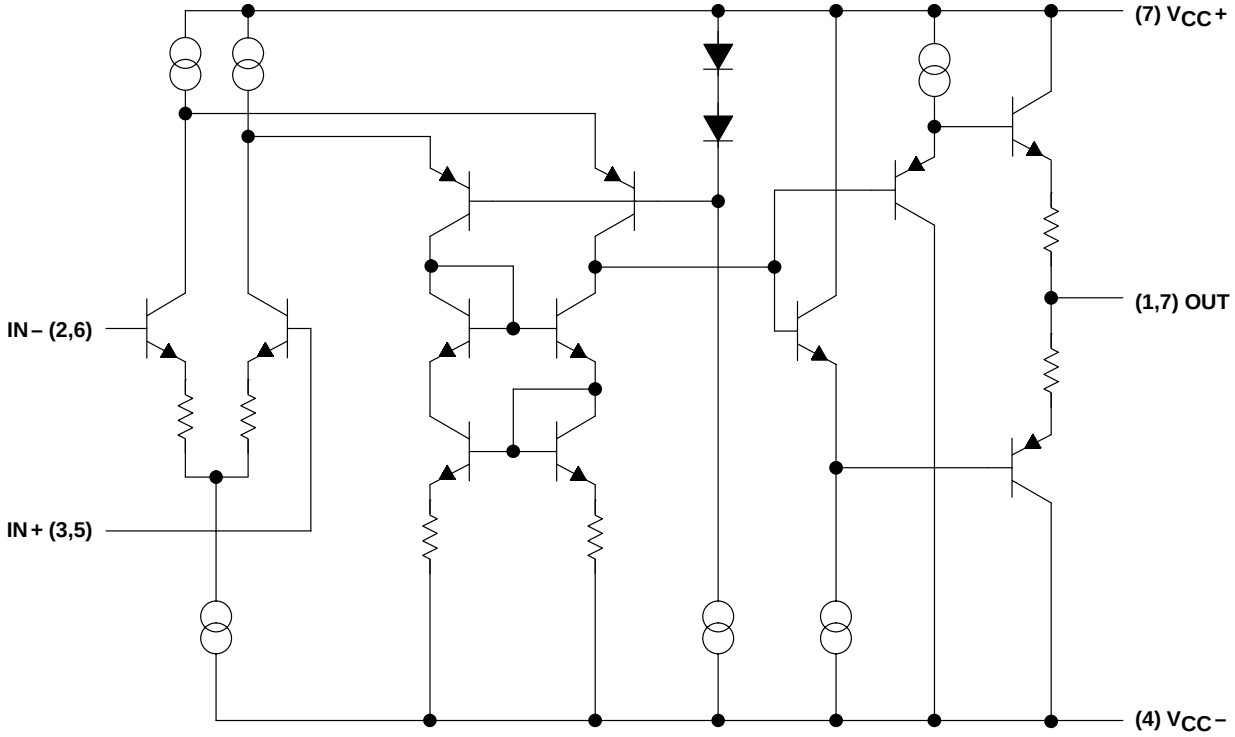

Figure 39. THS6072 Simplified Schematic

noise calculations and noise figure

Noise can cause errors on very small signals. This is especially true when amplifying small signals, where signal-to-noise ratio (SNR) is very important. The noise model for the THS6072 is shown in Figure 40. This model includes all of the noise sources as follows:

- e_n = Amplifier internal voltage noise (nV/$\sqrt{Hz}$)
- IN+ = Noninverting current noise (pA/$\sqrt{Hz}$)
- IN– = Inverting current noise (pA/$\sqrt{Hz}$)
- e_{Rx} = Thermal voltage noise associated with each resistor (e_{Rx} = 4 kTR_x)

APPLICATION INFORMATION

noise calculations and noise figure (continued)

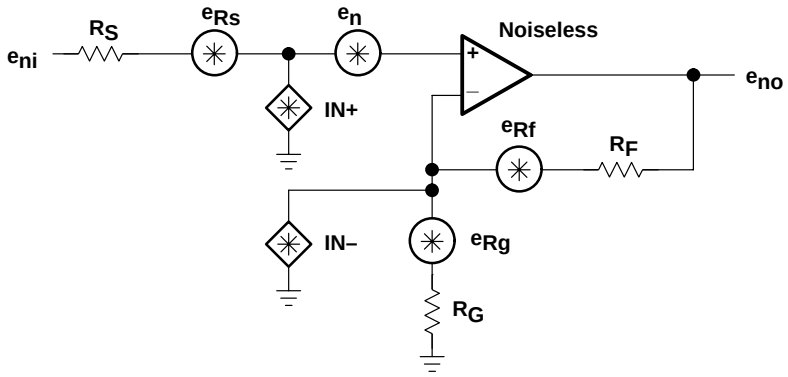

Figure 40. Noise Model

The total equivalent input noise density (e_{ni}) is calculated by using the following equation:

$$e_{ni} = \sqrt{(e_n)^2 + \left(IN+ \times R_S\right)^2 + \left(IN- \times \left(R_F \parallel R_G\right)\right)^2 + 4\ kTR_S + 4\ kT\left(R_F \parallel R_G\right)}$$

Where:

k = Boltzmann's constant = 1.380658×10^{-23}
T = Temperature in degrees Kelvin (273 +°C)
$R_F \parallel R_G$ = Parallel resistance of R_F and R_G

To get the equivalent output noise of the amplifier, just multiply the equivalent input noise density (e_{ni}) by the overall amplifier gain (A_V).

$$e_{no} = e_{ni}\ A_V = e_{ni}\left(1 + \frac{R_F}{R_G}\right) \text{ (noninverting case)}$$

As the previous equations show, to keep noise at a minimum, small value resistors should be used. As the closed-loop gain is increased (by reducing R_G), the input noise is reduced considerably because of the parallel resistance term. This leads to the general conclusion that the most dominant noise sources are the source resistor (R_S) and the internal amplifier noise voltage (e_n). Because noise is summed in a root-mean-squares method, noise sources smaller than 25% of the largest noise source can be effectively ignored. This can greatly simplify the formula and make noise calculations much easier to calculate.

For more information on noise analysis, please refer to the *Noise Analysis* section in *Operational Amplifier Circuits Applications Report* (literature number SLVA043).

APPLICATION INFORMATION

noise calculations and noise figure (continued)

This brings up another noise measurement usually preferred in RF applications, the noise figure (NF). Noise figure is a measure of noise degradation caused by the amplifier. The value of the source resistance must be defined and is typically 50 Ω in RF applications.

$$NF = 10\log\left[\frac{e_{ni}^{2}}{\left(e_{Rs}\right)^{2}}\right]$$

Because the dominant noise components are generally the source resistance and the internal amplifier noise voltage, we can approximate the noise figure as:

$$NF = 10\log\left[1 + \frac{\left[\left(e_{n}\right)^{2} + \left(IN + \times R_{S}\right)^{2}\right]}{4\ kTR_{S}}\right]$$

Figure 41 shows the noise figure graph for the THS6072.

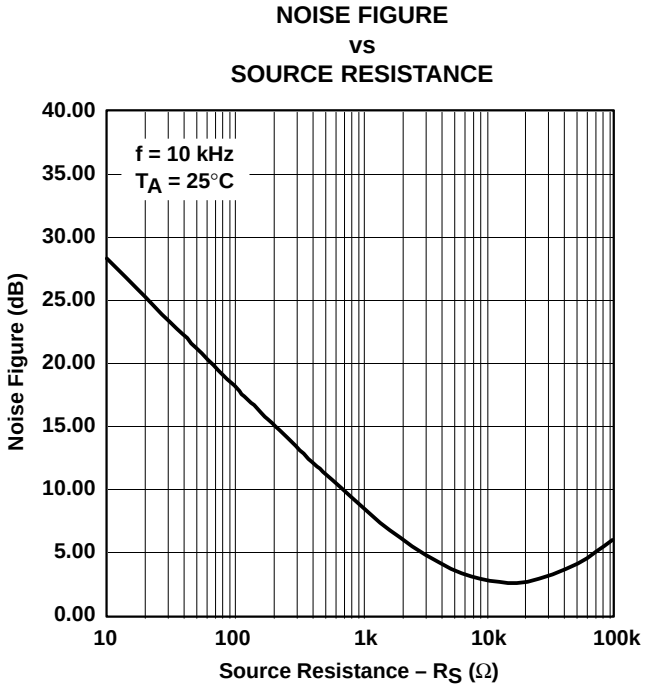

Figure 41. Noise Figure vs Source Resistance

APPLICATION INFORMATION

driving a capacitive load

Driving capacitive loads with high performance amplifiers is not a problem as long as certain precautions are taken. The first is to realize that the THS6072 has been internally compensated to maximize its bandwidth and slew rate performance. When the amplifier is compensated in this manner, capacitive loading directly on the output will decrease the device's phase margin leading to high frequency ringing or oscillations. Therefore, for capacitive loads of greater than 10 pF, it is recommended that a resistor be placed in series with the output of the amplifier, as shown in Figure 42. A minimum value of 20 Ω should work well for most applications. For example, in 75-Ω transmission systems, setting the series resistor value to 75 Ω both isolates any capacitance loading and provides the proper line impedance matching at the source end.

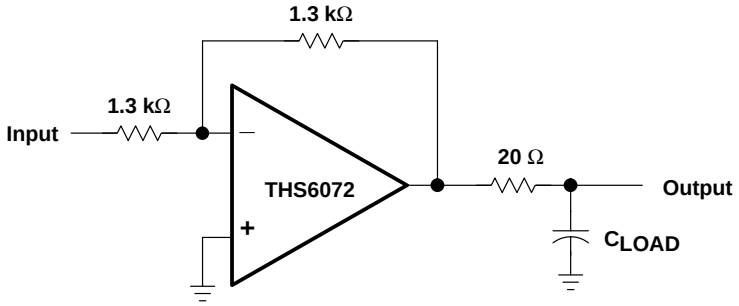

Figure 42. Driving a Capacitive Load

offset voltage

The output offset voltage, (V_{OO}) is the sum of the input offset voltage (V_{IO}) and both input bias currents (I_{IB}) times the corresponding gains. The following schematic and formula can be used to calculate the output offset voltage:

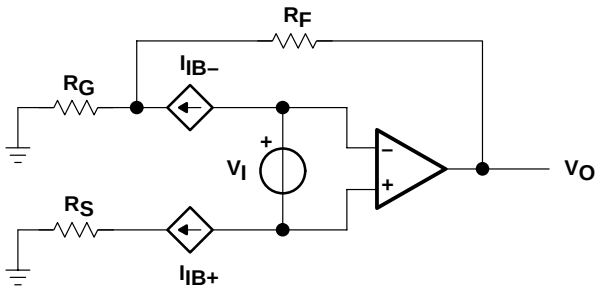

$$V_{OO} = V_{IO}\left(1 + \left(\frac{R_F}{R_G}\right)\right) \pm I_{IB+}\, R_S \left(1 + \left(\frac{R_F}{R_G}\right)\right) \pm I_{IB-}\, R_F$$

Figure 43. Output Offset Voltage Model

APPLICATION INFORMATION

general configurations

When receiving low-level signals, limiting the bandwidth of the incoming signals into the system is often required. The simplest way to accomplish this is to place an RC filter at the noninverting terminal of the amplifier (see Figure 44).

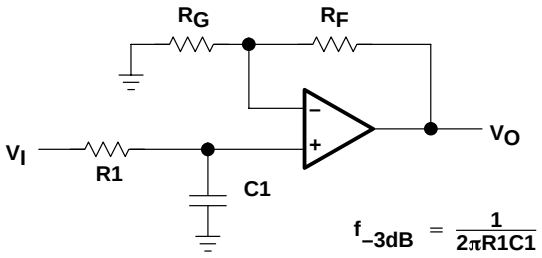

Figure 44. Single-Pole Low-Pass Filter

APPLICATION INFORMATION

circuit layout considerations

To achieve the levels of high frequency performance of the THS6072, follow proper printed-circuit board high frequency design techniques. A general set of guidelines is given below. In addition, a THS6072 evaluation board is available to use as a guide for layout or for evaluating the device performance.

- Ground planes – It is highly recommended that a ground plane be used on the board to provide all components with a low inductive ground connection. However, in the areas of the amplifier inputs and output, the ground plane can be removed to minimize the stray capacitance.
- Proper power supply decoupling – Use a 6.8-μF tantalum capacitor in parallel with a 0.1-μF ceramic capacitor on each supply terminal. It may be possible to share the tantalum among several amplifiers depending on the application, but a 0.1-μF ceramic capacitor should always be used on the supply terminal of every amplifier. In addition, the 0.1-μF capacitor should be placed as close as possible to the supply terminal. As this distance increases, the inductance in the connecting trace makes the capacitor less effective. The designer should strive for distances of less than 0.1 inches between the device power terminals and the ceramic capacitors.
- Sockets – Sockets are not recommended for high-speed operational amplifiers. The additional lead inductance in the socket pins will often lead to stability problems. Surface-mount packages soldered directly to the printed-circuit board is the best implementation.
- Short trace runs/compact part placements – Optimum high frequency performance is achieved when stray series inductance has been minimized. To realize this, the circuit layout should be made as compact as possible, thereby minimizing the length of all trace runs. Particular attention should be paid to the inverting input of the amplifier. Its length should be kept as short as possible. This will help to minimize stray capacitance at the input of the amplifier.
- Surface-mount passive components – Using surface-mount passive components is recommended for high frequency amplifier circuits for several reasons. First, because of the extremely low lead inductance of surface-mount components, the problem with stray series inductance is greatly reduced. Second, the small size of surface-mount components naturally leads to a more compact layout, thereby minimizing both stray inductance and capacitance. If leaded components are used, it is recommended that the lead lengths be kept as short as possible.

general PowerPAD design considerations

The THS6072 is available packaged in a thermally-enhanced DGN package, which is a member of the PowerPAD family of packages. This package is constructed using a downset leadframe upon which the die is mounted [see Figure 45(a) and Figure 45(b)]. This arrangement results in the lead frame being exposed as a thermal pad on the underside of the package [see Figure 45(c)]. Because this thermal pad has direct thermal contact with the die, excellent thermal performance can be achieved by providing a good thermal path away from the thermal pad.

The PowerPAD package allows for both assembly and thermal management in one manufacturing operation. During the surface-mount solder operation (when the leads are being soldered), the thermal pad can also be soldered to a copper area underneath the package. Through the use of thermal paths within this copper area, heat can be conducted away from the package into either a ground plane or other heat dissipating device.

The PowerPAD package represents a breakthrough in combining the small area and ease of assembly of the surface mount with the, heretofore, awkward mechanical methods of heatsinking.

APPLICATION INFORMATION

general PowerPAD design considerations (continued)

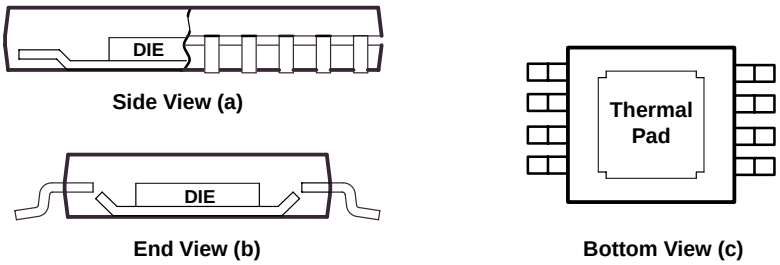

NOTE A: The thermal pad is electrically isolated from all terminals in the package.

Figure 45. Views of Thermally Enhanced DGN Package

Although there are many ways to properly heatsink this device, the following steps illustrate the recommended approach.

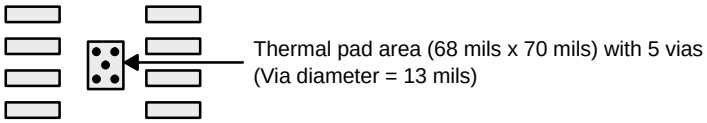

Figure 46. PowerPAD PCB Etch and Via Pattern

1. Prepare the PCB with a top side etch pattern as shown in Figure 46. There should be etch for the leads as well as etch for the thermal pad.
2. Place five holes in the area of the thermal pad. These holes should be 13 mils in diameter. Keep them small so that solder wicking through the holes is not a problem during reflow.
3. Additional vias may be placed anywhere along the thermal plane outside of the thermal pad area. This helps dissipate the heat generated by the THS6072DGN IC. These additional vias may be larger than the 13-mil diameter vias directly under the thermal pad. They can be larger because they are not in the thermal pad area to be soldered, so wicking is not a problem.
4. Connect all holes to the internal ground plane.
5. When connecting these holes to the ground plane, *do not* use the typical web or spoke via connection methodology. Web connections have a high thermal resistance connection that is useful for slowing the heat transfer during soldering operations. This makes the soldering of vias that have plane connections easier. In this application, however, low thermal resistance is desired for the most efficient heat transfer. Therefore, the holes under the THS6072DGN package should make their connection to the internal ground plane with a complete connection around the entire circumference of the plated-through hole.
6. The top-side solder mask should leave the terminals of the package and the thermal pad area with its five holes exposed. The bottom-side solder mask should cover the five holes of the thermal pad area. This prevents solder from being pulled away from the thermal pad area during the reflow process.
7. Apply solder paste to the exposed thermal pad area and all of the IC terminals.
8. With these preparatory steps in place, the THS6072DGN IC is simply placed in position and run through the solder reflow operation as any standard surface-mount component. This results in a part that is properly installed.

APPLICATION INFORMATION

general PowerPAD design considerations (continued)

The actual thermal performance achieved with the THS6072DGN in its PowerPAD package depends on the application. In the example above, if the size of the internal ground plane is approximately 3 inches × 3 inches, then the expected thermal coefficient, θ_{JA}, is about 58.4°C/W. For comparison, the non-PowerPAD version of the THS6072 IC (SOIC) is shown. For a given θ_{JA}, the maximum power dissipation is shown in Figure 47 and is calculated by the following formula:

$$P_D = \left(\frac{T_{MAX} - T_A}{\theta_{JA}} \right)$$

Where:

P_D = Maximum power dissipation of THS6072 IC (watts)
T_{MAX} = Absolute maximum junction temperature (150°C)
T_A = Free-ambient air temperature (°C)
$\theta_{JA} = \theta_{JC} + \theta_{CA}$
θ_{JC} = Thermal coefficient from junction to case
θ_{CA} = Thermal coefficient from case to ambient air (°C/W)

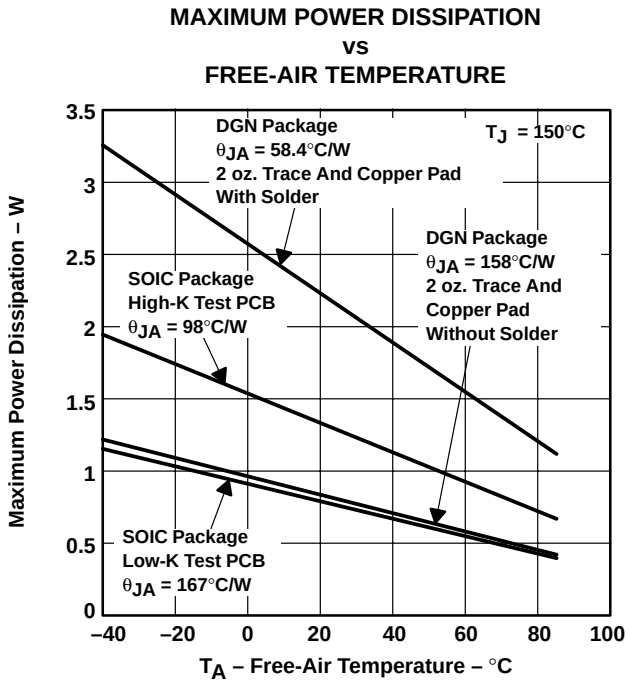

NOTE A: Results are with no air flow and PCB size = 3"× 3"

Figure 47. Maximum Power Dissipation vs Free-Air Temperature

More complete details of the PowerPAD installation process and thermal management techniques can be found in the Texas Instruments Technical Brief, *PowerPAD Thermally Enhanced Package.* This document can be found at the TI web site (www.ti.com) by searching on the key word PowerPAD. The document can also be ordered through your local TI sales office. Refer to literature number SLMA002 when ordering.

APPLICATION INFORMATION

general PowerPAD design considerations (continued)

The next consideration is the package constraints. The two sources of heat within an amplifier are quiescent power and output power. The designer should never forget about the quiescent heat generated within the device, especially multiamplifier devices. Because these devices have linear output stages (Class A-B), most of the heat dissipation is at low output voltages with high output currents. Figure 48 and Figure 49 show this effect, along with the quiescent heat, with an ambient air temperature of 50°C. Obviously, as the ambient temperature increases, the limit lines shown will drop accordingly. The area under each respective limit line is considered the safe operating area. Any condition above this line will exceed the amplifier's limits and failure may result. When using $V_{CC} = \pm 5$ V, there is generally not a heat problem, even with SOIC packages. But, when using
$V_{CC} = \pm 15$ V, the SOIC package is severely limited in the amount of heat it can dissipate. The other key factor when looking at these graphs is how the devices are mounted on the PCB. The PowerPAD devices are extremely useful for heat dissipation. But, the device should always be soldered to a copper plane to fully use the heat dissipation properties of the PowerPAD. The SOIC package, on the other hand, is highly dependent on how it is mounted on the PCB. As more trace and copper area is placed around the device, θ_{JA} decreases and the heat dissipation capability increases. The currents and voltages shown in these graphs are for the total package.

THS6072
MAXIMUM RMS OUTPUT CURRENT
vs
RMS OUTPUT VOLTAGE DUE TO THERMAL LIMITS

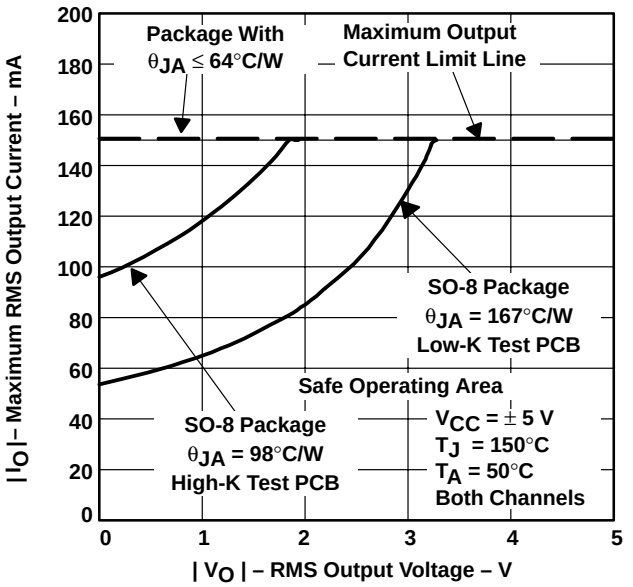

Figure 48

THS6072
MAXIMUM RMS OUTPUT CURRENT
vs
RMS OUTPUT VOLTAGE DUE TO THERMAL LIMITS

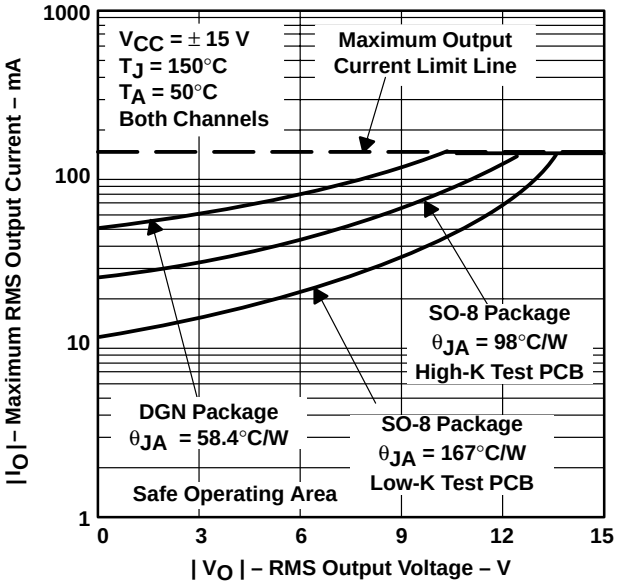

Figure 49

APPLICATION INFORMATION

evaluation board

An evaluation board is available for the THS6072 (literature number SLOP322). This board has been configured for very low parasitic capacitance in order to realize the full performance of the amplifier. A schematic of the evaluation board is shown in Figure 50. The circuitry has been designed so that the amplifier may be used in either an inverting or noninverting configuration. For more information, please refer to the *THS6072 EVM User's Guide*. To order the evaluation board, contact your local TI sales office or distributor.

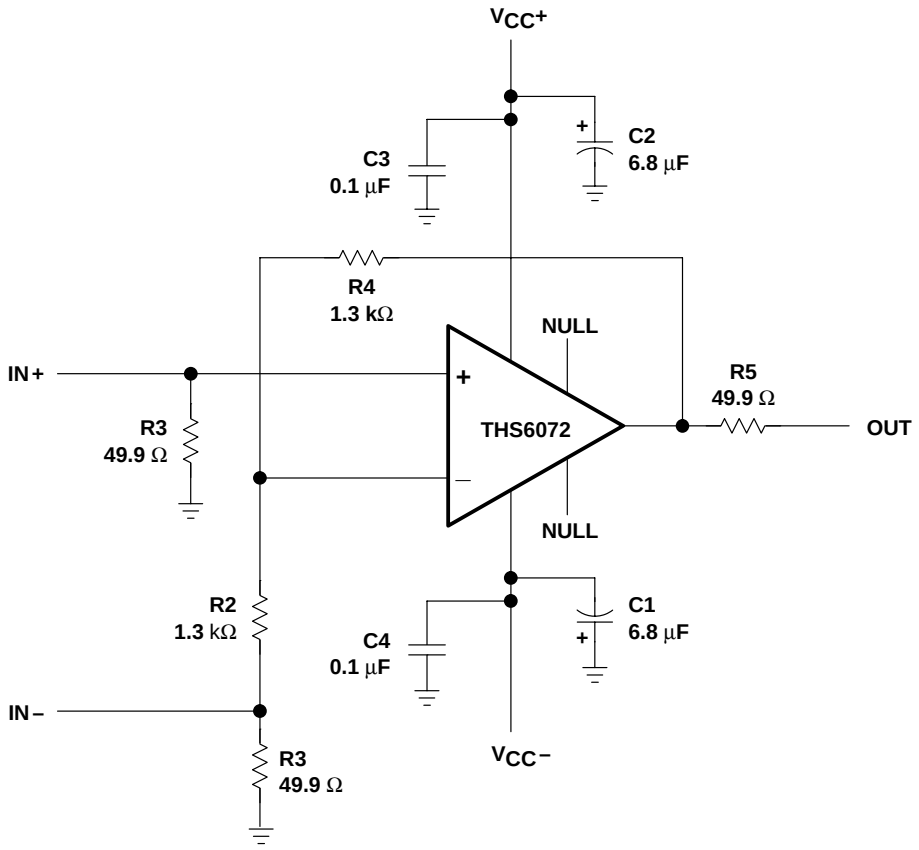

Figure 50. THS6072 Evaluation Board

PACKAGING INFORMATION

Orderable Device	Status (1)	Package Type	Package Drawing	Pins	Package Qty	Eco Plan (2)	Lead/Ball Finish (6)	MSL Peak Temp (3)	Op Temp (°C)	Device Marking (4/5)	Samples
THS6072CD	ACTIVE	SOIC	D	8	75	Green (RoHS & no Sb/Br)	CU NIPDAU	Level-1-260C-UNLIM	0 to 70	H6072C	Samples
THS6072CDGN	ACTIVE	MSOP-PowerPAD	DGN	8	80	Green (RoHS & no Sb/Br)	CU NIPDAU | Call TI	Level-1-260C-UNLIM	0 to 70	AHZ	Samples
THS6072CDGNR	OBSOLETE	MSOP-PowerPAD	DGN	8		TBD	Call TI	Call TI	0 to 70	AHZ	
THS6072CDGNRG4	OBSOLETE	MSOP-PowerPAD	DGN	8		TBD	Call TI	Call TI	0 to 70		
THS6072ID	ACTIVE	SOIC	D	8	75	Green (RoHS & no Sb/Br)	CU NIPDAU	Level-1-260C-UNLIM	-40 to 85	H6072I	Samples
THS6072IDG4	ACTIVE	SOIC	D	8	75	Green (RoHS & no Sb/Br)	CU NIPDAU	Level-1-260C-UNLIM	-40 to 85	H6072I	Samples
THS6072IDGNR	ACTIVE	MSOP-PowerPAD	DGN	8	2500	Green (RoHS & no Sb/Br)	CU NIPDAU	Level-1-260C-UNLIM	-40 to 85	AIA	Samples

(1) The marketing status values are defined as follows:
ACTIVE: Product device recommended for new designs.
LIFEBUY: TI has announced that the device will be discontinued, and a lifetime-buy period is in effect.
NRND: Not recommended for new designs. Device is in production to support existing customers, but TI does not recommend using this part in a new design.
PREVIEW: Device has been announced but is not in production. Samples may or may not be available.
OBSOLETE: TI has discontinued the production of the device.

(2) Eco Plan - The planned eco-friendly classification: Pb-Free (RoHS), Pb-Free (RoHS Exempt), or Green (RoHS & no Sb/Br) - please check http://www.ti.com/productcontent for the latest availability information and additional product content details.
TBD: The Pb-Free/Green conversion plan has not been defined.
Pb-Free (RoHS): TI's terms "Lead-Free" or "Pb-Free" mean semiconductor products that are compatible with the current RoHS requirements for all 6 substances, including the requirement that lead not exceed 0.1% by weight in homogeneous materials. Where designed to be soldered at high temperatures, TI Pb-Free products are suitable for use in specified lead-free processes.
Pb-Free (RoHS Exempt): This component has a RoHS exemption for either 1) lead-based flip-chip solder bumps used between the die and package, or 2) lead-based die adhesive used between the die and leadframe. The component is otherwise considered Pb-Free (RoHS compatible) as defined above.
Green (RoHS & no Sb/Br): TI defines "Green" to mean Pb-Free (RoHS compatible), and free of Bromine (Br) and Antimony (Sb) based flame retardants (Br or Sb do not exceed 0.1% by weight in homogeneous material)

(3) MSL, Peak Temp. - The Moisture Sensitivity Level rating according to the JEDEC industry standard classifications, and peak solder temperature.

(4) There may be additional marking, which relates to the logo, the lot trace code information, or the environmental category on the device.

(5) Multiple Device Markings will be inside parentheses. Only one Device Marking contained in parentheses and separated by a "~" will appear on a device. If a line is indented then it is a continuation of the previous line and the two combined represent the entire Device Marking for that device.

(6) Lead/Ball Finish - Orderable Devices may have multiple material finish options. Finish options are separated by a vertical ruled line. Lead/Ball Finish values may wrap to two lines if the finish value exceeds the maximum column width.

Important Information and Disclaimer: The information provided on this page represents TI's knowledge and belief as of the date that it is provided. TI bases its knowledge and belief on information provided by third parties, and makes no representation or warranty as to the accuracy of such information. Efforts are underway to better integrate information from third parties. TI has taken and continues to take reasonable steps to provide representative and accurate information but may not have conducted destructive testing or chemical analysis on incoming materials and chemicals. TI and TI suppliers consider certain information to be proprietary, and thus CAS numbers and other limited information may not be available for release.

In no event shall TI's liability arising out of such information exceed the total purchase price of the TI part(s) at issue in this document sold by TI to Customer on an annual basis.

TAPE AND REEL INFORMATION

REEL DIMENSIONS

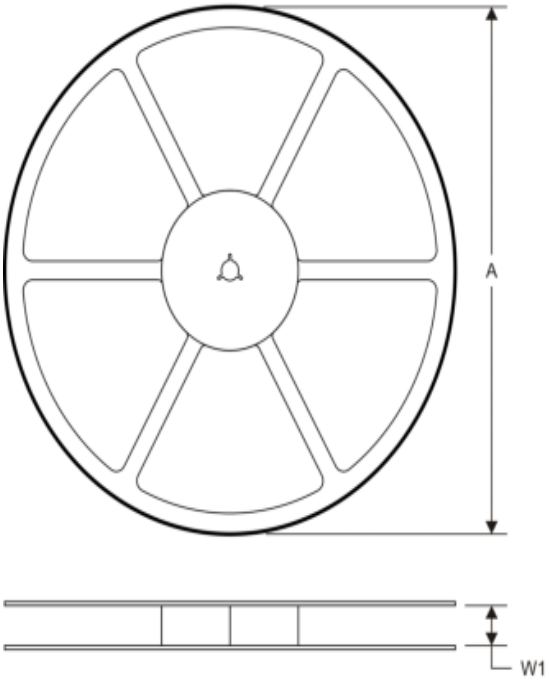

TAPE DIMENSIONS

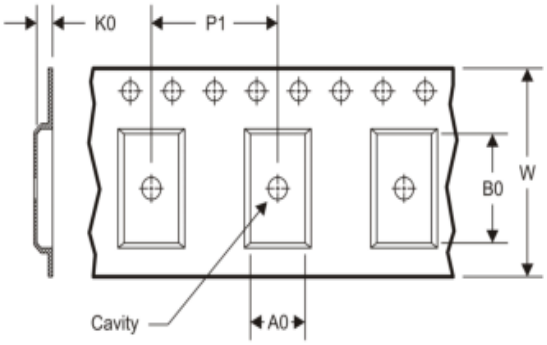

A0	Dimension designed to accommodate the component width
B0	Dimension designed to accommodate the component length
K0	Dimension designed to accommodate the component thickness
W	Overall width of the carrier tape
P1	Pitch between successive cavity centers

TAPE AND REEL INFORMATION

*All dimensions are nominal

Device	Package Type	Package Drawing	Pins	SPQ	Reel Diameter (mm)	Reel Width W1 (mm)	A0 (mm)	B0 (mm)	K0 (mm)	P1 (mm)	W (mm)	Pin1 Quadrant
THS6072IDGNR	MSOP-Power PAD	DGN	8	2500	330.0	12.4	5.3	3.4	1.4	8.0	12.0	Q1

TAPE AND REEL BOX DIMENSIONS

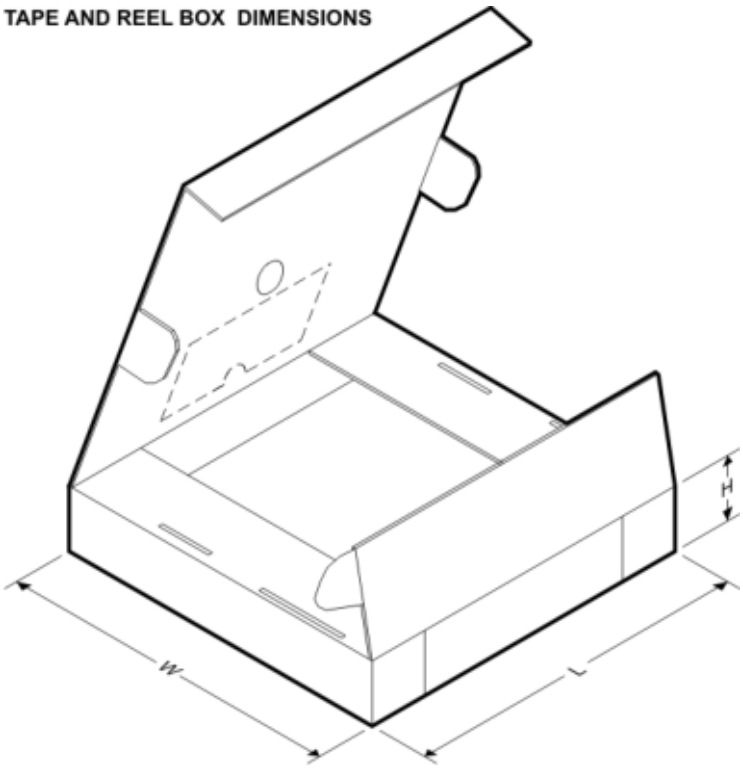

*All dimensions are nominal

Device	Package Type	Package Drawing	Pins	SPQ	Length (mm)	Width (mm)	Height (mm)
THS6072IDGNR	MSOP-PowerPAD	DGN	8	2500	358.0	335.0	35.0

DGN (S–PDSO–G8) PowerPAD™ PLASTIC SMALL OUTLINE

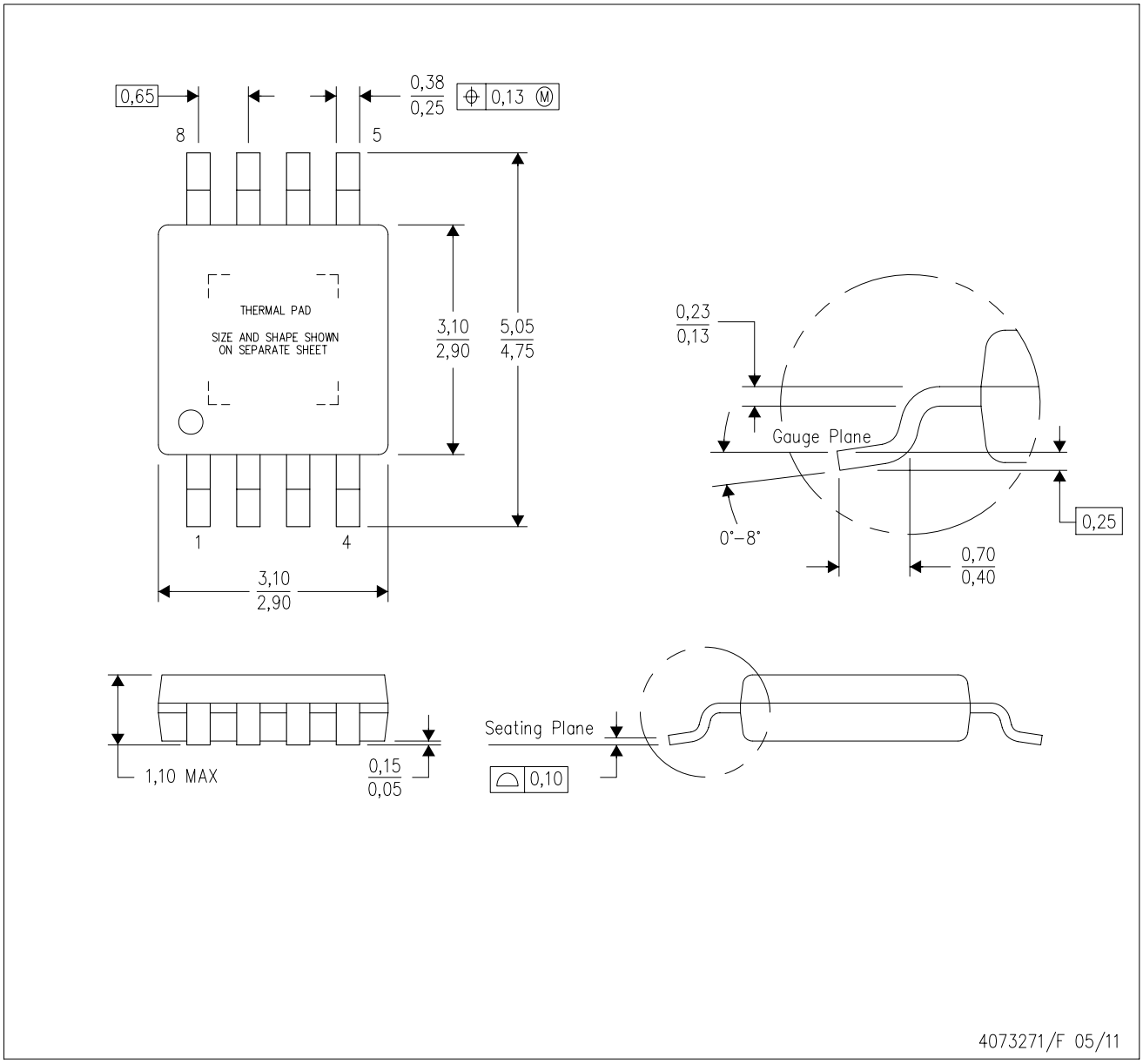

NOTES:
A. All linear dimensions are in millimeters.
B. This drawing is subject to change without notice.
C. Body dimensions do not include mold flash or protrusion.
D. This package is designed to be soldered to a thermal pad on the board. Refer to Technical Brief, PowerPad Thermally Enhanced Package, Texas Instruments Literature No. SLMA002 for information regarding recommended board layout. This document is available at www.ti.com <http://www.ti.com>.
E. See the additional figure in the Product Data Sheet for details regarding the exposed thermal pad features and dimensions.
F. Falls within JEDEC MO–187 variation AA–T

PowerPAD is a trademark of Texas Instruments.

DGN (S–PDSO–G8) PowerPAD™ PLASTIC SMALL OUTLINE

THERMAL INFORMATION

This PowerPAD™ package incorporates an exposed thermal pad that is designed to be attached to a printed circuit board (PCB). The thermal pad must be soldered directly to the PCB. After soldering, the PCB can be used as a heatsink. In addition, through the use of thermal vias, the thermal pad can be attached directly to the appropriate copper plane shown in the electrical schematic for the device, or alternatively, can be attached to a special heatsink structure designed into the PCB. This design optimizes the heat transfer from the integrated circuit (IC).

For additional information on the PowerPAD package and how to take advantage of its heat dissipating abilities, refer to Technical Brief, PowerPAD Thermally Enhanced Package, Texas Instruments Literature No. SLMA002 and Application Brief, PowerPAD Made Easy, Texas Instruments Literature No. SLMA004. Both documents are available at www.ti.com.

The exposed thermal pad dimensions for this package are shown in the following illustration.

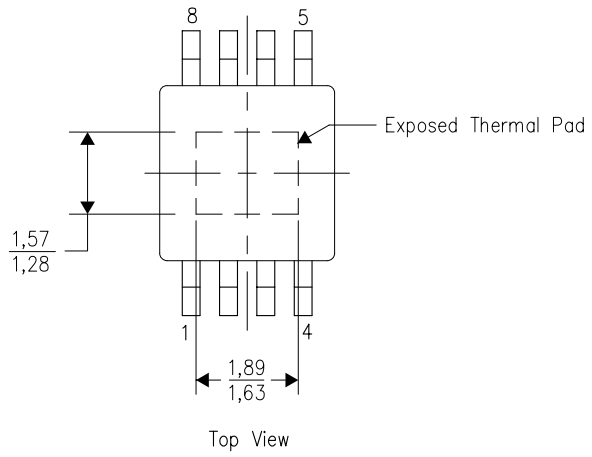

Top View

Exposed Thermal Pad Dimensions

4206323–2/I 12/11

NOTE: All linear dimensions are in millimeters

PowerPAD is a trademark of Texas Instruments

DGN (R–PDSO–G8) PowerPAD™ PLASTIC SMALL OUTLINE

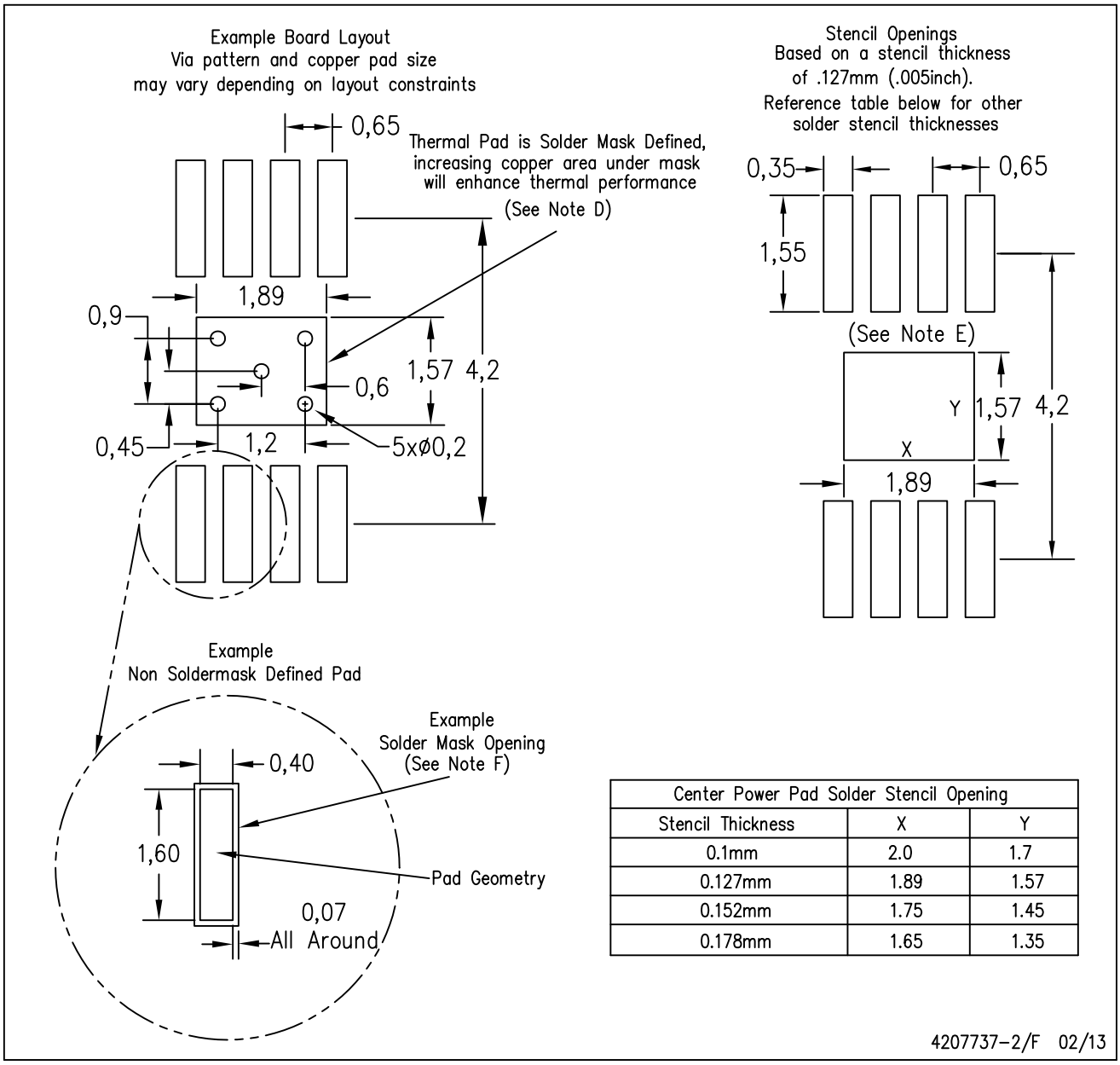

Center Power Pad Solder Stencil Opening		
Stencil Thickness	X	Y
0.1mm	2.0	1.7
0.127mm	1.89	1.57
0.152mm	1.75	1.45
0.178mm	1.65	1.35

4207737–2/F 02/13

NOTES:
A. All linear dimensions are in millimeters.
B. This drawing is subject to change without notice.
C. Customers should place a note on the circuit board fabrication drawing not to alter the center solder mask defined pad.
D. This package is designed to be soldered to a thermal pad on the board. Refer to Technical Brief, PowerPad Thermally Enhanced Package, Texas Instruments Literature No. SLMA002, SLMA004, and also the Product Data Sheets for specific thermal information, via requirements, and recommended board layout. These documents are available at www.ti.com <http://www.ti.com>.
E. Laser cutting apertures with trapezoidal walls and also rounding corners will offer better paste release. Customers should contact their board assembly site for stencil design recommendations. Example stencil design based on a 50% volumetric metal load solder paste. Refer to IPC–7525 for other stencil recommendations.
F. Customers should contact their board fabrication site for solder mask tolerances between and around signal pads.

PowerPAD is a trademark of Texas Instruments

D (R–PDSO–G8) PLASTIC SMALL OUTLINE

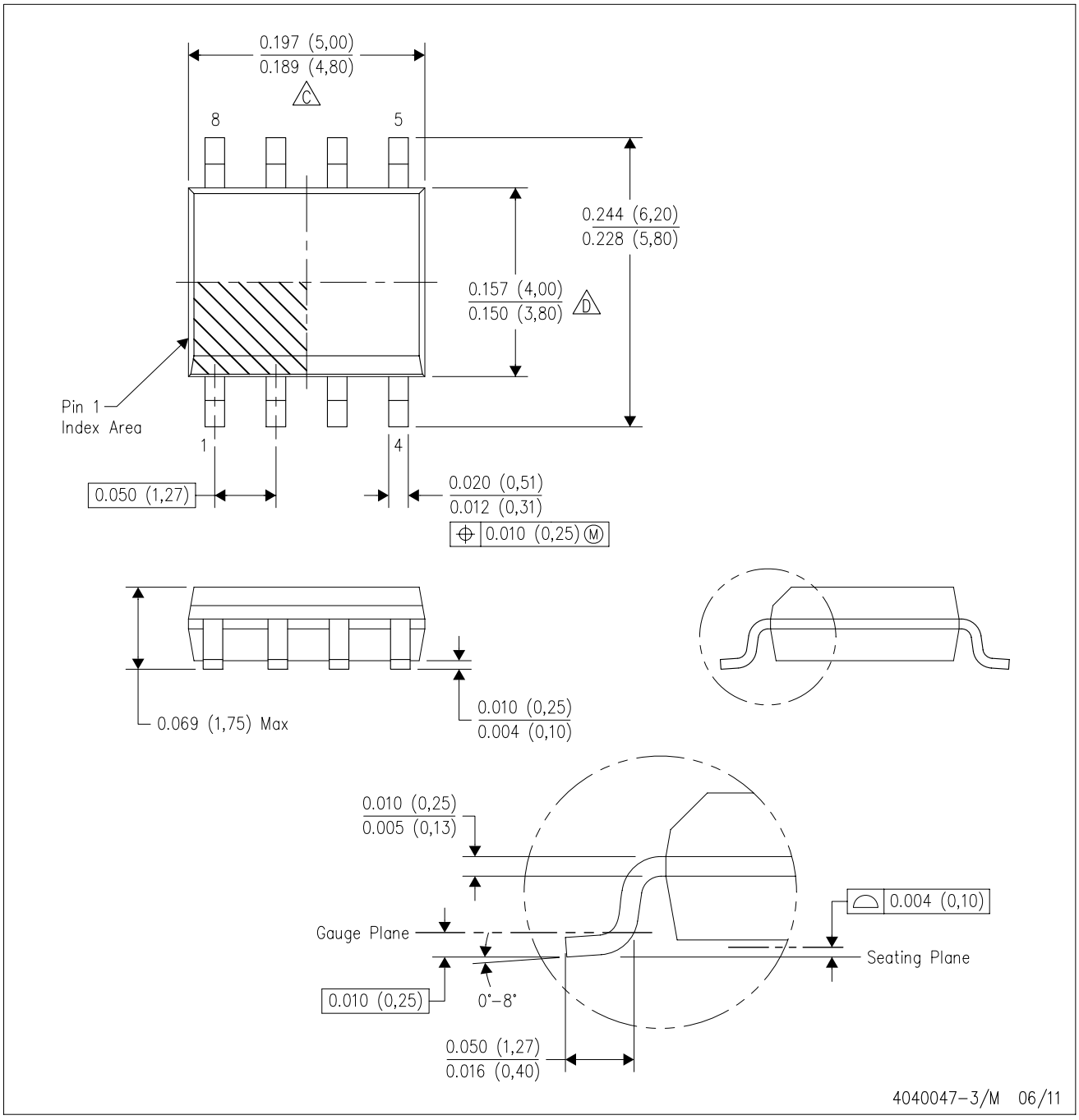

NOTES:
A. All linear dimensions are in inches (millimeters).
B. This drawing is subject to change without notice.
C. Body length does not include mold flash, protrusions, or gate burrs. Mold flash, protrusions, or gate burrs shall not exceed 0.006 (0,15) each side.
D. Body width does not include interlead flash. Interlead flash shall not exceed 0.017 (0,43) each side.
E. Reference JEDEC MS–012 variation AA.

D (R–PDSO–G8) PLASTIC SMALL OUTLINE

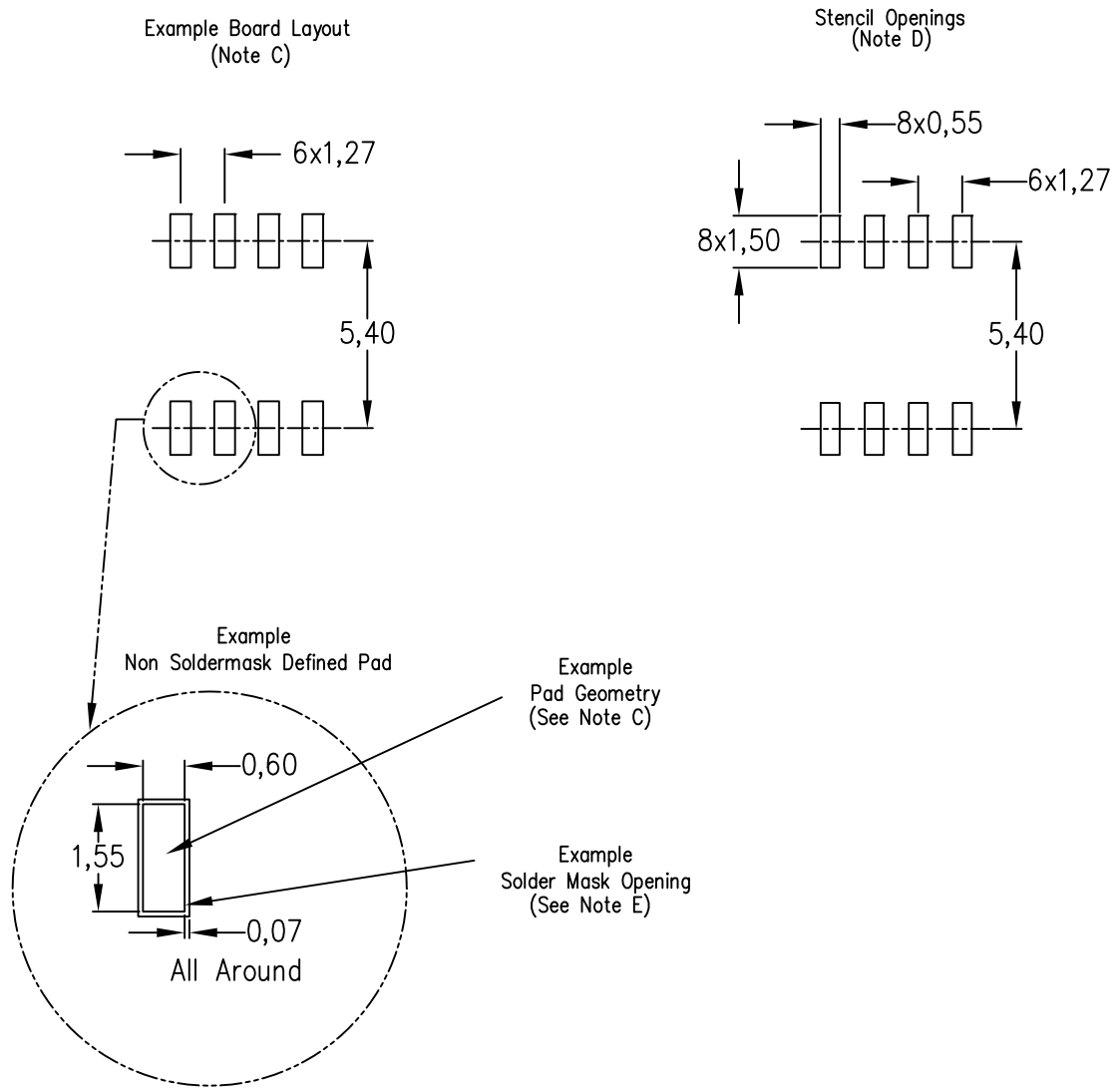

NOTES:
A. All linear dimensions are in millimeters.
B. This drawing is subject to change without notice.
C. Publication IPC–7351 is recommended for alternate designs.
D. Laser cutting apertures with trapezoidal walls and also rounding corners will offer better paste release. Customers should contact their board assembly site for stencil design recommendations. Refer to IPC–7525 for other stencil recommendations.
E. Customers should contact their board fabrication site for solder mask tolerances between and around signal pads.

IMPORTANT NOTICE

Texas Instruments Incorporated and its subsidiaries (TI) reserve the right to make corrections, enhancements, improvements and other changes to its semiconductor products and services per JESD46, latest issue, and to discontinue any product or service per JESD48, latest issue. Buyers should obtain the latest relevant information before placing orders and should verify that such information is current and complete. All semiconductor products (also referred to herein as “components”) are sold subject to TI’s terms and conditions of sale supplied at the time of order acknowledgment.

TI warrants performance of its components to the specifications applicable at the time of sale, in accordance with the warranty in TI’s terms and conditions of sale of semiconductor products. Testing and other quality control techniques are used to the extent TI deems necessary to support this warranty. Except where mandated by applicable law, testing of all parameters of each component is not necessarily performed.

TI assumes no liability for applications assistance or the design of Buyers’ products. Buyers are responsible for their products and applications using TI components. To minimize the risks associated with Buyers’ products and applications, Buyers should provide adequate design and operating safeguards.

TI does not warrant or represent that any license, either express or implied, is granted under any patent right, copyright, mask work right, or other intellectual property right relating to any combination, machine, or process in which TI components or services are used. Information published by TI regarding third-party products or services does not constitute a license to use such products or services or a warranty or endorsement thereof. Use of such information may require a license from a third party under the patents or other intellectual property of the third party, or a license from TI under the patents or other intellectual property of TI.

Reproduction of significant portions of TI information in TI data books or data sheets is permissible only if reproduction is without alteration and is accompanied by all associated warranties, conditions, limitations, and notices. TI is not responsible or liable for such altered documentation. Information of third parties may be subject to additional restrictions.

Resale of TI components or services with statements different from or beyond the parameters stated by TI for that component or service voids all express and any implied warranties for the associated TI component or service and is an unfair and deceptive business practice. TI is not responsible or liable for any such statements.

Buyer acknowledges and agrees that it is solely responsible for compliance with all legal, regulatory and safety-related requirements concerning its products, and any use of TI components in its applications, notwithstanding any applications-related information or support that may be provided by TI. Buyer represents and agrees that it has all the necessary expertise to create and implement safeguards which anticipate dangerous consequences of failures, monitor failures and their consequences, lessen the likelihood of failures that might cause harm and take appropriate remedial actions. Buyer will fully indemnify TI and its representatives against any damages arising out of the use of any TI components in safety-critical applications.

In some cases, TI components may be promoted specifically to facilitate safety-related applications. With such components, TI’s goal is to help enable customers to design and create their own end-product solutions that meet applicable functional safety standards and requirements. Nonetheless, such components are subject to these terms.

No TI components are authorized for use in FDA Class III (or similar life-critical medical equipment) unless authorized officers of the parties have executed a special agreement specifically governing such use.

Only those TI components which TI has specifically designated as military grade or “enhanced plastic” are designed and intended for use in military/aerospace applications or environments. Buyer acknowledges and agrees that any military or aerospace use of TI components which have ***not*** been so designated is solely at the Buyer's risk, and that Buyer is solely responsible for compliance with all legal and regulatory requirements in connection with such use.

TI has specifically designated certain components as meeting ISO/TS16949 requirements, mainly for automotive use. In any case of use of non-designated products, TI will not be responsible for any failure to meet ISO/TS16949.

Products		**Applications**	
Audio	www.ti.com/audio	Automotive and Transportation	www.ti.com/automotive
Amplifiers	amplifier.ti.com	Communications and Telecom	www.ti.com/communications
Data Converters	dataconverter.ti.com	Computers and Peripherals	www.ti.com/computers
DLP® Products	www.dlp.com	Consumer Electronics	www.ti.com/consumer-apps
DSP	dsp.ti.com	Energy and Lighting	www.ti.com/energy
Clocks and Timers	www.ti.com/clocks	Industrial	www.ti.com/industrial
Interface	interface.ti.com	Medical	www.ti.com/medical
Logic	logic.ti.com	Security	www.ti.com/security
Power Mgmt	power.ti.com	Space, Avionics and Defense	www.ti.com/space-avionics-defense
Microcontrollers	microcontroller.ti.com	Video and Imaging	www.ti.com/video
RFID	www.ti-rfid.com		
OMAP Applications Processors	www.ti.com/omap	**TI E2E Community**	e2e.ti.com
Wireless Connectivity	www.ti.com/wirelessconnectivity		

Mailing Address: Texas Instruments, Post Office Box 655303, Dallas, Texas 75265
Copyright © 2014, Texas Instruments Incorporated