TIP140, TIP141, TIP142, (NPN); TIP145, TIP146, TIP147, (PNP)

TIP141, TIP142, TIP146, and TIP147 are Preferred Devices

Darlington Complementary Silicon Power Transistors

Designed for general−purpose amplifier and low frequency switching applications.

Features

- High DC Current Gain −
  Min h_{FE} = 1000 @ I_C = 5.0 A, V_{CE} = 4 V
- Collector−Emitter Sustaining Voltage − @ 30 mA
  $V_{CEO(sus)}$ = 60 Vdc (Min) − TIP140, TIP145
  = 80 Vdc (Min) − TIP141, TIP146
  = 100 Vdc (Min) − TIP142, TIP147
- Monolithic Construction with Built−In Base−Emitter Shunt Resistor
- Pb−Free Packages are Available*

MAXIMUM RATINGS

Rating	Symbol	TIP140 TIP145	TIP141 TIP146	TIP142 TIP147	Unit
Collector − Emitter Voltage	V_{CEO}	60	80	100	Vdc
Collector − Base Voltage	V_{CB}	60	80	100	Vdc
Emitter − Base Voltage	V_{EB}	5.0			Vdc
Collector Current − Continuous − Peak (Note 1)	I_C	10 15			Adc
Base Current − Continuous	I_B	0.5			Adc
Total Power Dissipation @ T_C = 25°C	P_D	125			W
Operating and Storage Junction Temperature Range	T_J, T_{stg}	−65 to +150			°C

THERMAL CHARACTERISTICS

Characteristic	Symbol	Max	Unit
Thermal Resistance, Junction−to−Case	$R_{\theta JC}$	1.0	°C/W
Thermal Resistance, Junction−to−Ambient	$R_{\theta JA}$	35.7	°C/W

Maximum ratings are those values beyond which device damage can occur. Maximum ratings applied to the device are individual stress limit values (not normal operating conditions) and are not valid simultaneously. If these limits are exceeded, device functional operation is not implied, damage may occur and reliability may be affected.

1. 5 ms, ≤ 10% Duty Cycle.

*For additional information on our Pb−Free strategy and soldering details, please download the ON Semiconductor Soldering and Mounting Techniques Reference Manual, SOLDERRM/D.

ON Semiconductor®

http://onsemi.com

10 AMPERE DARLINGTON COMPLEMENTARY SILICON POWER TRANSISTORS 60−100 VOLTS, 125 WATTS

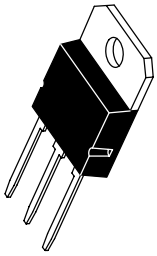

SOT−93 (TO−218)
CASE 340D
STYLE 1

MARKING DIAGRAM

A = Assembly Location
Y = Year
WW = Work Week
TIP14x = Device Code
x = 0, 1, 2, 5, 6, or 7
G = Pb−Free Package

ORDERING INFORMATION

See detailed ordering and shipping information in the package dimensions section on page 2 of this data sheet.

Preferred devices are recommended choices for future use and best overall value.

© Semiconductor Components Industries, LLC, 2005

September, 2005 − Rev. 5

Publication Order Number:
TIP140/D

DARLINGTON SCHEMATICS

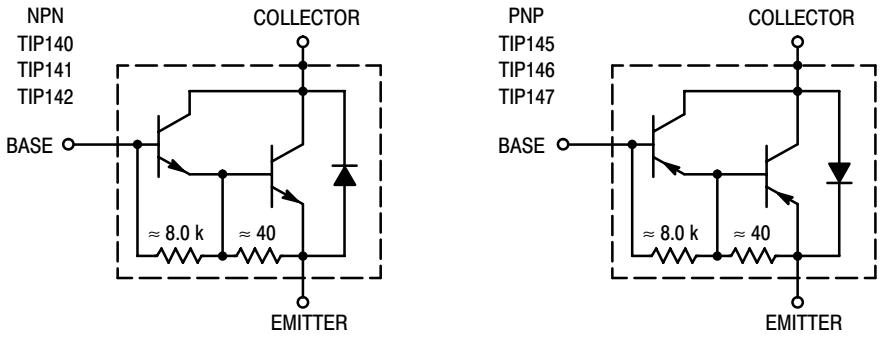

ORDERING INFORMATION

Device	Package	Shipping
TIP140	SOT−93 (TO−218)	30 Units / Rail
TIP140G	SOT−93 (TO−218) (Pb−Free)	30 Units / Rail
TIP141	SOT−93 (TO−218)	30 Units / Rail
TIP141G	SOT−93 (TO−218) (Pb−Free)	30 Units / Rail
TIP142	SOT−93 (TO−218)	30 Units / Rail
TIP142G	SOT−93 (TO−218) (Pb−Free)	30 Units / Rail
TIP145	SOT−93 (TO−218)	30 Units / Rail
TIP145G	SOT−93 (TO−218) (Pb−Free)	30 Units / Rail
TIP146	SOT−93 (TO−218)	30 Units / Rail
TIP146G	SOT−93 (TO−218) (Pb−Free)	30 Units / Rail
TIP147	SOT−93 (TO−218)	30 Units / Rail
TIP147G	SOT−93 (TO−218) (Pb−Free)	30 Units / Rail

ELECTRICAL CHARACTERISTICS (T_C = 25°C unless otherwise noted)

Characteristic		Symbol	Min	Typ	Max	Unit
OFF CHARACTERISTICS						
Collector−Emitter Sustaining Voltage (Note 2) (I_C = 30 mA, I_B = 0)	TIP140, TIP145 TIP141, TIP146 TIP142, TIP147	$V_{CEO(sus)}$	60 80 100	– – –	– – –	Vdc
Collector Cutoff Current (V_{CE} = 30 Vdc, I_B = 0) (V_{CE} = 40 Vdc, I_B = 0) (V_{CE} = 50 Vdc, I_B = 0)	TIP140, TIP145 TIP141, TIP146 TIP142, TIP147	I_{CEO}	– – –	– – –	2.0 2.0 2.0	mA
Collector Cutoff Current (V_{CB} = 60 V, I_E = 0) (V_{CB} = 80 V, I_E = 0) (V_{CB} = 100 V, I_E = 0)	TIP140, TIP145 TIP141, TIP146 TIP142, TIP147	I_{CBO}	– – –	– – –	1.0 1.0 1.0	mA
Emitter Cutoff Current (V_{BE} = 5.0 V)		I_{EBO}	–	–	2 0	mA
ON CHARACTERISTICS (Note 2)						
DC Current Gain (I_C = 5.0 A, V_{CE} = 4.0 V) (I_C = 10 A, V_{CE} = 4.0 V)		h_{FE}	1000 500	– –	– –	–
Collector−Emitter Saturation Voltage (I_C = 5.0 A, I_B = 10 mA) (I_C = 10 A, I_B = 40 mA)		$V_{CE(sat)}$	– –	– –	2.0 3.0	Vdc
Base−Emitter Saturation Voltage (I_C = 10 A, I_B = 40 mA)		$V_{BE(sat)}$	–	–	3.5	Vdc
Base−Emitter On Voltage (I_C = 10 A, V_{CE} = 4.0 Vdc)		$V_{BE(on)}$	–	–	3.0	Vdc
SWITCHING CHARACTERISTICS						
Resistive Load (See Figure 1)						
Delay Time	(V_{CC} = 30 V, I_C = 5.0 A, I_B = 20 mA, Duty Cycle ≤ 2.0%, I_{B1} = I_{B2}, R_C & R_B Varied, T_J = 25°C)	t_d	–	0.15	–	μs
Rise Time		t_r	–	0.55	–	μs
Storage Time		t_s	–	2.5	–	μs
Fall Time		t_f	–	2.5	–	μs

2. Pulse Test: Pulse Width = 300 μs, Duty Cycle ≤ 2.0%.

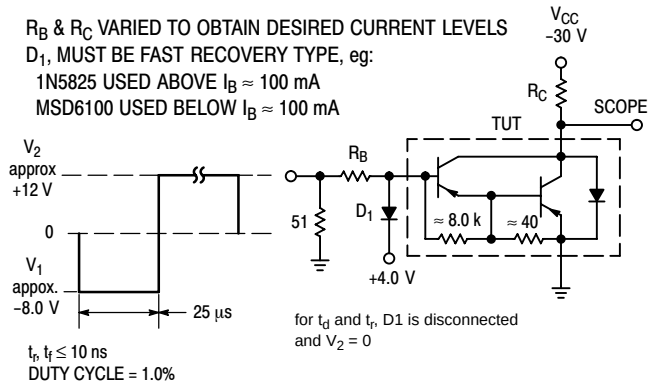

For NPN test circuit reverse diode and voltage polarities.

Figure 1. Switching Times Test Circuit

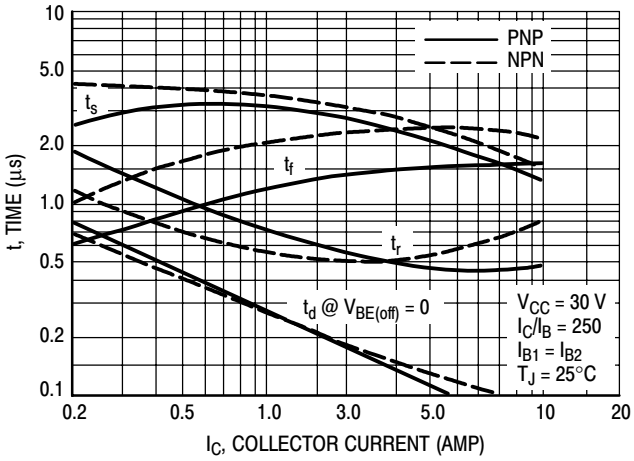

Figure 2. Switching Times

TYPICAL CHARACTERISTICS

NPN
TIP140, TIP141, TIP142

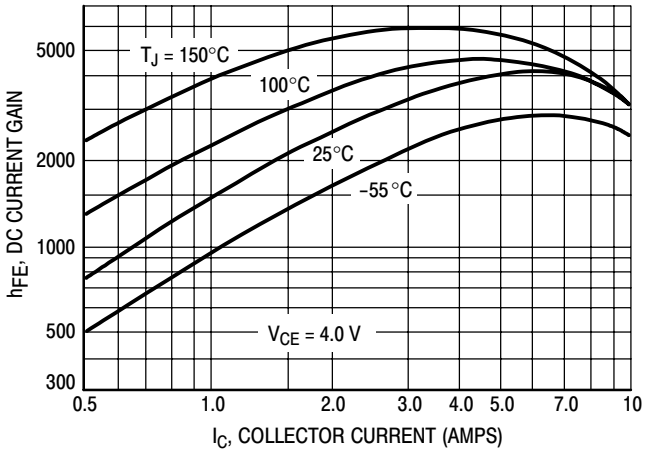

PNP
TIP145, TIP146, TIP147

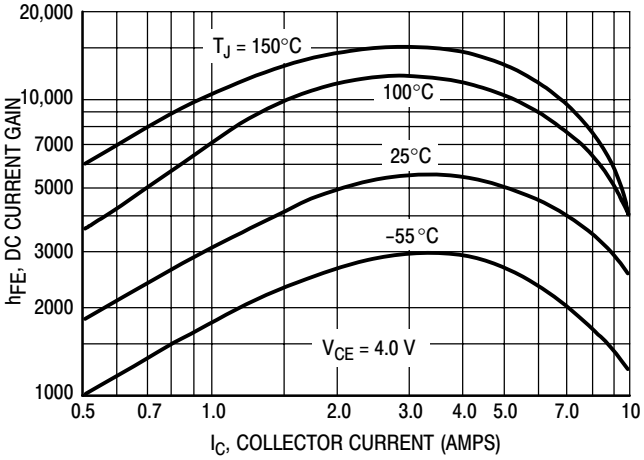

Figure 3. DC Current Gain versus Collector Current

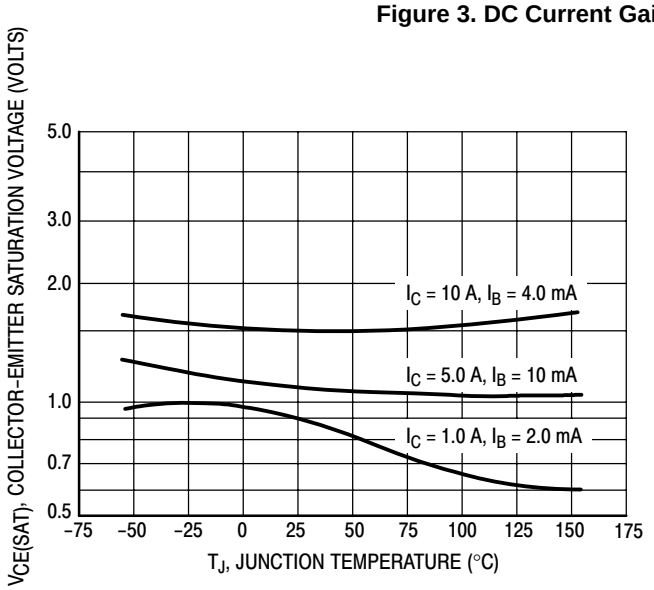

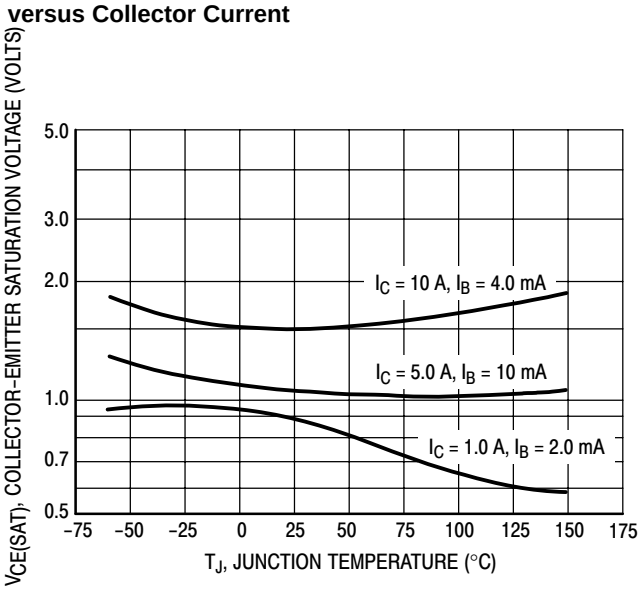

Figure 4. Collector−Emitter Saturation Voltage

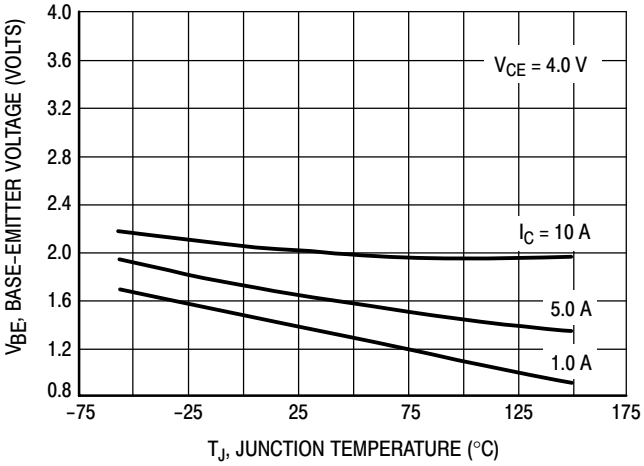

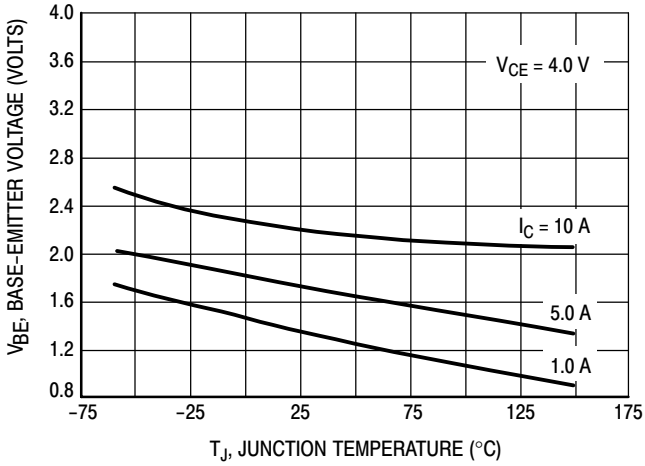

Figure 5. Base−Emitter Voltage

ACTIVE−REGION SAFE OPERATING AREA

There are two limitations on the power handling ability of a transistor: average junction temperature and second breakdown. Safe operating area curves indicate $I_C - V_{CE}$ limits of the transistor that must be observed for reliable operation; i.e., the transistor must not be subjected to greater dissipation than the curves indicate.

The data of Figure 6 is based on $T_{J(pk)} = 150°C$; T_C is variable depending on conditions. At high case temperatures, thermal limitations will reduce the power that can be handled to values less than the limitations imposed by second breakdown.

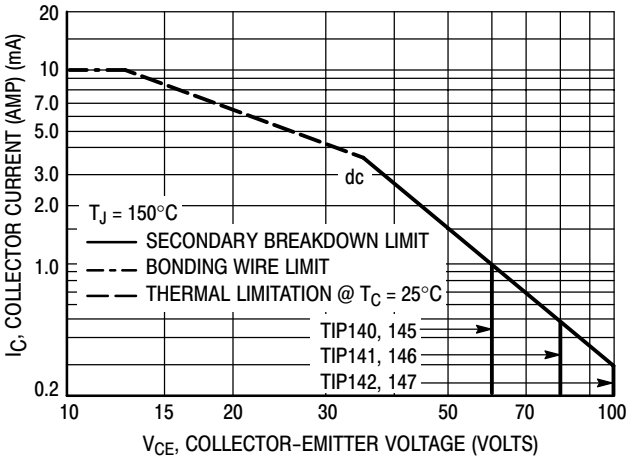

Figure 6. Active−Region Safe Operating Area

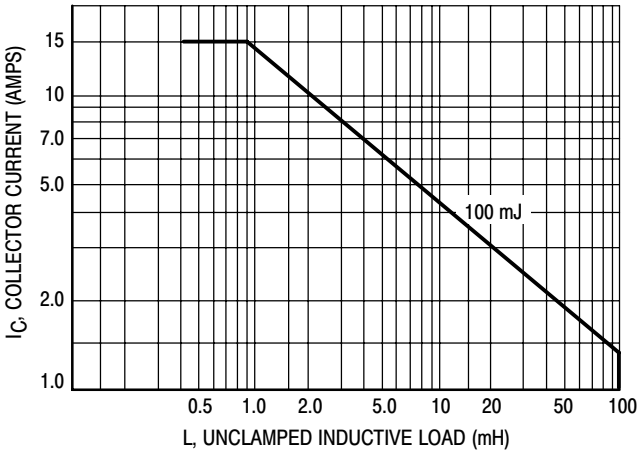

Figure 7. Unclamped Inductive Load

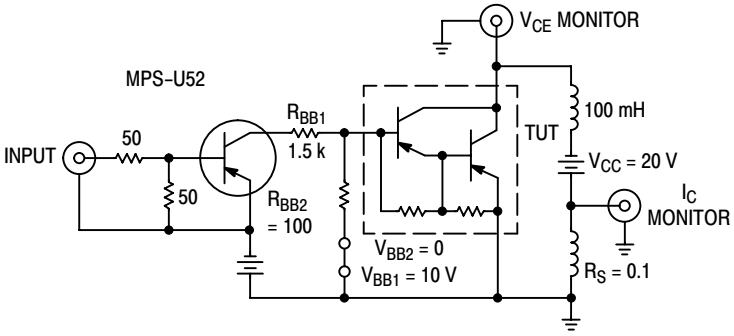

TEST CIRCUIT

NOTE 1: Input pulse width is increased until I_{CM} = 1.42 A.
NOTE 2: For NPN test circuit reverse polarities.

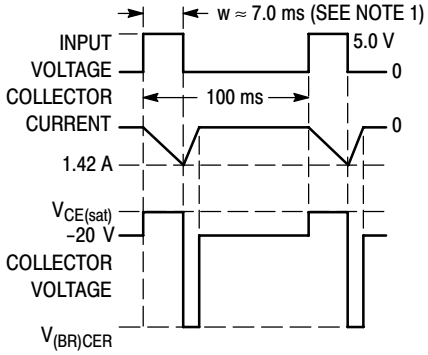

VOLTAGE AND CURRENT WAVEFORMS

Figure 8. Inductive Load

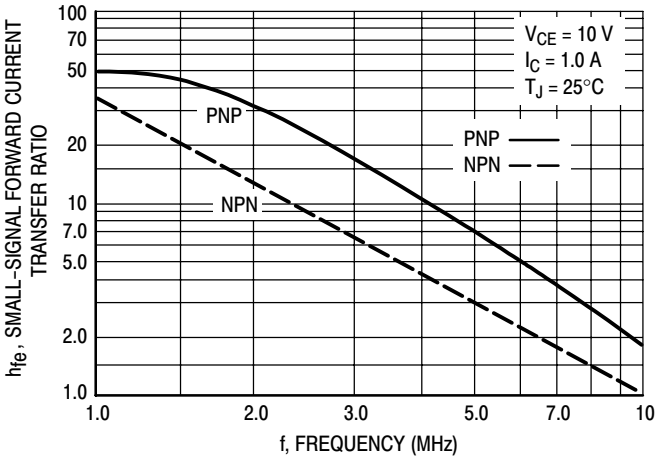

Figure 9. Magnitude of Common Emitter Small−Signal Short−Circuit Forward Current Transfer Ratio

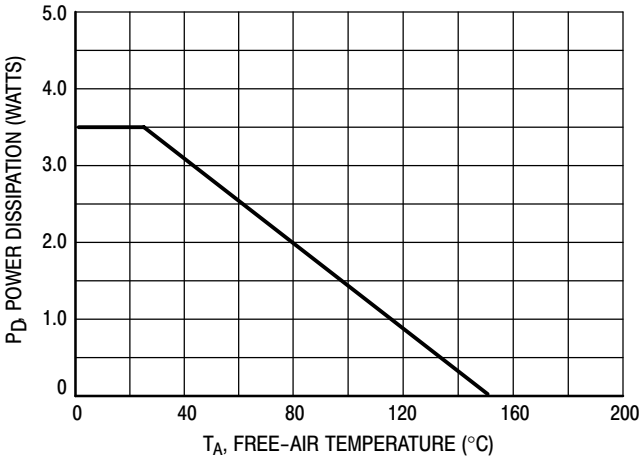

Figure 10. Free−Air Temperature Power Derating

PACKAGE DIMENSIONS

SOT−93 (TO−218)
CASE 340D−02
ISSUE E

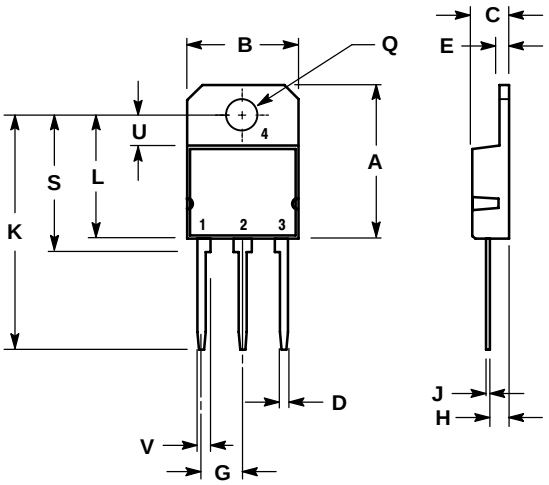

NOTES:
1. DIMENSIONING AND TOLERANCING PER ANSI Y14.5M, 1982.
2. CONTROLLING DIMENSION: MILLIMETER.

	MILLIMETERS		INCHES	
DIM	MIN	MAX	MIN	MAX
A	---	20.35	---	0.801
B	14.70	15.20	0.579	0.598
C	4.70	4.90	0.185	0.193
D	1.10	1.30	0.043	0.051
E	1.17	1.37	0.046	0.054
G	5.40	5.55	0.213	0.219
H	2.00	3.00	0.079	0.118
J	0.50	0.78	0.020	0.031
K	31.00 REF		1.220 REF	
L	---	16.20	---	0.638
Q	4.00	4.10	0.158	0.161
S	17.80	18.20	0.701	0.717
U	4.00 REF		0.157 REF	
V	1.75 REF		0.069	

STYLE 1:
PIN 1. BASE
2. COLLECTOR
3. EMITTER
4. COLLECTOR

ON Semiconductor and ON are registered trademarks of Semiconductor Components Industries, LLC (SCILLC). SCILLC reserves the right to make changes without further notice to any products herein. SCILLC makes no warranty, representation or guarantee regarding the suitability of its products for any particular purpose, nor does SCILLC assume any liability arising out of the application or use of any product or circuit, and specifically disclaims any and all liability, including without limitation special, consequential or incidental damages. “Typical” parameters which may be provided in SCILLC data sheets and/or specifications can and do vary in different applications and actual performance may vary over time. All operating parameters, including “Typicals” must be validated for each customer application by customer’s technical experts. SCILLC does not convey any license under its patent rights nor the rights of others. SCILLC products are not designed, intended, or authorized for use as components in systems intended for surgical implant into the body, or other applications intended to support or sustain life, or for any other application in which the failure of the SCILLC product could create a situation where personal injury or death may occur. Should Buyer purchase or use SCILLC products for any such unintended or unauthorized application, Buyer shall indemnify and hold SCILLC and its officers, employees, subsidiaries, affiliates, and distributors harmless against all claims, costs, damages, and expenses, and reasonable attorney fees arising out of, directly or indirectly, any claim of personal injury or death associated with such unintended or unauthorized use, even if such claim alleges that SCILLC was negligent regarding the design or manufacture of the part. SCILLC is an Equal Opportunity/Affirmative Action Employer. This literature is subject to all applicable copyright laws and is not for resale in any manner.

PUBLICATION ORDERING INFORMATION

LITERATURE FULFILLMENT:
Literature Distribution Center for ON Semiconductor
P.O. Box 61312, Phoenix, Arizona 85082−1312 USA
Phone: 480−829−7710 or 800−344−3860 Toll Free USA/Canada
Fax: 480−829−7709 or 800−344−3867 Toll Free USA/Canada
Email: orderlit@onsemi.com

N. American Technical Support: 800−282−9855 Toll Free USA/Canada

Japan: ON Semiconductor, Japan Customer Focus Center
2−9−1 Kamimeguro, Meguro−ku, Tokyo, Japan 153−0051
Phone: 81−3−5773−3850

ON Semiconductor Website: http://onsemi.com

Order Literature: http://www.onsemi.com/litorder

For additional information, please contact your local Sales Representative.