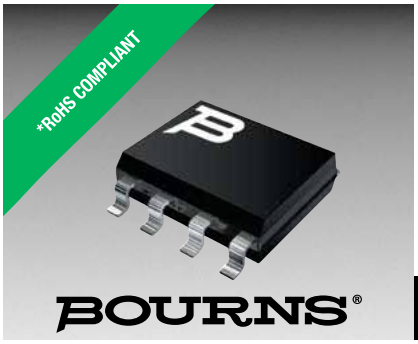

TISP8200HDM BUFFERED P-GATE SCR DUAL
TISP8201HDM BUFFERED N-GATE SCR DUAL

COMPLEMENTARY BUFFERED-GATE SCRS FOR DUAL POLARITY SLIC OVERVOLTAGE PROTECTION

TISP820xHDM Overvoltage Protectors

High Performance Protection for SLICs with +ve & -ve Battery Supplies

TISP8200HDM Negative Overvoltage Protector
– Wide -20 to -110 V Programming Range
– Low +15 mA Max. Gate Triggering Current
– High -150 mA Min. Holding Current

TISP8201HDM Positive Overvoltage Protector
– Wide +20 to +110 V Programming Range
– Low -15 mA Max. Gate Triggering Current
– +20 mA Min. Holding Current

Rated for International Surge Wave Shapes

Wave Shape	Standard	I_{PPSM} A
2/10	GR-1089-CORE	500
10/700	ITU-T K.20/21/45	150
10/1000	GR-1089-CORE	100

..... UL Recognized Component

Circuit Application Diagram

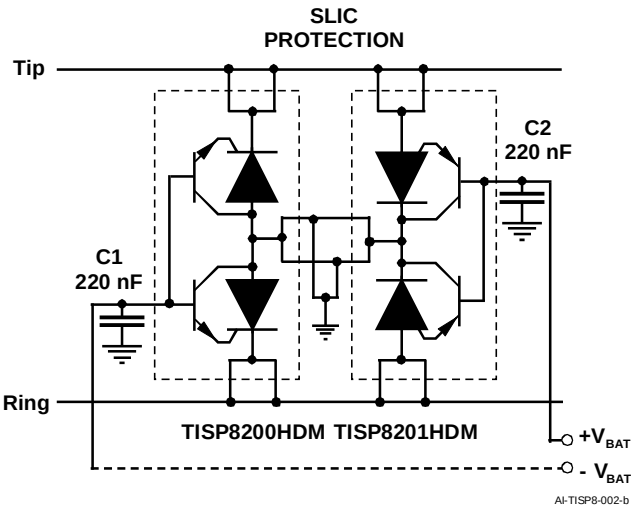

Additional Information

Click these links for more information:

PRODUCT SELECTOR | TECHNICAL LIBRARY | INVENTORY | SAMPLES | CONTACT

Agency Recognition

Description	
UL	File Number: E215609

Description

The TISP8200HDM/TISP8201HDM combination has been designed to protect dual polarity supply rail monolithic SLICs (Subscriber Line Interface Circuits) against overvoltages on the telephone line caused by lightning, a.c. power contact and induction. Protection against negative overvoltages is given by the TISP8200HDM. Protection against positive overvoltages is given by the TISP8201HDM. Both parts are in 8-SOIC (210 mil) surface mount packages.

The TISP8200HDM has an array of two buffered P-gate SCRs with a common anode connection. Each SCR cathode and gate has a separate terminal connection. The NPN buffer transistors reduce the gate supply current. In use, the cathodes of the TISP8200HDM SCRs are connected to the two conductors of the POTS line. The gates are connected to the appropriate negative voltage battery feed of the SLIC driving the line conductor pair, so that the TISP8200HDM protection voltage tracks the SLIC negative supply voltage. The anode of the TISP8200HDM is connected to the SLIC common. Negative overvoltages are initially clipped close to the SLIC negative supply by emitter follower action of the NPN buffer transistor. If sufficient clipping current flows, the SCR will regenerate and switch into a low voltage on-state condition. As the overvoltage subsides the high holding current of the SCR helps prevent d.c. latchup.

The TISP8201HDM has an array of two buffered N-gate SCRs with a common cathode connection. Each SCR anode and gate has a separate terminal connection. The PNP buffer transistors reduce the gate supply current. In use, the anodes of the TISP8201HDM SCRs are connected to the two conductors of the POTS line. The gates are connected to the appropriate positive voltage battery feed of the SLIC driving that line pair, so that the TISP8201HDM protection voltage tracks the SLIC positive supply voltage. The cathode of the TISP8201HDM is connected to the SLIC common. Positive overvoltages are initially clipped close to the SLIC positive supply by emitter follower action of the PNP buffer transistor. If sufficient clipping current flows the SCR will regenerate and switch into a low voltage on-state condition. As the overvoltage subsides the SLIC pulls the conductor voltage down to its normal negative value and this commutates the conducting SCR into a reverse biased condition.

WARNING Cancer and Reproductive Harm
www.P65Warnings.ca.gov

OCTOBER 2005 – REVISED JULY 2019

*RoHS Directive 2015/863, Mar 31, 2015 and Annex.
Specifications are subject to change without notice.
Users should verify actual device performance in their specific applications.
The products described herein and this document are subject to specific legal disclaimers as set forth on the last page of this document, and at
www.bourns.com/docs/legal/disclaimer.pdf.

TISP8200HDM 8-SOIC (210 mil) Package (Top View)

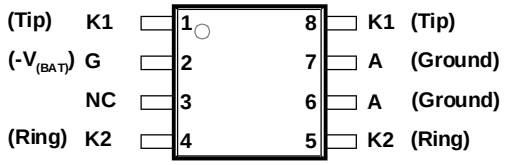

NC - No internal connection
Terminal typical application names shown in parenthesis

MD-8SOIC(210)-007-a

TISP8201HDM 8-SOIC (210 mil) Package (Top View)

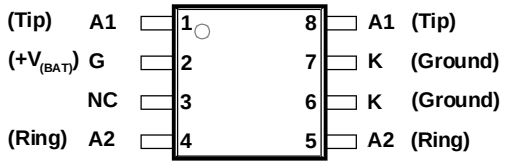

NC - No internal connection
Terminal typical application names shown in parenthesis

MD-8SOIC(210)-008-a

TISP8200HDM Device Symbol

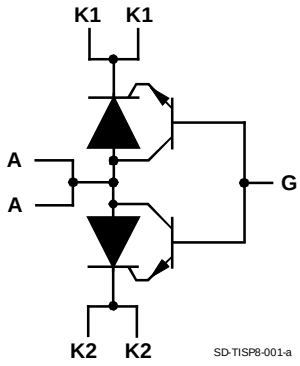

SD-TISP8-001-a

TISP8201HDM Device Symbol

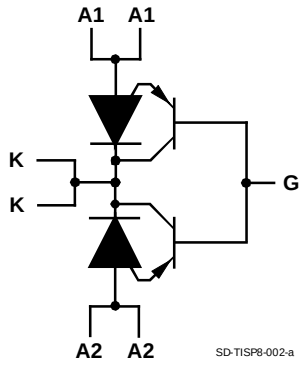

SD-TISP8-002-a

How to Order

Device	Package	Carrier	Order As	Marking Code	Standard Quantity
TISP8200HDM	8-SOIC (210 mil)	Embossed Tape Reeled	TISP8200HDMR-S	8200H	2000
TISP8201HDM			TISP8201HDMR-S	8201H	

Specifications are subject to change without notice.
Users should verify actual device performance in their specific applications.
The products described herein and this document are subject to specific legal disclaimers as set forth on the last page of this document, and at www.bourns.com/docs/legal/disclaimer.pdf.

TISP8200HDM Absolute Maximum Ratings, T_A = 25 °C (Unless Otherwise Noted)

Rating	Symbol	Value	Unit
Repetitive peak off-state voltage, V_{GK} = 0	V_{DRM}	-120	V
Repetitive peak reverse voltage, V_{GA} = -70 V	V_{RRM}	120	
Non-repetitive peak impulse current (see Notes 1, 2 and 3) 2/10 µs (Telcordia GR-1089-CORE, 2/10 µs voltage wave shape) 5/310 µs (ITU-T K.44, 10/700 µs voltage wave shape used in K.20/21/45) 10/1000 µs (Telcordia GR-1089-CORE, 10/1000 µs voltage wave shape)	I_{PPSM}	 -500 -150 -100	A
Non-repetitive peak on-state current, 50/60 Hz (see Notes 1, 2, 3 and 4) 10 ms 1 s 7 s 900 s	I_{TSM}	 60 14 7 3.5	A
Junction temperature	T_J	-55 to +150	°C
Storage temperature range	T_{stg}	-65 to +150	°C

NOTES: 1. Initially the device must be in thermal equilibrium with T_J = 25 °C. The surge may be repeated after the device returns to its initial conditions.
2. These non-repetitive rated currents are peak values. The rated current values may be applied to any cathode-anode terminal pair.
3. Rated currents only apply if pins 1 & 8 (K1,Tip) are connected together, pins 4 & 5 (K2, Ring) are connected together and pins 6 & 7 (A, Ground) are connected together.
4. These non-repetitive rated terminal currents are for the TISP8200HDM and TISP8201HDM together. Device (A)-terminal positive current values are conducted by the TISP8201HDM and (K)-terminal negative current values by the TISP8200HDM.

TISP8201HDM Absolute Maximum Ratings, T_A = 25 °C (Unless Otherwise Noted)

Rating	Symbol	Value	Unit
Repetitive peak off-state voltage, V_{GA} = 0	V_{DRM}	120	V
Repetitive peak reverse voltage, V_{GK} = 70 V	V_{RRM}	-120	
Non-repetitive peak impulse current (see Notes 5, 6 and 7) 2/10 µs (Telcordia GR-1089-CORE, 2/10 µs voltage wave shape) 5/310 µs (ITU-T K.44, 10/700 µs voltage wave shape used in K.20/21/45) 10/1000 µs (Telcordia GR-1089-CORE, 10/1000 µs voltage wave shape)	I_{PPSM}	 500 150 100	A
Non-repetitive peak on-state current, 50/60 Hz (see Notes 5, 6, 7 and 8) 10 ms 1 s 7 s 900 s	I_{TSM}	 60 14 7 3.5	A
Junction temperature	T_J	-55 to +150	°C
Storage temperature range	T_{stg}	-65 to +150	°C

NOTES: 5. Initially the device must be in thermal equilibrium with T_J = 25 °C. The surge may be repeated after the device returns to its initial conditions.
6. These non-repetitive rated currents are peak values. The rated current values may be applied to any cathode-anode terminal pair.
7. Rated currents only apply if pins 1 & 8 (A1, Tip) are connected together, pins 4 & 5 (A2, Ring) are connected together and pins 6 & 7 (K, Ground) are connected together.
8. These non-repetitive rated terminal currents are for the TISP8200HDM and TISP8201HDM together. Device (A)-terminal positive current values are conducted by the TISP8201HDM and (K)-terminal negative current values by the TISP8200HDM.

Recommended Operating Conditions

See Figure 3	Min	Typ	Max	Unit
C1, C2 Gate decoupling capacitor		220		nF

Specifications are subject to change without notice.
Users should verify actual device performance in their specific applications.
The products described herein and this document are subject to specific legal disclaimers as set forth on the last page of this document, and at www.bourns.com/docs/legal/disclaimer.pdf.

TISP8200HDM Electrical Characteristics, T_A = 25 °C (Unless Otherwise Noted)

Parameter		Test Conditions		Min	Typ	Max	Unit
I_{DRM}	Repetitive peak off-state current	$V_D = V_{DRM}$, V_{GK} = 0				-5	μA
I_{RRM}	Repetitive peak reverse current	$V_R = V_{RRM}$, V_{GA} = -70 V				5	μA
$V_{(BO)}$	Breakover voltage	dv/dt = -250 V/ms, R_{SOURCE} = 300 Ω, V_{GA} = -80 V				-82	V
$V_{(BO)}$	Impulse breakover voltage	dv/dt ≤ -1000 V/μs, Linear voltage ramp, Maximum ramp value = -500 V di/dt = -20 A/μs, Linear current ramp, Maximum ramp value = -10 A V_{GA} = -80 V				-90	V
I_H	Holding current	(I_K) I_T = -1 A, di/dt = 1 A/ms, V_{GA} = -80 V		-150			mA
I_{GT}	Gate trigger current	(I_K) I_T = -5 A, $t_{p(g)}$ ≥ 20 μs, V_{GA} = -80 V				15	mA
C_O	Off-state capacitance	f = 1 MHz, V_d = 1 V rms, Gate open	V_D = -2 V			65	pF
			V_D = -50 V			30	

TISP8201HDM Electrical Characteristics, T_A = 25 °C (Unless Otherwise Noted)

Parameter		Test Conditions		Min	Typ	Max	Unit
I_{DRM}	Repetitive peak off-state current	$V_D = V_{DRM}$, V_{GA} = 0				5	μA
I_{RRM}	Repetitive peak reverse current	$V_R = V_{RRM}$, V_{GK} = 70 V				-5	μA
$V_{(BO)}$	Breakover voltage	dv/dt = 250 V/ms, R_{SOURCE} = 300 Ω, V_{GK} = 80 V				82	V
$V_{(BO)}$	Impulse breakover voltage	dv/dt ≤ 1000 V/μs, Linear voltage ramp, Maximum ramp value = 500 V di/dt = 20 A/μs, Linear current ramp, Maximum ramp value = 10 A V_{GK} = 80 V				90	V
I_H	Holding current	(I_A) I_T = 1 A, di/dt = -1 A/ms, V_{GK} = 80 V		20			mA
I_{GT}	Gate trigger current	(I_A) I_T = 5 A, $t_{p(g)}$ ≥ 20 μs, V_{GK} = 80 V				-15	mA
C_O	Off-state capacitance	f = 1 MHz, V_d = 1 V rms, Gate open	V_D = 2 V			50	pF
			V_D = 50 V			30	

Thermal Characteristics

Parameter		Test Conditions	Min	Typ	Max	Unit
$R_{\theta JA}$	Junction to ambient thermal resistance	EIA/JESD51-7 PCB, EIA/JESD51-2 Environment, P_{TOT} = 4 W (See Note 9)		55		°C/W

NOTE 9. EIA/JESD51-7 high effective thermal conductivity test board (multi-layer) connected with 0.6 mm printed wiring track widths.

Specifications are subject to change without notice.
Users should verify actual device performance in their specific applications.
The products described herein and this document are subject to specific legal disclaimers as set forth on the last page of this document, and at www.bourns.com/docs/legal/disclaimer.pdf.

Parameter Measurement Information

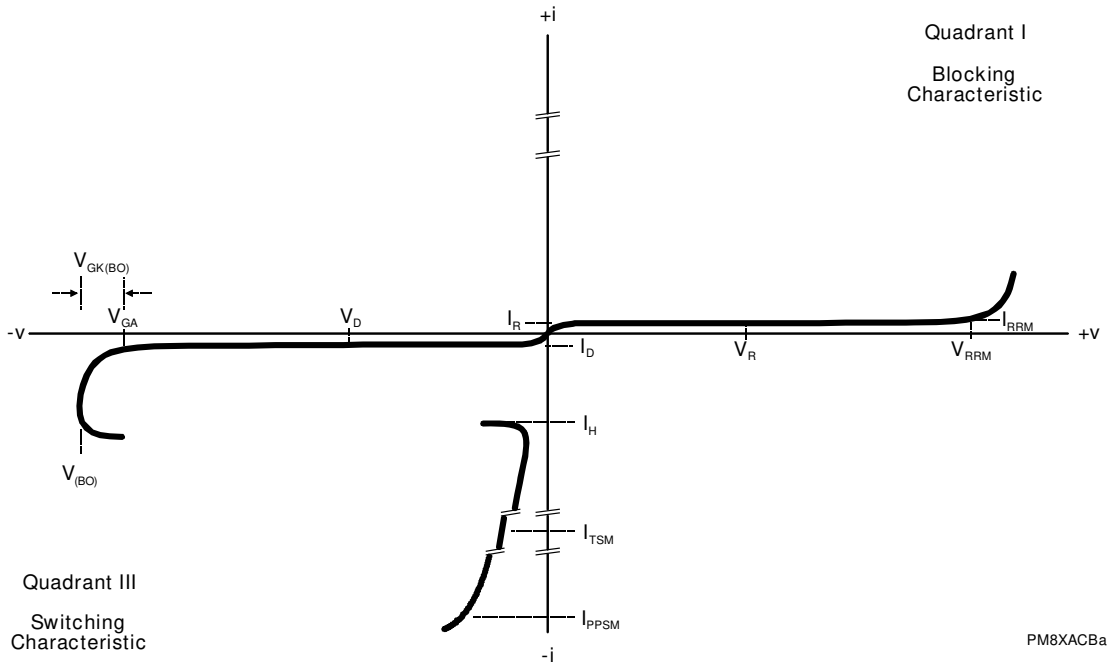

Figure 1. TISP8200HDM KA Terminal Characteristic

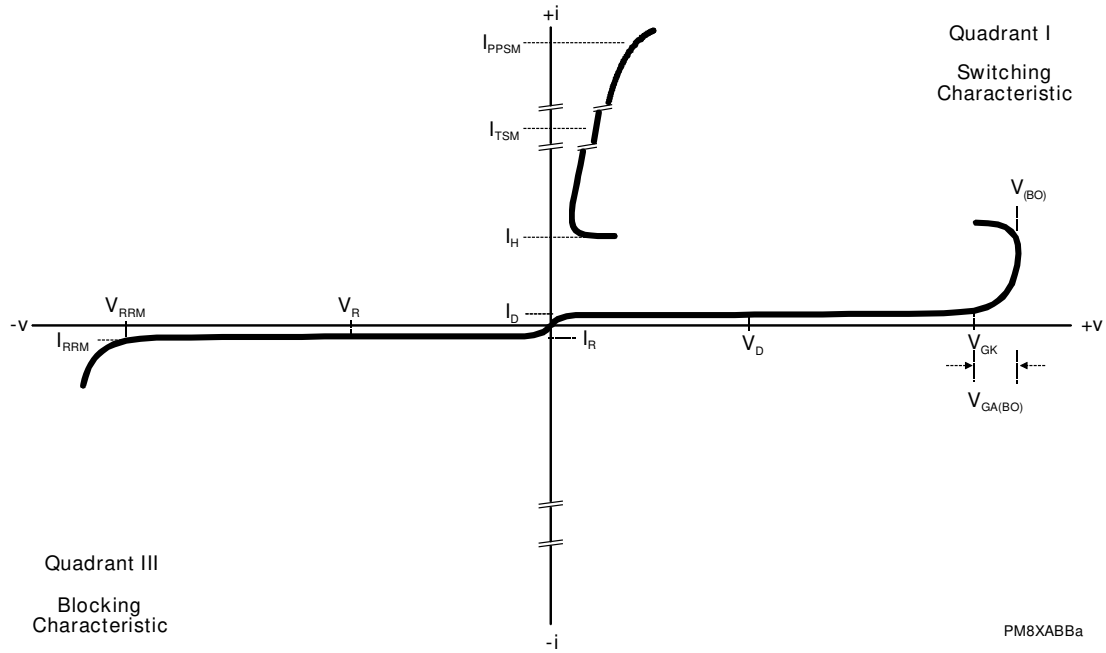

Figure 2. TISP8201HDM AK Terminal Characteristic

Specifications are subject to change without notice.
Users should verify actual device performance in their specific applications.
The products described herein and this document are subject to specific legal disclaimers as set forth on the last page of this document, and at www.bourns.com/docs/legal/disclaimer.pdf.

Applications Information

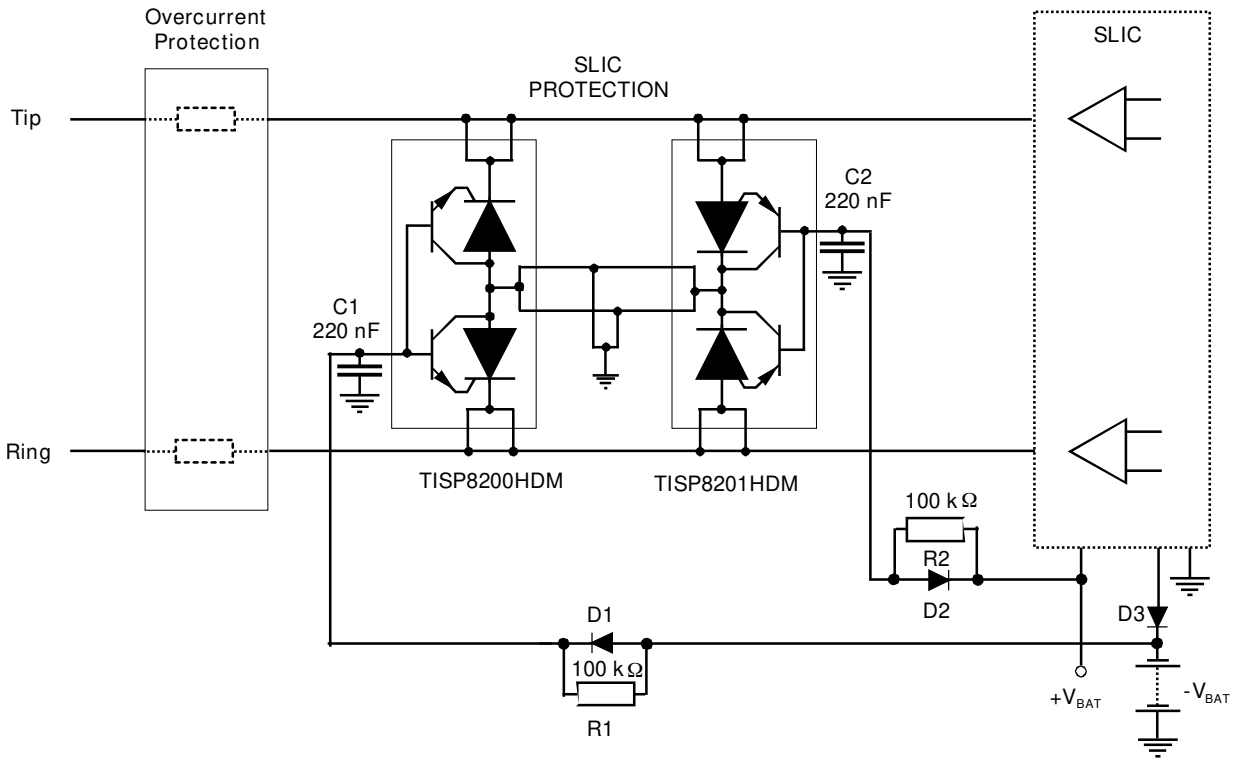

Figure 3. Typical Application Circuit

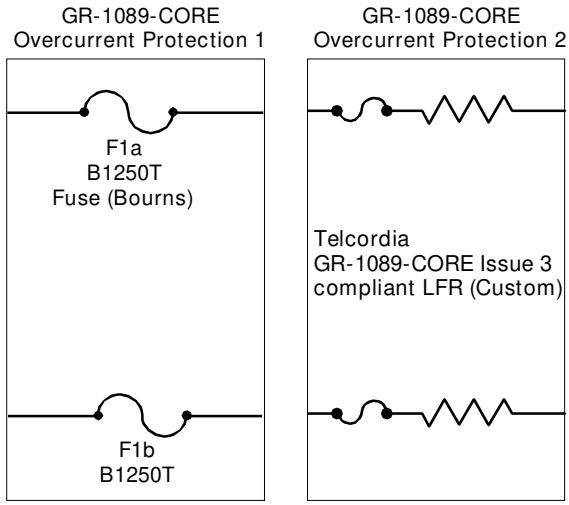

Figure 4. Typical Overcurrent Protection

"TISP" is a trademark of Bourns, Ltd., a Bourns Company, and is registered in the U.S. Patent and Trademark Office.
"Bourns" is a registered trademark of Bourns, Inc. in the U.S. and other countries.

Specifications are subject to change without notice.
Users should verify actual device performance in their specific applications.
The products described herein and this document are subject to specific legal disclaimers as set forth on the last page of this document, and at www.bourns.com/docs/legal/disclaimer.pdf.

Legal Disclaimer Notice

BOURNS®

This legal disclaimer applies to purchasers and users of Bourns® products manufactured by or on behalf of Bourns, Inc. and its affiliates (collectively, "Bourns").

Unless otherwise expressly indicated in writing, Bourns® products and data sheets relating thereto are subject to change without notice. Users should check for and obtain the latest relevant information and verify that such information is current and complete before placing orders for Bourns® products.

The characteristics and parameters of a Bourns® product set forth in its data sheet are based on laboratory conditions, and statements regarding the suitability of products for certain types of applications are based on Bourns' knowledge of typical requirements in generic applications. The characteristics and parameters of a Bourns® product in a user application may vary from the data sheet characteristics and parameters due to (i) the combination of the Bourns® product with other components in the user's application, or (ii) the environment of the user application itself. The characteristics and parameters of a Bourns® product also can and do vary in different applications and actual performance may vary over time. Users should always verify the actual performance of the Bourns® product in their specific devices and applications, and make their own independent judgments regarding the amount of additional test margin to design into their device or application to compensate for differences between laboratory and real world conditions.

Unless Bourns has explicitly designated an individual Bourns® product as meeting the requirements of a particular industry standard (e.g., ISO/TS 16949) or a particular qualification (e.g., UL listed or recognized), Bourns is not responsible for any failure of an individual Bourns® product to meet the requirements of such industry standard or particular qualification. Users of Bourns® products are responsible for ensuring compliance with safety-related requirements and standards applicable to their devices or applications.

Bourns® products are not recommended, authorized or intended for use in nuclear, lifesaving, life-critical or life-sustaining applications, nor in any other applications where failure or malfunction may result in personal injury, death, or severe property or environmental damage. Unless expressly and specifically approved in writing by two authorized Bourns representatives on a case-by-case basis, use of any Bourns® products in such unauthorized applications might not be safe and thus is at the user's sole risk. Life-critical applications include devices identified by the U.S. Food and Drug Administration as Class III devices and generally equivalent classifications outside of the United States.

Bourns expressly identifies those Bourns® standard products that are suitable for use in automotive applications on such products' data sheets in the section entitled "Applications." Unless expressly and specifically approved in writing by two authorized Bourns representatives on a case-by-case basis, use of any other Bourns® standard products in an automotive application might not be safe and thus is not recommended, authorized or intended and is at the user's sole risk. If Bourns expressly identifies a sub-category of automotive application in the data sheet for its standard products (such as infotainment or lighting), such identification means that Bourns has reviewed its standard product and has determined that if such Bourns® standard product is considered for potential use in automotive applications, it should only be used in such sub-category of automotive applications. Any reference to Bourns® standard product in the data sheet as compliant with the AEC-Q standard or "automotive grade" does not by itself mean that Bourns has approved such product for use in an automotive application.

Bourns® standard products are not tested to comply with United States Federal Aviation Administration standards generally or any other generally equivalent governmental organization standard applicable to products designed or manufactured for use in aircraft or space applications. Bourns expressly identifies Bourns® standard products that are suitable for use in aircraft or space applications on such products' data sheets in the section entitled "Applications." Unless expressly and specifically approved in writing by two authorized Bourns representatives on a case-by-case basis, use of any other Bourns® standard product in an aircraft or space application might not be safe and thus is not recommended, authorized or intended and is at the user's sole risk.

The use and level of testing applicable to Bourns® custom products shall be negotiated on a case-by-case basis by Bourns and the user for which such Bourns® custom products are specially designed. Absent a written agreement between Bourns and the user regarding the use and level of such testing, the above provisions applicable to Bourns® standard products shall also apply to such Bourns® custom products.

Users shall not sell, transfer, export or re-export any Bourns® products or technology for use in activities which involve the design, development, production, use or stockpiling of nuclear, chemical or biological weapons or missiles, nor shall they use Bourns® products or technology in any facility which engages in activities relating to such devices. The foregoing restrictions apply to all uses and applications that violate national or international prohibitions, including embargos or international regulations. Further, Bourns® products and Bourns technology and technical data may not under any circumstance be exported or re-exported to countries subject to international sanctions or embargoes. Bourns® products may not, without prior authorization from Bourns and/or the U.S. Government, be resold, transferred, or re-exported to any party not eligible to receive U.S. commodities, software, and technical data.

To the maximum extent permitted by applicable law, Bourns disclaims (i) any and all liability for special, punitive, consequential, incidental or indirect damages or lost revenues or lost profits, and (ii) any and all implied warranties, including implied warranties of fitness for particular purpose, non-infringement and merchantability.

For your convenience, copies of this Legal Disclaimer Notice with German, Spanish, Japanese, Traditional Chinese and Simplified Chinese bilingual versions are available at:

Web Page: http://www.bourns.com/legal/disclaimers-terms-and-policies

PDF: http://www.bourns.com/docs/Legal/disclaimer.pdf