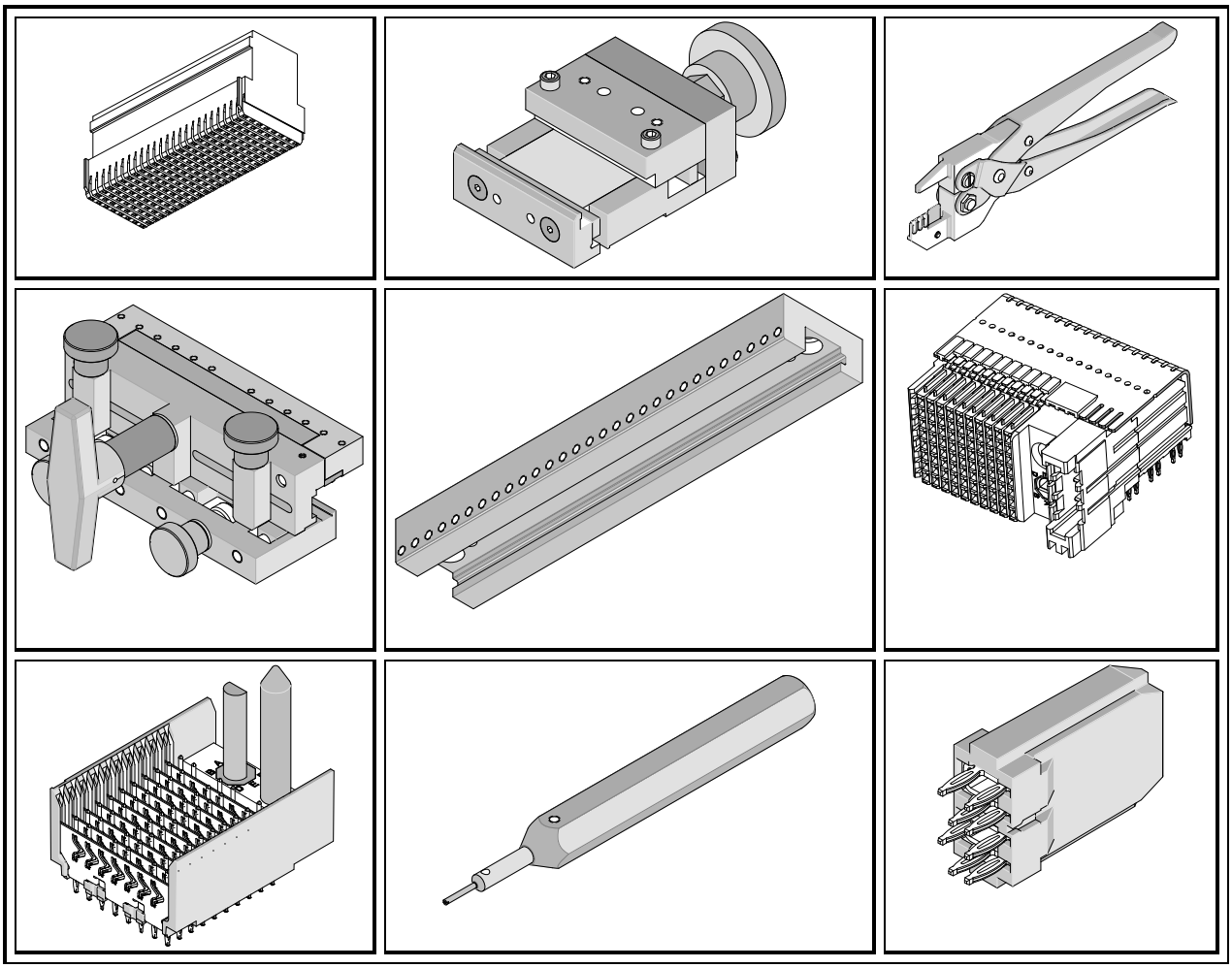

# VHDM® AND VHDM-HSD™
# INSTALLATION and REPAIR TOOLING
# Operation Manual
# Order No. 62201-0999

- Description
- Operation
- Maintenance

# WARNING

**NEVER** OPERATE, SERVICE, INSTALL, OR ADJUST THIS TOOL WITHOUT PROPER INSTRUCTION AND WITHOUT FIRST READING AND UNDERSTANDING THE INSTRUCTIONS IN THIS MANUAL.

# WORK SAFELY AT ALL TIMES

## For Service, Contact Your Local Molex Sales Office

**Molex Application Tooling Group**
2200 Wellington Court
Lisle, Illinois 60532
Tel: 630-969-4550
Fax: 630-505-0049

Visit our Web site at http://www.molex.com

# Table of Contents

## SECTION

1 General Description and Available Presses

2 Installation and Operation

3 Maintenance, Spare Parts, Perishable Parts and Problem Checklist

4 Available tooling

5 Glossary of Terms

## APPENDIX

A Parts Lists and Drawings for Standard Tools

B Instruction Sheets for Repair Tools

C Parts Lists and Drawings for Customer Specials

D Product Specifications

# Section 1

## General Description and Available Presses

1.1 Description

1.2 Features

1.3 Technical Specifications

1.4 Delivery Check

1.5 Tools

1.6 Press Requirements

# General description

## 1.1 Description

This manual covers the tooling available to press Molex VHDM and HSD Back plane Power Modules, Back plane Connectors, and Daughter Card Modules into printed circuit boards. Repair tools and custom tools are also covered. The tooling is designed to go into a flat platen press. Operation is simple: Position a printed circuit board on the customer supplied support. Then manually insert a connector(s) into the pc board. Position the loading head into the connector. Actuate the press to press the connector pins into the board.

## 1.2 Features

The press-in tooling is designed so that one module will press in one connector, or several modules can be mounted in a tool holder and be used to press in any combination of connectors in one operation. See Section 1.8 (Ordering Instructions) for details.

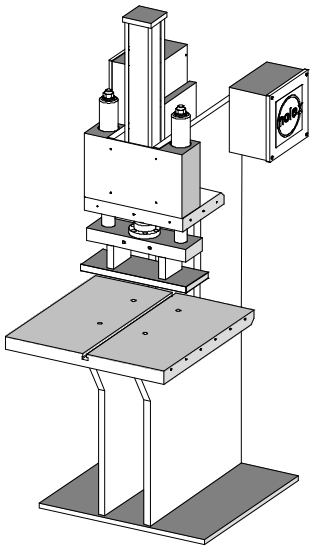

**Figure 1-1**
**62201-3800 8-TON PRESS**

## 1.3 Technical Specifications

**Dimensions and Weight**
The dimensions and weight depend on the tooling used and the size of the pc board support. The dimensions and weights of the various tooling components are given in the assembly drawings in Appendixes A, B, and C.

**Rate**
90 connectors pressed in (one at a time) per hour depending on operator skill.

## 1.4 Delivery Check

Carefully remove the tooling from its shipping container and check to be sure what was received matches the purchase order and no damage has occurred.

## 1.5 Tools

A metric hex wrench set will be required to assemble or disassemble tooling mounted in rails.

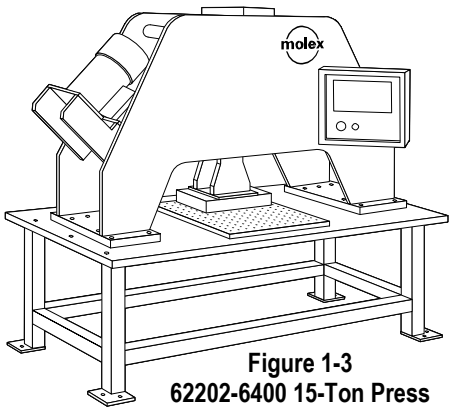


**Figure 1-3**
**62202-6400 15-Ton Press**

**Molex Presses**

Molex offers two (2) presses that are suitable for this application. (See also Figure 1-1 and 1-2. They are:

| | |
|---|---|
| 62201-3800 | 8-ton Pneumatic Flat Platen Press |
| 62200-6400 | 15-ton Electric Flat Platen Press |

## 1.6 Press Requirements

This tooling is designed to fit in a flat platen (or flat rock) press, capable of 66N (15 lbs) of force per pin.

| Letter | Description | Dimension (min) |
|---|---|---|
| See Figure1-3. | | |
| A | Upper Platen | 51mm by 102mm by 25.4mm (2” by 4” by 1”) |
| B | Opening | 89mm (3.5”) |
| C | Throat | 50mm (6”) |

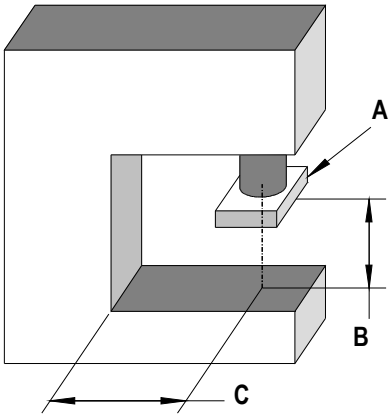


**Figure 1-3**
**PRESS THROAT DIMENSIONS**

# Section 2

## Installation and Operation

2.1 Backup for printed circuit boards

2.2 Press stroke adjustment

2.3 Installation

2.4 Operation

## 2.1 Printed Circuit Board Support

The HSD / VHDM tooling requires up to 15 lb per pin of force to press the connectors into the printed circuit boards. Therefore, a backup or support is required to prevent damage to the printed circuit boards. The support fixture should have clearance for the connector terminals when they protrude through the underside of the printed circuit board. It is also recommended that the support fixture have locating pins. Due to the custom nature of each application, Molex does not supply support and locating fixtures, the customer normally supplies them.

The following is one simple way of making a printed circuit board support and locating fixture:

1. Locate a suitable piece of material for the backup. It should be approximately 3/4 inch thick and same size or a little larger than the printed circuit board to be used. While aluminum could be used, a rigid nonconductive material such as a phenolic is preferred. (A stack of scrap p.c. boards of suitable size could be fastened together and used.)
2. Obtain a scrap p.c. board like the ones to be assembled. Attach this board to the material from step 1.
3. Using an oversize drill bit, drill through each hole where a pin from the connector will go. Drill deep enough into the lower material to be certain the pins do not bottom out when inserted (at least 5mm [0.20in] deep).
4. Locate two (2) holes on the p.c. board to use as locating points. Drill for and mount suitably sized dowel pins in these two locations on the support fixture.
5. Clear out the support for any components mounted on the underside of the printed circuit board.
6 Place a p.c. board on top of the support, located by the two pins, and check that the holes for the connector pins are aligned.
7. Pre-insert a connector in the p.c. board in the correct position.
8. Insert the press-in tool of proper size into the connector.
9. Place the support with p.c. board under the press ram.
10. Press the connector into the p.c. board and observe for any deflection of the board when the ram is at the bottom of its stroke.

## 2.2 Press Stroke Adjustment

Most presses have some means of adjusting the stroke; please refer to the appropriate manual (for the press being used) for press stroke adjustments. The stroke should be adjusted so that when the press ram stops in the down position, the bottom of the connector is flush to .155mm (.006 in.) above the surface of the printed circuit board.
See Figure 2-1.

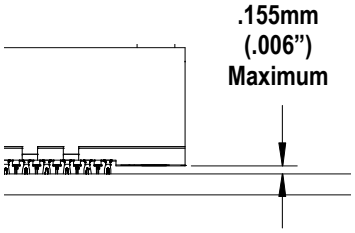


**Figure 2-1**
**MAXIMUM CLEARANCE WHEN CONNECTOR FULLY SEATED**

## 2.3 Installation

The only installation required is when you need to install insertion modules into a tooling holder. To do this, use the following procedure:

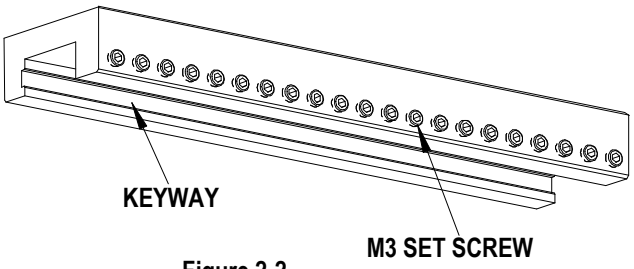


**Figure 2-2**
**TOOLING HOLDER**

1. Along the lower edge of the tooling holder is a row of M3 set screws, back these out so that they do not protrude into the inside of the holder. See Figure 2-2.
2. Slide the insertion modules into the tooling holder in the proper order. See Figure 2-3. The modules are keyed so that they cannot be put in backwards.

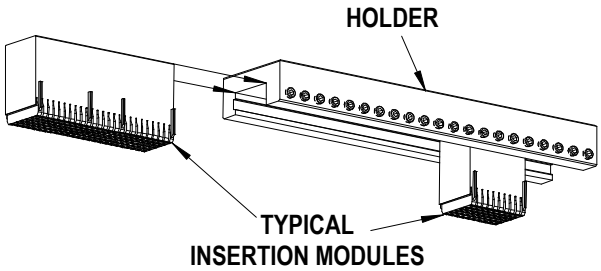


**Figure 2-3**
**MOUNTING INSERT MODULE**
**IN A MOUNTING BLOCK**

3. Now tighten the M3 set screws against the modules with one (1) screw against each power module inserter and each alignment block; and two (2) screws evenly spaced on a 6 by 10 header insertion module; and at least three (3) screws evenly spaced on a 6 by 25 header insertion module. Figure 2-4 shows a typical completed assembly.

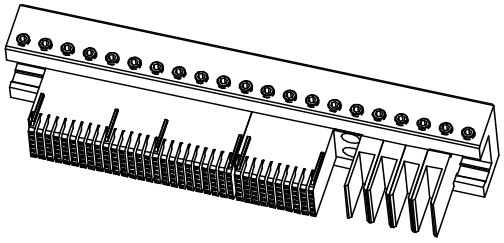

**Figure 2-4**
**TYPICAL INSERTION TOOL ASSEMBLY**

## 2.4 Operation

### Header insertion Tooling

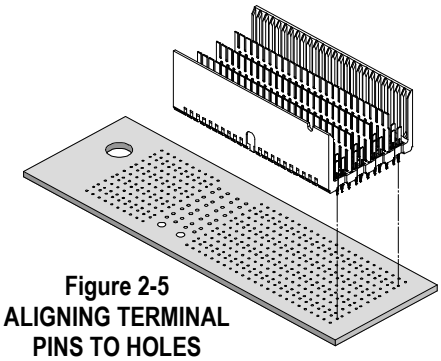

**Figure 2-5**
**ALIGNING TERMINAL**
**PINS TO HOLES**

1. Carefully locate the connector(s) on the printed circuit board and start in by hand. Make sure pin 1 is in the correct position on all connectors. See Figure 2-5.

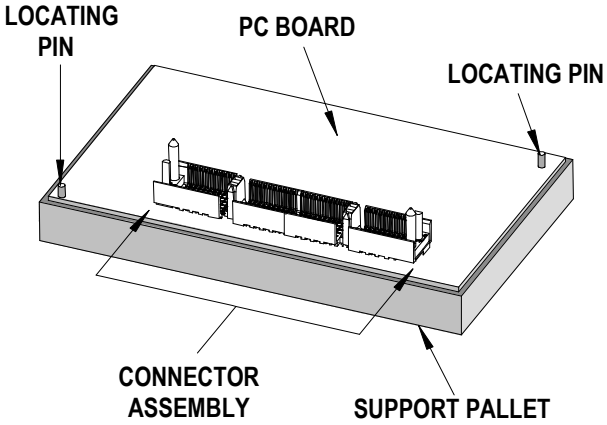


**Figure 2-6**
**CONNECTOR ASSEMBLY**
**ON PC BOARD SUPPORT PALLET**

2. Locate the pre-loaded board into the support pallet. See Figure 2-6.
3. Locate the tooling assembly in the connector assembly, carefully checking alignment. See Figure 2-7.
4. Position the pre loaded support pallet under the press platen.

**CAUTION:** Do not over tighten the setscrews as you could damage the insertion tool.

**NOTE:** See Section 4 for details on selecting modules and mounting blocks.

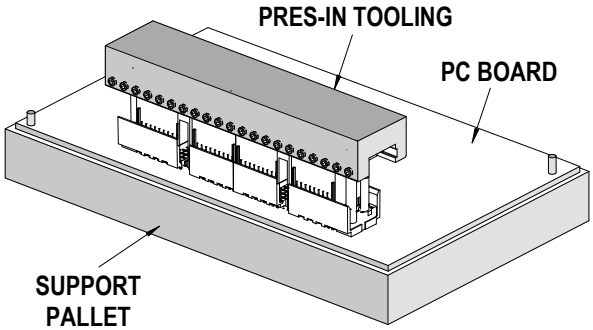


**Figure 2-7**
**TYPICAL HEADER ASSEMBLY**
**ON THE PC BOARD**

5. Cycle the press. See Section 2.1 for press stroke adjustment.
6. Remove the loaded support pallet.
7. Carefully remove the insertion tool assembly.
8. Remove the printed circuit board.

## Daughter Card Tooling

Operation for inserting Daughter Card assemblies is different because Daughter Card connectors are available only in complete assemblies held together with a stiffener rail; so therefore, insertion tooling is only determined by the total assembly length. The insertion module is 100mm long and can be used alone or stacked in a tool holder for larger connector assemblies.

1. Locate the Daughter Card connector assembly on the printed circuit board.
2. Start the assembly into the board by hand. See Figure 2-8.
3. Locate the printed circuit board with the connector assembly on the customer supplied support pallet.
4. Position the insertion tooling on the connector assembly. See Figure 2-9.
5. Position the p.c. board and support fixture under the press platen.
6. Cycle the press.
7. Remove the loaded support pallet from the press.
8. Remove the insertion tool.
9. Carefully remove the assembled printed circuit board from the support pallet.

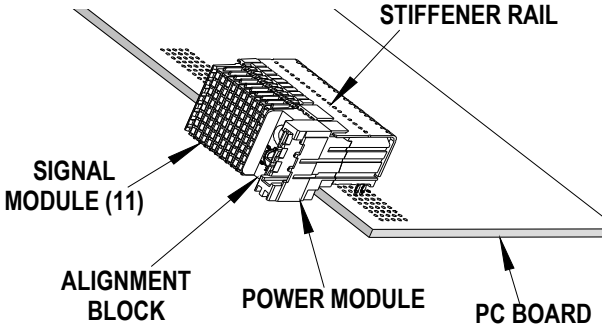


**Figure 2-8**
**TYPICAL DAUGHTERCARD ASSEMBLY ON THE PC BOARD**

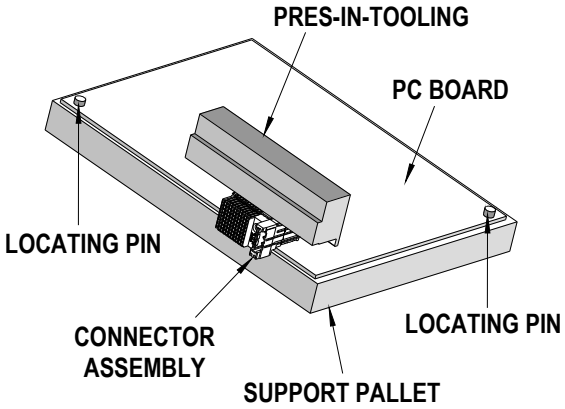


**Figure 2-9**
**PB BOARD, CONNECTOR, AND TOOLING ON SUPPORT PALLET READY FOR PRESS**

# Section 3

# MAINTENANCE

3.1 Cleaning

3.2 Spare Parts

3.3 Perishable Parts

3.4 Preventive Maintenance

3.5 Troubleshooting

## 3.1 Cleaning

Once a day, the support fixture should be cleaned of dust and plating particles and other debris. Compressed air may be necessary to remove debris from the pin clearance holes.

**CAUTION:** Use **extreme caution** when using compressed air for cleaning as it can cause debris to get lodged in the tooling, and fly out at the operator. **USE** of proper safety glasses by the operator and onlookers is required.

**Lubrication**
There is no lubrication required on any of the HSD / VHDM tooling. However, the presses each have their own requirements for lubrication and maintenance. The instruction manual for the specific press being used should be referred to. Molex provides a sheet for logging routine preventive maintenance in this section.

## 3.2 Spare parts

Spare parts are parts that are available to support the HSD / VHDM Tooling in service. They are moving or otherwise functioning parts that could be damaged or malfunction. Molex Application Tooling Group recommends that the customer keep some or all of these parts on hand to reduce down time. These parts are identified in the Parts Lists in Appendices A, B, and C.

## 3.3 Perishable Parts

Perishable parts make contact with the product and can wear over time. The customer is responsible for maintaining these parts and Molex recommends that they keep at least one spare set on hand at all times. These parts are identified in the Parts Lists in Appendices A, B, and C.

## 3.4 Preventive Maintenance

**DAILY: Clean, See Section 3.1.1**
**MONTHLY: Lubricate, See Section 3.1.2**

**CHECK SHEET MONTH_____YEAR_____**

| Week | Daily Use | Days of the Week | | | | | | | Solution |
|---|---|---|---|---|---|---|---|---|---|
| | | MON | TUE | WED | THU | FRI | SAT | SUN | |
| 1 | | | | | | | | | |
| 2 | | | | | | | | | |
| 3 | | | | | | | | | |
| 4 | | | | | | | | | |
| Cleaning | Daily | | | | | | | | |
| Lubricate | Monthly | | | | | | | | |

Chart may be copied for mounting.
Schedules should be adjusted up or down depending on usage. Molex Application Tooling Group recommends that a log of preventive maintenance be kept with the machine.

## 3.5 Troubleshooting

| Symptom | ▪ Cause | Solution |
|---|---|---|
| Connector Being Damaged | ▪ Press stroke set too low. | Refer to the appropriate press manual and adjust the stroke. See Section 2.2. |
| | ▪ Something not properly aligned. | Check fixture and repair as required. |
| | | Check alignment of fixture in press. |
| | | Check to be sure the press platen is pressing squarely on the tooling block. |
| | ▪ "Blades" on tooling bent or damaged. | Replace tool. |

# Section 4

# Available Tools

4.1 Standard Press-In-Tools

Table 4-1 Assembly Tooling for VHDM Signal Headers

Table 4-2 Assembly Tooling for HSD and VHDM Daughter Card Receptacles

Table 4-3 Standard Tool Holder for Back Plane Header Assembly

Table 4-4 Assembly Tooling for 8 Row VHDM Signal Headers

Table 4-5 Old Style Tool Holders for Back Plane Header Assembly

Table 4-6 Field Repair Tooling for HSD and VHDM Headers

Table 4-7 Available Repair Tools

4.2 Standard Tool Ordering Procedure

## 4.1 Standard Press-In-Tools

**Standard Insertion Tools**
All the applicable VHDM and VHDM-HSD connectors and the standard tooling required for each connector are located in these tables.

## Table 4-1

**Assembly Tooling for VHDM Signal Headers** (For use in standard tool holders)
Refer to the individual instruction sheets for more information on Individual tools

| Product Number | Tool Description | Tool Size (Long) | Illustration |
|---|---|---|---|
| VHDM Advanced Mate Signal Header (6 row by 10 wide) (74057, 74058, and 74059 Series) | Insertion Module 62202-0203 | (20mm) (.787") | 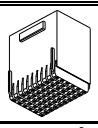 |
| VHDM Advanced Mate Signal Header (6 row by 25 wide) (74057, 74058, and 74059 Series) | Insertion Module 62202-0204 | (50mm) (1.97") | 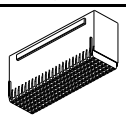 |
| VHDM Advanced Mate Signal Header (8 row by 10 wide) (74060, 74061, and 74062 Series) | Insertion Module 62202-0205 | (20mm) (.787") | 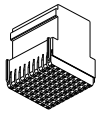 |
| VHDM Advanced Mate Signal Header (8 row by 25 wide) (74060, 74061, and 74062 Series) | Insertion Module 62202-0206 | (50mm) (1.97") | 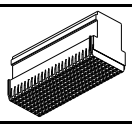 |
| VHDM Advanced Mate Signal Header (6 row by 10 wide) (74057, 74058, 74059, and 74074 Series) (76761, 76762, and 76763 Series) | Insertion Module 62202-0207 | (20mm) (.787") | 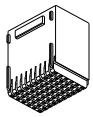 |
| VHDM Standard Shield Signal Header (6 row by11 wide) (74057, 74058, and 74059 Series) | Insertion Module 62201-1101 | (20mm) (.787") | 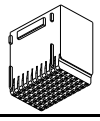 |
| VHDM Standard Shield Signal Header (6 row by13 wide) 74057, 74058, and 74059 Series) | Insertion Module 62201-0905 | (26mm) (1.02") | 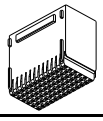 |
| VHDM Standard Shield Signal Header (6 row by 14 wide) (74057, 74058, and 74059 Series) | Insertion Module 62201-0904 | (28mm) (1.10") | 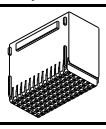 |
| VHDM Standard Shield Signal Header (6 row by 25 wide) (74057, 74058, 74059, and 74074 Series) (76761, 76762, and 76763) | Insertion Module 62202-0208 | (50mm) (1.97") | |
| VHDM Standard Shield Signal Header (8 row by 10 wide) (74060, 74061, 74062, and 74075 Series) (76134, 76135, and 76136 Series) | Insertion Module 62202-0209 | (20mm) (.787") | 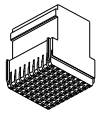 |

| Product Number | Tool Description | Tool Size (Long) | Illustration |
|---|---|---|---|
| VHDM Standard Shield Signal Header (8 row by 25 wide) (74060, 74061, 74062, and 74075 Series) (76134, 76135, and 76136 Series) | Insertion Module 62202-0210 | 8 by 25 (50mm) (1.97”) | 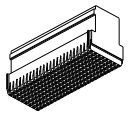 |
| VHDM Power module 74029-6000 (6 row) 74029-8000 (8 row) | Insertion Module 62202-0211 | 5.4mm (.212”) | 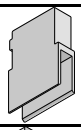 |
| VHDM and VHDM-HSD Signal Headers all sizes with guide pins | Alignment Block 62202-0212 | 7.0mm (.276”) | 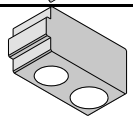 |
| VHDM-HSD Signal Header (5 row by 10 wide) (74695, 74696, 74697,74701 and 74702 Series) | Insertion Module 62202-0201 | (20mm) (.787”) | 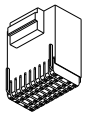 |
| VHDM-HSD Signal Header (5 row by 25 wide) (74695, 74696, 74697and 74702 Series) | Insertion Module 62202-0202 | (50mm) (1.97”) | 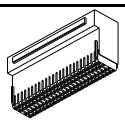 |
| VHDM-HSD Signal Header (6 row 10 wide) (74979, 74980, and 74981 Series) | Insertion Module 62202-0216 | (20mm) (.787”) | 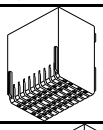 |
| VHDM-HSD Signal Header (6 row by 25 wide) (74679, 74680, and 74681Series) | Insertion Module 62202-0217 | (50mm) (1.97”) | 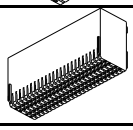 |
| VHDM-HSD Signal Header (8 row 10 wide) (74649, 74650, and 74651 Series) | Insertion Module 62202-0205 | 8 by 10 (20mm) (.787”) | 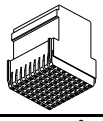 |
| VHDM-HSD Signal Header (8 row by 25 wide) (74649, 74650, and 74651 Series) | Insertion Module 62202-0206 | 8 by 25 (50mm) (1.97”) | 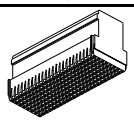 |

## Table 4-2

**Assembly Tooling for HSD and VHDM (Daughter Card Receptacles)**

| Product Number | Tool Description | Tool Size (Long) | Illustration |
|---|---|---|---|
| VHDM-HSD 5-row Assembly (74670 Series) VHDM 6-row Assembly (74030 Series) VHDM-H 6-row Assembly (76760 Series) | Insertion Module 62202-0213 | 100mm (3.94”) | 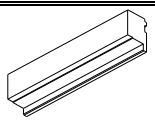 |
| VHDM 6-row Assembly (Right Angle Male) (74600 Series) | Insertion Module 62202-0215 | 100mm (3.94”) | 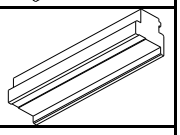 |
| VHDM 8 row Assembly (74040, 74680, 74686, and 76021 Series) GbX 4-Pair (75220, 75420, 75426, 75878 Series) HSD 8-row Assembly (74680 Series) Hybrid 8-row Assembly (74686 Series) | Insertion Module 62202-0214 | 100mm (3.94”) | 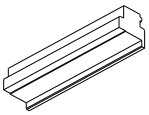 |

## Table 4-3

**Standard Tool Holder for Back Plane Header Assembly**

| Module Number | Tool Description | Tool Length | Illustration |
|---|---|---|---|
| VHDM and HSD Insertion modules: 62202-0201 to 62201-0214 and Old style VHDM 6 row Insertion modules: 62201-0901, 62201-1001, 62201-1101, and 62201-1601 | Tool Holder for Backplane Assembly. Tooling 62201-9501 | 24mm (0.94”) | 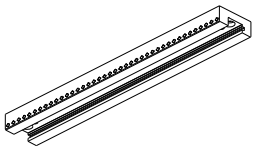 |
| | Tool Holder for Backplane Assembly. Tooling 62201-9502 | 72mm (2.83”) | |
| | Tool Holder for Backplane Assembly. Tooling 62201-9503 | 156mm (6.14”) | |
| | Tool holder for Backplane Assembly. Tooling 62201-9504 | 216mm (8.50”) | |
| | Tool holder for Backplane Assembly. Tooling 62201-9509 | 254mm (10.00”) | |
| | Tool Holder for Backplane Assembly. Tooling 62201-9511 | 304.8mm (12.00”) | |
| | Tool holder for Backplane Assembly. Tooling 62201-9512 | 406.4mm (16.00”) | |

## Table 4-4

**Assembly Tooling for 8 Row VHDM Signal Headers** (For use in standard tool holders)

| Product Number | Tool Description | Tool Length | Illustration |
|---|---|---|---|
| VHDM Std. Shield Signal Header (8 row by 10 wide) (74060, 74061, and 74062 Series) | Old style Insertion Module 62201-1301 OBSOLETE | 8 by 10 (20mm) | |
| VHDM Std. Shield Signal Header (8 row by 25 wide) (74060, 74061, and 74062 Series) | Old style Insertion Module 62201-1201 OBSOLETE | 8 by 25 (50mm) | 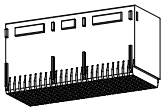 |
| VHDM 8 row Power module 74029-8000 | Old style Insertion Module 62201-1401 OBSOLETE | 5.4mm | 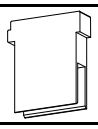 |
| VHDM 8 row Std. Shield Signal headers with guide pins | Alignment Block for old style 8 row holder 62201-1302 OBSOLETE | 7mm | 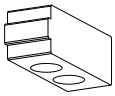 |

## Table 4-5
**Old Style Tool Holders for Back Plane Header Assembly**

| Module Number | Tool Description | Tool Length | Illustration |
|---|---|---|---|
| Old style VHDM 8 row Insertion modules: 62201-1201, 62201-1301, and 62201-1401 | 8 Row Tool Holder for Backplane Assembly. Tooling 62201-1200 OBSOLETE | 65mm (2.56”) | 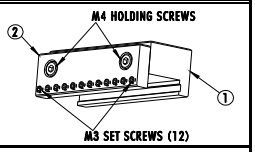  |
| | 8 Row Tool Holder for Backplane Assembly. Tooling 62201-1300 | 36mm (1.42”) | 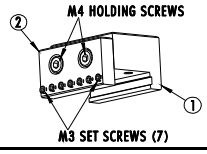  |
| NOTE: Use with 8 row alignment block 62201-1302 when signal headers with guide pins are used | 8 row Tool Holder for Backplane Assembly. Tooling 62201-1800 | 115mm (4.53”) | 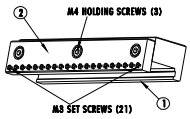  |

## Table 4-6
**Field Repair Tooling for VHDM and HSD Headers**

This table lists the special tools designed for use in repairing damaged VHDM and HSD connectors that are mounted on a printed circuit board.

| Product Number | Tool Description | Illustration |
|---|---|---|
| VHDM Power Module Insulator 6-row by 2 circuit (74029 Series) | 6 row Power Insulation Inserter Repair Tool 62100-3500 | 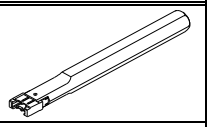 |
| VHDM Power Module Insulator 8 row by 3 circuit (74029 Series) | 8 row Power Insulation Inserter Repair Tool 62100-3600 | 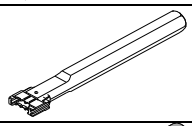 |
| VHDM and HSD Signal pins (All sizes) | Single Pin Inserter Repair Tool 62201-5700 | 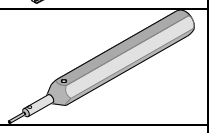 |
| VHDM Headers: 6-row (74057, 74058, and 74059 Series) VHDM-H 6-row (76761, 76762, and 76763 Series) | 6-row Pin and Shield Repair Tool 62201-5800 | 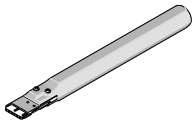 |
| HSD Headers: 5 row (74695, 74696, and 74697 Series) | 5 row Pin and Shield Repair Tool 62201-5810 | 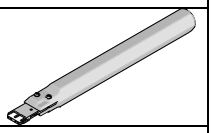 |
| VHDM Headers: 8 row (74060, 74061, and 74062 Series) HSD Headers: 8 row (74649, 74650, and 74651 Series) VHDM-H (76134, 76135, and 76136) | 8 row Pin and Shield Repair Tool 62201-5900 | 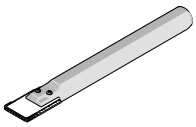 |

| Product Number | Tool Description | Illustration |
|---|---|---|
| VHDM Headers: 6 row<br>(74057, 74058, and 74059 Series)<br>VHDM-H 6-row<br>(76761, 76762, and 76763 Series) | 6 row Shield<br>Extraction Tool<br>62201-6000 | 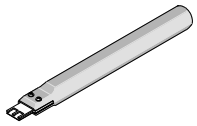 |
| HSD Headers: 5 row<br>(74695, 74696,<br>and 74697 Series) | 5 row Shield<br>Extraction Tool<br>62201-6010 | 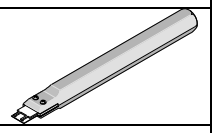 |
| VHDM Headers: 8 row<br>(74060, 74061, and 74062 Series)<br>HSD Headers: 8 row<br>(74649, 74650, and 74651 Series)<br>VHDM-H (76134, 76135, and 76136) | 8 row Shield<br>Extraction Tool<br>62201-6100 | 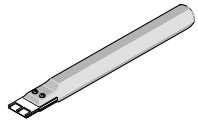 |
| Daughter Card Receptacle<br>VHDM 6-row Assembly (74030 and 76760 Series)<br>VHDM 8-row Assembly (74040 and 76021 Series)<br>HSD 8-row Assembly (74680 Series) | 6 and 8 row<br>Stiffener Removal tool<br>62201-6200 | 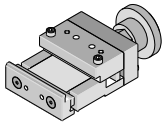 |
| Daughter Card Assembly<br>HSD 5 row Assembly<br>(74670 Series) | 5 row<br>Stiffener Removal tool<br>62201-6215 | 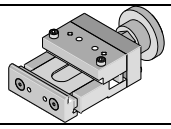 |
| Daughter Card Assembly<br>VHDM and HSD<br>(74030, 74040, 74670,<br>and 74680 Series) | Press Block<br>Removal tool<br>62201-6250 | 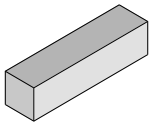 |
| Ram Assembly<br>(74600 and 75286 Series) | Stiffener Removal tool<br>62202-1000 | 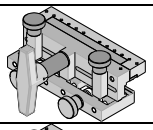 |
| VHDM Right Angle Male<br>8 Row Ram<br>(75165 and 75346 series) | Stiffener Removal Tool<br>62202-1700 | 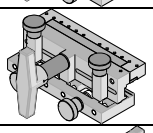 |
| VHDM<br>Right Angle Male Header<br>(74600 Series) | Single Wafer Removal Tool<br>62202-1050 | 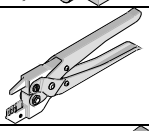 |
| VHDM Right Angle Male Header<br>(74600 Series) | Single Wafer Insertion Tool<br>62202-1060 | 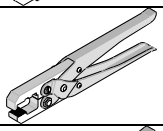 |
| VHDM 8 Row Stacker Assembly<br>(75118 Series) | Single Wafer Removal Tool<br>62202-1450 | 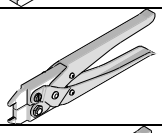 |
| VHDM Right Angle Male Header<br>(74030, 74040, 74670,<br>and 74680 Series) | Single Wafer Removal Tool<br>62100-4300 | 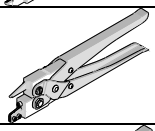 |
| VHDM and HSD<br>(74039 Series) | Joiner / Ground Insertion Tool<br>62100-3800 | 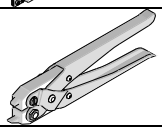 |

| Product Number | Tool Description | Illustration |
|---|---|---|
| VHDM and HSD (73892 Series) | Latch Insertion Tools 62100-3915, 62100-3925 and 62100-3935 | 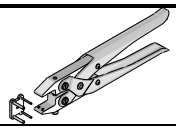 |

## 4.2 Standard Tool Ordering Procedure

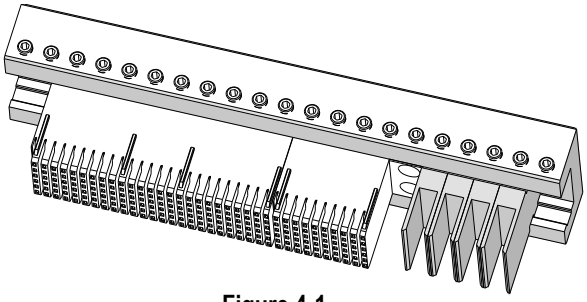

**Figure 4-1**
**TYPICAL TOOLING COMBINATION**

### Stacking Tooling

All the insertion tooling listed in Table 4-1 and 4-2 can be stacked in any combination to be able to simultaneously press in any arrangement of stacked connectors. Tooling holders are available in various lengths. Figure 4-1 shows a typical setup for a 6 by 25 signal module, a 6 by10 signal module, and four (4) 6-row power modules.

### Ordering Tooling for Connectors

In order to insert a typical row of connectors, it is necessary to select the individual insertion tools and then pick the appropriate tooling holder, (See also examples 1 and 2).

### Basic Procedure

1 Determine the combination of signal modules and power modules to be inserted.
2 Select the proper insertion modules from Table 4-1and Table 4-2. Remember to include the appropriate alignment block(s).
3 Table 4-1 and Table 4-2 shows the tool sizes. (Long) Write down the length of each tool selected.
**NOTE:** Make sure that if you require four of a particular tool, write down its length 4 times.
4 Total up these lengths.
5 Using the length just calculated, select the next largest tooling holder from Table 4-3. The tooling holder can be shorter than the total tooling but not by more than 0.5 mm per side.
6 All of the tools selected above must be ordered separately.

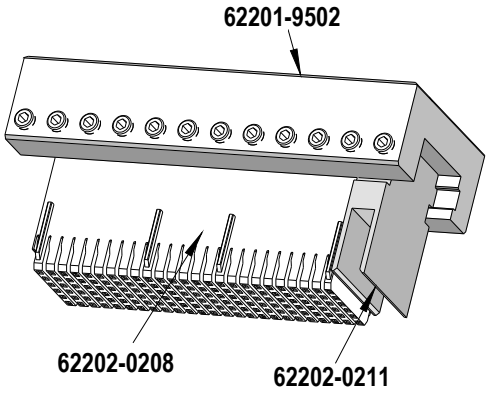


**Figure 4-2**
**Example 1 TOOL ASSEMBLY**

**Example 1**

To be inserted: (1) 74059-2501 (6 by 25) Backplane Signal Module and (1) 74029-XXXX Power Module.

1. Look at Table 4-1 and find the required tools. In this case it would be a 62202-0208 and a 62202-0211.
2. From Table 4-1 get the lengths of these tools (numbers may be rounded up); 62202-0208 =50.0mm and 62202-0211 = 5.4mm.
3. Add these two values for a total of 55.4mm.
4. From the Tooling Holder list in Table 4-3, pick the 72mm long holder, 62201-9502.
5. Thus the order to Molex should include the following:

| Quantity | Order No. | Description |
|---|---|---|
| 1 | 62202-0208 | 6 by 25 Header Insertion Module |
| 1 | 62202-0211 | Power Connector Insertion Module |
| 1 | 62201-9502 | 72mm Long Tooling Holder |

(Figure 4-2 shows the assembled unit.)

**Example 2**

The following combination is to be inserted:
(1) 74058-2501 6 by 25 Signal Module with locating pins on the left;
(1) 74059-1001 6 by 10 Signal Module with locating pins on the right;
(4) 74029-6000 6 row power modules.

1. From the tooling list in Table 4-1 pick a 62202-0208 for the first module.
2. A 62202-0207 will be needed for the second module.
3. Pick one (1) 62202-0212, to act as a spacer to accommodate the locating pin on the 62202-0207.
4. Now pick four (4) 62202-0211-power module tools.
5. Get the length information from Table 4-1 (some rounded up a little).
6. Total up the lengths;

| | |
|---|---|
| 62202-0208 | 50.0mm |
| 62202-0207 | 20.0mm |
| 62202-0212 | 7.0mm |
| 62202-0211 | 5.4mm |
| 62202-0211 | 5.4mm |
| 62202-0211 | 5.4mm |
| 62202-0211 | 5.4mm |
| Total = | 98.6mm |

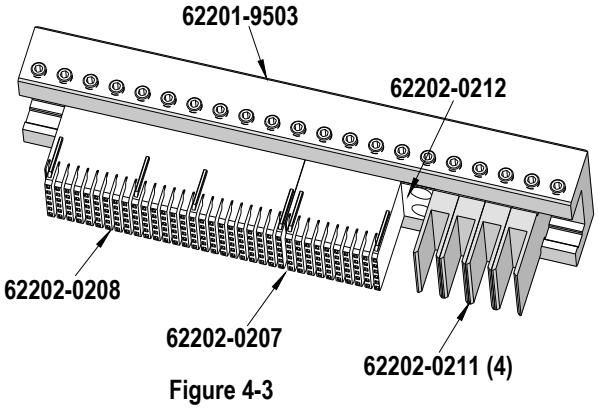


**Figure 4-3**
**Example 2 TOOL ASSEMBLY**

1. Using this total length, pick the 62201-9503 Tooling Holder (Table 4-3) as this is 156mm long.
2. Therefore the purchase order should contain the following:

| Quantity | Order No. | Description |
|---|---|---|
| 1 | 62202-0212 | Alignment Block |
| 1 | 62202-0208 | 6 by 25 Header Insertion Module |
| 1 | 62202-0207 | 6 by 10 Header Insertion Module |
| 4 | 62202-0211 | Power Module Inserter |
| 1 | 62201-9503 | 6 Row, 156mm Long Tooling Holder |

(Figure 4-3 shows the assembled insertion tooling.)

**Ordering Daughter Card Tooling**

Daughter Card connectors only come in custom assemblies that are loaded in a stiffener rail. The daughter card insertion modules are 100 mm long. Therefore, insertion tools can be used individually for connector assemblies that are shorter than 100mm. or stacked in a tool holder for connector assemblies that are longer.

**Basic Procedure**

1. Determine the combination of signal wafers, power modules, and guidance modules to be inserted.
2. Determine the total length of the stack of components.
3. Using that length, select the daughter card insertion tools required to cover the whole connector assembly. If more than one 100mm module is use d, a tool holder of appropriate length will be needed. This can be selected from Table 4-1.

**Example 3**

Sixty (60) 74041-0001 8-row daughter card signal wafers, two (2) 74026-8321 8-row power modules and two (2) 74037-0001 8-row guidance modules are to be stacked on a stiffener and inserted.

1. From Table 4-6, it is determined that the signal wafers are 2 mm long, the power modules are 6 mm long and the guidance modules are 8 mm long.
2. Add these up to get the total length:

| | | |
|---|---|---|
| 74041-0001 2mm by 60 | = | 120mm |
| 74026-8321 | | 6mm |
| 74026-8321 | | 6mm |
| 74037-0018 | | 8mm |
| 74037-0018 | | 8mm |
| Total | | 148mm |

3. Using length 148mm, select the following tooling from Table 4-1:

| Quantity | Order No. | Description |
|---|---|---|
| 2 | 62202-0214 | 100mm long 8-row daughter card tool alignment block |
| 1 | 62201-9504 | 216mm long tool holder |

# Section 5

## Glossary of Terms

| | |
|---|---|
| **Backup Pallet** | A simple fixture used to locate and support a printed circuit while a compliant pin connector is being pressed into the pc board. Considerable force is required to press one of these connectors into a pc board, thus the pc board must be adequately supported to avoid being damaged. It must have adequate clearance for the terminals when they protrude through the pc board. |
| **Compliant Pin Connector** | A connector which has terminals that are designed to give slightly when pressed into a hole in a pc board so that the terminal (pin) makes solid electrical contact with the printed circuit board, alleviating the need for soldering. |
| **Flat Platen Press** | A press in which the upper tooling or die set is not attached to the press ram. The ram has a simple flat plate (or platen) attached to it. For this application, the upper tooling is positioned in the connector(s). The press ram comes down on top this tooling and presses on it. When the press ram goes back up, the upper tooling stays with the connector. |
| **HSD** | High speed differential |
| **VHDM** | Very High Density Metric connector system: A 2mm pitch module-to backplane connector system designed for applications requiring high interconnect density and high-speed signal integrity. |
| **PC Board** | Abbreviation for printed circuit board |
| **Support Pallet** | Same as backup pallet |
| **Upper Tooling** | The tooling that goes on top of the connector. It contains the mounting block and dies (or tools) necessary to properly apply pressure where required to push the connector terminals and locking posts into the holes in the printed circuit board. |

**Americas Headquarters**
Lisle, Illinois 60532 U.S.A.
1-800-78MOLEX
amerinfo@molex.com

**Far East North Headquarters**
Yamato, Kanagawa, Japan
81-462-65-2324
feninfo@molex.com

**Far East South Headquarters**
Jurong, Singapore
65-6-268-6868
fesinfo@molex.com

**European Headquarters**
Munich, Germany
49-89-413092-0
eurinfo@molex.com

**Corporate Headquarters**
2222 Wellington Ct.
Lisle, IL 60532 U.S.A.
630-969-4550
Fax: 630-969-1352

**Visit our Web site at http://www.molex.com**