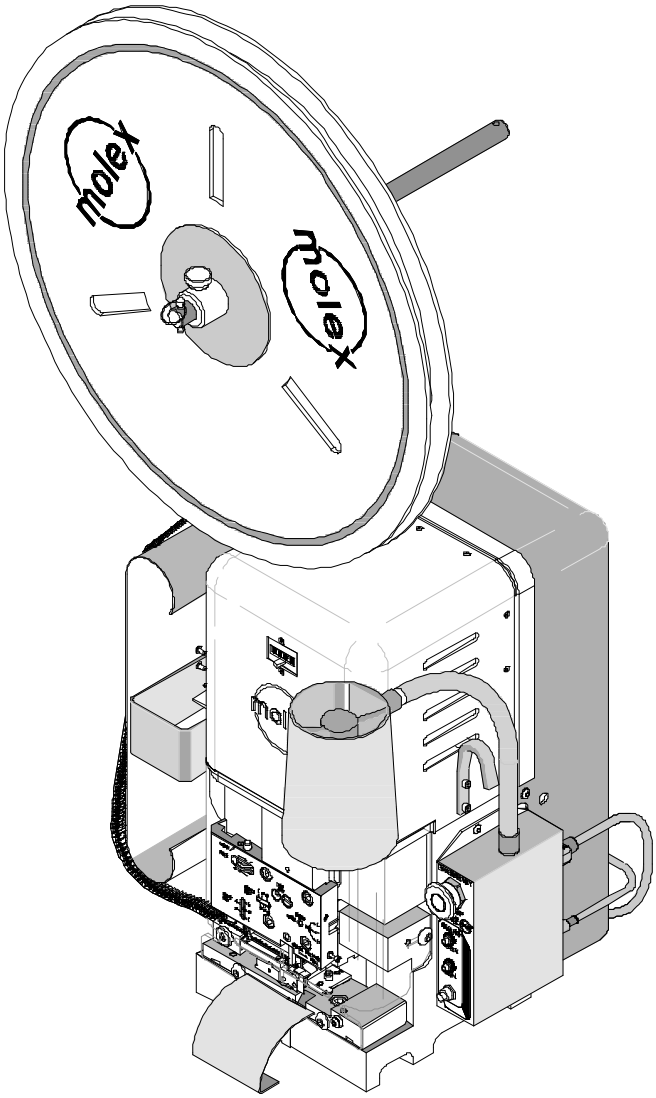

Tm42 Termination Press
Use with Molex T2, and all Terminator Dies
Operation Manual
Order No.69002-5099

- Description
- Operation
- Maintenance

Safety Warnings and Information

	Read and **understand** all of the instructions and safety information in this manual before operating or servicing this tool. Keep this manual available when using this tool. Replacement manuals are available for download at no charge at www.molex.com.

SAFETY ALERT SYMBOL	
This symbol is used to call your attention to hazards or unsafe practices which could result in an injury or property damage. The signal word, defined below, indicates the severity of the hazard. The message after the signal word provides information for preventing or avoiding the hazard.	
DANGER	**DANGER:** Indicates an imminently hazardous situation which, if not avoided, could result in death or serious injury.
WARNING	**WARNING:** Indicates a potentially hazardous situation which, if not avoided, could result in death or serious injury.
CAUTION	**CAUTION:** Indicates a potentially hazardous situation which, if not avoided, may result in minor or moderate injury. **CAUTION** may also be used to alert against unsafe practices associated with events that could lead to personal injury.

	WARNING **Always** wear proper eye protection when Operating or servicing this equipment. Failure to wear eye protection could result in serious eye injury from flying debris.		**WARNING** **Heavy Object** To avoid muscle strain or back injury, use lifting aids and proper lifting techniques when removing or replacing. Failure to observe these precautions may result in injury or property damage.
	WARNING **Never** wear clothing or jewelery that is loose or That could potentially hang into the equipement and get caught. Failure to observe this warning could result in Severe Injury or death.		**WARNING** **Never** install or service this machine while connected to any electrical power source. Disconnect power by unplugging the press from its power source. Failure to observe this warning could result In severe injury or death.
	WARNING **Never** operate, service, install, or adjust this machine without proper instruction and without first reading and understanding the instructions in this manual and all applicable press and/or wire processing machine. manuals.		**WARNING** **Always** hand cycle the applicator in the equipment to ensure the tooling is properly aligned. Failure to observe these precautions may result in Injury or property damage.

WARNING

Never use this press or wire processing machine without guards or safety devices that are intended to prevent hands from remaining in the die space.

Failure to observe this warning could result in Severe injury or death.

WARNING

Do not use compressed air to clean this equipment.
The forces created by compressed air can force debris into the tool.

Failure to observe these precautions may result in injury or property damage.

WARNING

Always wear proper ear protection when Operating or servicing this applicator.

CAUTION

NEVER install or remove terminator dies with the flywheel in motion or the motor running.
Never install or remove terminator dies or service this machine without manually cycling the press to verify that the clutch control collar is in the locked position (past top dead center) block the press ram in the full up position if a defective clutch is suspected.
Caution the TM42 press is shipped from the factory for operation with US standard tooling. When using European Standard tooling, the spacer shim (69002-5560) supplied with the unit must be added between the bolster plate and the press frame
Failure to remove this shim before installing US standard tooling may result in severe damage to the tooling and/or press.

CAUTION

Never perform any service or maintenance other than as described in this manual.
Never modify, alter or misuse the equipment
Molex crimp specifications are valid only when used with Molex terminals, applicators and tooling.
Failure to observe this precaution may result in injury and property damage.

Tooling Technical Assistance

Molex offers tooling technical assistance for customers who may need some guidance for tooling adjustments. This support can be obtained by calling either of the two numbers listed below and asking for the Molex Tooling Group.
Call Toll Free 1-800-786-6539 (US) 1-630-969-4550 (Global).

This assistance is limited to the operation and set-up of a customer's Molex Press. Questions with regard to Molex connector products or how to identify the proper tooling and/ or tooling documentation should be directed to your local Molex personnel or Customer Service Representative.

When calling for service on the press a copy of the *Tooling Manual* and Specific *Applicator Tooling Specification Sheet* should be present and a person that is familiar with the applicator should be present. Be sure the following information is supplied:

1. Customer name
2. Customer address
3. Person to contact such as (name, title, e-mail, and telephone number
4. Applicator order number (Lease number also if applicable)
5. Serial number (Lease number also if applicable)
6. Molex Connector product order number
7. Urgency of request
8. Nature of problem

Molex Application Tooling Group
2200 Wellington Court
Lisle, IL 60532, USA
Tel: +1 (630) 969-4550
Fax:+1 (630) 505-0049

Visit our Web site at http://www.molex.com

Table of Contents

Contents

Tm42 Termination Press 1
Order No.69002-5099 1
Safety Warnings and Information 2
Table of Contents 4
Section 1 6
General Description 6
1.1 Description 7
1.2 Features 7
1.3 Technical Specifications 7
1.4 Delivery Check 7
1.5 Tools 8
Section 2 9
Installation 9
2.1 Lifting/Mounting 10
2.2 Reel Support Assembly 11
2.3 Foot Pedal and Power Connection 11
2.4 Hand Rest 11
2.5 Safety and Work Area Check 11
2.6 Bolster Shim Installation and Removal 12
Section 3 14
Setup and Operation 14
3.1 Termination Die Set Installation and Removal 15
3.2 Loading the Terminal Strip 16
3.3 Punch and Anvil Alignment 18
3.4 Feed Finger Adjustment 18
3.5 Forward Feed Adjustment 18
3.6 Back Stroke Feed Adjustment 19
3.7 Manually Cycling the Press 19
3.8 Conductor Crimp Punch Adjustment 20
3.9 Insulation Crimp Punch Adjustment 20
3.10 Operation 21
Section 4 22
Maintenance and Clutch Unit Service 22
4.1 Cleaning 23
4.2 Lubrication 23
4.3 Perishable Orders 24
4.4 Spare Orders 24
4.5 Clutch Unit Service Adjust/Repair 24
4.6 Oiler 27
Section 5 29
5.1 Parts List 30
5.2 Assembly Drawings 33
5.3 Electrcal Parts List 37
5.3 Electrcal Schematic 38
5.4 Troubleshooting 39
Appendix A 41
A.1 Conductor Brush and Terminal Position 42

A.2 Conductor Bell Mouth and Terminal Cutoff Tab....43
A.3 Crimp Height Measurement....44
A.4 Insulation Crimp....44
A.5 Pull Force Testing....46
Appendix B....48
EC Declaration of Conformity....49

Section 1

General Description

1.1 Description

1.2 Features

1.3 Technical Specifications

1.4 Delivery Check

1.5 Tools

General Description

1.1 Description

The 69002-5000 (240V AC Version) and the 69002-5001(120V AC Version) TM42 Termination Machine is an electrically operated, single-cycle, flywheel press. It is designed to provide an effective method of terminating a wide range of Molex side-feed crimp terminals to pre-stripped discrete wire and cable.

Production flexibility is obtained through the use of interchangeable modular terminator dies. These dies are inexpensive because, unlike a modular applicator, all crimp height and terminal feed adjustments are located in the press. The TM42 is ideally suited for mid-volume, semi-automatic operation.

The TM42 will complete one crimping cycle with each depression of the foot pedal. Safe operation is provided by an interlock switch that renders the press inoperative if the safety guard is removed.

1.2 Features

- Utilizes Molex TM40, TM42, T2, and FFC Terminator Dies.
- Independent conductor and insulation adjustments with position reference indicators.
- Bench-mounted unit requires electrical power only. Meets OSHA safety and noise standards. European CE rated.
- Quick-release tooling for fast and simple changeover. Ability to remove upper crimp tooling without removing lower die.
- Ideal for mid-volume and semi-automatic applications.
- 38.1 mm Stroke, No ram adjustment required.
- Meets ISO Standards.
- Flexible external work light.
- Universal feed adjustment to accept Molex side-feed terminals.
- Totally enclosed for operator safety, including a power interlock switch for the front guard with “GUARD OPEN” indicator light.
- Resettable counter for accurate batch-counting.
- Modular solid-state controls. Power cord and foot pedal plug in easily.

1.3 Technical Specifications

Dimensions with reel mounted
Width: 540.00mm (21.30”)
Depth: 330.00mm (13.00”)
Height: 1,150.00mm (45.00”)

(Without reel mounted)

Width: 330.00mm (13.00”)
Depth: 330.00mm (13.00”)
Height: 914.00mm (36.00”)

Weight
100kg (220 lbs.) Unpacked
110kg (242 lbs.) Gross

Power Requirements
69002-5001 120V AC, 1Ph, 60 Hz, 5.8/2.9 Amp
Note: Press shipped setup for 120V service.

69002-5000 240V AC, 1Ph, 50 Hz, 3.8 Amp
European CE Rated.

Production Rate
Depending on the operator skill and the wire length, 2500 terminations per hour maximum. Flywheel rotation: 210 RPM.

Processing Capability
Up to 4.0mm² of copper conductor in solid or stranded wire.

Sound Level
Operator will be exposed to less than 85 DB.

1.4 Delivery Check

After removing the packaging band, the top and sides of the box should lift off easily. Make sure the following items are included in this package.

Description	Qty
Main press body	1
Reel support assembly	1

Two cartons are included that contain the following;

Carton 1

69002-5715 Foot switch assembly	1

Carton 2

Power cord	1
69018-6237 (for 69002-5001)	
OR	
62500-0113 (for 69002-5000)	
69002-5547 Hand rest	1
TM-690025099 TM42 Operation Manual	1
69002-5560 Shim	1
69001-0106 Feed finger crank	1
69018-8235 10mm hex wrench	1

* For International applications, the power cord/plug may need to be replaced or adapted with the appropriate connection.

1.5 Tools

The following tools may be needed for setup and adjustment of the TM42 press and terminator die.

- Metric hex wrench set
- English hex wrench set (for older terminator die set designs)
- Large and small standard screwdriver
- Adjustable wrench
- Needle nose pliers
- Crimp micrometer
- Eye loupe (10x)
- Wire stripper/cuter

Section 2

Installation

2.1 Lifting/Mounting

2.2 Reel Support

2.3 Foot Pedal and Power Connection

2.4 Hand Rest

2.5 Safety and Work Area Check

2.6 Bolster Shim Installation and Removal

CAUTION: To avoid serious injury support the ram in the upper position with a hardwood wedge (approximately 1 7/8" high).

When changing tooling or working on the clutch, a block should be inserted under the ram (See Illustration). This also pertains when the guards are taken off. The block supports the ram and the tooling, if block is not inserted the Ram can fall suddenly and cause serious injury.
When procedure is complete be sure to remove the block prior to cycling the Press.

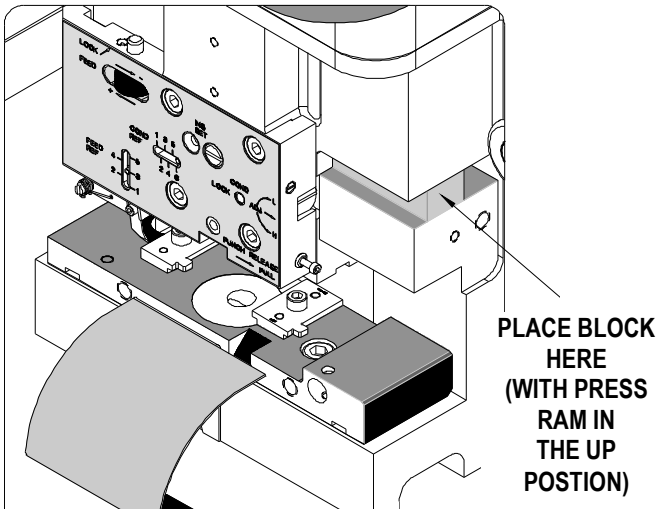

2.1 Lifting/Mounting

WARNING: The TM42 press weighs over 100 kg. (220 lbs.) and is NOT intended to be lifted by an individual. The guarding is not attached to provide support for lifting purposes. Mechanical lifting devices should be used. A person lifting the press can sustain severe back or other injuries.

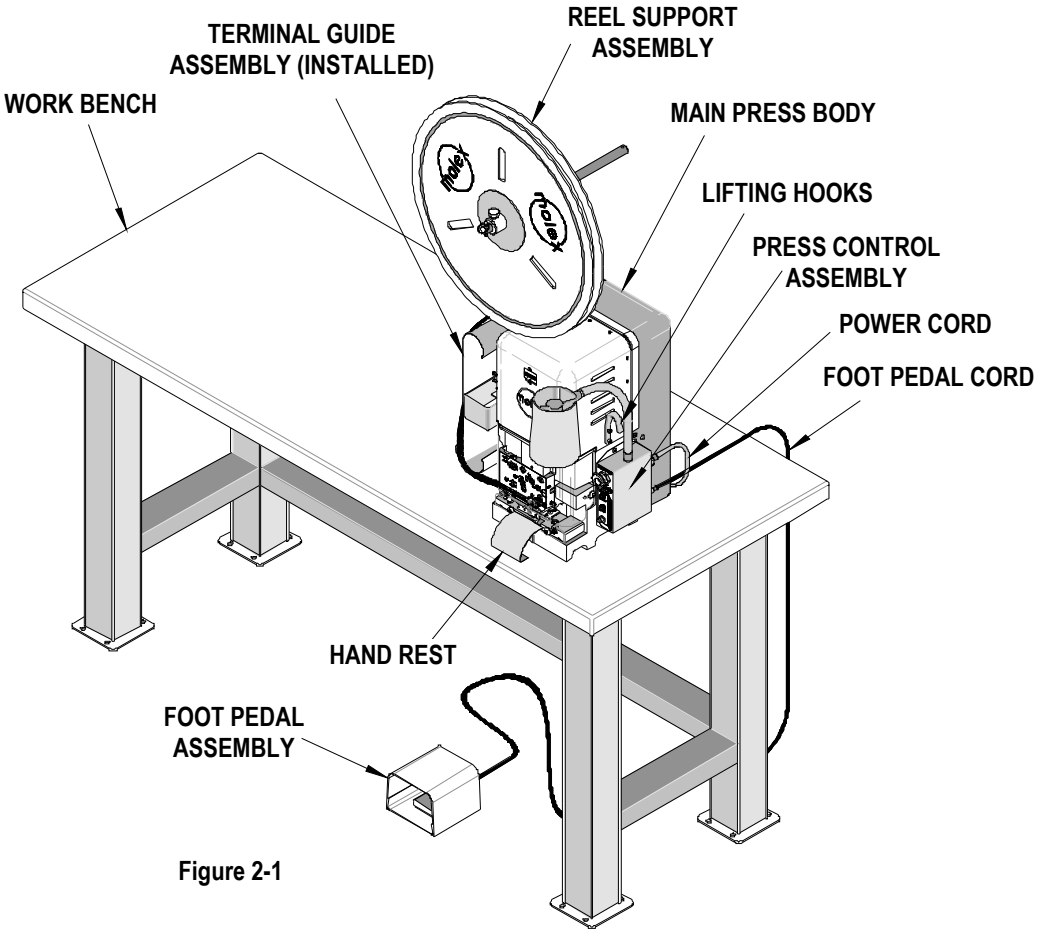

Figure 2-1

Lifting hooks are provided on each side of the press. See Figure 2-1. A heavy-duty chain, rope, cable, or belt can be used with loops, links, or rings on each end that can securely attach to the lifting hooks. An electric, hydraulic, or mechanical crane should be used to lift the press. Lift the press up approximately 12.0mm (0.50") and verify that the press is well balanced. Upon verification, the press can be lifted onto a sturdy workbench. Access to the back of the machine is required for manual cycling. A minimum 25.00mm (1.00") thick wooden bench top will offer quiet vibration-

free operation. TM42 should be attached to the table with (2) 12.0mm bolts and washers. For marking the tabletop (See Figure 2-2), or use the removable template at the back of the manual. Drill the clearance holes for the 12.0mm bolts and secure the press to the table. Bolts are not supplied by Molex.

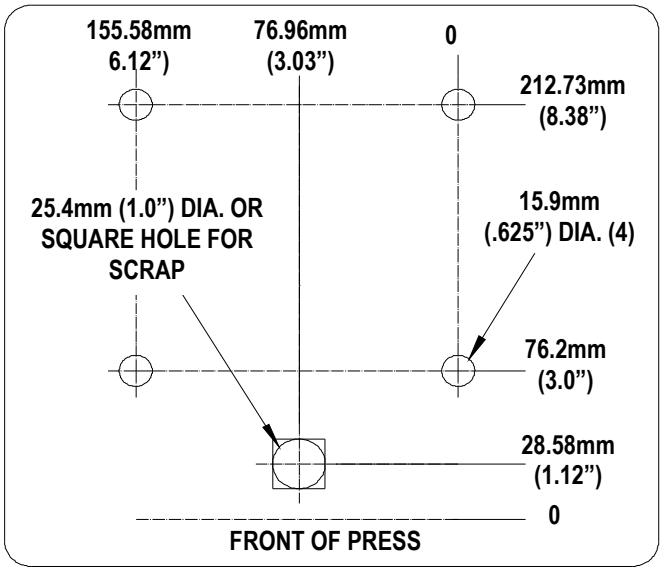

Figure 2–2
Table Top Mounting Pattern

2.2 Reel Support Assembly

Install the reel support assembly by inserting the support tube in the hole located on the left side of the top cover.

2.3 Foot Pedal and Power Connection

1. Connect the 4-pin plug for the foot pedal in the rear of the press control assembly.
2. Turn the Locking Ring clockwise until tight.
3. Connect the power cord plug to the socket in the back of the control assembly. Use a grounded electrical outlet as the power source.
4. Two fuses are located in the fuse drawer directly above the power socket. To replace the fuses, use a small screwdriver to open the fuse drawer, remove damaged fuses and replace.

2.4 Hand Rest

Attach the hand rest with one M6 x 10.0mm BHCS located at the front center of the press. See Figure 2-1.

2.5 Safety and Work Area Check

1. Check that the work area is well lighted. Adjust the work light for best visibility.
2. Check that the work area is clean and free of debris.
3. Check that no tools have been left in the machine or work area.

Never operate in areas of excess moisture or water. Check that all safety guards are in place. **NEVER** operate this press without press guards in place. The guard indicator light is located on the front of the press control assembly. See Figure 2-3.

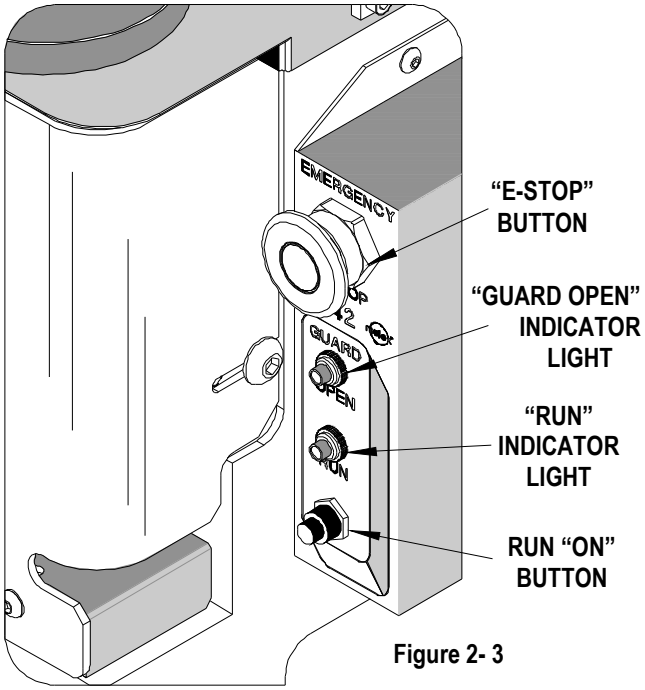

Figure 2- 3

4. Check that the crimping position is ergonomic for the operator's size. A bench height of 762.00 to 813.00mm (30.00 to 32.00") will provide operator comfort, and allows both feet to rest on the floor. The foot pedal should be placed in a comfortable position.
5. Check that the press position is located approximately 150.00mm (6 .00") from the edge of the bench. A chair or stool with adjustable height and backrest should be provided for maximum comfort and back support for the operator. Observe where the emergency stop button is on the control panel. See Figure 2-3.

CAUTION: Molex recommends that the operator and observers wear eye protection when the press is in operation or being serviced.

2.6 Bolster Shim Installation and Removal

CAUTION: Before installing any tooling in this press, determine the presence or absence of the .50mm (.020”) shim. This shim is in addition to the .25 mm (.010”) that should always be present. The TM42 is shipped from the factory for operation with U.S. designed terminator dies (order numbers 11-40-2XXX, 6384X-XXXX, or 6385X-XXXX.

When using European designed tooling (order number 69001-XXXX), an additional .50mm (.020”) Shim (P.N. 69002-5560), supplied with the unit must be added between the bolster plate and the press frame to set the shut height. Do not remove the .25.00mm (.010”) shim.

WARNING: Failure to install the shim 69002-5560 for European tooling may result in a nonfunctional terminator die set. Failure to remove the .50mm (.020”) shim before installing U.S. terminator dies may result in damage to the tooling and/or press.

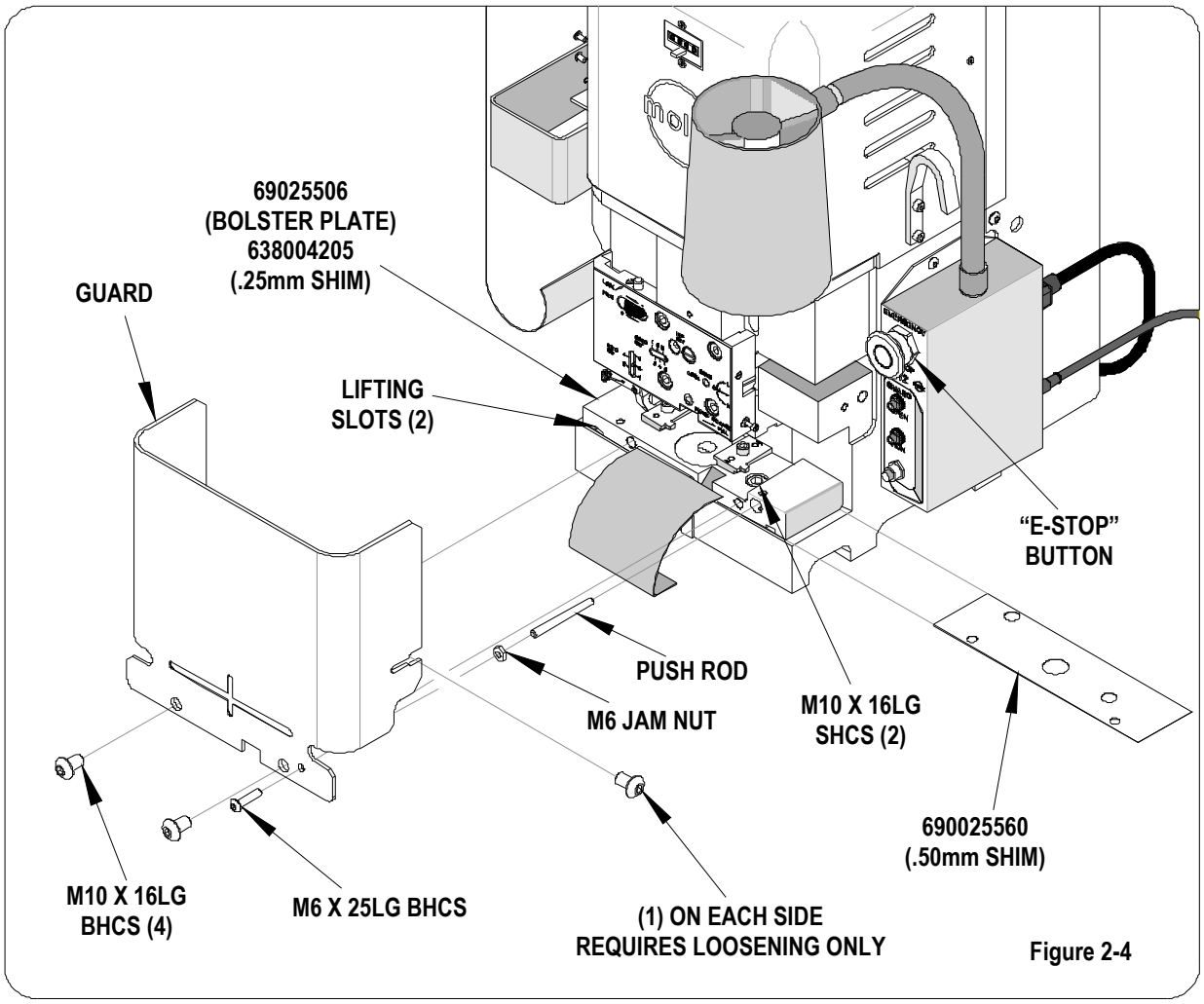

Figure 2-4

Refer to Section 3 for setup, manual cycling, and operation before attempting any crimp terminations under power. If the press is running, push the emergency stop button located on the front of the press control assembly. The motor and flywheel will stop. The work light will still operate.

1. Remove the press guards by removing the (2) M10 BHCS (See Figure 2-4) located on the front bolster plate, and loosen (1) on each side. Once removed, the guard interlock switch will disconnect power to both the motor and clutch.
2. Remove the push rod from the hole on the right side of the bolster plate. If necessary, remove any tooling, and then remove (2) M10 SHCS attaching the bolster plate to the press frame.
3. Lift the bolster plate away from the locating dowels by placing a screwdriver in the (2) lifting slots on the underside of the bolster plate. Remove or install the .50mm (.020”) spacer and verify the presence of the .250mm (.010”) spacer.
4. Position the bolster plate on the locating dowels and refasten with the (2) M10 SHCS. Replace the push rod. Follow the tooling setup procedures in Section 3.

CAUTION: Always manually cycle the press before restoring power to the machine.

Section 3

Setup and Operation

3.1 Termination Die Set Installation and Removal

3.2 Loading the Terminal Strip

3.3 Punch and Anvil Alignment

3.4 Feed Finger Adjustment

3.5 Forward Feed Adjustment

3.6 Back Stroke Adjustment

3.7 Manually Cycling Press

3.8 Conductor Crimp Punch Adjustment

3.9 Insulation Crimp Punch Adjustment

3.10 Operation

3.1 Termination Die Set Installation and Removal

Always turn off and disconnect the power supply to the press. Power down the press by pressing the emergency stop button located on the front of the control panel.

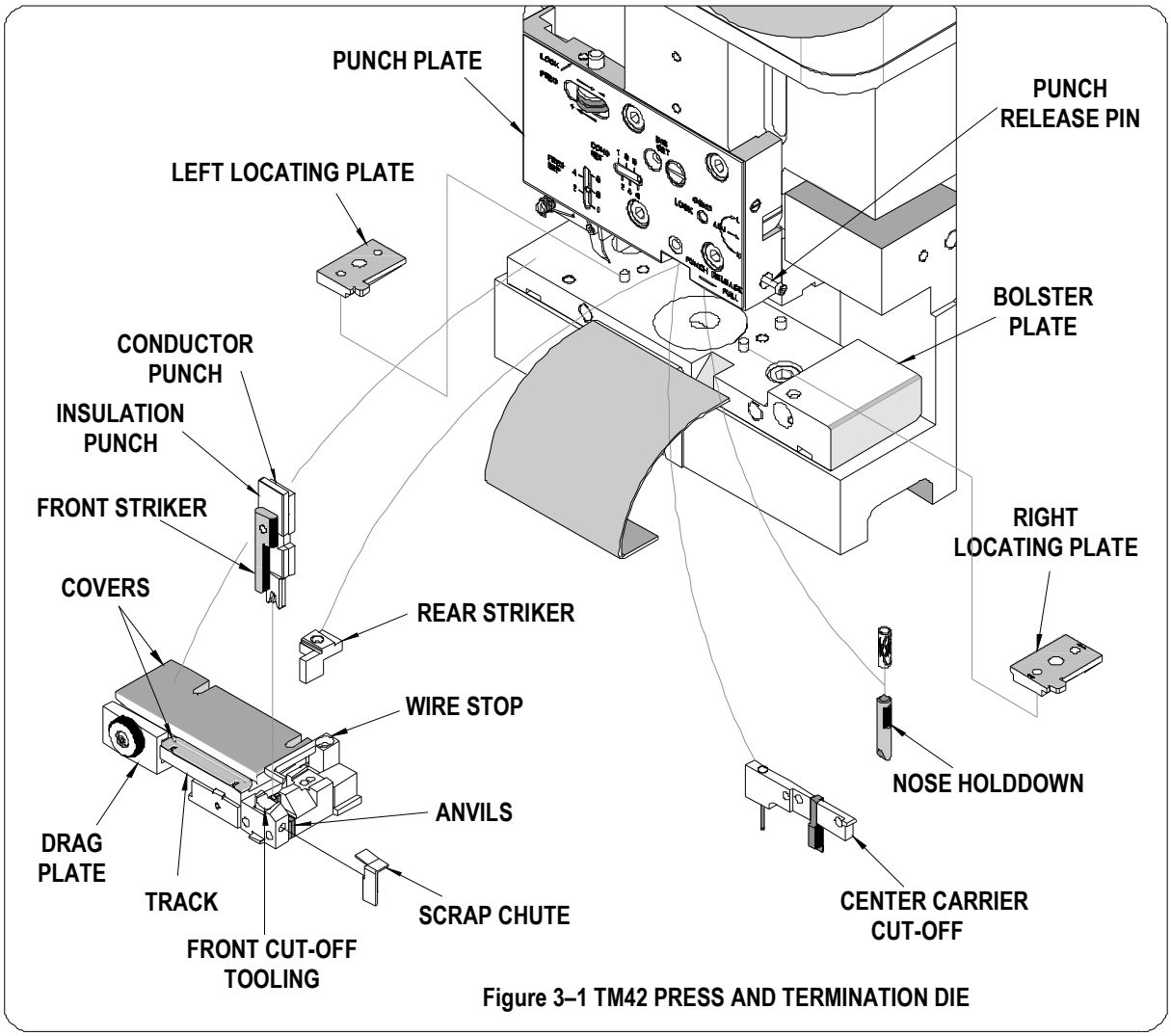

Figure 3–1 TM42 PRESS AND TERMINATION DIE

Termination Die Removal

1. Remove the press guards by removing the (2) M10 BHCS (See Figure 1-4) located on the front bolster plate, and loosen (1) on each side.

NOTE: Once removed, the guard interlock switch will disconnect power to both the motor and clutch. The work light will still operate if the unit is still connected to the power source.

2. Set both the conductor and insulation indicators to a reference setting of “1”. See Figure 3-3.
3. Loosen the M5 BHCS and remove the right locating plate.
4. Lift the feed finger clear and slide the terminator die out of the press.
5. Remove the punches, nose hold-down, rear striker, and center carrier cutoff tooling.
6. The terminator die is best stored in its original container.

Termination Die Installation

Before any die is installed make sure the cover alignment procedure and the track adjustment procedure, (when applicable) have been completed. See the appropriate terminator die instruction manual for these procedures.

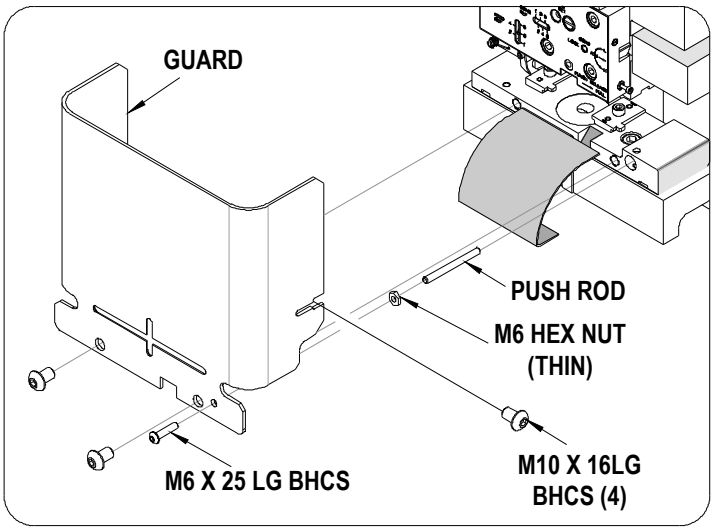

Figure 3-2 GUARD REMOVAL

1. Power down the press and remove the guards as described in Section 3.1.1, steps 1 and 2.
2. Not all terminator dies have contact nose hold down, rear strikers, or center carrier cutoff tooling. If present on the terminator die, attachment points are located behind the punches either in the front of or on the bottom of the ram See Figure 3-1. Refer to the assembly drawing supplied with each individual terminator die for parts supplied with that terminator.
3. Fit the (2) punches in the opening on the underside of the ram. The conductor punch should be positioned in the rear See Figure 3-1. A click will be heard when the punch retaining/release pin engages.
4. Set both the conductor and insulation indicators to a reference setting of "1". See Figure 3-3.
5. The front striker slides in front of the punches and is attached with a screw through the hole in the punch plate.
6. Make sure the bolster plate is clean and free of debris.
7. Lift the feed finger clear and slide the terminator die onto the left locating plate.
8. Attach the right locating plate and tighten the M5 BHCS.

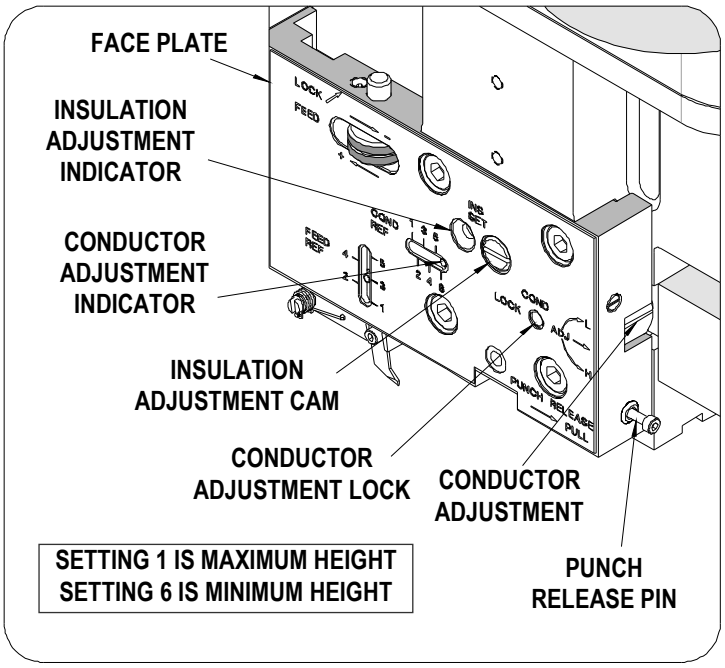

Figure 3-3 HEIGHT SETTING

3.2 Loading the Terminal Strip

CAUTION: The specified terminal is printed on the setup sheet supplied with the terminator die. Do not use any terminal not indicated on that setup sheet.

1. Power down the press and remove the guards as described in Section 3.1.1, steps 1 and 2.
2. Remove the pull pin and outer hub on the press reel support.
3. Remove all tape on the edge of the reel.
4. Place the terminal reel on the exposed shaft so the terminal strip comes off the reel in proper orientation.
5. Place the outer hub back on the shaft and lock in position so there is enough tension so that the reel does not freely rotate and unwind the terminals. The tension should be loose enough that a light pull on the terminals will rotate the reel.
6. Place the pull pin back on the end the shaft. This will prevent the hub from falling off should the hub locking screw become loose.
7. Unwind the terminal strip under the terminal guide. See Figure 3-4. Be careful not to distort the terminals or the strip while feeding the terminals into the terminator die.

8. Most terminator dies do not have any track adjustment features. For this type, lift both the drag and anti-back-up pins located on the front of the terminator die. This will allow the terminals to slide freely through the terminator die track. See Figure 3-5.
9. For track adjustment type terminator dies rotate the drag cam until the drag frame is fully raised. See Figure 3-6. This will allow the terminal to slide freely through the terminator die track.

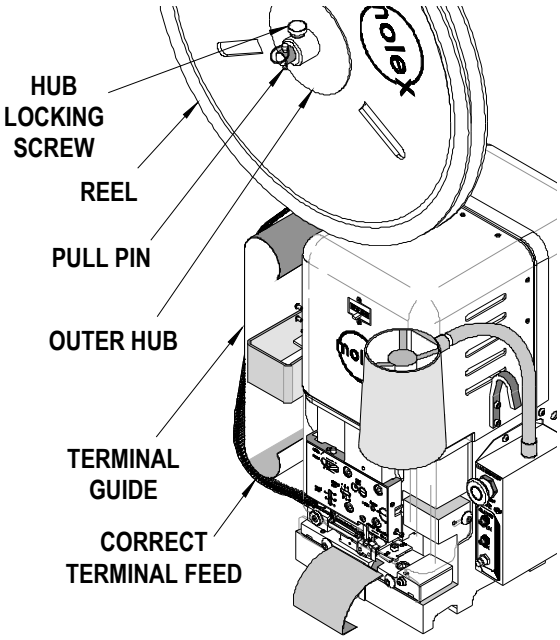

Figure 3–4 REEL INSTALLATION

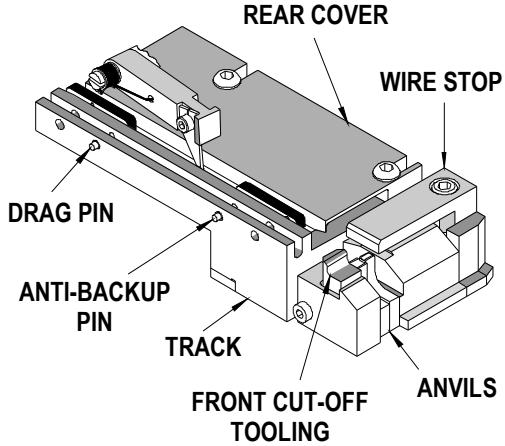

Figure 3–5 NON-ADJUSTABLE TRACK

10. Load the terminal strip under the rear cover plate until the first terminal comes to rest centered above the anvil. See Figure 3-7.
11. Release the terminal drag and anti-backup pins for non-adjustment terminators, or rotate the drag cam to engage the terminal drag frame on the track adjustment style dies.

CAUTION: Terminals and terminal carrier strips may have sharp edges that can scratch or cut. Use caution while handling terminals.

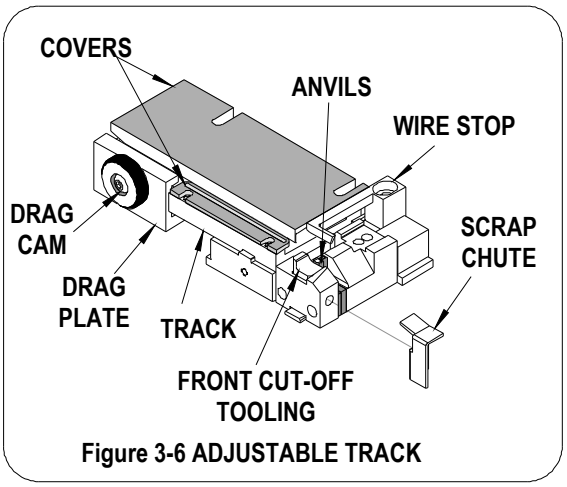

Figure 3-6 ADJUSTABLE TRACK

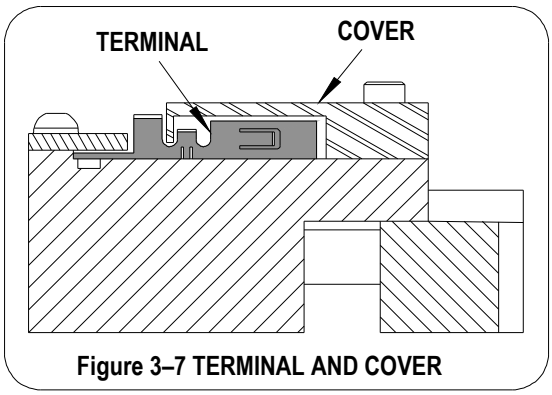

Figure 3–7 TERMINAL AND COVER

12. To remove the terminal strip, raise the terminal drag and/or anti-back-up finger. Lift the feed finger and pull the terminal carrier strip back using needle nose pliers until disengaged from the terminator track. If preferred, cut the terminal carrier strip and pull it through the terminator die.

3.3 Punch and Anvil Alignment

The following procedure will align the punch and anvil profiles.

1. Power down the press and remove the guards as described in Section 3.1.1, steps 1 and 2.
2. With a terminal in position over the anvils, slightly loosen the front and/or back anvil mounting screws (See Figure 3-8) and center carrier cut-off tooling when applicable. See Figure 3-1.
3. Slowly hand cycle the ram of the press to the bottom of its stroke.
4. In this position, tighten the anvil mounting screws and center carrier cut-off tooling when applicable to ensure proper alignment of punches, anvils, and cut-off tooling.

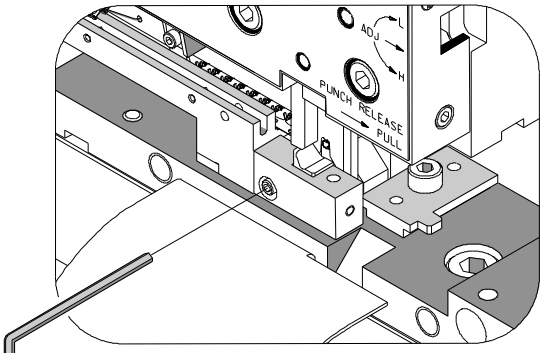

Figure 3-8 PUNCH AND ANVIL ALIGNMENT

3.4 Feed Finger Adjustment

1. Power down the press and remove the guards as described in Section 3.1.1, steps 1 and 2.
2. Loosen the terminal feed finger shaft locking screw (M4) and slide the feed finger shaft in or out. See Figure 3-9.
3. Position the feed finger to pick up the best feeding position. This may differ from terminal to terminal. Typically, terminals are fed via carrier strip holes or by the tab between the insulation terminal section and the carrier strip.
4. With a small screwdriver, rotate the feed finger shaft CW to increase or CCW to decrease spring tension on the feed finger. Tighten the feed finger shaft locking screw to lock the feed finger in position. See Figure 3-10.
5. Cycle the press by hand (See Section 3.7) to be certain that the feed finger transfers the next terminal to be aligned over the anvil.
6. Check that all other parts slide and engage without any interference.
7. Repeat this procedure several times.
8. If a manual cycle cannot be completed, or the terminal is not positioned over the anvil, refer to Sec 3.4 to 3.7.

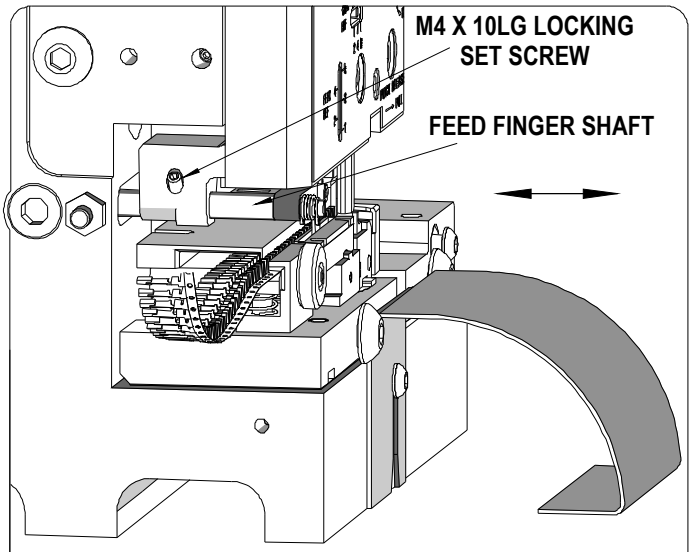

Figure 3-9 FEED FINGER SHAFT

3.5 Forward Feed Adjustment

A forward or backstroke feed adjustment may be necessary if the terminal is not centered over the anvil during the manual cycle.

1. Power down the press and remove the guards as described in Section 3.1.1, steps 1 and 2.
2. To check the forward feed position, the terminal being crimped should be positioned exactly over the anvil and the ram in the up position.

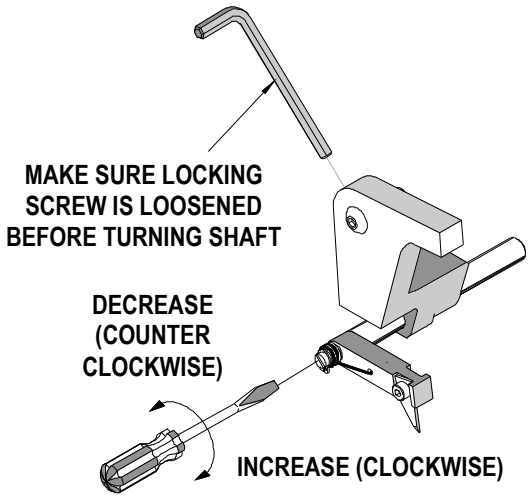

Figure 3–10 FEED FINGER ADJUSTMENT

3. Loosen the M6 forward feed adjustment lock screw located on the top of the punch plate. See Figure 3-11.
4. Rotate the forward feed adjustment wheel to center the terminal over the anvil.
5. After adjusting the forward feed position of the terminal, tighten the M6 forward feed adjustment lock screw.
6. For future reference, document the feed position on the forward feed adjustment indicator

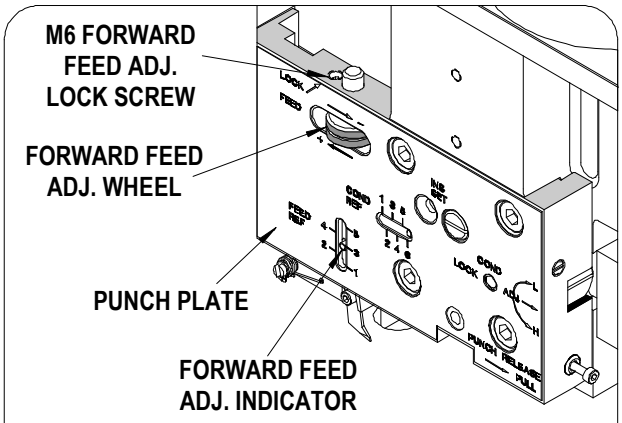

Figure 3–11 FORWARD FEED ADJUSTMENT

3.6 Back Stroke Feed Adjustment

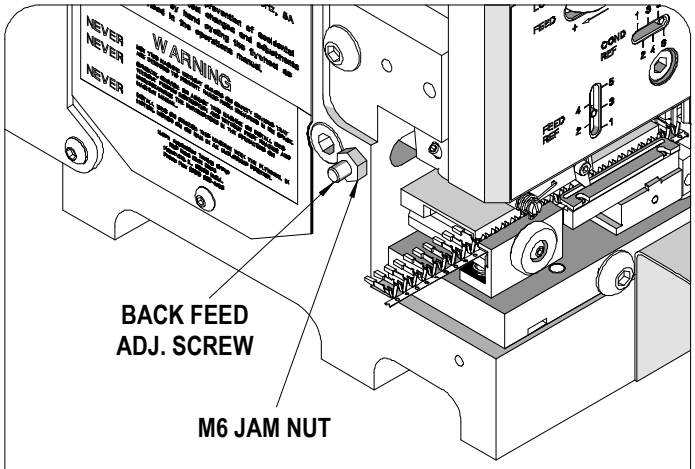

Figure 3–12 BACK STROKE ADJUSTMENT

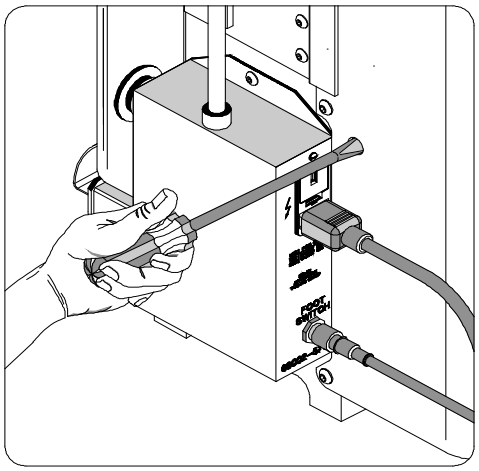

Figure 3–13 MANUAL CYCLE CLUTCH RELEASE

1. The feed finger requires over-travel on the backstroke to pick up the next position on the loaded terminal strip.
2. Manually cycle the press 180 degrees to the bottom dead center position.
3. With the press in the down position, loosen the M6 hex jam nut. See Figure 3-12.
4. Adjust the M6 back feed adjustment screw to change the backstroke position of the feed finger.
5. After the stroke is adjusted, tighten the M6 hex jam nut.
6. Verify the forward stroke position readjust if necessary.

3.7 Manually Cycling the Press

CAUTION: By disengaging the actuator (See Figure 4-2) the ram will be free to move. The weight of the ram can result in downward motion. Use caution to ensure that the area under the ram is clear of fingers and hand tools. The machine guard should be in place.

1. Power down the press by pressing the emergency stop button located on the front of the control panel.
2. Release the clutch by inserting a screwdriver through the access hole to trip the locked actuator.
   See Figure 3-13.

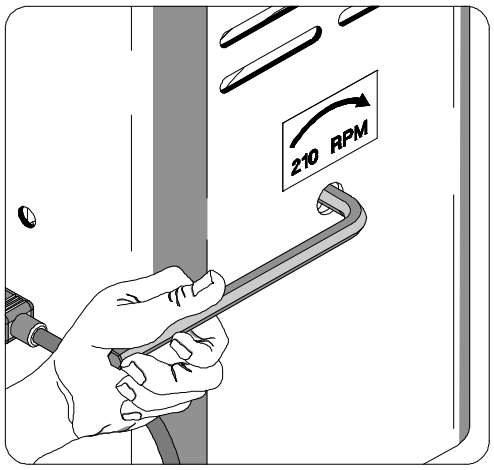

Figure 3–14 MANUAL CYCLING

3. Insert the 10mm hex wrench through the hole in the center of the rear cover and engage it in the socket in the press flywheel. See Figure 3-14.
4. Rotate the press flywheel to move the ram as desired.

WARNING: Never insert anything through this hole while the press is under power.

3.8 Conductor Crimp Punch Adjustment

1. With the guards in place, insert a stripped length of specified wire into the terminal and terminate the wire under power. Refer to the terminal specification sheet supplied with the terminator die.
2. Examine the quality of the initial conductor crimp and measure the crimp height (See Appendix A: Crimp Terminations).
3. Power down the press and remove the guards as described in Section 3.1.1, steps 1 and 2.

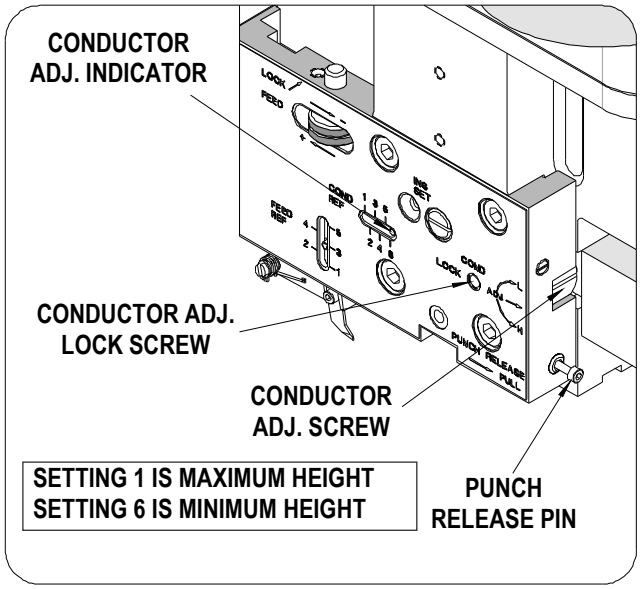

Figure 3-15 CONDUCTOR CRIMP HEIGHT ADJUSTMENT

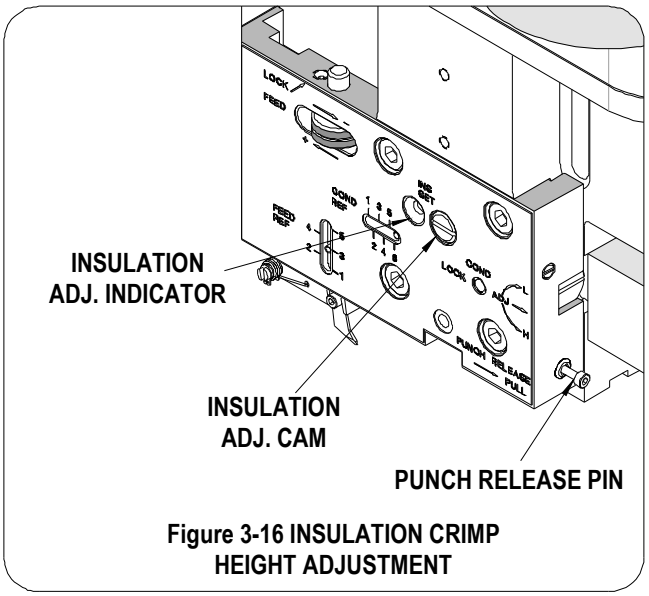

Figure 3-16 INSULATION CRIMP HEIGHT ADJUSTMENT

4. Loosen the M6 conductor adjustment lock screw located on the front of the punch plate. See Figure 3-15.
5. With a screwdriver, turn the conductor adjusting screw located on the right side of the punch plate. Rotating the adjusting screw clockwise one full turn will lower the crimp height approximately .03mm (.001"). Each increment in the reference window represents approximately .13.00mm (.005") for a total adjustment of .65.00mm (.026"). The "1" setting, on the Conductor Adjustment Indicator, equates to the largest crimp height and the "6" setting is the smallest.
6. Tighten the M6 locking screw.
7. Replace the machine guards and repeat the above steps until the desired crimp height is obtained (See Appendix A, Crimp Terminations).
8. Perform a pull force test to verify the mechanical integrity of the crimp. (See Appendix A, Crimp Terminations).

3.9 Insulation Crimp Punch Adjustment

1. Place a stripped length of wire into the terminal and terminate under power.
2. Examine the quality of the initial insulation. See Appendix A, Crimp Terminations.
3. Power down the press and remove the guards as described in Section 3.1.1, steps 1 and 2.

4. Rotate the insulation adjusting screw to obtain the required insulation crimp height. Each increment in the reference window represents approximately .2.00mm (.0078") for a total adjustment of 1.60mm (.063"). The "1" setting, on the Insulation Adjustment Indicator, equates to the largest crimp height and the "8" setting is the smallest. See Figure 3- 16.
5. Repeat the above steps until the desired insulation crimp height is obtained.

NOTE: Due to the large variety of insulation wall thickness, material, and durometers, Molex does not specify insulation crimp height. The insulation crimp height should be inspected, measured, and documented as a quality indicator for all wire types and sizes.

3.10 Operation

1. Check that all setup procedures were followed and that the terminations are meeting specification.
2. Verify the machine was manually cycled before operating under power.
3. With guards in place, turn on the press by pressing the run button on the front of the press control assembly. The motor starts and the run light comes on. Pressing the Emergency Stop button disconnects power to the motor and the clutch. The run light goes off.

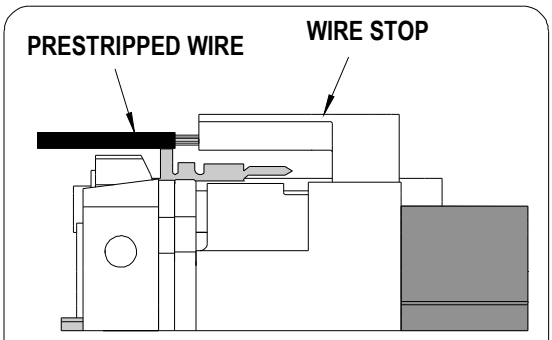

Figure 3–17 WIRE POSITIONING

NOTE: To fully remove power to the press, unplug the power cord from the press control assembly.

4. Place the pre-stripped wire through the slot in the guard above the terminal and touch the wire stop. See Figure 3-17.
5. Press the foot pedal down once and release. The press will cycle once. Keep the foot raised or remove it from the foot pedal to prevent unwanted crimp cycles.

CAUTION: Call maintenance immediately if the press cycles more than once. Do not operate the press. See Section 4.5 Clutch Unit.

6. The press is set up to have a terminal over the anvil before beginning the crimp cycle. During the crimp cycle, but after the wire is terminated, the operator should make a slight rightward motion of the crimped wire/terminal. This rightward motion should take place during the upward cycle of the press. This will prevent the next indexing terminal from being tangled during the upward cycle of the press.
7. Be sure to remove the crimped terminal out of the slot in the guard before the next termination.
8. Periodically check the terminations for crimp height and visual attributes described in Appendix A: Crimp Terminations, and Appendix B: Statistical Process Control.

Section 4

Maintenance and Clutch Unit Service

4.1 Cleaning

4.2 Lubrication

4.3 Perishable Orders

4.4 Spare Orders

4.5 Clutch Unit Service/Adjust and Repair

4.6 Oiler

4.1 Cleaning

WARNING: Disconnect the power cord from the power source during all maintenance operations.

For efficient operation, the TM42 press should be cleaned daily with a soft bristle brush to remove any carrier strip debris and terminal plating dust from the tooling area. For continuous operation, this may have to be done more frequently.

When it is necessary to change a terminator die, use caution removing any debris from tapped holes in the press base where the applicator mounts. Debris can prevent tooling from being properly locked into position.

CAUTION: Cleaning using compressed air is not recommended. Chips can wedge in the tooling and/or cause injury.

NOTE: Do not use solvents to clean the guards. Window cleaner and a soft cloth should be used. If the guarding becomes scratched or scuffed, replacement may be necessary.

4.2 Lubrication

(Excluding clutch assembly) All bearing areas are pre-lubricated and sealed for life.

An example of a maintenance chart is shown below. Copy and use this chart to track the maintenance of your TM42 Press or use this as a template to create you own schedule or use your company's standard chart, if applicable.

Preventive Maintenance Chart

Daily: Clean. See Section 4.1.
As Required: Lubricate. See Section 4.2)

CHECK SHEET MONTH_____ YEAR _____

Week	Daily Cycles	Daily Clean	Days of the Week							Solution
			MON	TUE	WED	THU	FRI	SAT	SUN	
1										
2										
3										
4										
Cleaning Reapply grease Reapply oil	25,000	Yes								Soft Brush Industrial Degreaser
Inspect all tooling, Feed fingers etc. for wear	25,000	Yes								Replace if signs of wear.

Schedule should be adjusted up or down depending on usage. Molex recommends that a log of preventive maintenance be kept with the press.

4.3 Perishable Orders

Perishable parts are those parts that come into contact with the product and may wear over time. The customer is responsible for maintaining these parts and Molex recommends that they keep at least one set in stock at all times. There are no perishable parts on the TM42 press. However there are perishable parts on the termination die sets. Refer to the instructions that come with the dies.

4.4 Spare Orders

Spare parts are available to support the TM42 Termination Machine. Moving and functioning parts can be damaged or malfunction. Molex recommends that the customer keep some or all of them in stock to reduce down time. These parts are identified in the Orders List in Section 5.

4.5 Clutch Unit Service Adjust/Repair

CAUTION: Disconnect power cord from power source during all maintenance.

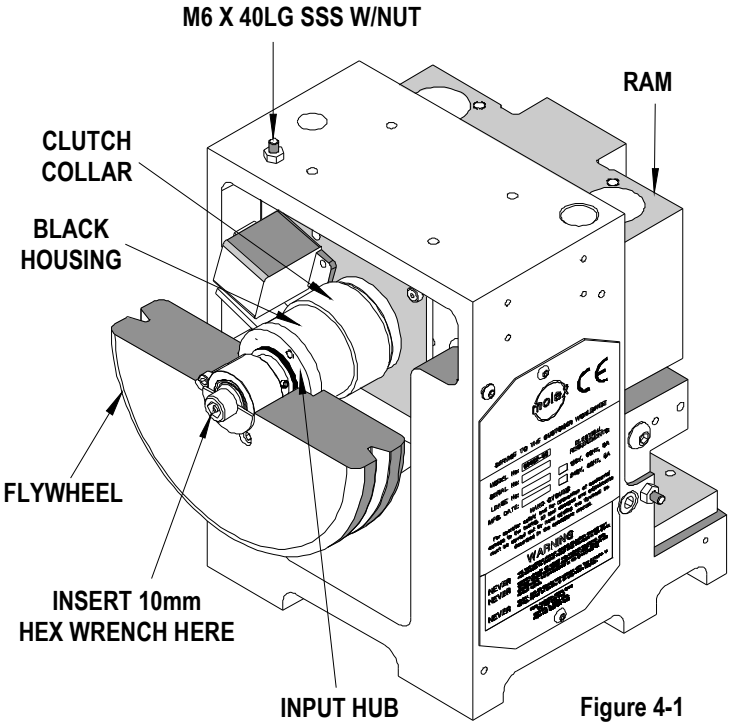

Figure 4-1

Operational Check 1

1. Remove the rear cover of the TM-42 unit. Verify that the clutch control collar is in the locked position (See Figure 4-2). Insert the 10mm hex wrench into the socket head cap screw. This screw is located in the center of the flywheel (See Figure 4-1). This screw is spring loaded to prevent being left in the unit.
2. Attempt to rotate the hex wrench clockwise. If the unit will not turn, it is functioning properly.
3. Next rotate the input hub/flywheel clockwise by hand. The input hub/flywheel should be free to rotate. During this portion of the operational check, the black spring housing should not rotate. See Figure 4-1.
4. If the unit fails operational check 1, the clutch unit has failed internally or the actuator is not functioning properly and the clutch unit must be replaced.

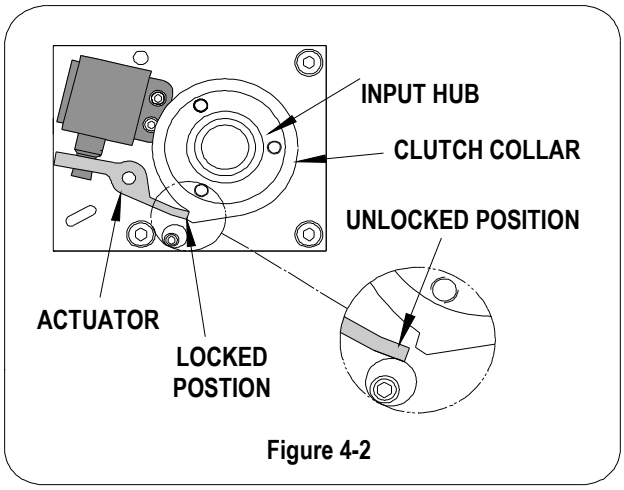

Figure 4-2

CAUTION: By disengaging the actuator (See Figure 4-2) the ram will be free to move. The weight of the ram can result in downward motion. Use caution to ensure that the area under the ram is clear of fingers and hand tools. The machine guard should be in place.

Operational Check 2

1. Verify that the clutch control collar is unlocked. See Figure 4-2. The crankshaft, input hub/flywheel, and black spring housing should rotate freely with the 10mm wrench moving the ram down and up.
2. After 360 degrees of clockwise rotation, the actuator will engage the clutch control collar and rotation will stop. This is normal operation.

3. If rotation with the 10mm wrench is not possible and the actuator is disengaged, the clutch unit is demonstrating early signs of failure and must be replaced.

Removing the Clutch Unit

WARNING: This procedure should be followed to ensure compliance with safety instructions. Molex cannot accept liability in the event of a subsequent accident caused by clutch failure when improperly serviced by the customer.

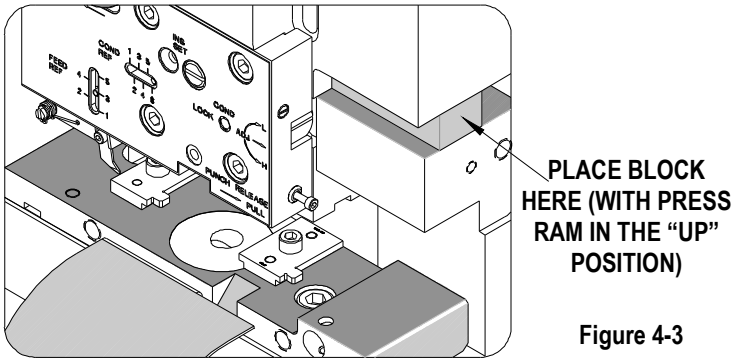

Figure 4-3

See Figure 4-4 for the following steps.

1. Power down the press and remove the guards as described in Section 3.1.1, steps 1 and 2.
2. Support the ram in the upper position with a hardwood wedge (approximately 1 7/8" high). See Figure 4-3.
3. Remove the terminal reel support arm and the top and rear covers, separate connector from counter.
4. Disconnect leads from solenoid.
5. Leave the V-belt in a position to support weight when removing and replacing the flywheel.
6. Remove the Flywheel Bearing Retainer Screw and washer from the end of the crankshaft.
7. Remove (3) M6 x 40 Long SHCS from the Flywheel.
8. Remove the flywheel. The inner race of the flywheel may stay on the crankshaft when the flywheel is removed.
9. Remove the 5.0mm x 35 Long spiral pin from the clutch and crankshaft using a drive punch.
10. Remove the (3) M6 x 16 Long SHSS (socket head shoulder screw) from the clutch plate.
11. Pull the clutch/solenoid assembly from the crankshaft. This may require pry bars to push from the rear side of the clutch plate. If the inner race of the flywheel remained on the crankshaft, it will be pushed off before the solenoid/clutch assembly.
12. Determine if the inner race for the flywheel can be reused or be replaced.

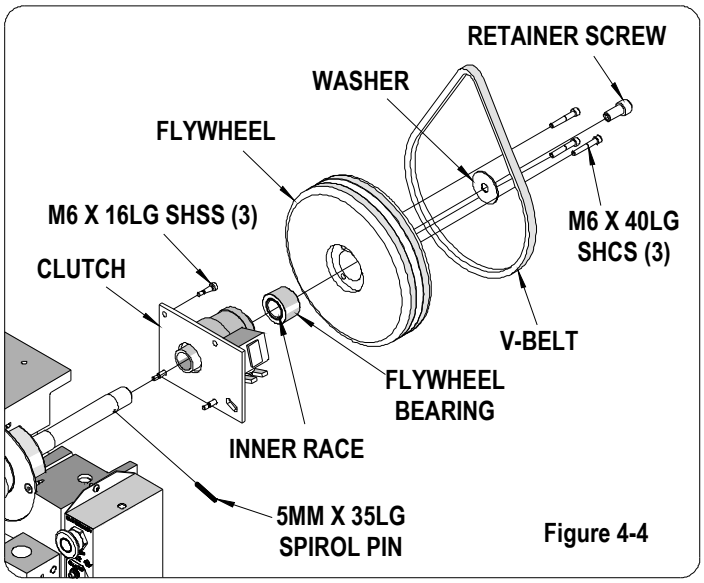

Figure 4-4

Installing the Clutch Unit

Note: The (3) M6 x 16 Long SHSS (socket head shoulder screw) used to mount the clutch plate permit free axial and radial movement around the crankshaft. This allows the friction surfaces to be in perfect alignment for the wrap-up function of the springs. Free movement of the unit is necessary because the brake hub is rigidly attached to the clutch plate and any restrictions could result in malfunction and possible damage to the springs.

See Figure 4-4 for the following steps.

1. Slide the solenoid/clutch assembly onto the crankshaft.
2. Replace (3) M6 x 16 Long SHSS
3. Secure the clutch to the crankshaft by inserting a new 5mm x 35 Long spiral pin.
4. Adjust the clutch timing. See Section 4.5.5, Solenoid/Clutch Assembly Adjustment.
5. Slide the inner race onto the crankshaft followed by the flywheel.
6. Replace the (3) M6 x 40 Long SHCS in the flywheel.

7. Replace the Flywheel Bearing Retainer Screw and washer in the end of the crankshaft.
8. Reconnect the leads for the clutch solenoid.
9. Replace the V-Belt.
10. Replace rear and top covers and the reel support assembly.
11. Remove the hardwood wedge from under the ram.
12. Replace front guard.

Adjustment for the Solenoid/Clutch Assembly

CAUTION: By disengaging the actuator (See Figure 4-2) the ram will be free to move. The weight of the ram can result in downward motion. Use caution to ensure that the area under the ram is clear of fingers and hand tools. The machine guard should be in place.

1. Remove the rear cover of the TM-42 unit.
2. Locate the retaining ring in front of the clutch control collar. See Figure 4-1. Using a regular tip screwdriver, unseat the ring from its groove and slide it towards the flywheel.
3. Insert the 10mm hex wench into Flywheel Bearing Retainer Screw. Hold the wrench firmly and release the clutch control collar by lifting up the actuator. See Figure 4-5. The crankshaft, input hub/flywheel, and black spring housing are now free to rotate.
4. Rotate the 10mm hex wrench clockwise observing the rams down and up motion. When the ram has traveled a complete down and up motion, hold the position of the ram just past top dead center (this is when the ram has traveled to the full up position and starts its descent downward).
5. Now observe the relationship of the control collar to the actuator (See Figure 4-5), if the control collar is butted up against the actuator, no adjustment is required.

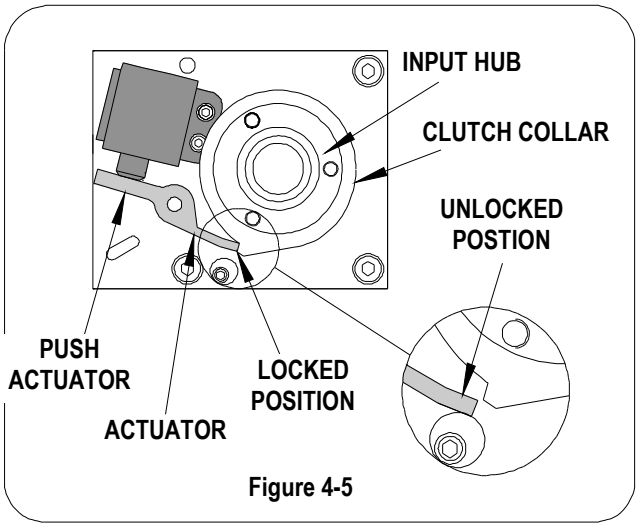

Figure 4-5

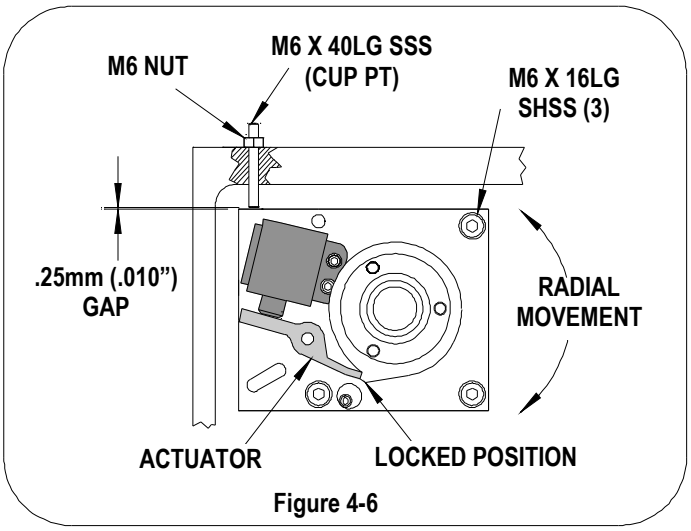

Figure 4-6

6. If the control collar stops short of the actuator, pull the control collar back towards the flywheel and reposition the collar to the new setting. The control collar use spline teeth to control the engagement.
7. Replace the retaining ring to lock the control collar in position.
8. Verify proper clearance for radial movement of the solenoid/clutch assembly. Check the gap between the solenoid/clutch mounting plate and the M6 stop screw located on the upper left hand corner. If the gap is more or less than the recommended .25.00mm (.010") loosen the M6 nut and adjust the screw to the appropriate gap. Be certain to tighten the nut and double check the gap after securing the nut. See Figure 4-6.

Solenoid/Clutch Assembly Lubrication

The clutch has sintered metal components that have been impregnated with bearing infusion oil No. 33 for permanent lubrication, by the manufacturer. When the machine is subjected to continuous heavy duty operation, operates in high temperature, or in less than clean environments, the bearing oil may be washed out or the assembly may become polluted with foreign matter. Flushing in a lighter bearing infusion oil as used in manufacturing can restore efficiency. If this process proves ineffective, the solenoid/clutch assembly should be replaced.

CAUTION: Never use solvents to clean sintered metal parts.

4.6 Oiler

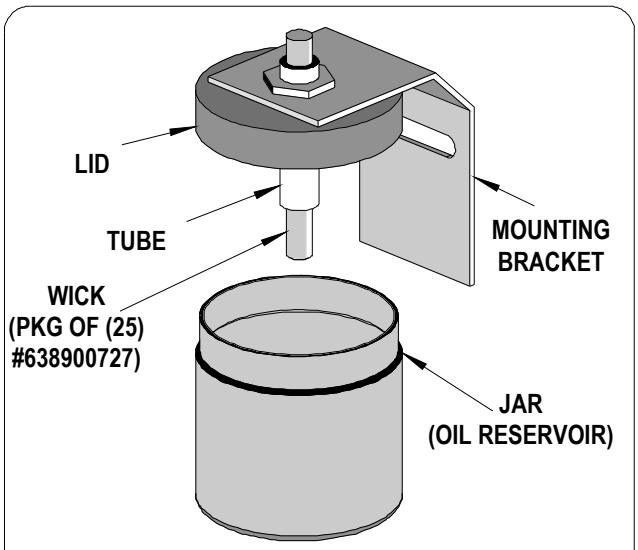

Figure 4-7 OILER ASSEMBLY

Description

The wick action oiler is included as an option to lubricate the products as they enter and are fed through tooling to ensure smooth, trouble free operation. The oiler applies a thin coat of oil to the terminals for proper feed and better release from termination punches. The oiler is primarily used for terminals with gold plating. To avoid contamination when shipped and during setup, the oiler is shipped from the factory with no lubricant oil.

Adjustments

Oiler Position

Adjust the position of the oiler unit using the mounting screw that attaches the oiler to the guard assembly. Simply loosen the screw and slide the unit to the desired position and tighten the screw. The unit can be removed and placed on the right side of the guard assembly for rear feed applications.

Oiler Wick

Adjust the height of the oiler wick by pulling up or pushing down on the wick to the appropriate height. The wick can be moved using pliers or simply grab it with your fingers.

Maintenance

Filling the Reservoir

While firmly holding the Lid, screw the Jar (Oil Reservoir) counter clockwise until it is removed. Fill the Jar with the desired lubricant oil and replace the Lid.

Replacing the Wick

While firmly holding the Lid, screw the Jar (Oil Reservoir) counter clockwise until it is removed. Feed a new Wick up into the tube until it protrudes from the top end of the tube and replace the lid.

Package of (25) Wicks:
Molex Order No: 63890-0727

Lubricant Oil

Recommended oil: Transdraw B-19

Vendor: Mid-Town Petroleum
9707 South 76th Avenue
Bridgeview, IL 60455
Toll-Free: 877-255-3533
Direct: 708-599-8700

Fax: 708-599-1040
E-mail: sales@midtownoil.com
www.midtownoil.com
www.precisionlubricantsinc.com

Adding a New Oiler to an Older Press

If your TM42 Presses was produced before 1996, it did not include provisions to mount an oiler.

To install a Terminal Oiler Order No. 63890-0720 to your press you will need to add a mounting hole. Locate this hole on the left side of the frame, with the front of press facing you, under the track.

1. Use the following procedure to install the oiler.
2. Drill 4.20mm (.165”) diameter x 17.00mm (.62”) deep in location shown in the figure below.
3. Tap M6-1.0 x 12.00mm (.47”) deep.
4. Use a M6 BHCS and M6 flat washer to secure oiler onto frame.

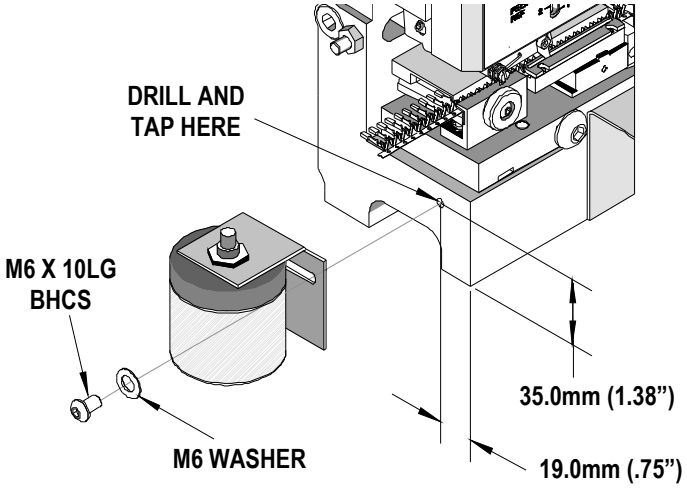

Figure 4-8

Section 5

5.1 Parts List

5.2 Assembly Drawings

5.3 Electical Schematics

5.4 Toubleshooting

The following pages contain the Orders Lists and Assembly Drawings for the TM42 Terminator Machine. Here are several tips to help you better understand and use this material.

1. The **"Item"** number in the Orders List matches the number in the balloon on the assembly drawing immediately following that list.
2. The **"Order No."** is the number to use if ordering that particular item.
3. The **"RSP"** appearing at the end of some description columns means this item is a **R**ecommended **S**pare **Order**.
4. The **"Req'd."** number is the quantity of that particular part required per assembly and is also the quantity Molex recommends the user keep on hand if this is a **R**ecommended **S**pare **Order**

5.1 Parts List

Item	Order No.	Engineering No.	Description	RSP / PP Parts and notes	Quantity
1	11-40-0185	TM40-68	Lifting Hook		2
2	11-40-0218	TM40-100	Locating Plate		1
3	REF	REF	Domestic Orders Kit (TM42)		REF
4	11-41-0264	KM241	Molex Logo 3 Inch		1
5	63800-4201	63800-4201	Serial Number Plate CE Name Plate		1
6	63800-4205	63800-4205	Bolster Plate Shim (USA) (Shipped with Press)		1
7	69002-5012	69002-5012	Support Tube Weldment		1
8	69001-0105	69001-0105	Straight Feed Finger	**RSP**	1
9	69001-0106	69001-0106	Angled Feed Finger	**RSP**	1
10	69002-5004	69002-5004	Bolster Plate Assembly		1
11	69002-5005	69002-5005	Adjusting Cam Assembly		1
12	69002-5013	69002-5013	Disc Assembly		2
13	69002-5073	69002-5073	TM42 Main Wiring Harness		1
14	69002-5074	69002-5074	Counter Assembly (Resettable With Leads)		1
15	69018-6052	69018-6052	Limit Switch	**RSP**	1
16	69002-5099	69002-5099	Instruction Manual – TM42		1
17	69002-5504	69002-5504	Ram Wear Plate		2
18	69002-5505	69002-5505	Leader Pin		2
19	69002-5507	69002-5507	Guide Block		1
20	69002-5510	69002-5510	Adjusting Cam – Conductor Punch		1
21	69002-5511	69002-5511	Adjusting Wheel – Conductor Cam		1
22	69002-5512	69002-5512	Punch Lock Pin		1
23	69002-5518	69002-5518	Eccentric Bearing Retainer		1
24	69002-5520	69002-5520	Crankshaft Bearing Retainer		1
25	69002-5521	69002-5521	Flywheel		1
26	69002-5523	69002-5523	Flywheel Bearing Retainer		1
27	69002-5524	69002-5524	Feed Lever		1
28	69002-5525	69002-5525	Feed Arm Shaft		1
29	69002-5526	69002-5526	Feed Arm		1
30	69002-5527	69002-5527	Feed Arm Spring	**RSP**	1
31	69002-5531	69002-5531	Top Cover		1
32	69002-5532	69002-5532	Top Cover Plate		3
33	69002-5533	69002-5533	Die Guard	**RSP**	1
34	69002-5537	69002-5537	Limit Switch Mounting Bracket		1
35	69002-5539	69002-5539	Push Rod	**RSP**	1
36	69002-5540	69002-5540	Trip Rod		1
37	69002-5541	69002-5541	Plunger		1
38	69002-5546	69002-5546	Feed Adjusting Thumb Nut		1
39	69002-5547	69002-5547	Hand Rest		1
40	69002-5548	69002-5548	Punch Plate Label		1
41	69002-5550	69002-5550	Threaded Insert		1
42	69002-5552	69002-5552	Flywheel ROT/RPM Label		1
43	69002-5555	69002-5555	Flywheel Bearing Retainer Screw		1
44	69002-5556	69002-5556	Terminal Guide		1
45	69002-5557	69002-5557	Mounting Bracket		1
46	69002-5560	69002-5560	Bolster Plate Shim (For European Press)		1
47	69002-5563	69002-5563	Bushing		1
48	69002-5604	69002-5604	Punch Face Plate		1
49	69002-5605	69002-5605	Feed Adjusting Rod		1

Item	Order No.	Engineering No.	Description	RSP / PP Parts and notes	Quantity
50	69002-5606	69002-5606	Crankshaft		1
51	69002-5607	69002-5607	Front Bearing Retainer		1
52	69002-5608	69002-5608	Rear Cover		1
53	REF	REF	Label – Box (Domestic Orders Kit)		REF
54	63800-4210	63800-4210	Control Assembly	**RSP**	1
55	63800-8394	63800-8394	Foot Switch Assembly	**RSP**	1
56	69002-5717	69002-5717	Painted Frame		1
57	69002-5718	69002-5718	Painted Ram		1
58	69018-5044	69018-5044	110/V AC 60 Hz Motor **		1
59	69018-6219	69018-6219	Fuse (8 – AMP) **	**RSP**	2
60	69018-6237	69018-6237	Power Cord (120V) **		1
61	69018-6241	69018-6241	Solenoid/Clutch Assembly		1
62	69018-6271	69018-6271	Light Bulb (120V) 50 Watt **	**RSP**	1
63	69018-7029	69018-7029	Ball Sealed Bushing		4
64	69018-7031	69018-7031	Crankshaft Bearing		1
65	69018-7032	69018-7032	Main Inner Ring		1
66	69018-7033	69018-7033	1.625 OD Outer Ring Flywheel Bearing		1
67	69018-7034	69018-7034	1.1241 OD Inner Race		1
68	69018-7035	69018-7035	Eccentric Outer Ring Assembly		3
69	69018-7036	69018-7036	Eccentric Inner Ring		3
70	69018-7037	69018-7037	V-Belt	**RSP**	1
71	69018-7038	69018-7038	Pulley		1
72	69018-8089	69018-8089	Ball Plunger		1
73	69018-8135	69018-8135	Knurled Knob		1
74	69018-8136	69018-8136	Pip Pin		1
75	69018-8235	69018-8235	Hex Wrench – 10mm		1
76	69018-9500	69018-9500	Compression Spring	**RSP**	1
77	69018-9542	69018-9542	Eject Pin Spring	**RSP**	1
78	69018-9594	69018-9594	Feed Lever Spring	**RSP**	1
79	69901-0203	69901-0203	External Retaining Ring		2

**Components for 240Volt Version

Item	Order No.	Description	RSP / PP Parts and notes	Quantity
1	62500-0113	Power Cord (240V)		1
2	69018-5021	240V AC 50 Hz Motor		1
3	69018-6238	Light Bulb (240V) 25 Watt	**RSP**	1
4	69018-6239	Fuse (5.0 – AMP)	**RSP**	2

Hardware

Item	Description	Required
1	1/8 by 1/2Long Dowel Pin	2
2	3/8 by 3/8Long BSP Plug	1
3	5mm by 35 Long Spiral Pin	1
4	6mm by 16Long Shoulder Screw	3
5	M10 by 16Long BHCS	4
6	M10 by 16Long SHCS	2
7	M3 Hex Nut - Full	2
8	M3 by 10Long FHCS	2
9	M3 by 10Long Roll Pin	1
10	M3 by 20Long Spiral Pin	1
11	M3 by 25Long Dowel Pin	1
12	M3 by 35Long SHCS	1
13	M3 by 6Long SHCS	1
14	M4 Hex Nut	2
15	M4 by 10Long Set Screw	1
16	M4 by 12Long SHCS	4
17	M4 by 30Long SHCS	2
18	M4 by 8Long BHCS	4
19	M4 by 8Long Set Screw	3
20	M5 by 10Long BHCS	6
21	M5 by 10Long FHCS	1
22	M5 by 10Long SHCS	2
23	M5 by 12Long BHCS	2
24	M5 by 16Long SHCS	1
25	M5 by 20Long BHCS	1
26	M5 by 20Long SHCS	4
27	M6 Hex Nut - Full	2
28	M6 Jam Nut	1
29	M6 by 10Long BHCS	4
30	M6 by 12Long BHCS	1
31	M6 by 12Long Set Screw	5
32	M6 by 16Long Dowel Pin	1
33	M6 by 16Long FHCS	4
34	M6 by 20Long Dowel Pin	1
35	M6 by 25Long BHCS	1
36	M6 by 40Long Set Screw	1
37	M6 by 30Long Set Screw	1
38	M6 by 60Long Set Screw	1
39	M6 by 40Long SHCS	3
40	M8 Flat Washer	8
41	M8 Hex Nut - Full	8
42	M8 by 12Long BHCS	8
43	M8 by 25Long SHCS	4
44	M8 by 50Long Stud	4
45	Pop Rivet – 1/8” Aluminum	9
Available from an industrial supply company such as MSC (1-800-645-7270).		

5.2 Assembly Drawings

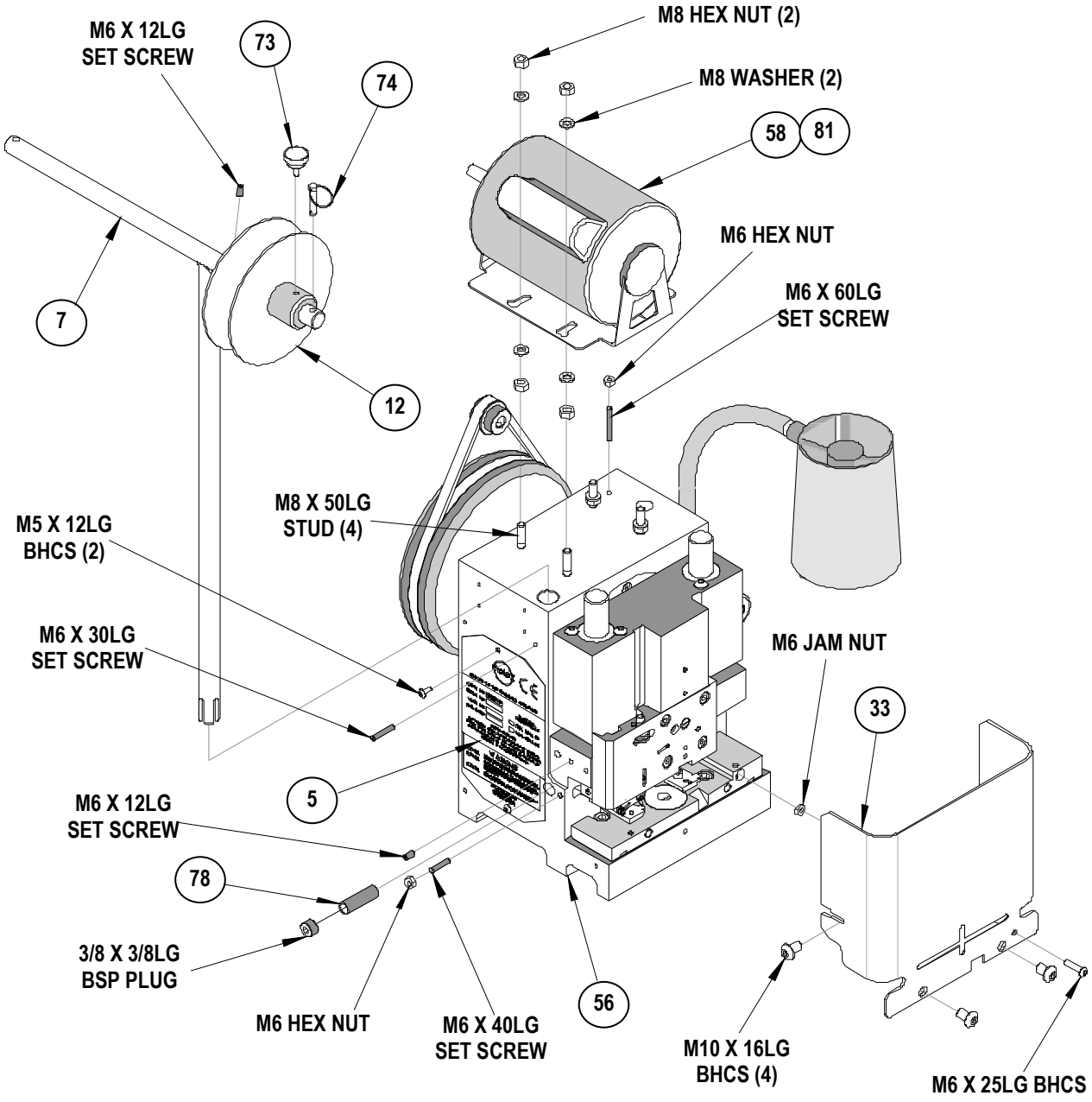

Figure 5-1

5.2 Assembly Drawings (continued)

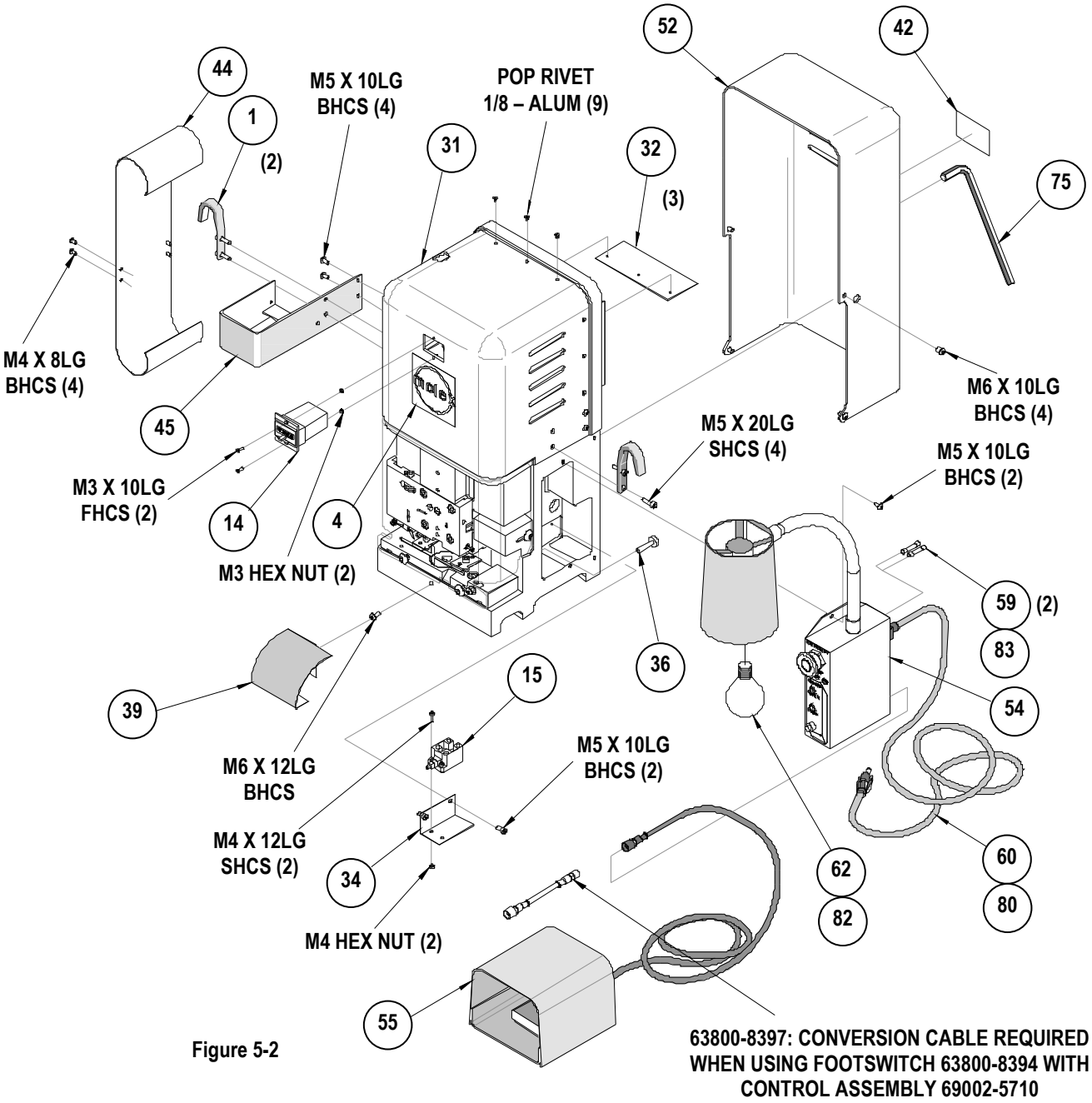

Figure 5-2

5.2 Assembly Drawings (continued)

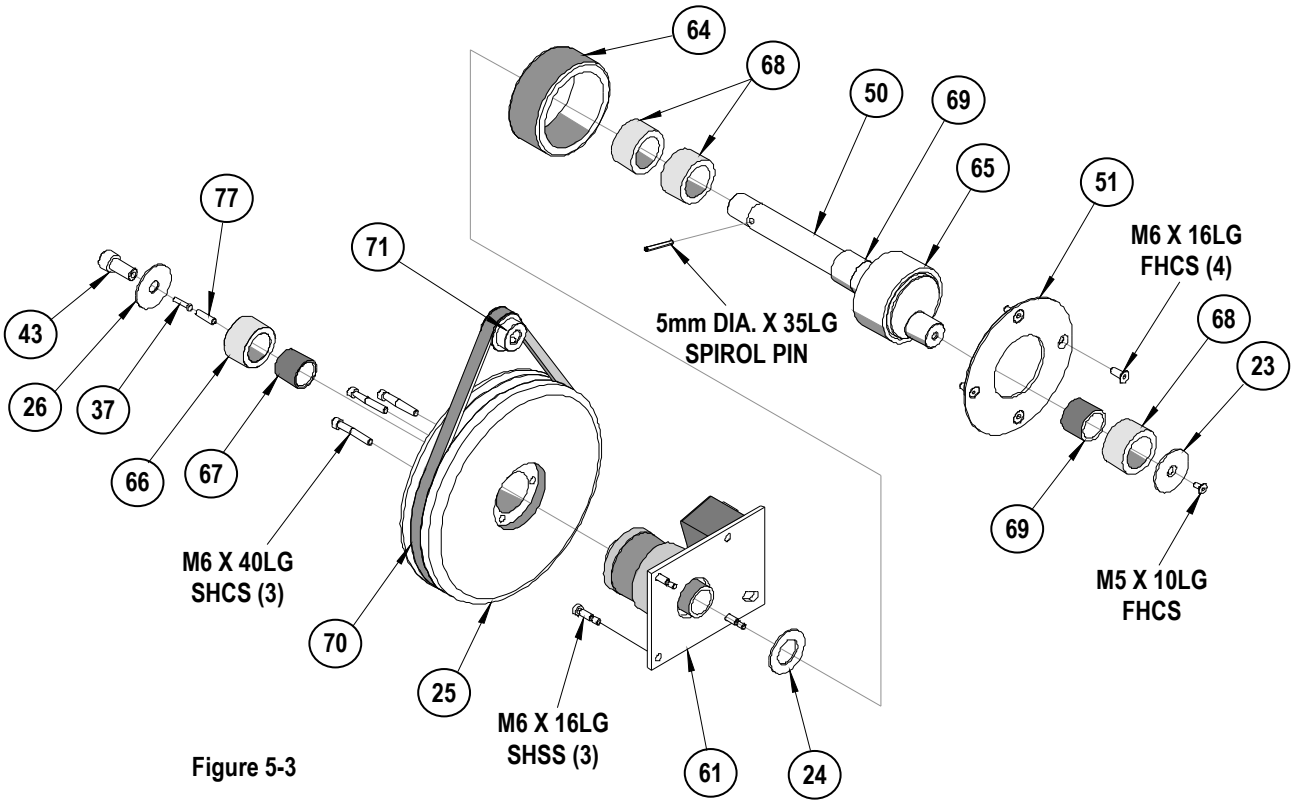

Figure 5-3

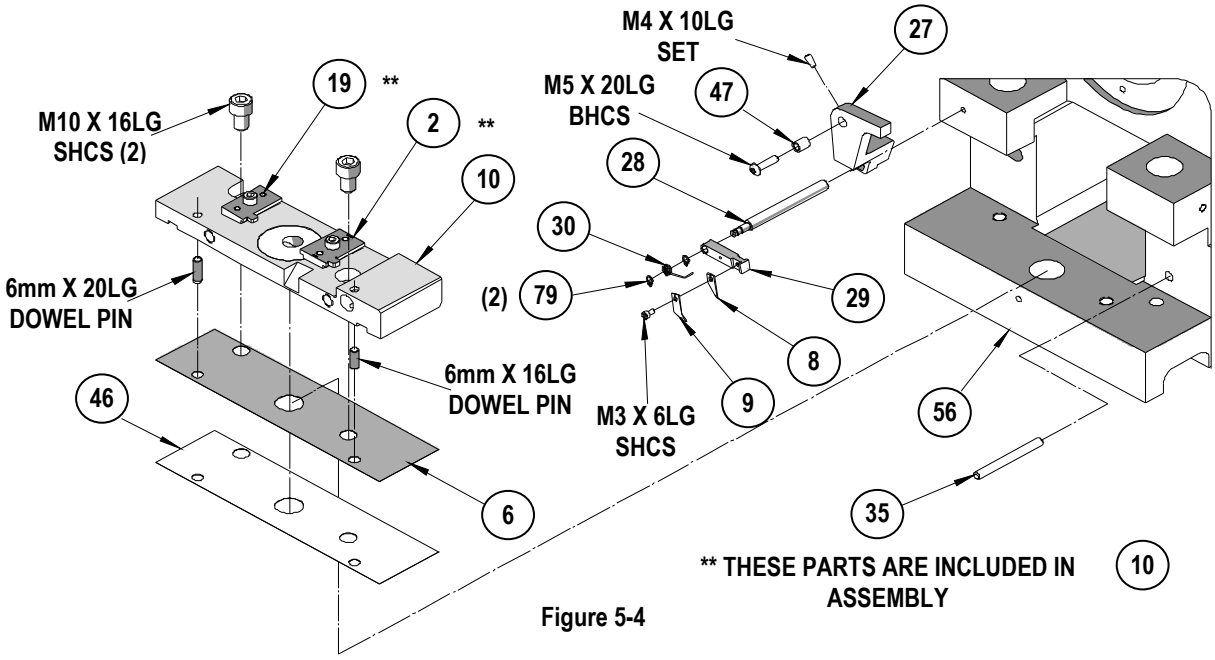

Figure 5-4

5.2 Assembly Drawings (continued)

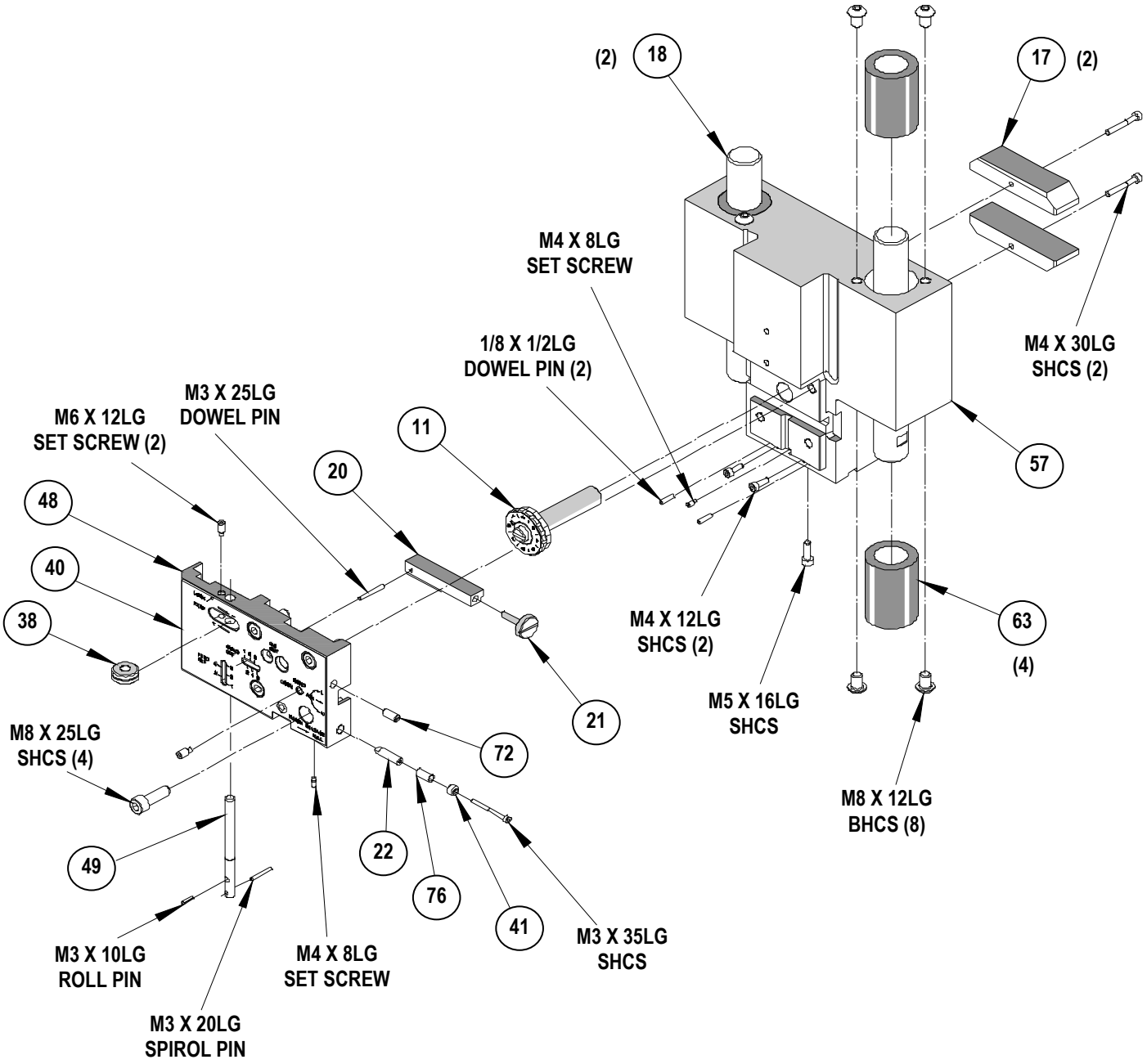

Figure 5-5

5.3 Electrcal Parts List

Item No.	Order No.	Engineering No.	Description	Quantity
1	63800-4210	63800-4210	Controls Assembly (TM-42)	REF
2	69002-5712	69002-5712	Control PCB Assembly	1
3	69018-6271	69018-6271	120V 25 Watt Bulb	1
4	69018-6238	69018-6238	240V 50 Watt Bulb	1
5	69018-5044	69018-5044	120V 1/3 HP Motor	1
6	69018-5021	69018-5021	240V 1/3 HP Motor	1
7	69018-6240	69018-6240	24V Clutch Soleniod	1
8	69002-5074	69002-5074	Counter Assembly (Resetable with Leads)	1
9	63800-8394	63800-8394	Foot Switch Assembly	1
10	69018-6239	69018-6239	5 Amp (240V) 5 x 20mm SB Fuse	2
11	69018-6219	69018-6219	8 Amp (120V) 5 x 20mm SB Fuse	2
12	69018-6237	69018-6237	Power Cord 120V - 9'-10", 16 AWG	1
13	69018-6251	69018-6251	Guard Open Red LED Assembly	1
14	69018-6052	69018-6052	Guard Switch	1
15	63800-4213	63800-4213	Jumper Wire Assembly (Remote E-Stop)	1
16	69002-5073	69002-5073	Harness Assembly	1
17	69018-6223	69018-6223	E-Stop Button Assembly	1
18	69018-6222	69018-6222	Run Button Assembly	1
19	69018-6252	69018-6252	Run Green LED Assembly	1
20	69018-6226	69018-6226	Transformer 10VA 24 VCT	1
21	69018-6231	69018-6231	Diode	7
22	69018-6227	69018-6227	Positive Adjustable Regulator	1
23	69018-6234	69018-6234	Resistor 221 Ohm 1/10W 1%	1
24	69018-6235	69018-6235	Resistor 5.11K Ohm 1/4W 1%	1
25	69018-6233	69018-6233	Capacitor 1200MFD 35V	1
26	69018-6228	69018-6228	Counter - 7 Digit (Non-Resetable)	1
27	69018-6242	69018-6242	Relay 3PDT	1
28	69002-5713	69002-5713	Blank-PCB	1
29	69002-5534	69002-5534	Enclosure - Control Assembly	1
30	69018-6221	69018-6221	Power Voltage Selector (115/230VAC)	1
31	69018-6220	69018-6220	Power Entry Module	1
32	11-32-2733	AM63190-E207	Fuse Drawer (2-Pole)	1
33	62500-1055	62500-1055	Micro –DC Series (4-Pin) (Female)	1
34	69018-6230	69018-6230	Relay Hold Down Spring	1
35	69018-6229	69018-6229	Relay Socket - PCB	1
37	69018-6232	69018-6232	Metal Oxide Varistor	1
39	63800-4216	63800-4216	Power Entry Sub-Assembly	1
40	69018-6262	69018-6262	Ground Wire Assembly	1
43	62500-0113	62500-0113	Power Cord 240V (International)	1
44	62500-1613	62500-1613	Ferrite Core	1
51	62500-1615	62500-1615	Work Lamp Assembly	1
52	63800-4214	63800-4214	Foot Switch Connector Assembly	1

5.3 Electrcal Schematic

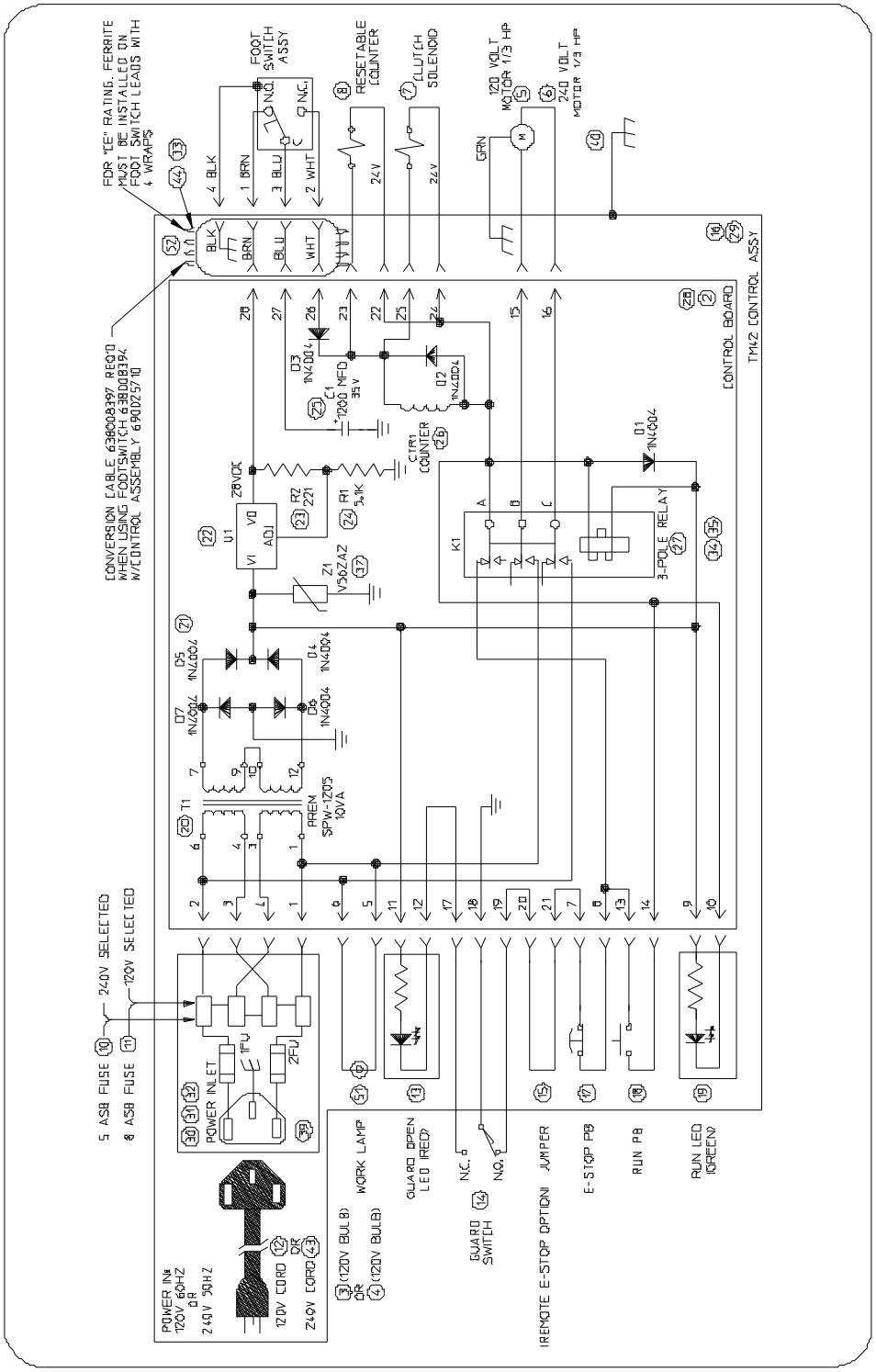

TM42 ELECTRICAL SCHEMATIC

5.4 Troubleshooting

Symptom	▪ Cause	Solution
Motor will not run.	▪ Power/Power cord failure.	Check power supply.
	▪ Loose connection.	Refer to control schematic.
	▪ Power cord not properly plugged ▪ in or cord damaged.	Check condition of cord and repair or replace as required. Check to be sure it is securely plugged in on both ends.
	▪ Guard interlock switch disengaged.	Install guard.
	▪ Fuse blown.	Replace
	▪ On/Off switch failure.	Replace
	▪ Motor thermal overload. ▪ Belt too tight.	Push reset button on motor. Adjust motor mount.
	▪ Motor Failure.	Replace
Flywheel fails to rotate (motor runs).	▪ Belt slipping/broken.	Adjust/Replace
	▪ Drive pulley loose.	Tighten
Flywheel rotates press will not cycle.	▪ Loose electrical connection.	Refer to control schematic and repair.
	▪ Foot switch connection.	Check/Replace.
	▪ Faulty Foot switcg	Check connection/Replace.
	▪ Faulty counter.	Check connection/Replace.
	▪ Clutch/Solenoid failure.	See Section 4.5
	▪ Press Control Assembly failure.	Unplug counter.
Excessive clutch noise.	▪ Out of adjustment	See Section 4.5.
	▪ Clutch component failure	Adjust/Replace.
Press double/multi-cycles.	▪ Solenoid sticks	Check/Replace. See Section 4.5.
	▪ Shorted leads in foot switch.	Replace
	▪ Broken clutch screw	Check/Replace.
No termnial feed.	▪ Spirol pin broken.	Replace. See Ram assembly in Section 5.
Ram drops from top dead center.	▪ Broken clutch pin.	Check/Replace.
	▪ Faulty clutch spring.	Check/Replace
Broken tooling	▪ Improper tooling installation.	Replace and refer to Section 2. Make necessary corrections.

For more information use the Quality Crimping Handbook (Order No. 63800-0029)

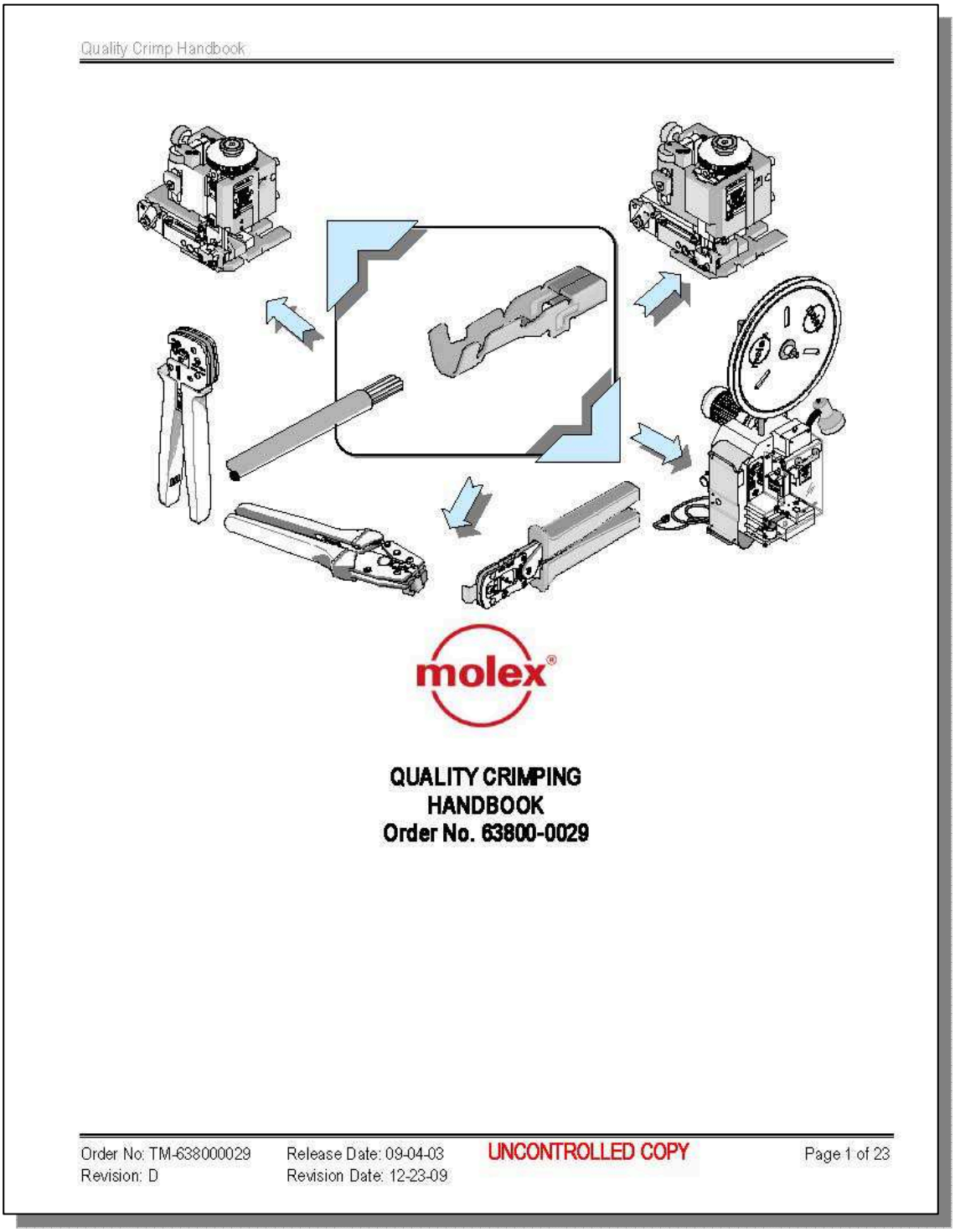
Quality Crimp Handbook

QUALITY CRIMPING
HANDBOOK
Order No. 63800-0029

Order No: TM-638000029 Release Date: 09-04-03 UNCONTROLLED COPY Page 1 of 23
Revision: D Revision Date: 12-23-09

Appendix A

Crimp Terminations

A.1 Conductor Brush and Terminal Position

A.2 Conductor Bell mouth and Terminal Cut-off Tab

A.3 Conductor Crimp Height Measurement

A.4 Insulation Crimp

A.5 Pull Force Testing

A.6 EC Declaration of Conformity

Terminal Terminology

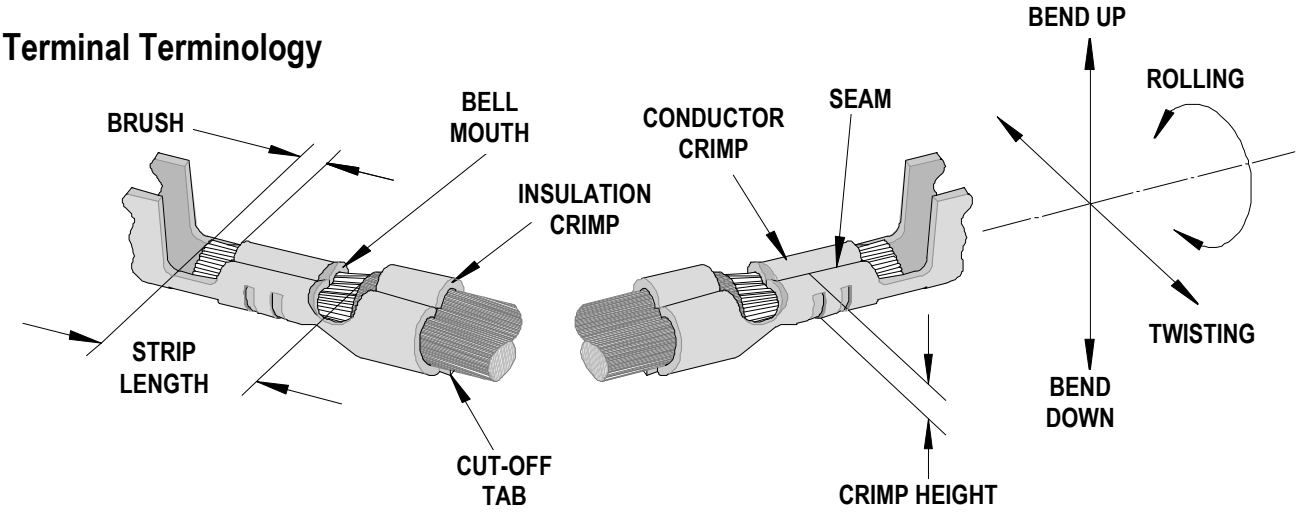

A.1 Conductor Brush and Terminal Position

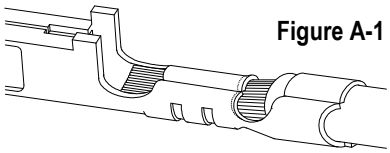 Figure A-1	**A-1 Optimum Crimp Setup** The insulation edge should be centered in the middle of the transition area. The conductor brush should extend past the conductor crimp and not extend into the contact area.
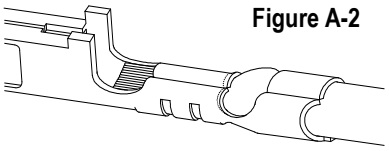 Figure A-2	**A-2 Insulation Under Conductor Crimp Good Conductor Brush Length** **Cause:** Strip length too short. **Solution:** Verify strip length specification and adjust as necessary.
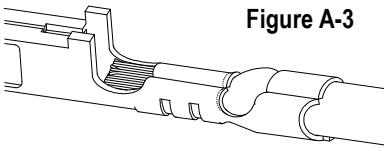 Figure A-3	**A-3 Insulation Under Conductor Crimp, Long Conductor Brush Length** **Cause:** Wire stop position incorrect. **Solution:** Adjust wire stop to center theinsulation in the transition area.
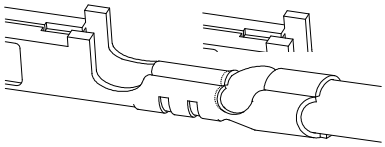	**A-4 Insulation Under Conductor Crimp, Short or No Conductor Brush Length** **Cause:** 1) Strip length too short and 2) Wire stop position incorrect. **Solution:** 1) Verify strip length specification and adjust as necessary. 2) Adjust wire stop to center the insulation in the transition area.
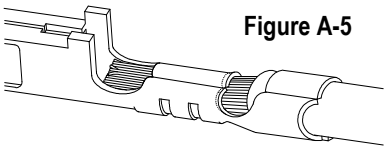 Figure A-5	**A-5 Insulation Edge Centered in the Transition Area, Conductor Brush Too Long** **Cause:** 1) Strip length too long. 2) Irregular wire cut-off or wire strands pulled from insulation bundle. **Solution:** 1) Verify strip length specification and adjust as necessary. Readjust wire stop for bench applications 2) Check for worn stripping blades
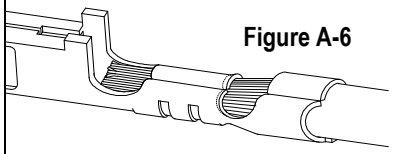 Figure A-6	**A-6 Insulation Edge in the Center of Transition Area, Conductor Brush Too Short** **Cause:** Strip length too short. **Solution:** Verify strip length specification and adjust as necessary. Readjust wire stop for bench applications.

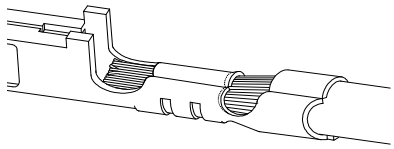	**A-7 Insulation Edge Under Insulation Crimp Form, Good or ong Conductor Brush Length** **Cause:** Strip length too long. **Solution:** Verify strip length specification and adjust as necessary. Adjust the wire stop.
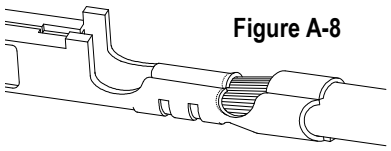 Figure A-8	**A-8 Insulation Edge Under Insulation Crimp Form, Short or No Conductor Brush Length** **Cause:** 1) Wire stop position incorrect. 2) Verify operator's placement ability, or crimp rate. **Solution:** 1) Adjust the wire stop to center the insulation in the transition area. 2) Operator training, reduce crimping rate.

A.2 Conductor Bell Mouth and Terminal Cutoff Tab

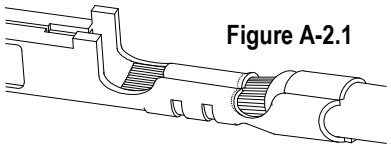 Figure A-2.1	**A-2.1 Optimum Crimp Setup** Tooling was set up to produce conductor bell mouth to nominal specification and/or approximately 1x to 2x terminal material thickness. The cutoff tab is approximately 1x terminal material thickness.
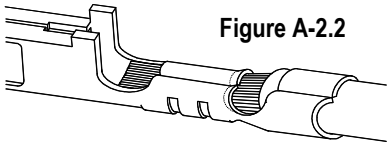 Figure A-2.2	**A-2.2 Excessive Bell mouth, Cutoff Tab Flush With Insulation Crimp** **Cause:** 1) Terminal tooling position. 2) Camber in the terminal strip. **Solution:** 1) Verify pull force. 2) Adjust terminal track into the applicator.
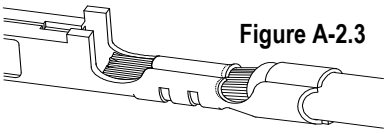 Figure A-2.3	**A-2.3 No or Small Bell mouth, Long Cutoff Tab** **Cause:** 1) Terminal to tooling position. 2) Camber in the terminal strip. **Solution:** 1) Verify pull force. 2) Adjust terminal track towards operator.
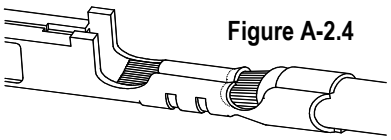 Figure A-2.4	**A-2.4 Excessive Bell mouth, Good Cutoff Tab** **Cause:** 1) Check for worn conductor punch tooling. 2) Check for correct conductor punch tooling. **Solution:** Replace tooling if necessary
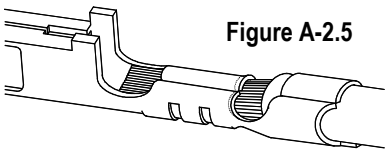 Figure A-2.5	**A-2.5 Excessive Cutoff Tab, Good Conductor Bell mouth** **Cause:** 1) Check for worn cutoff tooling. 2) Check for correct cutoff tooling. **Solution:** Replace tooling if necessary.

A.3 Crimp Height Measurement

NOTE: Conductor height should be measured with a blade type micrometer or a caliper.

CAUTION: Care must be taken not to measure the extrusions

A.3.1 Crimp height off target

Cause: 1) Changed wire type, stranding or vendor.
2) Changed insulation color or durometer.
3) Changed crimp tooling.
4) Changed crimping press.(Shut-height)
5) Changed press type. (Manufacturer)
6) Changed terminal reel. (Lot code)
7) Changed tooling set-up.
8) Damaged or worn tooling.

Solution: Adjust tooling back to target
(Refer to Section 2.8 and 2.9)

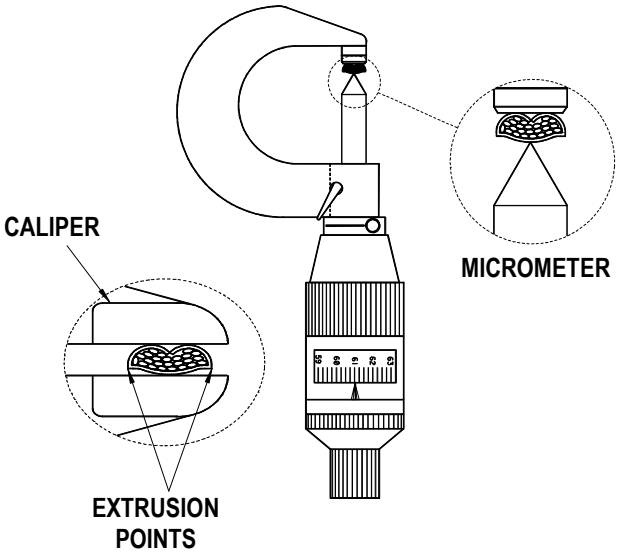

Figure A-3.1
CRIMP HEIGHT MEASUREMENT

A.3.2 Crimp height variability too high

Cause: 1) Wire variability.
2) Terminal variability.
3) Damaged, loose, or worn tooling.
4) Measurement error *.
5) Terminal spring back too great **.
6) Cut or missing wire strands.

Solution: 1 or 2) Inspect incoming product for variability.
3) Tooling replacement or tightening.
4) Gauge capability analysis.
5) Tooling crimp height adjustment.
6) Stripping process adjustment.

* Most common cause of crimp height variability

A.4 Insulation Crimp

A.4.1 Preferred Insulation Crimp

It is preferred that the insulation crimp completely surrounds the outside diameter of the insulation. The terminal should hold on to the wire as firmly as possible without cutting through to the conductor strands. It should be noted that a preferred crimp only occurs in a small portion of the full insulation range a terminal can accommodate. A preferred insulation crimp is recommended for high vibration or movement applications.

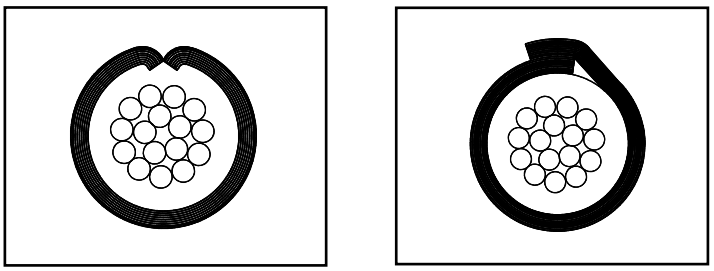

Figure A-4.1 Preferred Insulation Crimp

An overlap insulation crimp is normally only developed for high vibration or movement applications where the wire diameter is near the lower terminal specification limit.

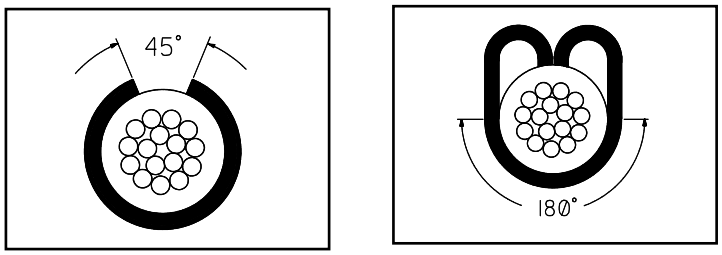

Figure A-4.2 Acceptable Insulation Crimp

A.4.2 Acceptable Insulation Crimp

A terminal is normally specified to cover a wide range of insulation wall thickness over a range of wire sizes. Within this specified range, an insulation crimp may not completely surround the wire or fully hold the full diameter of the wire. This condition will still give an acceptable insulation crimp for most applications.

a) A large insulation crimp should firmly grip at least 88% of the wire.
b) A smaller insulation crimp should firmly grip at least 50% of the wire and firmly hold the top of the wire.

A.4.3 Marginal Insulation Crimp

An insulation diameter near the maximum and minimum specification of a terminal may cover less than what is normally considered acceptable. These strain reliefs should only be used on applications that have low vibration or movement.

a) An insulation crimp that covers less than 88% of a large insulation diameter.

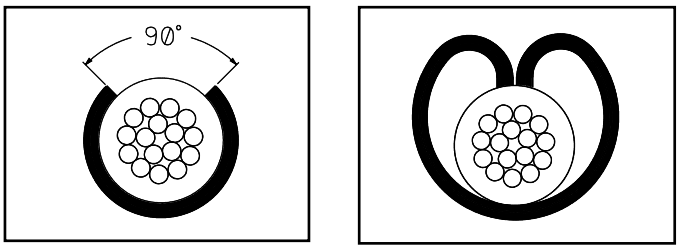

Figure A-4.3 Marginal Insulation Crimp

Cause: Not enough terminal grip length.
Solution: 1) Evaluate if the same terminal is available in a different wire range.
2) Try crimping the wire one setting tighter. This will embed the terminal more into the insulation. The insulation wall thickness is normally enough; therefore cutting strands is not a worry. Terminal insulation grips kicking back away from the terminal or slight insulation bulging may be noticed. Evaluate the terminal loaded into a housing for acceptability

b) An insulation crimp that covers less than 50% of a small insulation diameter.

Cause: Too much terminal grip.
Solution: 1) Find out if the same terminal is available in a different wire range.
2) Find out if overlap crimp tooling is available.

A.4.4 Marginal Insulation Crimp

For insulation diameters that are small, thin-walled insulated wire. A loose crimp ensures no strand damage and offers insulation containment. Insulation crimps that pierce through the insulation will offer more strain relief. In some cases insulation terminal grips will push the strands to the side. Yet, there is always the possibility that a wire strand could be nicked. In severe cases, a wire strand may be cut. Careful application evaluation is needed for both of these cases.

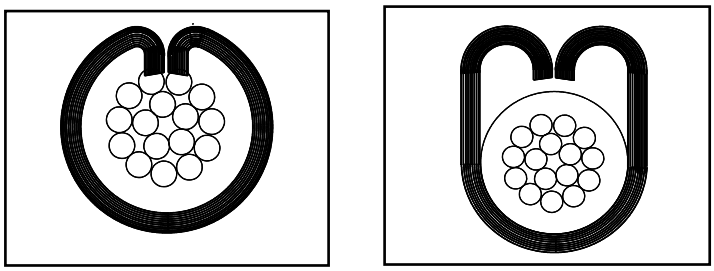

Figure A-4.4 Marginal Insulation Crimp

Cause: 1) Crimp tooling adjustment.
2) Wire diameter variability.

A.5 Pull Force Testing

A.5.1 Pull Force Procedure

Wire connectors and soldering lugs for use with copper conductors. (Per UL486A October 8, 1991) UL Section 12 Pullout Test.

12.1 The connectors subjected to the static heating test or secureness test shall be subjected to a direct pull of the value specified for one minute. Only those conductors that have been subjected to the secureness test are to be subjected to the pullout test. The connector is acceptable if it does not become separated from the conductor or conductors after completion of the test.

12.2 For an insulated connector in which the insulation is assembled to the connector during installation, the test should be conducted with the insulation in place if it is always supplied with the connector by the manufacturer. Otherwise, the test should be conducted without the insulation assembled to the connector. Breaking or tearing of the insulation of an insulated connector is acceptable in the pullout test. The pull is to be exerted by means of a tension testing machine or equivalent, so that there will be no sudden application of force or jerking during the test.

The following is the procedure Molex uses for the qualification of pull force:

1. Cut wire length approximately 150mm (6.0”) long.
2. Strip one end to 13mm (.50”), or long enough so no wire insulation is under the insulation grip.
3. Terminate the appropriate terminal to the wire to the nominal crimp height.
4. Visually inspect the termination for bell mouth, wire brush and cut strands.
5. Set pull tester to 25.4mm (1.0”.) per minute. For most applications, a higher rate will not have a significant impact on the data. Verify higher pull rates with data taken at 25.4mm (1.0”.) per minute.
6. Knot the non-terminated end of the wire.
7. Regardless of pull tester type, both wire and terminated end must be securely clamped. (Note: If Clamp terminal contact interface, do not clamp conductor crimp.)
8. Activate pull test.
9. Record a minimum of 25 readings of maximum pull force. After the application has been qualified, a minimum of 5 pull force measurements should be done to confirm each setup.
10. Compare lowest reading to minimum pull force specification.

Test Values For Pullout Test UL486A			
Conductor Size		Pullout Force	
AWG	mm^2	N	LB
30	0.05	6.7	1.5
28	0.08	8.9	2
26	0.13	13.4	3
24	0.20	22.3	5
22	0.324	35.6	8
20	0.519	57.9	13
18	0.823	89.0	20
16	1.31	133.5	30
14	2.08	222.6	50
12	3.31	311.5	70
10	5.261	356.0	80
9	8.367	400.5	90

A.5.2 Pull Test Problems

A.5.2.1 Wire breaks before conductor grip pull force low

Material Evaluation

Cause: Wire material properties, and/or coatings.

Solution: Test non-terminated wire for breaking strength.

Stripping Evaluation

Cause: Cut or nicked strands from stripping operation.
1) Wire being manually stripped.
2) Poor automatic stripping cutoff.
3) Worn strip tooling.

Solution: 1) Switch to semiautomatic or automatic wire stripping machine.
2) Correct stripping machine setup.

A.5.2.2 Wire pulls out of conductor grip, crimp height good

Material Evaluation

Cause: 1) Terminal material thickness too small.
2) Terminal serration depth/form.
3) Terminal plating thickness.
4) Gold plating application.

Solution: 1) Evaluate a new terminal.
2) Or 3) Contact terminal manufacturer.
4) Evaluate selective Gold application.

Stripping Evaluation

Cause: Wrong strip length, poor conductor brush.

Solution: Adjust strip length.

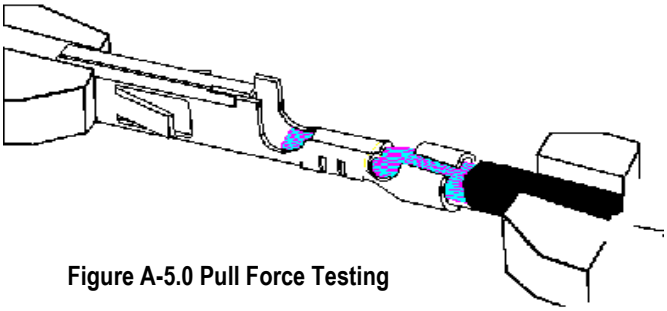

Figure A-5.0 Pull Force Testing

Appendix B

Options

EC Declaration of Conformity

We hereby declare that the following product is in conformity with the requirements of the following EC Directives:

Product: **TM42 Crimp Machine**
Type: **69002-5001, 69002-5000**
Title and No. of Directive: **EMC Directive 89/336/EEC, 92/31/EEC**
Machine Directive 89/392/EEC

This product is designed and manufactured in accordance with the following standards:

EMC:

EMI (Electromagnetic Interface): EN50081-1
Conducted/Radiated: EN 55011 level B
EMS (Electromagnetic Susceptibility):
Immunity EN 50082-1 EN 50082-2

Electrical Safety: EN 292-1:1991/ EN 292-2:1991/EN 60204-1:1993

Manufacturer:

Name: **Molex Application Tooling Group**
Address: **2200 Wellington Court**
Lisle, IL 60532 USA
Date: **April 4 1996**

Signed: _____
Typed Name:
Title: Director of Engineering

Representative in EU:

Name: **Molex Interconnect AG**
Address: **Luchthavenweg 38**
5657 EB Eindhoven,
The Netherlands

Visit our Website at http://www.molex.com