TMS320C6655 and TMS320C6657 Fixed and Floating-Point Digital Signal Processor

1 Device Overview

1.1 Features

- One (C6655) or Two (C6657) TMS320C66x™ DSP Core Subsystems (CorePacs), Each With
  - 850 MHz (C6657 only), 1.0 GHz, or 1.25 GHz C66x Fixed- and Floating-Point CPU Core
    - 40 GMAC per Core for Fixed Point @ 1.25 GHz
    - 20 GFLOP per Core for Floating Point @ 1.25 GHz
- Multicore Shared Memory Controller (MSMC)
  - 1024KB MSM SRAM Memory (Shared by Two DSP C66x CorePacs for C6657)
  - Memory Protection Unit for Both MSM SRAM and DDR3_EMIF
- Multicore Navigator
  - 8192 Multipurpose Hardware Queues with Queue Manager
  - Packet-Based DMA for Zero-Overhead Transfers
- Hardware Accelerators
  - Two Viterbi Coprocessors
  - One Turbo Coprocessor Decoder
- Peripherals
  - Four Lanes of SRIO 2.1
    - 1.24, 2.5, 3.125, and 5 GBaud Operation Supported Per Lane
    - Supports Direct I/O, Message Passing
    - Supports Four 1×, Two 2×, One 4×, and Two 1× + One 2× Link Configurations
  - PCIe Gen2
    - Single Port Supporting 1 or 2 Lanes
    - Supports up to 5 GBaud Per Lane
  - HyperLink
    - Supports Connections to Other KeyStone Architecture Devices Providing Resource Scalability
    - Supports up to 40 Gbaud
  - Gigabit Ethernet (GbE) Subsystem
    - One SGMII Port
    - Supports 10-, 100-, and 1000-Mbps Operation
  - 32-Bit DDR3 Interface
    - DDR3-1333
    - 8GB of Addressable Memory Space
  - 16-Bit EMIF
  - Universal Parallel Port
    - Two Channels of 8 Bits or 16 Bits Each
    - Supports SDR and DDR Transfers
  - Two UART Interfaces
  - Two Multichannel Buffered Serial Ports (McBSPs)
  - I^2C Interface
  - 32 GPIO Pins
  - SPI Interface
  - Semaphore Module
  - Eight 64-Bit Timers
  - Two On-Chip PLLs
- Commercial Temperature:
  - 0°C to 85°C
- Extended Temperature:
  - –40°C to 100°C

1.2 Applications

- Power Protection Systems
- Avionics and Defense
- Currency Inspection and Machine Vision
- Medical Imaging
- Other Embedded Systems
- Industrial Transportation Systems

1.3 Description

The C665x are high performance fixed- and floating-point DSPs that are based on TI's KeyStone multicore architecture. Incorporating the new and innovative C66x DSP core, this device can run at a core speed of up to 1.25 GHz. For developers of a broad range of applications, both C665x DSPs enable a platform that is power-efficient and easy to use. In addition, the C665x DSPs are fully backward compatible with all existing C6000™ family of fixed- and floating-point DSPs.

An IMPORTANT NOTICE at the end of this data sheet addresses availability, warranty, changes, use in safety-critical applications, intellectual property matters and other important disclaimers. PRODUCTION DATA.

TI's KeyStone architecture provides a programmable platform integrating various subsystems (C66x cores, memory subsystem, peripherals, and accelerators) and uses several innovative components and techniques to maximize intradevice and interdevice communication that lets the various DSP resources operate efficiently and seamlessly. Central to this architecture are key components such as Multicore Navigator that allows for efficient data management between the various device components. The TeraNet is a nonblocking switch fabric enabling fast and contention-free internal data movement. The multicore shared memory controller allows access to shared and external memory directly without drawing from switch fabric capacity.

For fixed-point use, the C66x core has 4× the multiply accumulate (MAC) capability of C64x+ cores. In addition, the C66x core integrates floating-point capability and the per-core raw computational performance is an industry-leading 40 GMACS per core and 20 GFLOPS per core (@1.25 GHz operating frequency). The C66x core can execute 8 single precision floating-point MAC operations per cycle and can perform double- and mixed-precision operations and is IEEE 754 compliant. The C66x core incorporates 90 new instructions (compared to the C64x+ core) targeted for floating-point and vector math oriented processing. These enhancements yield sizeable performance improvements in popular DSP kernels used in signal processing, mathematical, and image acquisition functions. The C66x core is backward code-compatible with TI's previous generation C6000 fixed- and floating-point DSP cores, ensuring software portability and shortened software development cycles for applications migrating to faster hardware.

The C665x DSP integrates a large amount of on-chip memory. In addition to 32KB of L1 program and data cache, 1024KB of dedicated memory can be configured as mapped RAM or cache. The device also integrates 1024KB of Multicore Shared Memory that can be used as a shared L2 SRAM and/or shared L3 SRAM. All L2 memories incorporate error detection and error correction. For fast access to external memory, this device includes a 32-bit DDR-3 external memory interface (EMIF) running at a rate of 1333 MHz and has ECC DRAM support.

This family supports a number of high-speed standard interfaces including RapidIO ver 2, PCI Express Gen2, and Gigabit Ethernet. This family of DSPs also includes I^2C, UART, Multichannel Buffered Serial Port (McBSP), Universal Parallel Port (uPP), and a 16-bit asynchronous EMIF, along with general-purpose CMOS IO. For high throughput, low latency communication between devices or with an FPGA, a 40-Gbaud full-duplex interface called HyperLink is included.

The C665x devices have a complete set of development tools, which includes: an enhanced C compiler, an assembly optimizer to simplify programming and scheduling, and a Windows® debugger interface for visibility into source code execution.

TI's KeyStone Multicore Architecture provides a high performance structure for integrating RISC and DSP cores with application-specific coprocessors and I/O. The KeyStone architecture is the first of its kind that provides adequate internal bandwidth for nonblocking access to all processing cores, peripherals, coprocessors, and I/O. This internal bandwidth is achieved with four main hardware elements: Multicore Navigator, TeraNet, Multicore Shared Memory Controller, and HyperLink.

Multicore Navigator is an innovative packet-based manager that controls 8192 queues. When tasks are allocated to the queues, Multicore Navigator provides hardware-accelerated dispatch that directs tasks to the appropriate available hardware. The packet-based system on a chip (SoC) uses the two Tbps capacity of the TeraNet switched central resource to move packets. The Multicore Shared Memory Controller lets processing cores access shared memory directly without drawing from the capacity of TeraNet, so packet movement cannot be blocked by memory access.

HyperLink provides a 40-Gbaud chip-level interconnect that lets SoCs work in tandem. The low-protocol overhead and high throughput of HyperLink make an ideal interface for chip-to-chip interconnections. Working with Multicore Navigator, HyperLink dispatches tasks to tandem devices transparently and executes tasks as if they are running on local resources.

Copyright © 2012–2016, Texas Instruments Incorporated

Device Information(1)

PART NUMBER	PACKAGE	BODY SIZE
TMS320C6655	GZH (625)	21 mm × 21 mm
	CZH (625)	21 mm × 21 mm
TMS320C6657	GZH (625)	21 mm × 21 mm
	CZH (625)	21 mm × 21 mm

(1) For more information, see Section 11, *Mechanical Packaging and Orderable Information*.

Copyright © 2012–2016, Texas Instruments Incorporated

1.4 Functional Block Diagram

Figure 1-1 shows the functional block diagrams of the device.

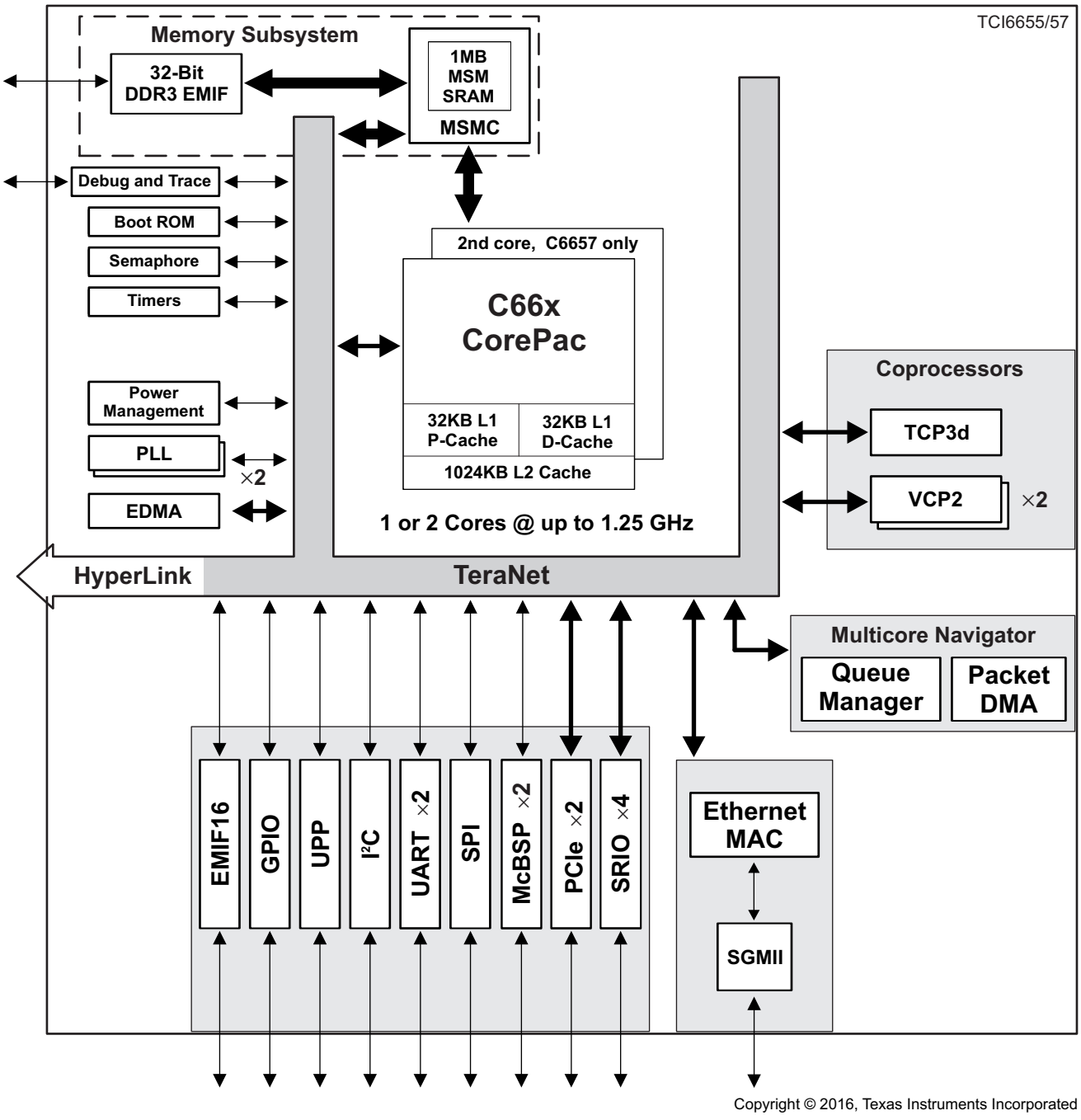

Figure 1-1. Functional Block Diagram

Copyright © 2012–2016, Texas Instruments Incorporated

Table of Contents

1 Device Overview 1
1.1 Features 1
1.2 Applications 1
1.3 Description 1
1.4 Functional Block Diagram 4
2 Revision History 6
3 Device Comparison 7
3.1 Device Comparison 7
4 Terminal Configuration and Functions 8
4.1 Pin Diagram 8
4.2 Terminal Functions 13
5 Specifications 35
5.1 Absolute Maximum Ratings 35
5.2 ESD Ratings 35
5.3 Recommended Operating Conditions 36
5.4 Power Consumption Summary 36
5.5 Electrical Characteristics 37
5.6 Thermal Resistance Characteristics for [CZH/GZH] Package 37
5.7 Timing and Switching Characteristics 38
6 Detailed Description 66
6.1 Recommended Clock and Control Signal Transition Behavior 66
6.2 Power Supplies 66
6.3 Power Supply to Peripheral I/O Mapping 67
6.4 Power Sleep Controller (PSC) 74
6.5 Reset Controller 78
6.6 Main PLL and PLL Controller 82
6.7 DDR3 PLL 96
6.8 Enhanced Direct Memory Access (EDMA3) Controller 98
6.9 Interrupts 102
6.10 Memory Protection Unit (MPU) 126
6.11 DDR3 Memory Controller 141
6.12 I^2C Peripheral 142
6.13 HyperLink Peripheral 144
6.14 PCIe Peripheral 146
6.15 Ethernet Media Access Controller (EMAC) 147
6.16 Management Data Input/Output (MDIO) 153
6.17 Timers 154
6.18 Semaphore2 154
6.19 Multichannel Buffered Serial Port (McBSP) 155
6.20 Universal Parallel Port (uPP) 156
6.21 Serial RapidIO (SRIO) Port 157
6.22 Turbo Decoder Coprocessor (TCP3d) 158
6.23 Enhanced Viterbi-Decoder Coprocessor (VCP2) 158
6.24 Emulation Features and Capability 158
6.25 DSP Core Description 159
6.26 Memory Map Summary 162
6.27 Boot Sequence 166
6.28 Boot Modes Supported and PLL Settings 167
6.29 PLL Boot Configuration Settings 191
6.30 Second-Level Bootloaders 191
7 C66x CorePac 192
7.1 Memory Architecture 193
7.2 Memory Protection 196
7.3 Bandwidth Management 197
7.4 Power-Down Control 197
7.5 C66x CorePac Revision 198
7.6 C66x CorePac Register Descriptions 198
8 Device Configuration 199
8.1 Device Configuration at Device Reset 199
8.2 Peripheral Selection After Device Reset 200
8.3 Device State Control Registers 200
8.4 Pullup and Pulldown Resistors 227
9 System Interconnect 228
9.1 Internal Buses and Switch Fabrics 228
9.2 Switch Fabric Connections Matrix 228
9.3 TeraNet Switch Fabric Connections 231
9.4 Bus Priorities 234
10 Device and Documentation Support 236
10.1 Device Nomenclature 236
10.2 Tools and Software 237
10.3 Documentation Support 238
10.4 Related Links 239
10.5 Community Resources 239
10.6 Trademarks 239
10.7 Electrostatic Discharge Caution 239
10.8 Glossary 239
11 Mechanical Packaging and Orderable Information 240
11.1 Packaging Information 240

Copyright © 2012–2016, Texas Instruments Incorporated

2 Revision History

NOTE: Page numbers for previous revisions may differ from page numbers in the current version.

Changes from April 24, 2015 to May 30, 2016	Page
• Updated/Changed reference for Byte Offset 8 in Table 6-78	180
• Updated/Changed Value 70 in Table 6-79 from "EMIF25" to "*EMIF16*"	180
• Updated/Changed Figure 6-39 title from "Boot Parameter Table Boot Mode Values" to "*Boot Parameter PLL Configuration Field*"	180

Copyright © 2012–2016, Texas Instruments Incorporated

3 Device Comparison

3.1 Device Comparison

Table 3-1. Characteristics of the C665x Processor

HARDWARE FEATURES		TMS320C6655	TMS320C6657
Peripheral	DDR3 Memory Controller (32-bit bus width) [1.5 V I/O] (clock source = DDRREFCLKN|P)	1	
	DDR3 Maximum Data Rate	1333	
	EDMA3 (64 independent channels) [DSP/3 clock rate]	1	
	High-speed 1×/2×/4× Serial RapidIO Port (four lanes)	1	
	PCIe (two lanes)	1	
	10/100/1000 Ethernet	1	
	Management Data Input/Output (MDIO)	1	
	HyperLink	1	
	EMIF16	1	
	McBSP	2	
	SPI	1	
	UART	2	
	uPP	1	
	I^2C	1	
	64-Bit Timers (configurable) (internal clock source = CPU/6 clock frequency)	8 (each configurable as two 32-bit timers)	
	General-Purpose Input/Output port (GPIO)	32	
Encoder/Decoder Coprocessors	VCP2 (clock source = CPU/3 clock frequency)	2	
	TCP3d (clock source = CPU/2 clock frequency)	1	
On-Chip Memory	CorePac Memory	32KB L1 Program Memory [SRAM/Cache] 32KB L1 Data Memory [SRAM/Cache] 1024KB L2 Unified Memory/Cache	
	ROM Memory	128KB L3 ROM	
	Multicore Shared Memory	1024KB MSM SRAM	
C66x CorePac Revision ID	CorePac Revision ID Register (address location: 0181 2000h)	See Section 7.5.	
JTAG BSDL_ID	JTAGID register (address location: 0262 0018h)	See Section 8.3.3.	
Frequency	MHz	1250 (1.25 GHz)	
Cycle Time	ns	0.8 (1.25 GHz)	
Extended Case Temp		–40ºC to 100ºC	–40ºC to 100ºC
Voltage	Core (V)	SmartReflex™ variable supply	
	I/O (V)	1.0 V, 1.5 V, and 1.8 V	
Process Technology	µm	0.040 µm	
BGA Package	21 mm × 21 mm, 0.80 mm pitch	625-Pin Flip-Chip Plastic BGA (CZH or GZH)	
Product Status(1)	Production Data (PD)	PD	PD

(1) PRODUCTION DATA information is current as of publication date. Products conform to specifications per the terms of Texas Instruments standard warranty. Production processing does not necessarily include testing of all parameters.

Copyright © 2012–2016, Texas Instruments Incorporated

4 Terminal Configuration and Functions

4.1 Pin Diagram

Figure 4-1 shows the C665x CZH and GZH ball grid area (BGA) packages (bottom view).

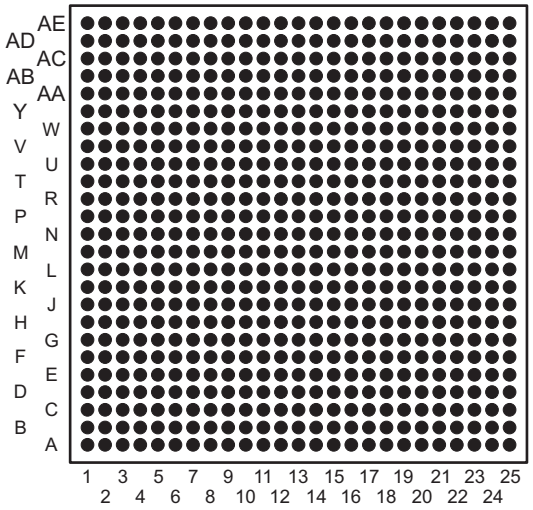

Figure 4-1. CZH and GZH 625-Pin BGA Package (Bottom View)

Figure 4-2 shows pin quadrants and Figure 4-3, Figure 4-4, Figure 4-5, and Figure 4-6 show the C665x pin assignments in four quadrants (A, B, C, and D).

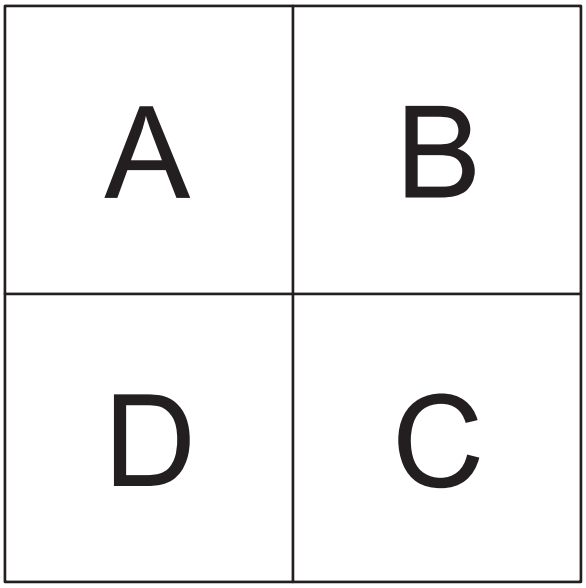

Figure 4-2. Pin Map Quadrants (Bottom View)

Copyright © 2012–2016, Texas Instruments Incorporated

	1	2	3	4	5	6	7	8	9	10	11	12	13
AE	VSS	SGMII0 RXN	SGMII0 RXP	VSS	RIORXN2	RIORXP2	VSS	RIORXP0	RIORXN0	VSS	PCIERXP0	PCIERXN0	VSS
AD	VSS	VSS	VSS	RIORXN3	RIORXP3	VSS	RIORXP1	RIORXN1	VSS	PCIERXN1	PCIERXP1	VSS	RSV28
AC	VSS	SGMII0 TXN	SGMII0 TXP	VSS	RIOTXN2	RIOTXP2	VSS	RIOTXP0	RIOTXN0	VSS	PCIETXP0	PCIETXN0	VSS
AB	EMIFD14	VSS	RSV19	RIOTXN3	RIOTXP3	VSS	RIOTXN1	RIOTXP1	VSS	PCIETXP1	PCIETXN1	VSS	SPIDOUT
AA	EMIFD13	EMIFD15	VDDR3	VSS	VDDR4	VSS	RSV17	VSS	VDDR2	VSS	RSV18	SPISCS0	SPICLK
Y	EMIFD09	EMIFD11	DVDD18	RSV13	RSV12	VSS	VDDT2	VSS	VDDT2	VSS	VDDT2	VSS	DVDD18
W	EMIFD06	EMIFD08	VSS	EMIFD10	EMIFD12	DVDD18	VSS	VDDT2	VSS	VDDT2	VSS	VDDT2	VSS
V	EMIFD02	EMIFD03	EMIFD04	EMIFD05	EMIFD07	VSS	DVDD18	VSS	CVDD	VSS	CVDD	VSS	CVDD
U	EMIFA21	EMIFA22	EMIFA23	EMIFD00	EMIFD01	DVDD18	VSS	CVDD1	VSS	CVDD	VSS	CVDD	VSS
T	EMIFA19	VSS	DVDD18	EMIFA18	EMIFA20	VSS	DVDD18	VSS	CVDD1	VSS	CVDD	VSS	CVDD
R	EMIFA17	EMIFA16	EMIFA14	EMIFA15	EMIFA13	DVDD18	VSS	VSS	VSS	CVDD	VSS	CVDD	VSS
P	EMIFA12	EMIFA11	EMIFA09	EMIFA05	EMIFA03	VSS	DVDD18	VSS	CVDD	VSS	CVDD	VSS	CVDD
N	EMIFA10	EMIFA08	DVDD18	VSS	EMIF WAIT0	DVDD18	VSS	CVDD	VSS	CVDD	VSS	CVDD	VSS

A	

Figure 4-3. Upper Left Quadrant — A (Bottom View)

14	15	16	17	18	19	20	21	22	23	24	25	
RSV35	PCIECLKN	UARTCTS1	TDI	TMS	CORECLKN	TIMO1	TIMI1	DX1	FSX1	CLKX1	VSS	AE
PCIECLKP	UARTRTS1	VSS	TCK	CORECLKP	TDO	TIMI0	DR1	FSR1	CLKR1	FSR0	EMU16	AD
UARTRXD1	UARTTXD1	DVDD18	UARTCTS	RSV04	TIMO0	DVDD18	CLKS1	DX0	CLKS0	EMU17	EMU13	AC
SPIDIN	UARTRXD	MDIO	UARTRTS	RSV05	$\overline{\text{TRST}}$	VSS	DR0	EMU15	DVDD18	VSS	EMU12	AB
SPISCS1	UARTTXD	MDCLK	SCL	SDA	SYSCLK OUT	FSX0	CLKR0	RSV01	EMU14	EMU10	EMU11	AA
VSS	AVDDA1	VSS	DVDD18	$\overline{\text{POR}}$	RSV08	CLKX0	EMU18	EMU09	EMU07	EMU06	EMU05	Y
DVDD18	VSS	DVDD18	VSS	DVDD18	VSS	DVDD18	GPIO14	EMU08	EMU03	EMU04	EMU02	W
VSS	CVDD	VSS	CVDD	VSS	DVDD18	VSS	GPIO15	GPIO13	GPIO10	EMU00	EMU01	V
CVDD	VSS	CVDD	VSS	CVDD1	VSS	DVDD18	GPIO11	GPIO08	GPIO09	GPIO05	GPIO03	U
VSS	CVDD	VSS	CVDD1	VSS	DVDD18	VSS	GPIO12	GPIO06	GPIO04	DVDD18	GPIO00	T
CVDD	VSS	CVDD	VSS	CVDD	VSS	DVDD18	GPIO07	VSS	GPIO02	VSS	GPIO01	R
VSS	CVDD	VSS	CVDD	VSS	CVDD	VSS	VSS	MCMTXN0	VSS	MCMRXN0	VSS	P
CVDD	VSS	CVDD	VSS	CVDD	VSS	VDDT1	MCMTXN1	MCMTXP0	VSS	MCMRXP0	MCMRXP1	N

	B

Figure 4-4. Upper Right Quadrant—B (Bottom View)

Copyright © 2012–2016, Texas Instruments Incorporated

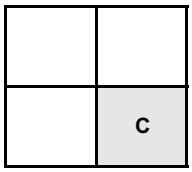

VSS	CVDD	VSS	CVDD	VSS	VDDT1	VDDR1	MCM TXP1	VSS	VSS	VSS	MCMRXN1	M
CVDD	VSS	CVDD	VSS	CVDD	VSS	VDDT1	VSS	MCMTXP2	VSS	MCMRXP3	VSS	L
VSS	CVDD	VSS	CVDD1	VSS	VDDT1	VSS	MCMTXP3	MCMTXN2	VSS	MCMRXN3	MCMRXP2	K
CVDD	VSS	CVDD	VSS	CVDD1	VSS	RSV16	MCMTXN3	VSS	VSS	VSS	MCMRXN2	J
VSS	CVDD	VSS	CVDD	VSS	DVDD18	VSS	VSS	RSV11	VSS	DVDD18	VSS	H
DVDD15	VSS	DVDD15	VSS	DVDD15	RSV0A	RSV0B	RSV15	RSV10	VCNTL3	MCMTX PMDAT	MCMREF CLKOUTP	G
VSS	PTV15	VSS	DVDD15	VSS	DVDD15	AVDDA2	RSV14	RSV20	VCNTL2	MCMTX PMCLK	MCMREF CLKOUTN	F
DDRODT0	DDRA03	DDRA02	DDRA15	DDRA14	DDRA10	DDRA09	DVDD18	VCNTL0	VCNTL1	MCMRX PMCLK	MCMTX FLCLK	E
$\overline{\text{DDRCAS}}$	DVDD15	DDRA00	DDRBA1	DDRA12	DVDD15	DDRA08	VSS	DDRSL RATE1	RSV21	MCMRX PMDAT	MCMTX FLDAT	D
$\overline{\text{DDRCE1}}$	VSS	DDRA06	DVDD15	DDRBA0	VSS	DDRA13	DVDD15	DDRSL RATE0	RSV09	MCMRX FLDAT	MCMCLKP	C
DDRCLK OUTN0	$\overline{\text{DDRCE0}}$	$\overline{\text{DDRRESET}}$	VSS	DDRA04	DDRBA2	DDRA11	DDRCLK OUTN1	DDRCLKN	RSV06	MCMRX FLCLK	MCMCLKN	B
DDRCLK OUTP0	$\overline{\text{DDRRAS}}$	DDRCKE0	DDRA05	DDRA07	DDRA01	DDRCKE1	DDRCLK OUTP1	DDRCLKP	RSV07	DVDD18	VSS	A
14	15	16	17	18	19	20	21	22	23	24	25	

Figure 4-5. Lower Right Quadrant—C (Bottom View)

D	

	1	2	3	4	5	6	7	8	9	10	11	12	13
M	EMIFA07	EMIFA06	EMIFA01	EMIFWAIT1	$\overline{\text{EMIFCE3}}$	VSS	DVDD18	VSS	CVDD	VSS	CVDD	VSS	CVDD
L	EMIFA04	EMIFA02	$\overline{\text{EMIFBE1}}$	$\overline{\text{EMIFOE}}$	EMIF RNW	DVDD18	VSS	CVDD	VSS	CVDD	VSS	CVDD	VSS
K	EMIFA00	VSS	DVDD18	$\overline{\text{EMIFWE}}$	$\overline{\text{EMIFCE0}}$	VSS	DVDD18	VSS	CVDD1	VSS	CVDD	VSS	CVDD
J	$\overline{\text{EMIFBE0}}$	$\overline{\text{EMIFCE2}}$	RSV02	$\overline{\text{RESETFULL}}$	CORESEL0	DVDD18	VSS	CVDD1	VSS	CVDD	VSS	CVDD	VSS
H	$\overline{\text{NMI}}$	RSV03	BOOT COMPLETE	$\overline{\text{RESET}}$	$\overline{\text{RESET}}$ STAT	VSS	DVDD18	VSS	CVDD	VSS	CVDD	VSS	CVDD
G	$\overline{\text{EMIFCE1}}$	HOUT	DVDD18	$\overline{\text{LRESET}}$	CORESEL1	DVDD18	VSS	DVDD15	VSS	DVDD15	VSS	DVDD15	VSS
F	$\overline{\text{LRESET}}$ NMIEN	DDRD25	VSS	DDRD18	DDRDQM2	VSS	DVDD15	VSS	DVDD15	VSS	DVDD15	VSS	DVDD15
E	DDRDQM3	DDRD24	DDRD31	DDRD19	DDRD16	DDRD08	DDR DQM1	DDRD09	DDRD04	DDRD05	VSS	VREFSSTL	$\overline{\text{DDRWE}}$
D	DDRD28	DVDD15	DDRD29	DVDD15	DDRD23	DDRD12	DDRD14	DVDD15	DDRD02	DDR DQS0P	DDRCB00	DDRODT1	DVDD15
C	DDRD27	VSS	DDRD30	VSS	DDRD22	DVDD15	DDRD13	VSS	DDRD01	DDR DQS0N	DDRCB02	DDRDQM8	VSS
B	DDRD26	DDR DQS3N	DDRD17	DDR DQS2P	DDRD21	VSS	DDR DQS1P	DDRD15	DDRD03	DVDD15	DDRD07	DDRCB01	DDR DQS8P
A	VSS	DDR DQS3P	DDRD20	DDR DQS2N	DDRD11	DDRD10	DDR DQS1N	DDR DQM0	DDRD00	VSS	DDRD06	DDRCB03	DDR DQS8N

Figure 4-6. Lower Left Quadrant—D (Bottom View)

Copyright © 2012–2016, Texas Instruments Incorporated

4.2 Terminal Functions

The terminal functions table (Table 4-2) identifies the external signal names, the associated pin (ball) numbers, the pin type (I, OZ, or IOZ), whether the pin has any internal pullup or pulldown resistors, and gives functional pin descriptions. Table 4-2 is arranged by function. The power terminal functions table (Table 4-3) lists the various power supply pins and ground pins and gives functional pin descriptions. Table 4-4 shows all pins arranged by signal name. Table 4-5 shows all pins arranged by ball number.

Seventy-three pins have a secondary function as well as a primary function. The secondary function is indicated with a dagger (†). One pin has a tertiary function as well as primary and secondary functions. The tertiary function is indicated with a double dagger (‡).

For more detailed information on device configuration, peripheral selection, multiplexed/shared pins, and pullup or pulldown resistors, see Section 8.4.

Use the symbol definitions in Table 4-1 when reading Table 4-2.

Table 4-1. I/O Functional Symbol Definitions

FUNCTIONAL SYMBOL	DEFINITION	Table 4-2 COLUMN HEADING
IPD or IPU	Internal 100-µA pulldown or pullup is provided for this terminal. In most systems, a 1-kΩ resistor can be used to oppose the IPD/IPU. For more detailed information on pulldown/pullup resistors and situations in which external pulldown/pullup resistors are required, see Hardware Design Guide for KeyStone Devices.	IPD/IPU
A	Analog signal	TYPE
GND	Ground	TYPE
I	Input terminal	TYPE
O	Output terminal	TYPE
S	Supply voltage	TYPE
Z	Tri-state terminal or high impedance	TYPE

Copyright © 2012–2016, Texas Instruments Incorporated

Table 4-2. Terminal Functions — Signals and Control by Function

SIGNAL NAME	BALL NO.	TYPE	IPD/IPU	DESCRIPTION
Boot Configuration Pins				
LENDIAN †	T25	IOZ	Up	Endian configuration pin (Pin shared with GPIO[0])
BOOTMODE00 †	R25	IOZ	Down	See Section 6.28 for more details (Pins shared with GPIO[1:13])
BOOTMODE01†	R23	IOZ	Down	
BOOTMODE02 †	U25	IOZ	Down	
BOOTMODE03 †	T23	IOZ	Down	
BOOTMODE04 †	U24	IOZ	Down	
BOOTMODE05 †	T22	IOZ	Down	
BOOTMODE06 †	R21	IOZ	Down	
BOOTMODE07 †	U22	IOZ	Down	
BOOTMODE08 †	U23	IOZ	Down	
BOOTMODE09 †	V23	IOZ	Down	
BOOTMODE10 †	U21	IOZ	Down	
BOOTMODE11 †	T21	IOZ	Down	
BOOTMODE12 †	V22	IOZ	Down	
PCIESSMODE0 †	W21	IOZ	Down	PCIe Mode selection pins (Pins shared with GPIO[14:15])
PCIESSMODE1 †	V21	IOZ	Down	
PCIESSEN ‡	AD20	I	Down	PCIe module enable (Pin shared with TIMI0 and GPIO16)
Clock / Reset				
CORECLKP	AD18	I		Core Clock Input to main PLL.
CORECLKN	AE19	I		
SRIOSGMIICLKP	AD13	I		RapidIO/SGMII Reference Clock to drive the RapidIO and SGMII SerDes
SRIOSGMIICLKN	AE14	I		
DDRCLKP	A22	I		DDR Reference Clock Input to DDR PLL
DDRCLKN	B22	I		
PCIECLKP	AD14	I		PCIe Clock Input to drive PCIe SerDes
PCIECLKN	AE15	I		
MCMCLKP	C25	I		HyperLink Reference Clock to drive the HyperLink SerDes
MCMCLKN	B25	I		
AVDDA1	Y15	P		SYS_CLK PLL Power Supply Pin
AVDDA2	F20	P		DDR_CLK PLL Power Supply Pin
SYSCLKOUT	AA19	OZ	Down	System Clock Output to be used as a general purpose output clock for debug purposes
HOUT	G2	OZ	Up	Interrupt output pulse created by IPCGRH
$\overline{\text{NMI}}$	H1	I	Up	Nonmaskable Interrupt
$\overline{\text{LRESET}}$	G4	I	Up	Warm Reset
$\overline{\text{LRESETNMIEN}}$	F1	I	Up	Enable for core selects
CORESEL0	J5	I	Down	Select for the target core for LRESET and NMI. For more details see Table 5-8.
CORESEL1	G5	I	Down	
$\overline{\text{RESETFULL}}$	J4	I	Up	Full Reset
$\overline{\text{RESET}}$	H4	I	Up	Warm Reset of non isolated portion on the IC
$\overline{\text{POR}}$	Y18	I		Power-on Reset
$\overline{\text{RESETSTAT}}$	H5	O	Up	Reset Status Output
BOOTCOMPLETE	H3	OZ	Down	Boot progress indication output
PTV15	F15	A		PTV Compensation NMOS Reference Input. A precision resistor placed between the PTV15 pin and ground is used to closely tune the output impedance of the DDR interface drivers to 50 Ω. Presently, the recommended value for this 1% resistor is 45.3 Ω.

Copyright © 2012–2016, Texas Instruments Incorporated

Table 4-2. Terminal Functions — Signals and Control by Function (continued)

SIGNAL NAME	BALL NO.	TYPE	IPD/IPU	DESCRIPTION
				DDR
DDRDQM0	A8	OZ		DDR EMIF Data Masks
DDRDQM1	E7	OZ		
DDRDQM2	F5	OZ		
DDRDQM3	E1	OZ		
DDRDQM8	C12	OZ		
DDRDQS0P	D10	IOZ		DDR EMIF Data Strobe
DDRDQS0N	C10	IOZ		
DDRDQS1P	B7	IOZ		
DDRDQS1N	A7	IOZ		
DDRDQS2P	B4	IOZ		
DDRDQS2N	A4	IOZ		
DDRDQS3P	A2	IOZ		
DDRDQS3N	B2	IOZ		
DDRDQS8P	B13	IOZ		
DDRDQS8N	A13	IOZ		
DDRCB00	D11	IOZ		DDR EMIF Check Bits
DDRCB01	B12	IOZ		
DDRCB02	C11	IOZ		
DDRCB03	A12	IOZ		
DDRD00	A9	IOZ		DDR EMIF Data Bus
DDRD01	C9	IOZ		
DDRD02	D9	IOZ		
DDRD03	B9	IOZ		
DDRD04	E9	IOZ		
DDRD05	E10	IOZ		
DDRD06	A11	IOZ		
DDRD07	B11	IOZ		
DDRD08	E6	IOZ		
DDRD09	E8	IOZ		
DDRD10	A6	IOZ		
DDRD11	A5	IOZ		
DDRD12	D6	IOZ		
DDRD13	C7	IOZ		
DDRD14	D7	IOZ		
DDRD15	B8	IOZ		
DDRD16	E5	IOZ		
DDRD17	B3	IOZ		
DDRD18	F4	IOZ		
DDRD19	E4	IOZ		
DDRD20	A3	IOZ		

Copyright © 2012–2016, Texas Instruments Incorporated

Table 4-2. Terminal Functions — Signals and Control by Function (continued)

SIGNAL NAME	BALL NO.	TYPE	IPD/IPU	DESCRIPTION
DDRD21	B5	IOZ		DDR EMIF Data Bus
DDRD22	C5	IOZ		
DDRD23	D5	IOZ		
DDRD24	E2	IOZ		
DDRD25	F2	IOZ		
DDRD26	B1	IOZ		
DDRD27	C1	IOZ		
DDRD28	D1	IOZ		
DDRD29	D3	IOZ		
DDRD30	C3	IOZ		DDR EMIF Data Bus
DDRD31	E3	IOZ		
$\overline{\text{DDRCE0}}$	B15	OZ		DDR EMIF Chip Enables
$\overline{\text{DDRCE1}}$	C14	OZ		
DDRBA0	C18	OZ		DDR EMIF Bank Address
DDRBA1	D17	OZ		
DDRBA2	B19	OZ		
DDRA00	D16	OZ		DDR EMIF Address Bus
DDRA01	A19	OZ		
DDRA02	E16	OZ		
DDRA03	E15	OZ		
DDRA04	B18	OZ		
DDRA05	A17	OZ		
DDRA06	C16	OZ		
DDRA07	A18	OZ		
DDRA08	D20	OZ		
DDRA09	E20	OZ		
DDRA10	E19	OZ		
DDRA11	B20	OZ		
DDRA12	D18	OZ		
DDRA13	C20	OZ		
DDRA14	E18	OZ		
DDRA15	E17	OZ		
$\overline{\text{DDRCAS}}$	D14	OZ		DDR EMIF Column Address Strobe
$\overline{\text{DDRRAS}}$	A15	OZ		DDR EMIF Row Address Strobe
$\overline{\text{DDRWE}}$	E13	OZ		DDR EMIF Write Enable
DDRCKE0	A16	OZ		DDR EMIF Clock Enable
DDRCKE1	A20	OZ		DDR EMIF Clock Enable
DDRCLKOUTP0	A14	OZ		DDR EMIF Output Clocks to drive SDRAMs (one clock pair per SDRAM)
DDRCLKOUTN0	B14	OZ		
DDRCLKOUTP1	A21	OZ		
DDRCLKOUTN1	B21	OZ		
DDRODT0	E14	OZ		DDR EMIF On Die Termination Outputs used to set termination on the SDRAMs
DDRODT1	D12	OZ		DDR EMIF On Die Termination Outputs used to set termination on the SDRAMs
$\overline{\text{DDRRESET}}$	B16	OZ		DDR Reset signal
DDRSLRATE0	C22	I	Down	DDR Slew rate control
DDRSLRATE1	D22	I	Down	
VREFSSTL	E12	P		Reference Voltage Input for SSTL15 buffers used by DDR EMIF (VDDS15 ÷ 2)

Copyright © 2012–2016, Texas Instruments Incorporated

Table 4-2. Terminal Functions — Signals and Control by Function (continued)

SIGNAL NAME	BALL NO.	TYPE	IPD/IPU	DESCRIPTION
EMIF16				
EMIFRW	L5	OZ	Up	EMIF16 Control Signals
EMIFCE0	K5	OZ	Up	
EMIFCE1	G1	OZ	Up	
EMIFCE2	J2	OZ	Up	
EMIFCE3	M5	OZ	Up	
EMIFOE	L4	OZ	Up	
EMIFWE	K4	OZ	Up	
EMIFBE0	J1	OZ	Up	
EMIFBE1	L3	OZ	Up	
EMIFWAIT0	N5	I	Down	
EMIFWAIT1	M4	I	Down	EMIF16 Control Signal This EMIF16 pin has a secondary function assigned to it as mentioned elsewhere in this table (see uPP).
EMIFA00	K1	OZ	Down	EMIF16 Address These EMIF16 pins have secondary functions assigned to them as mentioned elsewhere in this table (see uPP).
EMIFA01	M3	OZ	Down	
EMIFA02	L2	OZ	Down	
EMIFA03	P5	OZ	Down	
EMIFA04	L1	OZ	Down	
EMIFA05	P4	OZ	Down	
EMIFA06	M2	OZ	Down	
EMIFA07	M1	OZ	Down	
EMIFA08	N2	OZ	Down	
EMIFA09	P3	OZ	Down	
EMIFA10	N1	OZ	Down	
EMIFA11	P2	OZ	Down	
EMIFA12	P1	OZ	Down	
EMIFA13	R5	OZ	Down	
EMIFA14	R3	OZ	Down	
EMIFA15	R4	OZ	Down	
EMIFA16	R2	OZ	Down	
EMIFA17	R1	OZ	Down	
EMIFA18	T4	OZ	Down	
EMIFA19	T1	OZ	Down	
EMIFA20	T5	OZ	Down	
EMIFA21	U1	OZ	Down	
EMIFA22	U2	OZ	Down	
EMIFA23	U3	OZ	Down	

Copyright © 2012–2016, Texas Instruments Incorporated

Table 4-2. Terminal Functions — Signals and Control by Function (continued)

SIGNAL NAME	BALL NO.	TYPE	IPD/IPU	DESCRIPTION
EMIFD00	U4	IOZ	Down	EMIF16 Data These EMIF16 pins have secondary functions assigned to them as mentioned elsewhere in this table (see uPP).
EMIFD01	U5	IOZ	Down	
EMIFD02	V1	IOZ	Down	
EMIFD03	V2	IOZ	Down	
EMIFD04	V3	IOZ	Down	
EMIFD05	V4	IOZ	Down	
EMIFD06	W1	IOZ	Down	
EMIFD07	V5	IOZ	Down	
EMIFD08	W2	IOZ	Down	
EMIFD09	Y1	IOZ	Down	
EMIFD10	W4	IOZ	Down	
EMIFD11	Y2	IOZ	Down	
EMIFD12	W5	IOZ	Down	
EMIFD13	AA1	IOZ	Down	
EMIFD14	AB1	IOZ	Down	
EMIFD15	AA2	IOZ	Down	
uPP				
UPP_2XTXCLK †	M4	I	Down	uPP Transmit Reference Clock (2x Transmit Rate) This uPP pin has a primary function assigned to it as mentioned elsewhere in this table (see EMIF16).
UPP_CH0_CLK †	R2	IOZ	Down	uPP Channel 0 Clock This uPP pin has a primary function assigned to it as mentioned elsewhere in this table (see EMIF16).
UPP_CH0_START †	R1	IOZ	Down	uPP Channel 0 Start This uPP pin has a primary function assigned to it as mentioned elsewhere in this table (see EMIF16).
UPP_CH0_ENABLE †	T4	IOZ	Down	uPP Channel 0 Enable This uPP pin has a primary function assigned to it as mentioned elsewhere in this table (see EMIF16).
UPP_CH0_WAIT †	T1	IOZ	Down	uPP Channel 0 Wait This uPP pin has a primary function assigned to it as mentioned elsewhere in this table (see EMIF16).
UPP_CH1_CLK †	T5	IOZ	Down	uPP Channel 1 Clock This uPP pin has a primary function assigned to it as mentioned elsewhere in this table (see EMIF16).
UPP_CH1_START †	U1	IOZ	Down	uPP Channel 1 Start This uPP pin has a primary function assigned to it as mentioned elsewhere in this table (see EMIF16).
UPP_CH1_ENABLE †	U2	IOZ	Down	uPP Channel 1 Enable This uPP pin has a primary function assigned to it as mentioned elsewhere in this table (see EMIF16).
UPP_CH1_WAIT †	U3	IOZ	Down	uPP Channel 1 Wait This uPP pin has a primary function assigned to it as mentioned elsewhere in this table (see EMIF16).

Copyright © 2012–2016, Texas Instruments Incorporated

Table 4-2. Terminal Functions — Signals and Control by Function (continued)

SIGNAL NAME	BALL NO.	TYPE	IPD/IPU	DESCRIPTION
UPPD00 †	U4	IOZ	Down	uPP Data This uPP pin has a primary function assigned to it as mentioned elsewhere in this table (see EMIF16).
UPPD01 †	U5	IOZ	Down	
UPPD02 †	V1	IOZ	Down	
UPPD03 †	V2	IOZ	Down	
UPPD04 †	V3	IOZ	Down	
UPPD05 †	V4	IOZ	Down	
UPPD06 †	W1	IOZ	Down	
UPPD07 †	V5	IOZ	Down	
UPPD08 †	W2	IOZ	Down	
UPPD09 †	Y1	IOZ	Down	
UPPD10 †	W4	IOZ	Down	
UPPD11 †	Y2	IOZ	Down	
UPPD12 †	W5	IOZ	Down	
UPPD13 †	AA1	IOZ	Down	
UPPD14 †	AB1	IOZ	Down	
UPPD15 †	AA2	IOZ	Down	
UPPXD00 †	K1	IOZ	Down	uPP Extended Data This uPP ppn has a primary function assigned to it as mentioned elsewhere in this table (see EMIF16).
UPPXD01 †	M3	IOZ	Down	
UPPXD02 †	L2	IOZ	Down	
UPPXD03 †	P5	IOZ	Down	
UPPXD04 †	L1	IOZ	Down	
UPPXD05 †	P4	IOZ	Down	
UPPXD06 †	M2	IOZ	Down	
UPPXD07 †	M1	IOZ	Down	
UPPXD08 †	N2	IOZ	Down	
UPPXD09 †	P3	IOZ	Down	
UPPXD10 †	N1	IOZ	Down	
UPPXD11 †	P2	IOZ	Down	
UPPXD12 †	P1	IOZ	Down	
UPPXD13 †	R5	IOZ	Down	
UPPXD14 †	R3	IOZ	Down	
UPPXD15 †	R4	IOZ	Down	

Copyright © 2012–2016, Texas Instruments Incorporated

Table 4-2. Terminal Functions — Signals and Control by Function (continued)

SIGNAL NAME	BALL NO.	TYPE	IPD/IPU	DESCRIPTION
				pEMU
EMU00	V24	IOZ	Up	Emulation and Trace Port
EMU01	V25	IOZ	Up	
EMU02	W25	IOZ	Up	
EMU03	W23	IOZ	Up	
EMU04	W24	IOZ	Up	
EMU05	Y25	IOZ	Up	
EMU06	Y24	IOZ	Up	
EMU07	Y23	IOZ	Up	
EMU08	W22	IOZ	Up	
EMU09	Y22	IOZ	Up	
EMU10	AA24	IOZ	Up	
EMU11	AA25	IOZ	Up	
EMU12	AB25	IOZ	Up	
EMU13	AC25	IOZ	Up	
EMU14	AA23	IOZ	Up	
EMU15	AB22	IOZ	Up	
EMU16	AD25	IOZ	Up	
EMU17	AC24	IOZ	Up	
EMU18	Y21	IOZ	Up	
				General-Purpose Input/Output (GPIO)
GPIO00	T25	IOZ	Up	General-Purpose Input/Output These GPIO pins have secondary functions assigned to them as mentioned elsewhere in this table (see Boot Configuration Pins).
GPIO01	R25	IOZ	Down	
GPIO02	R23	IOZ	Down	
GPIO03	U25	IOZ	Down	
GPIO04	T23	IOZ	Down	
GPIO05	U24	IOZ	Down	
GPIO06	T22	IOZ	Down	
GPIO07	R21	IOZ	Down	
GPIO08	U22	IOZ	Down	
GPIO09	U23	IOZ	Down	
GPIO10	V23	IOZ	Down	
GPIO11	U21	IOZ	Down	
GPIO12	T21	IOZ	Down	
GPIO13	V22	IOZ	Down	
GPIO14	W21	IOZ	Down	
GPIO15	V21	IOZ	Down	
GPIO16 †	AD20	IOZ	Down	General-Purpose Input/Output This GPIO pin has a primary function assigned to it as mentioned elsewhere in this table (see Timer) and a tertiary function assigned to it as mentioned elsewhere in this table (see Boot Configuration Pins).
GPIO17 †	AE21	IOZ	Down	General-Purpose Input/Output These GPIO pins have primary functions assigned to them as mentioned elsewhere in this table (see Timer).
GPIO18 †	AC19	IOZ	Down	
GPIO19 †	AE20	IOZ	Down	

Copyright © 2012–2016, Texas Instruments Incorporated

Table 4-2. Terminal Functions — Signals and Control by Function (continued)

SIGNAL NAME	BALL NO.	TYPE	IPD/IPU	DESCRIPTION
GPIO20 †	AB15	IOZ	Down	General-Purpose Input/Output These GPIO pins have primary functions assigned to them as mentioned elsewhere in this table (see UART).
GPIO21 †	AA15	IOZ	Down	
GPIO22 †	AC17	IOZ	Down	
GPIO23 †	AB17	IOZ	Down	
GPIO24 †	AC14	IOZ	Down	
GPIO25 †	AC15	IOZ	Down	
GPIO26 †	AE16	IOZ	Down	
GPIO27 †	AD15	IOZ	Down	
GPIO28 †	AA12	IOZ	Up	General-Purpose Input/Output These GPIO pins have primary functions assigned to them as mentioned elsewhere in this table (see SPI).
GPIO29 †	AA14	IOZ	Up	
GPIO30 †	AB14	IOZ	Down	
GPIO31 †	AB13	IOZ	Down	
HyperLink				
MCMRXN0	P24	I		Serial HyperLink Receive Data
MCMRXP0	N24	I		
MCMRXN1	M25	I		
MCMRXP1	N25	I		
MCMRXN2	J25	I		
MCMRXP2	K25	I		
MCMRXN3	K24	I		
MCMRXP3	L24	I		
MCMTXN0	P22	O		Serial HyperLink Transmit Data
MCMTXP0	N22	O		
MCMTXN1	N21	O		
MCMTXP1	M21	O		
MCMTXN2	K22	O		
MCMTXP2	L22	O		
MCMTXN3	J21	O		
MCMTXP3	K21	O		
MCMRXFLCLK	B24	O	Down	Serial HyperLink Sideband Signals
MCMRXFLDAT	C24	O	Down	
MCMTXFLCLK	E25	I	Down	
MCMTXFLDAT	D25	I	Down	
MCMRXPMCLK	E24	I	Down	
MCMRXPMDAT	D24	I	Down	
MCMTXPMCLK	F24	O	Down	
MCMTXPMDAT	G24	O	Down	
MCMREFCLKOUTP	G25	O		HyperLink Reference clock output for daisy chain connection
MCMREFCLKOUTN	F25	O		
I^2C				
SCL	AA17	IOZ		I^2C Clock
SDA	AA18	IOZ		I^2C Data

Copyright © 2012–2016, Texas Instruments Incorporated

Table 4-2. Terminal Functions — Signals and Control by Function (continued)

SIGNAL NAME	BALL NO.	TYPE	IPD/IPU	DESCRIPTION
JTAG				
TCK	AD17	I	Up	JTAG Clock Input
TDI	AE17	I	Up	JTAG Data Input
TDO	AD19	OZ	Up	JTAG Data Output
TMS	AE18	I	Up	JTAG Test Mode Input
$\overline{\text{TRST}}$	AB19	I	Down	JTAG Reset
McBSP				
CLKR0	AA21	IOZ	Down	McBSP Receive Clock
CLKX0	Y20	IOZ	Down	McBSP Transmit Clock
CLKS0	AC23	IOZ	Down	McBSP Slow Clock
FSR0	AD24	IOZ	Down	McBSP Receive Frame Sync
FSX0	AA20	IOZ	Down	McBSP Transmit Frame Sync
DR0	AB21	I	Down	McBSP Receive Data
DX0	AC22	OZ	Down	McBSP Transmit Data
CLKR1	AD23	IOZ	Down	McBSP Receive Clock
CLKX1	AE24	IOZ	Down	McBSP Transmit Clock
CLKS1	AC21	IOZ	Down	McBSP Slow Clock
FSR1	AD22	IOZ	Down	McBSP Receive Frame Sync
FSX1	AE23	IOZ	Down	McBSP Transmit Frame Sync
DR1	AD21	I	Down	McBSP Receive Data
DX1	AE22	OZ	Down	McBSP Transmit Data
MDIO				
MDIO	AB16	IOZ	Up	MDIO Data
MDCLK	AA16	O	Down	MDIO Clock
PCIe				
PCIERXN0	AE12	I		PCIexpress Receive Data (2 links)
PCIERXP0	AE11	I		
PCIERXN1	AD10	I		
PCIERXP1	AD11	I		
PCIETXN0	AC12	O		PCIexpress Transmit Data (2 links)
PCIETXP0	AC11	O		
PCIETXN1	AB11	O		
PCIETXP1	AB10	O		
Serial RapidIO				
RIORXN0	AE9	I		Serial RapidIO Receive Data (4 links)
RIORXP0	AE8	I		
RIORXN1	AD8	I		
RIORXP1	AD7	I		
RIORXN2	AE5	I		
RIORXP2	AE6	I		
RIORXN3	AD4	I		
RIORXP3	AD5	I		

Copyright © 2012–2016, Texas Instruments Incorporated

Table 4-2. Terminal Functions — Signals and Control by Function (continued)

SIGNAL NAME	BALL NO.	TYPE	IPD/IPU	DESCRIPTION
RIOTXN0	AC9	O		Serial RapidIO Receive Data (4 links)
RIOTXP0	AC8	O		
RIOTXN1	AB7	O		
RIOTXP1	AB8	O		
RIOTXN2	AC5	O		
RIOTXP2	AC6	O		
RIOTXN3	AB4	O		
RIOTXP3	AB5	O		
SGMII				
SGMII0RXN	AE2	I		Ethernet MAC SGMII Receive Data
SGMII0RXP	AE3	I		
SGMII0TXN	AC2	O		Ethernet MAC SGMII Transmit Data
SGMII0TXP	AC3	O		
SmartReflex				
VCNTL0	E22	OZ		Voltage Control Outputs to variable core power supply. These are open-drain output buffers.
VCNTL1	E23	OZ		
VCNTL2	F23	OZ		
VCNTL3	G23	OZ		
SPI				
SPISCS0	AA12	OZ	Up	SPI Interface Enable 0 This SPI pin has a secondary function assigned to it as mentioned elsewhere in this table (see GPIO).
SPISCS1	AA14	OZ	Up	SPI Interface Enable 1 This SPI pin has a secondary function assigned to it as mentioned elsewhere in this table (see GPIO).
SPICLK	AA13	OZ	Down	SPI Clock
SPIDIN	AB14	I	Down	SPI Data In This SPI pin has a secondary function assigned to it as mentioned elsewhere in this table (see GPIO).
SPIDOUT	AB13	OZ	Down	SPI Data Out This SPI pin has a secondary function assigned to it as mentioned elsewhere in this table (see GPIO).
Timer				
TIMI0	AD20	I	Down	Timer Inputs This SPI pin has a secondary function assigned to it as mentioned elsewhere in this table (see GPIO).
TIMI1	AE21	I	Down	
TIMO0	AC19	OZ	Down	Timer Outputs These Timer pins have secondary functions assigned to them as mentioned elsewhere in this table
TIMO1	AE20	OZ	Down	
UART				
UARTRXD	AB15	I	Down	UART Serial Data In This SPI pin has a secondary function assigned to it as mentioned elsewhere in this table (see GPIO).
UARTTXD	AA15	OZ	Down	UART Serial Data Out This SPI pin has a secondary function assigned to it as mentioned elsewhere in this table (see GPIO).

Copyright © 2012–2016, Texas Instruments Incorporated

Table 4-2. Terminal Functions — Signals and Control by Function (continued)

SIGNAL NAME	BALL NO.	TYPE	IPD/IPU	DESCRIPTION
UARTCTS	AC17	I	Down	UART Clear To Send This SPI pin has a secondary function assigned to it as mentioned elsewhere in this table (see GPIO).
UARTRTS	AB17	OZ	Down	UART Request To Send This SPI pin has a secondary function assigned to it as mentioned elsewhere in this table (see GPIO).
UARTRXD1	AC14	I	Down	UART Serial Data In This SPI pin has a secondary function assigned to it as mentioned elsewhere in this table (see GPIO).
UARTTXD1	AC15	OZ	Down	UART Serial Data Out This SPI pin has a secondary function assigned to it as mentioned elsewhere in this table (see GPIO).
UARTCTS1	AE16	I	Down	UART Clear To Send This SPI pin has a secondary function assigned to it as mentioned elsewhere in this table (see GPIO).
UARTRTS1	AD15	OZ	Down	UART Request To Send This SPI pin has a secondary function assigned to it as mentioned elsewhere in this table (see GPIO).
Reserved				
RSV01	AA22	IOZ	Up	Reserved - pullup to DVDD18
RSV02	J3	OZ	Down	Reserved - leave unconnected
RSV03	H2	OZ	Down	Reserved - leave unconnected
RSV04	AC18	O		Reserved - leave unconnected
RSV05	AB18	O		Reserved - leave unconnected
RSV06	B23	O		Reserved - leave unconnected
RSV07	A23	O		Reserved - leave unconnected
RSV08	Y19	OZ	Down	Reserved - leave unconnected
RSV09	C23	OZ	Down	Reserved - leave unconnected
RSV10	G22	A		Reserved - connect to GND
RSV11	H22	A		Reserved - leave unconnected
RSV12	Y5	A		Reserved - leave unconnected
RSV13	Y4	A		Reserved - leave unconnected
RSV14	F21	A		Reserved - leave unconnected
RSV15	G21	A		Reserved - leave unconnected
RSV16	J20	A		Reserved - leave unconnected
RSV17	AA7	A		Reserved - leave unconnected
RSV18	AA11	A		Reserved - leave unconnected
RSV19	AB3	A		Reserved - leave unconnected
RSV20	F22	IOZ		Reserved - leave unconnected
RSV21	D23	IOZ		Reserved - leave unconnected
RSV0A	G19	A		Reserved - leave unconnected
RSV0B	G20	A		Reserved - leave unconnected

Copyright © 2012–2016, Texas Instruments Incorporated

Table 4-3. Terminal Functions — Power and Ground

SUPPLY	BALL NO.	VOLTS	DESCRIPTION
AVDDA1	Y15	1.8	PLL Supply - CORE_PLL
AVDDA2	F20	1.8	PLL Supply - DDR3_PLL
CVDD	H9, H11, H13, H15, H17, J10, J12, J14, J16, K11, K13, K15, L8, L10, L12, L14, L16, L18, M9, M11, M13, M15, M17, N8, N10, N12, N14, N16, N18, P9, P11, P13, P15, P17, P19, R10, R12, R14, R16, R18, T11, T13, T15, U10, U12, U14, U16, V9, V11, V13, V15, V17	0.85 to 1.1	SmartReflex core supply voltage
CVDD1	J8, J18, K9, K17, T9, T17, U8, U18	1.0	Fixed core supply voltage for memory array
DVDD15	B10, C6, C17, C21, D2, D4, D8, D13, D15, D19, F7, F9, F11, F13, F17, F19, G8, G10, G12, G14, G16, G18	1.5	DDR I/O supply
DVDD18	A24, E21, G3, G6, H7, H19, H24, J6, K3, K7, L6, M7, N3, N6, P7, R6, R20, T3, T7, T19, T24, U6, U20, V7, V19, W6, W14, W16, W18, W20, Y3, Y13, Y17, AB23, AC16, AC20	1.8	I/O supply
VDDR1	M20	1.5	HyperLink SerDes regulator supply
VDDR2	AA9	1.5	PCIe SerDes regulator supply
VDDR3	AA3	1.5	SGMII SerDes regulator supply
VDDR4	AA5	1.5	SRIO SerDes regulator supply
VDDT1	K19, L20, M19, N20	1.0	HyperLink SerDes termination supply
VDDT2	W8, W10, W12, Y7, Y9, Y11	1.0	SGMII/SRIO/PCIe SerDes termination supply
VREFSSTL	E12	0.75	DDR3 reference voltage
VSS	A1, A10, A25, B6, B17, C2, C4, C8, C13, C15, C19, D21, E11, F3, F6, F8, F10, F12, F14, F16, F18, G7, G9, G11, G13, G15, G17, H6, H8, H10, H12, H14, H16, H18, H20, H21, H23, H25, J7, J9, J11, J13, J15, J17, J19, J22, J23, J24, K2, K6, K8, K10, K12, K14, K16, K18, K20, K23, L7, L9, L11, L13, L15, L17, L19, L21, L23, L25, M6, M8, M10, M12, M14, M16, M18, M22, M23, M24, N4, N7, N9, N11, N13, N15, N17, N19, N23, P6, P8, P10, P12, P14, P16, P18, P20, P21, P23, P25, R7, R8, R9, R11, R13, R15, R17, R19, R22, R24, T2, T6, T8, T10, T12, T14, T16, T18, T20, U7, U9, U11, U13, U15, U17, U19, V6, V8, V10, V12, V14, V16, V18, V20, W3, W7, W9, W11, W13, W15, W17, W19, Y6, Y8, Y10, Y12, Y14, Y16, AA4, AA6, AA8, AA10, AB2, AB6, AB9, AB12, AB20, AB24, AC1, AC4, AC7, AC10, AC13, AD1, AD2, AD3, AD6, AD9, AD12, AD16, AE1, AE4, AE7, AE10, AE13, AE25	GND	Ground

Copyright © 2012–2016, Texas Instruments Incorporated

Table 4-4. Terminal Functions — By Signal Name

SIGNAL NAME	BALL NUMBER		SIGNAL NAME	BALL NUMBER		SIGNAL NAME	BALL NUMBER
AVDDA1	Y15		DDRA09	E20		DDRD22	C5
AVDDA2	F20		DDRA10	E19		DDRD23	D5
BOOTCOMPLETE	H3		DDRA11	B20		DDRD24	E2
BOOTMODE00 †	R25		DDRA12	D18		DDRD25	F2
BOOTMODE01 †	R23		DDRA13	C20		DDRD26	B1
BOOTMODE02 †	U25		DDRA14	E18		DDRD27	C1
BOOTMODE03 †	T23		DDRA15	E17		DDRD28	D1
BOOTMODE04 †	U24		DDRBA0	C18		DDRD29	D3
BOOTMODE05 †	T22		DDRBA1	D17		DDRD30	C3
BOOTMODE06 †	R21		DDRBA2	B19		DDRD31	E3
BOOTMODE07 †	U22		$\overline{\text{DDRCAS}}$	D14		DDRDQM0	A8
BOOTMODE08 †	U23		DDRCB00	D11		DDRDQM1	E7
BOOTMODE09 †	V23		DDRCB01	B12		DDRDQM2	F5
BOOTMODE10 †	U21		DDRCB02	C11		DDRDQM3	E1
BOOTMODE11 †	T21		DDRCB03	A12		DDRDQM8	C12
BOOTMODE12 †	V22		$\overline{\text{DDRCE0}}$	B15		DDRDQS0N	C10
CLKR0	AA21		$\overline{\text{DDRCE1}}$	C14		DDRDQS0P	D10
CLKR1	AD23		DDRCKE0	A16		DDRDQS1N	A7
CLKS0	AC23		DDRCKE1	A20		DDRDQS1P	B7
CLKS1	AC21		DDRCLKN	B22		DDRDQS2N	A4
CLKX0	Y20		DDRCLKOUTN0	B14		DDRDQS2P	B4
CLKX1	AE24		DDRCLKOUTN1	B21		DDRDQS3N	B2
CORECLKN	AE19		DDRCLKOUTP0	A14		DDRDQS3P	A2
CORECLKP	AD18		DDRCLKOUTP1	A21		DDRDQS8N	A13
CORESEL0	J5		DDRCLKP	A22		DDRDQS8P	B13
CORESEL1	G5		DDRD00	A9		DDRODT0	E14
CVDD	H9, H11, H13, H15, H17, J10, J12, J14, J16, K11, K13, K15, L8, L10, L12, L14, L16, L18, M9, M11, M13, M15, M17, N8, N10, N12, N14, N16, N18, P9, P11, P13, P15, P17, P19, R10, R12, R14, R16, R18, T11, T13, T15, U10, U12, U14, U16, V9, V11, V13, V15, V17		DDRD01	C9		DDRODT1	D12
			DDRD02	D9		$\overline{\text{DDRRAS}}$	A15
			DDRD03	B9		$\overline{\text{DDRRESET}}$	B16
			DDRD04	E9		DDRSLRATE0	C22
			DDRD05	E10		DDRSLRATE1	D22
			DDRD06	A11		$\overline{\text{DDRWE}}$	E13
			DDRD07	B11		DR0	AB21
			DDRD08	E6		DR1	AD21
			DDRD09	E8		DVDD15	B10, C6, C17, C21, D2, D4, D8, D13, D15, D19, F7, F9, F11, F13, F17, F19, G8, G10, G12, G14, G16, G18
			DDRD10	A6			
CVDD1	J8, J18, K9, K17, T9, T17, U8, U18		DDRD11	A5			
			DDRD12	D6			
DDRA00	D16		DDRD13	C7			
DDRA01	A19		DDRD14	D7		DVDD18	A24, E21, G3, G6, H7, H19, H24, J6, K3, K7, L6, M7, N3, N6, P7, R6, R20, T3, T7, T19, T24, U6, U20, V7, V19, W6, W14, W16, W18, W20, Y3, Y13, Y17, AB23, AC16, AC20
DDRA02	E16		DDRD15	B8			
DDRA03	E15		DDRD16	E5			
DDRA04	B18		DDRD17	B3			
DDRA05	A17		DDRD18	F4			
DDRA06	C16		DDRD19	E4			
DDRA07	A18		DDRD20	A3			
DDRA08	D20		DDRD21	B5			

Copyright © 2012–2016, Texas Instruments Incorporated

Table 4-4. Terminal Functions — By Signal Name (continued)

SIGNAL NAME	BALL NUMBER		SIGNAL NAME	BALL NUMBER		SIGNAL NAME	BALL NUMBER
DX0	AC22		EMIFD15	AA2		GPIO18 †	AC19
DX1	AE22		$\overline{\text{EMIFOE}}$	L4		GPIO19 †	AE20
EMIFA00	K1		EMIFRNW	L5		GPIO20 †	AB15
EMIFA01	M3		EMIFWAIT0	N5		GPIO21 †	AA15
EMIFA02	L2		EMIFWAIT1	M4		GPIO22 †	AC17
EMIFA03	P5		$\overline{\text{EMIFWE}}$	K4		GPIO23 †	AB17
EMIFA04	L1		EMU00	V24		GPIO24 †	AC14
EMIFA05	P4		EMU01	V25		GPIO25 †	AC15
EMIFA06	M2		EMU02	W25		GPIO26 †	AE16
EMIFA07	M1		EMU03	W23		GPIO27 †	AD15
EMIFA08	N2		EMU04	W24		GPIO28 †	AA12
EMIFA09	P3		EMU05	Y25		GPIO29 †	AA14
EMIFA10	N1		EMU06	Y24		GPIO30 †	AB14
EMIFA11	P2		EMU07	Y23		GPIO31 †	AB13
EMIFA12	P1		EMU08	W22		HOUT	G2
EMIFA13	R5		EMU09	Y22		LENDIAN †	T25
EMIFA14	R3		EMU10	AA24		$\overline{\text{LRESETNMIEN}}$	F1
EMIFA15	R4		EMU11	AA25		$\overline{\text{LRESET}}$	G4
EMIFA16	R2		EMU12	AB25		MCMCLKN	B25
EMIFA17	R1		EMU13	AC25		MCMCLKP	C25
EMIFA18	T4		EMU14	AA23		MCMREFCLKOUTN	F25
EMIFA19	T1		EMU15	AB22		MCMREFCLKOUTP	G25
EMIFA20	T5		EMU16	AD25		MCMRXFLCLK	B24
EMIFA21	U1		EMU17	AC24		MCMRXFLDAT	C24
EMIFA22	U2		EMU18	Y21		MCMRXN0	P24
EMIFA23	U3		FSR0	AD24		MCMRXN1	M25
$\overline{\text{EMIFBE0}}$	J1		FSR1	AD22		MCMRXN2	J25
$\overline{\text{EMIFBE1}}$	L3		FSX0	AA20		MCMRXN3	K24
$\overline{\text{EMIFCE0}}$	K5		FSX1	AE23		MCMRXP0	N24
$\overline{\text{EMIFCE1}}$	G1		GPIO00	T25		MCMRXP1	N25
$\overline{\text{EMIFCE2}}$	J2		GPIO01	R25		MCMRXP2	K25
$\overline{\text{EMIFCE3}}$	M5		GPIO02	R23		MCMRXP3	L24
EMIFD00	U4		GPIO03	U25		MCMRXPMCLK	E24
EMIFD01	U5		GPIO04	T23		MCMRXPMDAT	D24
EMIFD02	V1		GPIO05	U24		MCMTXFLCLK	E25
EMIFD03	V2		GPIO06	T22		MCMTXFLDAT	D25
EMIFD04	V3		GPIO07	R21		MCMTXN0	P22
EMIFD05	V4		GPIO08	U22		MCMTXN1	N21
EMIFD06	W1		GPIO09	U23		MCMTXN2	K22
EMIFD07	V5		GPIO10	V23		MCMTXN3	J21
EMIFD08	W2		GPIO11	U21		MCMTXP0	N22
EMIFD09	Y1		GPIO12	T21		MCMTXP1	M21
EMIFD10	W4		GPIO13	V22		MCMTXP2	L22
EMIFD11	Y2		GPIO14	W21		MCMTXP3	K21
EMIFD12	W5		GPIO15	V21		MCMTXPMCLK	F24
EMIFD13	AA1		GPIO16 †	AD20		MCMTXPMDAT	G24
EMIFD14	AB1		GPIO17 †	AE21		MDCLK	AA16

Copyright © 2012–2016, Texas Instruments Incorporated

Table 4-4. Terminal Functions — By Signal Name (continued)

SIGNAL NAME	BALL NUMBER		SIGNAL NAME	BALL NUMBER		SIGNAL NAME	BALL NUMBER
MDIO	AB16		RSV12	Y5		UPP_CH0_WAIT †	T1
$\overline{\text{NMI}}$	H1		RSV13	Y4		UPP_CH1_CLK †	T5
PCIECLKN	AE15		RSV14	F21		UPP_CH1_ENABLE †	U2
PCIECLKP	AD14		RSV15	G21		UPP_CH1_START †	U1
PCIERXN0	AE12		RSV16	J20		UPP_CH1_WAIT †	U3
PCIERXN1	AD10		RSV17	AA7		UPPD00 †	U4
PCIERXP0	AE11		RSV18	AA11		UPPD01 †	U5
PCIERXP1	AD11		RSV19	AB3		UPPD02 †	V1
PCIESSEN ‡	AD20		RSV20	F22		UPPD03 †	V2
PCIETXN0	AC12		RSV21	D23		UPPD04 †	V3
PCIETXN1	AB11		SCL	AA17		UPPD05 †	V4
PCIETXP0	AC11		SDA	AA18		UPPD06 †	W1
PCIETXP1	AB10		SGMII0RXN	AE2		UPPD07 †	V5
$\overline{\text{POR}}$	Y18		SGMII0RXP	AE3		UPPD08 †	W2
PTV15	F15		SGMII0TXN	AC2		UPPD09 †	Y1
$\overline{\text{RESETFULL}}$	J4		SGMII0TXP	AC3		UPPD10 †	W4
$\overline{\text{RESETSTAT}}$	H5		SPICLK	AA13		UPPD11 †	Y2
$\overline{\text{RESET}}$	H4		SPIDIN	AB14		UPPD12 †	W5
RIORXN0	AE9		SPIDOUT	AB13		UPPD13 †	AA1
RIORXN1	AD8		SPISCS0	AA12		UPPD14 †	AB1
RIORXN2	AE5		SPISCS1	AA14		UPPD15 †	AA2
RIORXN3	AD4		SRIOSGMIICLKN	AE14		UPPXD00 †	K1
RIORXP0	AE8		SRIOSGMIICLKP	AD13		UPPXD01 †	M3
RIORXP1	AD7		SYSCLKOUT	AA19		UPPXD02 †	L2
RIORXP2	AE6		TCK	AD17		UPPXD03 †	P5
RIORXP3	AD5		TDI	AE17		UPPXD04 †	L1
RIOTXN0	AC9		TDO	AD19		UPPXD05 †	P4
RIOTXN1	AB7		TIMI0	AD20		UPPXD06 †	M2
RIOTXN2	AC5		TIMI1	AE21		UPPXD07 †	M1
RIOTXN3	AB4		TIMO0	AC19		UPPXD08 †	N2
RIOTXP0	AC8		TIMO1	AE20		UPPXD09 †	P3
RIOTXP1	AB8		TMS	AE18		UPPXD10 †	N1
RIOTXP2	AC6		TRST	AB19		UPPXD11 †	P2
RIOTXP3	AB5		UARTCTS	AC17		UPPXD12 †	P1
RSV01	AA22		UARTCTS1	AE16		UPPXD13 †	R5
RSV02	J3		UARTRTS	AB17		UPPXD14 †	R3
RSV03	H2		UARTRTS1	AD15		UPPXD15 †	R4
RSV04	AC18		UARTRXD	AB15		VCNTL0	E22
RSV05	AB18		UARTRXD1	AC14		VCNTL1	E23
RSV06	B23		UARTTXD	AA15		VCNTL2	F23
RSV07	A23		UARTTXD1	AC15		VCNTL3	G23
RSV08	Y19		UPP_2XTXCLK †	M4		VDDR1	M20
RSV09	C23		UPP_CH0_CLK †	R2		VDDR2	AA9
RSV0A	G19		UPP_CH0_ ENABLE †	T4		VDDR3	AA3
RSV0B	G20					VDDR4	AA5
RSV10	G22		UPP_CH0_ START †	R1		VDDT1	K19, L20, M19, N20
RSV11	H22						

Copyright © 2012–2016, Texas Instruments Incorporated

Table 4-4. Terminal Functions — By Signal Name (continued)

SIGNAL NAME	BALL NUMBER		SIGNAL NAME	BALL NUMBER		SIGNAL NAME	BALL NUMBER
VDDT2	W8, W10, W12, Y7, Y9, Y11						
VDDT1	N20						
VDDT2	W10						
VDDT2	W12						
VDDT2	Y7						
VDDT2	Y9						
VDDT2	Y11						
VREFSSTL	E12						
VSS	A1, A10, A25, B6, B17, C2, C4, C8, C13, C15, C19, D21, E11, F3, F6, F8, F10, F12, F14, F16, F18, G7, G9, G11, G13, G15, G17, H6, H8, H10, H12, H14, H16, H18, H20, H21, H23, H25, J7, J9, J11, J13, J15, J17, J19, J22, J23, J24, K2, K6, K8, K10, K12, K14, K16, K18, K20, K23, L7, L9, L11, L13, L15, L17, L19, L21, L23, L25, M6, M8, M10, M12, M14, M16, M18, M22, M23, M24, N4, N7, N9, N11, N13, N15, N17, N19, N23, P6, P8, P10, P12, P14, P16, P18, P20, P21, P23, P25, R7, R8, R9, R11, R13, R15, R17, R19, R22, R24, T2, T6, T8, T10, T12, T14, T16, T18, T20, U7, U9, U11, U13, U15, U17, U19, V6, V8, V10, V12, V14, V16, V18, V20, W3, W7, W9, W11, W13, W15, W17, W19, Y6, Y8, Y10, Y12, Y14, Y16, AA4, AA6, AA8, AA10, AB2, AB6, AB9, AB12, AB20, AB24, AC1, AC4, AC7, AC10, AC13, AD1, AD2, AD3, AD6, AD9, AD12, AD16, AE1, AE4, AE7, AE10, AE13, AE25						

Copyright © 2012–2016, Texas Instruments Incorporated

Table 4-5. Terminal Functions — By Ball Number

BALL NUMBER	SIGNAL NAME		BALL NUMBER	SIGNAL NAME		BALL NUMBER	SIGNAL NAME
A1	VSS		B23	RSV06		D20	DDRA08
A2	DDRDQS3P		B24	MCMRXFLCLK		D21	VSS
A3	DDRD20		B25	MCMCLKN		D22	DDRSLRATE1
A4	DDRDQS2N		C1	DDRD27		D23	RSV21
A5	DDRD11		C2	VSS		D24	MCMRXPMDAT
A6	DDRD10		C3	DDRD30		D25	MCMTXFLDAT
A7	DDRDQS1N		C4	VSS		E1	DDRDQM3
A8	DDRDQM0		C5	DDRD22		E2	DDRD24
A9	DDRD00		C6	DVDD15		E3	DDRD31
A10	VSS		C7	DDRD13		E4	DDRD19
A11	DDRD06		C8	VSS		E5	DDRD16
A12	DDRCB03		C9	DDRD01		E6	DDRD08
A13	DDRDQS8N		C10	DDRDQS0N		E7	DDRDQM1
A14	DDRCLKOUTP0		C11	DDRCB02		E8	DDRD09
A15	$\overline{\text{DDRRAS}}$		C12	DDRDQM8		E9	DDRD04
A16	DDRCKE0		C13	VSS		E10	DDRD05
A17	DDRA05		C14	$\overline{\text{DDRCE1}}$		E11	VSS
A18	DDRA07		C15	VSS		E12	VREFSSTL
A19	DDRA01		C16	DDRA06		E13	$\overline{\text{DDRWE}}$
A20	DDRCKE1		C17	DVDD15		E14	DDRODT0
A21	DDRCLKOUTP1		C18	DDRBA0		E15	DDRA03
A22	DDRCLKP		C19	VSS		E16	DDRA02
A23	RSV07		C20	DDRA13		E17	DDRA15
A24	DVDD18		C21	DVDD15		E18	DDRA14
A25	VSS		C22	DDRSLRATE0		E19	DDRA10
B1	DDRD26		C23	RSV09		E20	DDRA09
B2	DDRDQS3N		C24	MCMRXFLDAT		E21	DVDD18
B3	DDRD17		C25	MCMCLKP		E22	VCNTL0
B4	DDRDQS2P		D1	DDRD28		E23	VCNTL1
B5	DDRD21		D2	DVDD15		E24	MCMRXPMCLK
B6	VSS		D3	DDRD29		E25	MCMTXFLCLK
B7	DDRDQS1P		D4	DVDD15		F1	$\overline{\text{LRESETNMIEN}}$
B8	DDRD15		D5	DDRD23		F2	DDRD25
B9	DDRD03		D6	DDRD12		F3	VSS
B10	DVDD15		D7	DDRD14		F4	DDRD18
B11	DDRD07		D8	DVDD15		F5	DDRDQM2
B12	DDRCB01		D9	DDRD02		F6	VSS
B13	DDRDQS8P		D10	DDRDQS0P		F7	DVDD15
B14	DDRCLKOUTN0		D11	DDRCB00		F8	VSS
B15	$\overline{\text{DDRCE0}}$		D12	DDRODT1		F9	DVDD15
B16	$\overline{\text{DDRRESET}}$		D13	DVDD15		F10	VSS
B17	VSS		D14	$\overline{\text{DDRCAS}}$		F11	DVDD15
B18	DDRA04		D15	DVDD15		F12	VSS
B19	DDRBA2		D16	DDRA00		F13	DVDD15
B20	DDRA11		D17	DDRBA1		F14	VSS
B21	DDRCLKOUTN1		D18	DDRA12		F15	PTV15
B22	DDRCLKN		D19	DVDD15		F16	VSS

Copyright © 2012–2016, Texas Instruments Incorporated

Table 4-5. Terminal Functions — By Ball Number (continued)

BALL NUMBER	SIGNAL NAME		BALL NUMBER	SIGNAL NAME		BALL NUMBER	SIGNAL NAME
F17	DVDD15		H14	VSS		K10	VSS
F18	VSS		H15	CVDD		K11	CVDD
F19	DVDD15		H16	VSS		K12	VSS
F20	AVDDA2		H17	CVDD		K13	CVDD
F21	RSV14		H18	VSS		K14	VSS
F22	RSV20		H19	DVDD18		K15	CVDD
F23	VCNTL2		H20	VSS		K16	VSS
F24	MCMTXPMCLK		H21	VSS		K17	CVDD1
F25	MCMREFCLKOUTN		H22	RSV11		K18	VSS
G1	$\overline{\text{EMIFCE1}}$		H23	VSS		K19	VDDT1
G2	HOUT		H24	DVDD18		K20	VSS
G3	DVDD18		H25	VSS		K21	MCMTXP3
G4	$\overline{\text{LRESET}}$		J1	$\overline{\text{EMIFBE0}}$		K22	MCMTXN2
G5	CORESEL1		J2	$\overline{\text{EMIFCE2}}$		K23	VSS
G6	DVDD18		J3	RSV02		K24	MCMRXN3
G7	VSS		J4	$\overline{\text{RESETFULL}}$		K25	MCMRXP2
G8	DVDD15		J5	CORESEL0		L1	EMIFA04
G9	VSS		J6	DVDD18		L1	UPPXD04 †
G10	DVDD15		J7	VSS		L2	EMIFA02
G11	VSS		J8	CVDD1		L2	UPPXD02 †
G12	DVDD15		J9	VSS		L3	$\overline{\text{EMIFBE1}}$
G13	VSS		J10	CVDD		L4	$\overline{\text{EMIFOE}}$
G14	DVDD15		J11	VSS		L5	EMIFRNW
G15	VSS		J12	CVDD		L6	DVDD18
G16	DVDD15		J13	VSS		L7	VSS
G17	VSS		J14	CVDD		L8	CVDD
G18	DVDD15		J15	VSS		L9	VSS
G19	RSV0A		J16	CVDD		L10	CVDD
G20	RSV0B		J17	VSS		L11	VSS
G21	RSV15		J18	CVDD1		L12	CVDD
G22	RSV10		J19	VSS		L13	VSS
G23	VCNTL3		J20	RSV16		L14	CVDD
G24	MCMTXPMDAT		J21	MCMTXN3		L15	VSS
G25	MCMREFCLKOUTP		J22	VSS		L16	CVDD
H1	$\overline{\text{NMI}}$		J23	VSS		L17	VSS
H2	RSV03		J24	VSS		L18	CVDD
H3	BOOTCOMPLETE		J25	MCMRXN2		L19	VSS
H4	$\overline{\text{RESET}}$		K1	EMIFA00		L20	VDDT1
H5	$\overline{\text{RESETSTAT}}$		K1	UPPXD00 †		L21	VSS
H6	VSS		K2	VSS		L22	MCMTXP2
H7	DVDD18		K3	DVDD18		L23	VSS
H8	VSS		K4	$\overline{\text{EMIFWE}}$		L24	MCMRXP3
H9	CVDD		K5	$\overline{\text{EMIFCE0}}$		L25	VSS
H10	VSS		K6	VSS		M1	EMIFA07
H11	CVDD		K7	DVDD18		M1	UPPXD07 †
H12	VSS		K8	VSS		M2	EMIFA06
H13	CVDD		K9	CVDD1		M2	UPPXD06 †

Copyright © 2012–2016, Texas Instruments Incorporated

Table 4-5. Terminal Functions — By Ball Number (continued)

BALL NUMBER	SIGNAL NAME		BALL NUMBER	SIGNAL NAME		BALL NUMBER	SIGNAL NAME
M3	EMIFA01		N21	MCMTXN1		R8	VSS
M3	UPPXD01 †		N22	MCMTXP0		R9	VSS
M4	EMIFWAIT1		N23	VSS		R10	CVDD
M4	UPP2XTXCLK †		N24	MCMRXP0		R11	VSS
M5	$\overline{\text{EMIFCE3}}$		N25	MCMRXP1		R12	CVDD
M6	VSS		P1	EMIFA12		R13	VSS
M7	DVDD18		P1	UPPXD12 †		R14	CVDD
M8	VSS		P2	EMIFA11		R15	VSS
M9	CVDD		P2	UPPXD11 †		R16	CVDD
M10	VSS		P3	EMIFA09		R17	VSS
M11	CVDD		P3	UPPXD09 †		R18	CVDD
M12	VSS		P4	EMIFA05		R19	VSS
M13	CVDD		P4	UPPXD05 †		R20	DVDD18
M14	VSS		P5	EMIFA03		R21	GPIO07
M15	CVDD		P5	UPPXD03 †		R21	BOOTMODE06 †
M16	VSS		P6	VSS		R22	VSS
M17	CVDD		P7	DVDD18		R23	GPIO02
M18	VSS		P8	VSS		R23	BOOTMODE01 †
M19	VDDT1		P9	CVDD		R24	VSS
M20	VDDR1		P10	VSS		R25	GPIO01
M21	MCMTXP1		P11	CVDD		R25	BOOTMODE00 †
M22	VSS		P12	VSS		T1	EMIFA19
M23	VSS		P13	CVDD		T1	UPP_CH0_WAIT †
M24	VSS		P14	VSS		T2	VSS
M25	MCMRXN1		P15	CVDD		T3	DVDD18
N1	EMIFA10		P16	VSS		T4	EMIFA18
N1	UPPXD10 †		P17	CVDD		T4	UPP_CH0_ENABLE †
N2	EMIFA08		P18	VSS		T5	EMIFA20
N2	UPPXD08 †		P19	CVDD		T5	UPP_CH1_CLK †
N3	DVDD18		P20	VSS		T6	VSS
N4	VSS		P21	VSS		T7	DVDD18
N5	EMIFWAIT0		P22	MCMTXN0		T8	VSS
N6	DVDD18		P23	VSS		T9	CVDD1
N7	VSS		P24	MCMRXN0		T10	VSS
N8	CVDD		P25	VSS		T11	CVDD
N9	VSS		R1	EMIFA17		T12	VSS
N10	CVDD		R1	UPP_CH0_START †		T13	CVDD
N11	VSS		R2	EMIFA16		T14	VSS
N12	CVDD		R2	UPP_CH0_CLK †		T15	CVDD
N13	VSS		R3	EMIFA14		T16	VSS
N14	CVDD		R3	UPPXD14 †		T17	CVDD1
N15	VSS		R4	EMIFA15		T18	VSS
N16	CVDD		R4	UPPXD15 †		T19	DVDD18
N17	VSS		R5	EMIFA13		T20	VSS
N18	CVDD		R5	UPPXD13 †		T21	GPIO12
N19	VSS		R6	DVDD18		T21	BOOTMODE11 †
N20	VDDT1		R7	VSS		T22	GPIO06

Copyright © 2012–2016, Texas Instruments Incorporated

Table 4-5. Terminal Functions — By Ball Number (continued)

BALL NUMBER	SIGNAL NAME		BALL NUMBER	SIGNAL NAME		BALL NUMBER	SIGNAL NAME
T22	BOOTMODE05 †		V3	UPPD04 †		W16	DVDD18
T23	GPIO04		V4	EMIFD05		W17	VSS
T23	BOOTMODE03 †		V4	UPPD05 †		W18	DVDD18
T24	DVDD18		V5	EMIFD07		W19	VSS
T25	GPIO00		V5	UPPD07 †		W20	DVDD18
T25	LENDIAN †		V6	VSS		W21	GPIO14 †
U1	EMIFA21		V7	DVDD18		W21	PCIESSMODE0 †
U1	UPP_CH1_START †		V8	VSS		W22	EMU08
U2	EMIFA22		V9	CVDD		W23	EMU03
U2	UPP_CH1_ENABLE †		V10	VSS		W24	EMU04
			V11	CVDD		W25	EMU02
U3	EMIFA23		V12	VSS		Y1	EMIFD09
U3	UPP_CH1_WAIT †		V13	CVDD		Y1	UPPD09 †
U4	EMIFD00		V14	VSS		Y2	EMIFD11
U4	UPPD00 †		V15	CVDD		Y2	UPPD11 †
U5	EMIFD01		V16	VSS		Y3	DVDD18
U5	UPPD01 †		V17	CVDD		Y4	RSV13
U6	DVDD18		V18	VSS		Y5	RSV12
U7	VSS		V19	DVDD18		Y6	VSS
U8	CVDD1		V20	VSS		Y7	VDDT2
U9	VSS		V21	GPIO15		Y8	VSS
U10	CVDD		V21	PCIESSMODE1 †		Y9	VDDT2
U11	VSS		V22	GPIO13		Y10	VSS
U12	CVDD		V22	BOOTMODE12 †		Y11	VDDT2
U13	VSS		V23	GPIO10		Y12	VSS
U14	CVDD		V23	BOOTMODE09 †		Y13	DVDD18
U15	VSS		V24	EMU00		Y14	VSS
U16	CVDD		V25	EMU01		Y15	AVDDA1
U17	VSS		W1	EMIFD06		Y16	VSS
U18	CVDD1		W1	UPPD06 †		Y17	DVDD18
U19	VSS		W2	EMIFD08		Y18	$\overline{\text{POR}}$
U20	DVDD18		W2	UPPD08 †		Y19	RSV08
U21	GPIO11		W3	VSS		Y20	CLKX0
U21	BOOTMODE10 †		W4	EMIFD10		Y21	EMU18
U22	GPIO08		W4	UPPD10 †		Y22	EMU09
U22	BOOTMODE07 †		W5	EMIFD12		Y23	EMU07
U23	GPIO09		W5	UPPD12 †		Y24	EMU06
U23	BOOTMODE08 †		W6	DVDD18		Y25	EMU05
U24	GPIO05		W7	VSS		AA1	EMIFD13
U24	BOOTMODE04 †		W8	VDDT2		AA1	UPPD13 †
U25	GPIO03		W9	VSS		AA2	EMIFD15
U25	BOOTMODE02 †		W10	VDDT2		AA2	UPPD15 †
V1	EMIFD02		W11	VSS		AA3	VDDR3
V1	UPPD02 †		W12	VDDT2		AA4	VSS
V2	EMIFD03		W13	VSS		AA5	VDDR4
V2	UPPD03 †		W14	DVDD18		AA6	VSS
V3	EMIFD04		W15	VSS		AA7	RSV17

Copyright © 2012–2016, Texas Instruments Incorporated

Table 4-5. Terminal Functions — By Ball Number (continued)

BALL NUMBER	SIGNAL NAME		BALL NUMBER	SIGNAL NAME		BALL NUMBER	SIGNAL NAME
AA8	VSS		AB22	EMU15		AD15	UARTRTS1
AA9	VDDR2		AB23	DVDD18		AD15	GPIO27 †
AA10	VSS		AB24	VSS		AD16	VSS
AA11	RSV18		AB25	EMU12		AD17	TCK
AA12	SPISCS0		AC1	VSS		AD18	CORECLKP
AA12	GPIO28 †		AC2	SGMII0TXN		AD19	TDO
AA13	SPICLK		AC3	SGMII0TXP		AD20	TIMI0
AA14	SPISCS1		AC4	VSS		AD20	GPIO16 †
AA14	GPIO29 †		AC5	RIOTXN2		AD20	PCIESSEN ‡
AA15	UARTTXD		AC6	RIOTXP2		AD21	DR1
AA15	GPIO21 †		AC7	VSS		AD22	FSR1
AA16	MDCLK		AC8	RIOTXP0		AD23	CLKR1
AA17	SCL		AC9	RIOTXN0		AD24	FSR0
AA18	SDA		AC10	VSS		AD25	EMU16
AA19	SYSCLKOUT		AC11	PCIETXP0		AE1	VSS
AA20	FSX0		AC12	PCIETXN0		AE2	SGMII0RXN
AA21	CLKR0		AC13	VSS		AE3	SGMII0RXP
AA22	RSV01		AC14	UARTRXD1		AE4	VSS
AA23	EMU14		AC14	GPIO24 †		AE5	RIORXN2
AA24	EMU10		AC15	UARTTXD1		AE6	RIORXP2
AA25	EMU11		AC15	GPIO25 †		AE7	VSS
AB1	EMIFD14		AC16	DVDD18		AE8	RIORXP0
AB1	UPPD14 †		AC17	UARTCTS		AE9	RIORXN0
AB2	VSS		AC17	GPIO22 †		AE10	VSS
AB3	RSV19		AC18	RSV04		AE11	PCIERXP0
AB4	RIOTXN3		AC19	TIMO0		AE12	PCIERXN0
AB5	RIOTXP3		AC19	GPIO18 †		AE13	VSS
AB6	VSS		AC20	DVDD18		AE14	SRIOSGMIICLKN
AB7	RIOTXN1		AC21	CLKS1		AE15	PCIECLKN
AB8	RIOTXP1		AC22	DX0		AE16	UARTCTS1
AB9	VSS		AC23	CLKS0		AE16	GPIO26 †
AB10	PCIETXP1		AC24	EMU17		AE17	TDI
AB11	PCIETXN1		AC25	EMU13		AE18	TMS
AB12	VSS		AD1	VSS		AE19	CORECLKN
AB13	SPIDOUT		AD2	VSS		AE20	TIMO1
AB13	GPIO31 †		AD3	VSS		AE20	GPIO19 †
AB14	SPIDIN		AD4	RIORXN3		AE21	TIMI1
AB14	GPIO30 †		AD5	RIORXP3		AE21	GPIO17 †
AB15	UARTRXD		AD6	VSS		AE22	DX1
AB15	GPIO20 †		AD7	RIORXP1		AE23	FSX1
AB16	MDIO		AD8	RIORXN1		AE24	CLKX1
AB17	UARTRTS		AD9	VSS		AE25	VSS
AB17	GPIO23 †		AD10	PCIERXN1			
AB18	RSV05		AD11	PCIERXP1			
AB19	$\overline{\text{TRST}}$		AD12	VSS			
AB20	VSS		AD13	SRIOSGMIICLKP			
AB21	DR0		AD14	PCIECLKP			

Copyright © 2012–2016, Texas Instruments Incorporated

5 Specifications

5.1 Absolute Maximum Ratings[1][2]

over operating free-air temperature range (unless otherwise noted)

		MIN	MAX	UNIT
Supply voltage[3]	CVDD	-0.3	1.3	V
	CVDD1	-0.3	1.3	
	DVDD15	-0.3	2.45	
	DVDD18	-0.3	2.45	
	VREFSSTL	0.49 × DVDD15	0.51 × DVDD15	
	VDDT1, VDDT2	-0.3	1.3	
	VDDR1, VDDR2, VDDR3, VDDR4	-0.3	2.45	
	AVDDA1, AVDDA2	-0.3	2.45	
	VSS Ground		0	
Input voltage (V_I)	LVCMOS (1.8V)	-0.3	DVDD18+0.3	V
	DDR3	-0.3	2.45	
	I^2C	-0.3	2.45	
	LVDS	-0.3	DVDD18+0.3	
	LJCB	-0.3	1.3	
	SerDes	-0.3	CVDD1+0.3	
Output voltage (V_O)	LVCMOS (1.8V)	-0.3	DVDD18+0.3	V
	DDR3	-0.3	2.45	
	I^2C	-0.3	2.45	
	SerDes	-0.3	CVDD1+0.3	
Overshoot/undershoot[4]	LVCMOS (1.8V)	20% Overshoot/Undershoot for 20% of Signal Duty Cycle		
	DDR3			
	I^2C			
Storage temperature, T_{stg}		–65	150	°C

(1) Stresses beyond those listed under *Absolute Maximum Ratings* may cause permanent damage to the device. These are stress ratings only, and functional operation of the device at these or any other conditions beyond those indicated under *Recommended Operating Conditions* is not implied. Exposure to absolute-maximum-rated conditions for extended periods may affect device reliability.
(2) All voltage values are with respect to V_{SS}, unless otherwise noted.
(3) All voltage values are with respect to V_{SS}.
(4) Overshoot/Undershoot percentage relative to I/O operating values - for example the maximum overshoot value for 1.8-V LVCMOS signals is DVDD18 + 0.20 × DVDD18 and maximum undershoot value would be V_{SS} - 0.20 × DVDD18

5.2 ESD Ratings

			VALUE	UNIT
$V_{(ESD)}$	Electrostatic discharge[1]	Human-body model (HBM), per ANSI/ESDA/JEDEC JS-001[2]	±1000	V
		Charged-device model (CDM), per JEDEC specification JESD22-C101[3]	±250	

(1) Electrostatic discharge (ESD) to measure device sensitivity/immunity to damage caused by electrostatic discharges into the device.
(2) JEDEC document JEP155 states that 500-V HBM allows safe manufacturing with a standard ESD control process. Manufacturing with less than 500-V HBM is possible with the necessary precautions. Pins listed as ±1000 V may actually have higher performance.
(3) JEDEC document JEP157 states that 250-V CDM allows safe manufacturing with a standard ESD control process. Pins listed as ±250 V may actually have higher performance.

Copyright © 2012–2016, Texas Instruments Incorporated

5.3 Recommended Operating Conditions[1][2]

over operating free-air temperature range (unless otherwise noted)

			MIN	NOM	MAX	UNIT
CVDD	SR Core Supply	850MHz - Device	SRVnom[3] × 0.95	0.85-1.1	SRVnom × 1.05	V
		1000MHz - Device	SRVnom × 0.95	0.85-1.1	SRVnom × 1.05	
		1250MHZ - Device	SRVnom × 0.95	0.85-1.1	SRVnom × 1.05	
CVDD1	Core supply voltage for memory array		0.95	1	1.05	V
DVDD18	1.8-V supply I/O voltage		1.71	1.8	1.89	V
DVDD15	1.5-V supply I/O voltage		1.425	1.5	1.575	V
VREFSSTL	DDR3 reference voltage		0.49 × DVDD15	0.5 × DVDD15	0.51 × DVDD15	V
V_{DDRx}[4]	SerDes regulator supply		1.425	1.5	1.575	V
V_{DDAx}	PLL analog supply		1.71	1.8	1.89	V
V_{DDTx}	SerDes termination supply		0.95	1	1.05	V
V_{SS}	Ground		0	0	0	V
V_{IH}	High-level input voltage	LVCMOS (1.8 V)	0.65 × DVDD18			V
		I^2C	0.7 × DVDD18			
		DDR3 EMIF	VREFSSTL + 0.1			
V_{IL}	Low-level input voltage	LVCMOS (1.8 V)			0.35 × DVDD18	V
		DDR3 EMIF	-0.3		VREFSSTL - 0.1	
		I^2C			0.3 × DVDD18	
T_C	Operating case temperature	Commercial	0		85	°C
		Extended	-40		100	

(1) All differential clock inputs comply with the LVDS Electrical Specification, IEEE 1596.3-1996 and all SERDES I/Os comply with the XAUI Electrical Specification, IEEE 802.3ae-2002.
(2) All SERDES I/Os comply with the XAUI Electrical Specification, IEEE 802.3ae-2002.
(3) SRVnom refers to the unique SmartReflex core supply voltage set from the factory for each individual device.
(4) Where x = 1, 2, 3, 4... to indicate all supplies of the same kind.

5.4 Power Consumption Summary

Power consumption on these devices depends on several operating parameters such as operating voltage, operating frequency, and temperature. Power consumption also varies by end applications that determine the overall processor, CPU, and peripheral activity. For more specific power consumption details, see C6654 and C6652 power consumption model. This model contains a spreadsheet for estimating power based on parameters that closely resemble the end application to generate a realistic estimate of power consumption on this device based on use-case and operating conditions.

Copyright © 2012–2016, Texas Instruments Incorporated

5.5 Electrical Characteristics

Over Recommended Ranges of Supply Voltage and Operating Case Temperature (Unless Otherwise Noted)

PARAMETER			TEST CONDITIONS(1)	MIN	NOM	MAX	UNIT
V_{OH}	High-level output voltage	LVCMOS (1.8 V)	$I_O = I_{OH}$	DVDD18 - 0.45			V
		DDR3		DVDD15 - 0.4			
		I^2C(2)					
V_{OL}	Low-level output voltage	LVCMOS (1.8 V)	$I_O = I_{OL}$			0.45	V
		DDR3				0.4	
		I^2C	I_O = 3 mA, pulled up to 1.8 V			0.4	
I_I(3)	Input current [DC]	LVCMOS (1.8 V)	No IPD/IPU	-5		5	µA
			Internal pullup	50	100	170(4)	
			Internal pulldown	-170	-100	-50	
		I^2C	0.1 × DVDD18 V < V_I < 0.9 × DVDD18 V	-10		10	
I_{OH}	High-level output current [DC]	LVCMOS (1.8 V)				-6	mA
		DDR3				-8	
		I^2C(5)					
I_{OL}	Low-level output current [DC]	LVCMOS (1.8 V)				6	mA
		DDR3				8	
		I^2C				3	
I_{OZ}(6)	Off-state output current [DC]	LVCMOS (1.8 V)		-2		2	µA
		DDR3		-2		2	
		I^2C		-2		2	

(1) For test conditions shown as MIN, MAX, or TYP, use the appropriate value specified in the recommended operating conditions table.
(2) I^2C uses open collector I/Os and does not have a V_{OH} Minimum.
(3) I_I applies to input-only pins and bidirectional pins. For input-only pins, I_I indicates the input leakage current. For bidirectional pins, I_I includes input leakage current and off-state (Hi-Z) output leakage current.
(4) For $\overline{\text{RESETSTAT}}$, max DC input current is 300 µA.
(5) I^2C uses open collector I/Os and does not have a I_{OH} Maximum.
(6) I_{OZ} applies to output-only pins, indicating off-state (Hi-Z) output leakage current.

5.6 Thermal Resistance Characteristics for [CZH/GZH] Package

NAME	DESCRIPTION	°C/W(1) (2)
$R\Theta_{JC}$	Junction-to-case	0.284
$R\Theta_{JB}$	Junction-to-board	4.200

(1) °C/W = degrees Celsius per watt.
(2) These values are based on a JEDEC-defined 2S2P system (with the exception of the Theta JC [$R\Theta_{JC}$] value, which is based on a JEDEC-defined 1S0P system) and will change based on environment as well as application. For more information, see these EIA/JEDEC standards:
- JESD51-2, *Integrated Circuits Thermal Test Method Environmental Conditions - Natural Convection (Still Air)*
- JESD51-3, *Low Effective Thermal Conductivity Test Board for Leaded Surface Mount Packages*
- JESD51-7, *High Effective Thermal Conductivity Test Board for Leaded Surface Mount Packages*
- JESD51-9, *Test Boards for Area Array Surface Mount Package Thermal Measurements*

Power dissipation of 2 W and an ambient temperature of 70ºC is assumed.

Copyright © 2012–2016, Texas Instruments Incorporated

5.7 Timing and Switching Characteristics

5.7.1 SmartReflex

Increasing the device complexity increases its power consumption and with the smaller transistor structures responsible for higher achievable clock rates and increased performance, comes an inevitable penalty, increasing the leakage currents. Leakage currents are present in any active circuit, independently of clock rates and usage scenarios. This static power consumption is mainly determined by transistor type and process technology. Higher clock rates also increase dynamic power, the power used when transistors switch. The dynamic power depends mainly on a specific usage scenario, clock rates, and I/O activity.

TI's SmartReflex technology is used to decrease both static and dynamic power consumption while maintaining the device performance. SmartReflex in the C665x device is a feature that allows the core voltage to be optimized based on the process corner of the device. This requires a voltage regulator for each device.

To ensure maximizing performance and minimizing power consumption of the device, SmartReflex is required to be implemented whenever the C665x device is used. The voltage selection is done using four VCNTL pins which are used to select the output voltage of the core voltage regulator.

For information on implementation of SmartReflex see the *Power Management for KeyStone Devices* application report and the Hardware Design Guide for KeyStone Devices.

Table 5-1. SmartReflex 4-Pin VID Interface Switching Characteristics

(See Figure 5-1.)

NO.	PARAMETER		MIN	MAX	UNIT
1	td(VCNTL[2:0]-VCNTL[3])	Delay Time - VCNTL[2:0] valid after VCNTL[3] low		300.00	ns
2	toh(VCNTL[3] -VCNTL[2:0])	Output Hold Time - VCNTL[2:0] valid after VCNTL[3] low	0.07	172020C (1)	ms
3	td(VCNTL[2:0]-VCNTL[3])	Delay Time - VCNTL[2:0] valid after VCNTL[3] high		300.00	ns
4	toh(VCNTL[3] -VCNTL[2:0])	Output Hold Time - VCNTL[2:0] valid after VCNTL[3] high	0.07	172020C	ms
5	VCNTL being valid to CVDD being switched to SmartReflex Voltage (2)			10	ms

(1) C = 1/SYSCLK1 frequency (see Figure 6-5) in ms
(2) SmartReflex voltage must be set before execution of application code

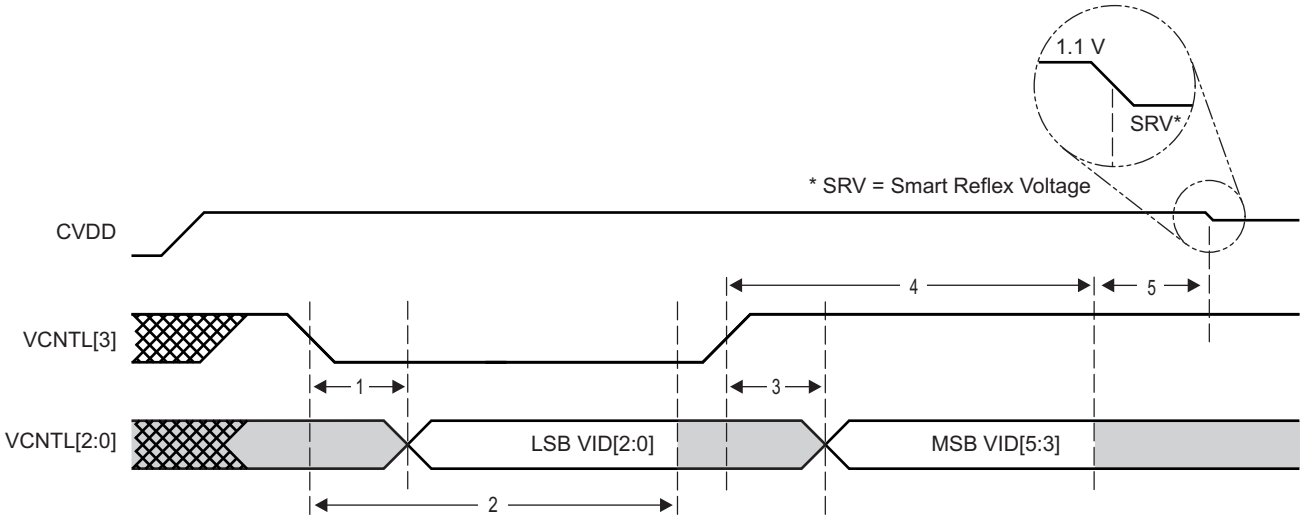

Figure 5-1. SmartReflex 4-Pin VID Interface Timing

Copyright © 2012–2016, Texas Instruments Incorporated

5.7.2 Reset Electrical Data / Timing

Table 5-2. Reset Timing Requirements(1)

(See Figure 5-2 and Figure 5-3.)

NO.			MIN	MAX	UNIT
		$\overline{\text{RESETFULL}}$ Pin Reset			
1	tw($\overline{\text{RESETFULL}}$)	Pulse width - Pulse width $\overline{\text{RESETFULL}}$ low	500C		ns
		Soft/Hard-Reset			
2	tw($\overline{\text{RESET}}$)	Pulse width - Pulse width $\overline{\text{RESET}}$ low	500C		ns

(1) C = 1 / CORECLK(N|P) frequency in ns.

Table 5-3. Reset Switching Characteristics Over Recommended Operating Conditions(1)

(See Figure 5-2 and Figure 5-3.)

NO.	PARAMETER		MIN	MAX	UNIT
		$\overline{\text{RESETFULL}}$ Pin Reset			
3	td($\overline{\text{RESETFULL}}$H-$\overline{\text{RESETSTAT}}$H)	Delay time - $\overline{\text{RESETSTAT}}$ high after $\overline{\text{RESETFULL}}$ high		50000C	ns
		Soft/Hard Reset			
4	td($\overline{\text{RESET}}$H-$\overline{\text{RESETSTAT}}$H)	Delay time - $\overline{\text{RESETSTAT}}$ high after $\overline{\text{RESET}}$ high		50000C	ns

(1) C = 1 / CORECLK(N|P) frequency in ns.

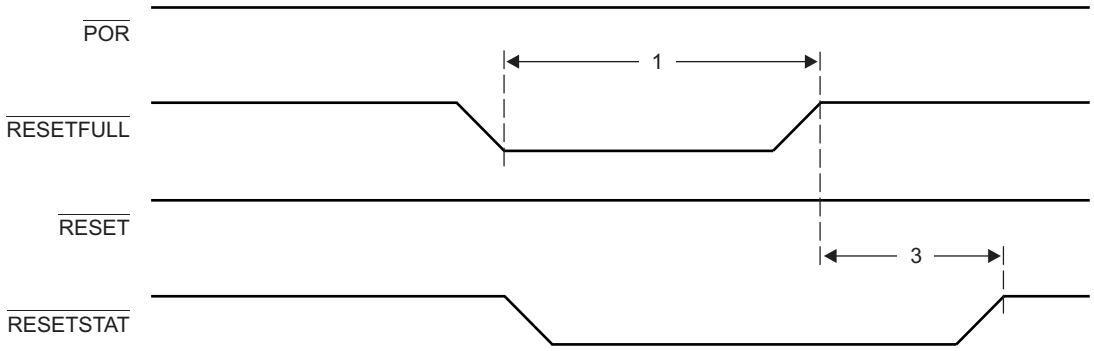

Figure 5-2. $\overline{\text{RESETFULL}}$ Reset Timing

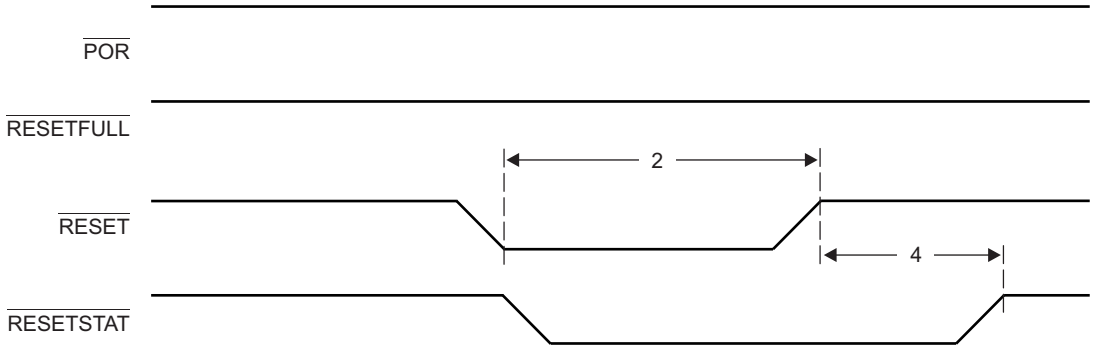

Figure 5-3. Soft/Hard-Reset Timing

Table 5-4. Boot Configuration Timing Requirements(1)

(See Figure 5-4.)

NO.		MIN	MAX	UNIT
1	tsu(GPIOn-$\overline{\text{RESETFULL}}$) Setup time - GPIO valid before $\overline{\text{RESETFULL}}$ asserted	12C		ns
2	th($\overline{\text{RESETFULL}}$-GPIOn) Hold time - GPIO valid after $\overline{\text{RESETFULL}}$ asserted	12C		ns

(1) C = 1/SYSCLK1 frequency in ns.

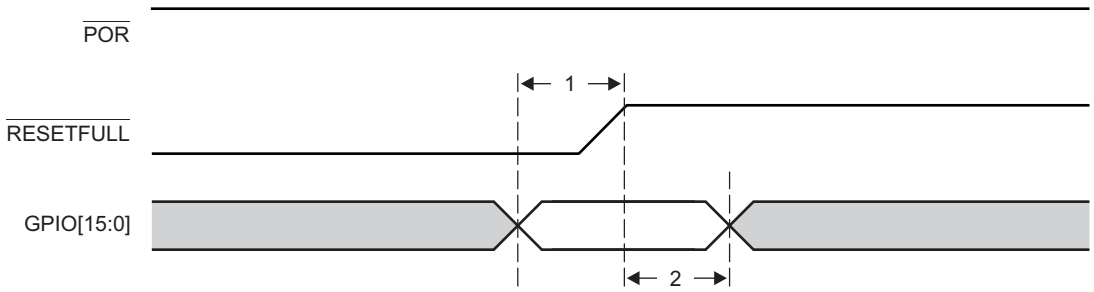

Figure 5-4. Boot Configuration Timing

5.7.3 Main PLL Stabilization, Lock, and Reset Times

The PLL stabilization time is the amount of time that must be allotted for the internal PLL regulators to become stable after device power up. The PLL should not be operated until this stabilization time has elapsed.

The PLL reset time is the amount of wait time needed when resetting the PLL (writing PLLRST = 1), in order for the PLL to properly reset, before bringing the PLL out of reset (writing PLLRST = 0). For the Main PLL reset time value, see Table 5-5.

The PLL lock time is the amount of time needed from when the PLL is taken out of reset (PLLRST = 1 with PLLEN = 0) to when to when the PLL controller can be switched to PLL mode (PLLEN = 1). The Main PLL lock time is given in Table 5-5.

Table 5-5. Main PLL Stabilization, Lock, and Reset Times

	MIN	TYP	MAX	UNIT
PLL stabilization time	100			µs
PLL lock time			500 ×(PLLD(1)+1) × C(2)	
PLL reset time	1000			ns

(1) PLLD is the value in PLLD bit fields of MAINPLLCTL0 register
(2) C = SYSCLK1(N|P) cycle time in ns.

Copyright © 2012–2016, Texas Instruments Incorporated

5.7.4 Main PLL Controller/SRIO/HyperLink/PCIe Clock Input Electrical Data/Timing

Table 5-6. Main PLL Controller/SRIO/HyperLink/PCIe Clock Input Timing Requirements

(See Figure 5-5 and Figure 5-6.)

NO.			MIN	MAX	UNIT
CORECLK[P:N]					
1	tc(CORCLKN)	Cycle time _ CORECLKN cycle time	3.2	25	ns
1	tc(CORECLKP)	Cycle time _ CORECLKP cycle time	3.2	25	ns
3	tw(CORECLKN)	Pulse width _ CORECLKN high	0.45*tc(CORECLKN)	0.55*tc(CORECLKN)	ns
2	tw(CORECLKN)	Pulse width _ CORECLKN low	0.45*tc(CORECLKN)	0.55*tc(CORECLKN)	ns
2	tw(CORECLKP)	Pulse width _ CORECLKP high	0.45*tc(CORECLKP)	0.55*tc(CORECLKP)	ns
3	tw(CORECLKP)	Pulse width _ CORECLKP low	0.45*tc(CORECLKP)	0.55*tc(CORECLKP)	ns
4	tr(CORECLK_250mv)	Transition time _ CORECLK differential rise time (250mV)	50	350	ps
4	tf(CORECLK_250mv)	Transition time _ CORECLK differential fall time (250 mV)	50	350	ps
5	tj(CORECLKN)	Jitter, peak_to_peak _ periodic CORECLKN		100	ps
5	tj(CORECLKP)	Jitter, peak_to_peak _ periodic CORECLKP		100	ps
SRIOSGMIICLK[P:N]					
1	tc(SRIOSGMIICLKN)	Cycle time _ SRIOSGMIICLKN cycle time	3.2 or 4 or 6.4		ns
1	tc(SRIOSGMIICLKP)	Cycle time _ SRIOSGMIICLKP cycle time	3.2 or 4 or 6.4		ns
3	tw(SRIOSGMIICLKN)	Pulse with _ SRIOSGMIICLKN high	0.45*tc(SRIOSGMIICLKN)	0.55*tc(SRIOSGMIICLKN)	ns
2	tw(SRIOSGMIICLKN)	Pulse width _ SRIOSGMIICLKN low	0.45*tc(SRIOSGMIICLKN)	0.55*tc(SRIOSGMIICLKN)	ns
2	tw(SRIOSGMIICLKP)	Pulse width _ SRIOSGMIICLKP high	0.45*tc(SRIOSGMIICLKP)	0.55*tc(SRIOSGMIICLKP)	ns
3	tw(SRIOSGMIICLKP)	Pulse width _ SRIOSGMIICLKP low	0.45*tc(SRIOSGMIICLKP)	0.55*tc(SRIOSGMIICLKP)	ns
4	tr(SRIOSGMIICLK_250mv)	Transition time _ SRIOSGMIICLK differential rise time (250 mV)	50	350	ps
4	tf(SRIOSGMIICLK_250mv)	Transition time _ SRIOSGMIICLK differential fall time (250 mV)	50	350	ps
5	tj(SRIOSGMIICLKN)	Jitter, peak_to_peak _ periodic SRIOSGMIICLKN		4	ps,RMS
5	tj(SRIOSGMIICLKP)	Jitter, peak_to_peak _ periodic SRIOSGMIICLKP		4	ps,RMS
5	tj(SRIOSGMIICLKN)	Jitter, peak_to_peak _ periodic SRIOSGMIICLKN (SRIO not used)		8	ps,RMS
5	tj(SRIOSGMIICLKP)	Jitter, peak_to_peak _ periodic SRIOSGMIICLKP (SRIO not used)		8	ps,RMS
HyperLinkCLK[P:N]					
1	tc(MCMCLKN)	Cycle time _ MCMCLKN cycle time	3.2	6.4	ns
1	tc(MCMCLKP)	Cycle time _ MCMCLKP cycle time	3.2	6.4	ns
3	tw(MCMCLKN)	Pulse width _ MCMCLKN high	0.45*tc(MCMCLKN)	0.55*tc(MCMCLKN)	ns
2	tw(MCMCLKN)	Pulse width _ MCMCLKN low	0.45*tc(MCMCLKN)	0.55*tc(MCMCLKN)	ns
2	tw(MCMCLKP)	Pulse width _ MCMCLKP high	0.45*tc(MCMCLKP)	0.55*tc(MCMCLKP)	ns
3	tw(MCMCLKP)	Pulse width _ MCMCLKP low	0.45*tc(MCMCLKP)	0.55*tc(MCMCLKP)	ns
4	tr(MCMCLK_250mv)	Transition time _ MCMCLK differential rise time (250mV)	50	350	ps
4	tf(MCMCLK_250mv)	Transition time _ MCMCLK differential fall time (250mV)	50	350	ps
5	tj(MCMCLKN)	Jitter, peak_to_peak _ periodic MCMCLKN		4	ps,RMS
5	tj(MCMCLKP)	Jitter, peak_to_peak _ periodic MCMCLKP		4	ps,RMS
PCIECLK[P:N]					
1	tc(PCIECLKN)	Cycle time _ PCIECLKN cycle time	3.2	10	ns
1	tc(PCIECLKP)	Cycle time _ PCIECLKP cycle time	3.2	10	ns
3	tw(PCIECLKN)	Pulse width _ PCIECLKN high	0.45*tc(PCIECLKN)	0.55*tc(PCIECLKN)	ns
2	tw(PCIECLKN)	Pulse width _ PCIECLKN low	0.45*tc(PCIECLKN)	0.55*tc(PCIECLKN)	ns
2	tw(PCIECLKP)	Pulse width _ PCIECLKP high	0.45*tc(PCIECLKP)	0.55*tc(PCIECLKP)	ns
3	tw(PCIECLKP)	Pulse width _ PCIECLKP low	0.45*tc(PCIECLKP)	0.55*tc(PCIECLKP)	ns

Copyright © 2012–2016, Texas Instruments Incorporated

Table 5-6. Main PLL Controller/SRIO/HyperLink/PCIe Clock Input Timing Requirements (continued)

(See Figure 5-5 and Figure 5-6.)

NO.			MIN	MAX	UNIT
4	tr(PCIECLK_250mv)	Transition time _ PCIECLK differential rise time (250 mV)	50	350	ps
4	tf(PCIECLK_250mv)	Transition time _ PCIECLK differential fall time (250 mV)	50	350	ps
5	tj(PCIECLKN)	Jitter, peak_to_peak _ periodic PCIECLKN		4	ps,RMS
5	tj(PCIECLKP)	Jitter, peak_to_peak _ periodic PCIECLKP		4	ps,RMS

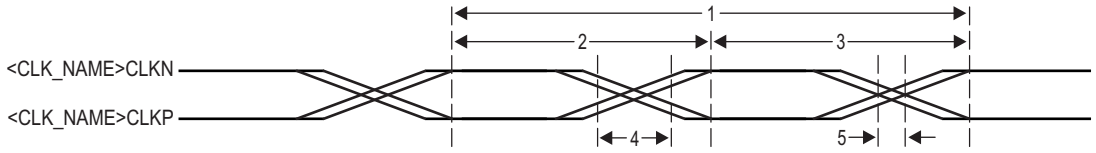

Figure 5-5. Main PLL Controller/SRIO/HyperLink/PCIe Clock Input Timing

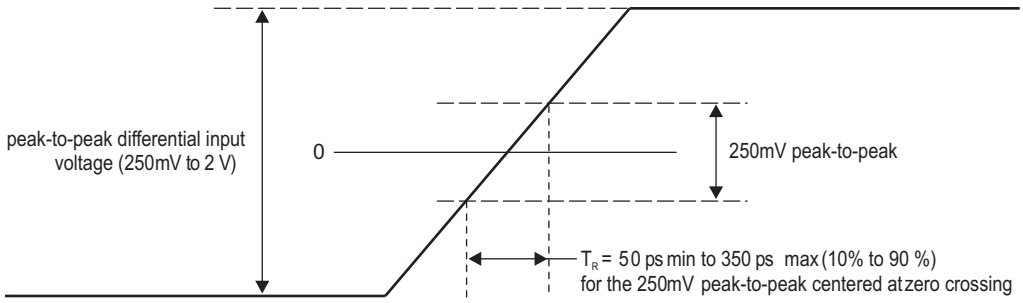

Figure 5-6. Main PLL Clock Input Transition Time

5.7.5 DDR3 PLL Input Clock Electrical Data/Timing

Table 5-7. DDR3 PLL DDRSYSCLK1(N|P) Timing Requirements

(See Figure 5-7 and Figure 5-6.)

NO			MIN	MAX	UNIT
		DDRCLK[P:N]			
1	tc(DDRCLKN)	Cycle time _ DDRCLKN cycle time	3.2	25	ns
1	tc(DDRCLKP)	Cycle time _ DDRCLKP cycle time	3.2	25	ns
3	tw(DDRCLKN)	Pulse width _ DDRCLKN high	0.45*tc(DDRCLKN)	0.55*tc(DDRCLKN)	ns
2	tw(DDRCLKN)	Pulse width _ DDRCLKN low	0.45*tc(DDRCLKN)	0.55*tc(DDRCLKN)	ns
2	tw(DDRCLKP)	Pulse width _ DDRCLKP high	0.45*tc(DDRCLKP)	0.55*tc(DDRCLKP)	ns
3	tw(DDRCLKP)	Pulse width _ DDRCLKP low	0.45*tc(DDRCLKP)	0.55*tc(DDRCLKP)	ns
4	tr(DDRCLK_250mv)	Transition time _ DDRCLK differential rise time (250 mV)	50	350	ps
4	tf(DDRCLK_250mv)	Transition time _ DDRCLK differential fall time (250 mV)	50	350	ps
5	tj(DDRCLKN)	Jitter, peak_to_peak _ periodic DDRCLKN		0.025*tc(DDRCLKN)	ps
5	tj(DDRCLKP)	Jitter, peak_to_peak _ periodic DDRCLKP		0.025*tc(DDRCLKP)	ps

Copyright © 2012–2016, Texas Instruments Incorporated

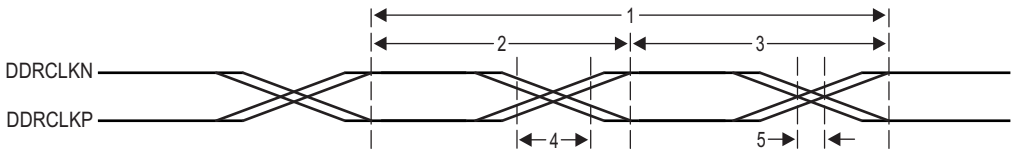

Figure 5-7. DDR3 PLL DDRCLK Timing

5.7.6 External Interrupts Electrical Data/Timing

Table 5-8. NMI and Local Reset Timing Requirements (1)

(See Figure 5-8.)

NO.			MIN	MAX	UNIT
1	tsu($\overline{\text{LRESET}}$-$\overline{\text{LRESETNMIENL}}$)	Setup Time - $\overline{\text{LRESET}}$ valid before $\overline{\text{LRESETNMIEN}}$ low	12*P		ns
1	tsu($\overline{\text{NMI}}$-$\overline{\text{LRESETNMIENL}}$)	Setup Time - $\overline{\text{NMI}}$ valid before $\overline{\text{LRESETNMIEN}}$ low	12*P		ns
1	tsu(CORESELn-$\overline{\text{LRESETNMIENL}}$)	Setup Time - CORESEL[2:0] valid before $\overline{\text{LRESETNMIEN}}$ low	12*P		ns
2	th($\overline{\text{LRESETNMIENL}}$-$\overline{\text{LRESET}}$)	Hold Time - $\overline{\text{LRESET}}$ valid after $\overline{\text{LRESETNMIEN}}$ high	12*P		ns
2	th($\overline{\text{LRESETNMIENL}}$-$\overline{\text{NMI}}$)	Hold Time - $\overline{\text{NMI}}$ valid after $\overline{\text{LRESETNMIEN}}$ high	12*P		ns
2	th($\overline{\text{LRESETNMIENL}}$-CORESELn)	Hold Time - CORESEL[2:0] valid after $\overline{\text{LRESETNMIEN}}$ high	12*P		ns
3	tw($\overline{\text{LRESETNMIEN}}$)	Pulse Width - $\overline{\text{LRESETNMIEN}}$ low width	12*P		ns

(1) P = 1/SYSCLK1 clock frequency in ns.

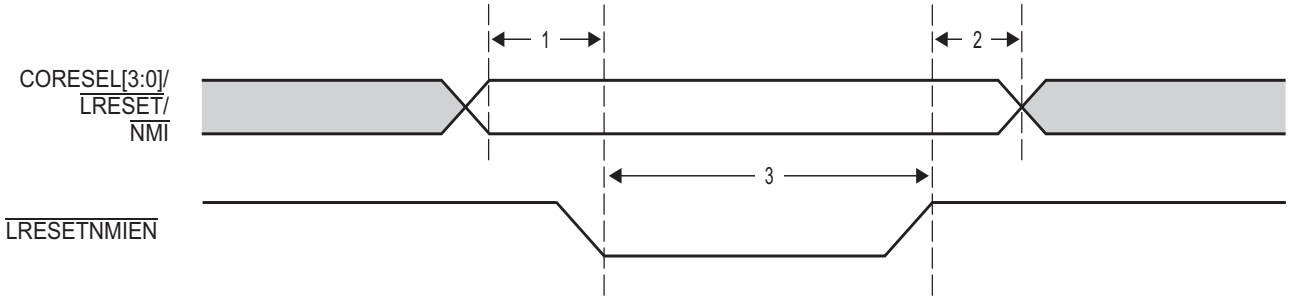

Figure 5-8. NMI and Local Reset Timing

5.7.7 DDR3 Memory Controller Electrical Data/Timing

The KeyStone DSP DDR3 Implementation Guidelines specifies a complete DDR3 interface solution as well as a list of compatible DDR3 devices. The DDR3 electrical requirements are fully specified in the DDR3 Jedec Specification JESD79-3C. TI has performed the simulation and system characterization to ensure all DDR3 interface timings in this solution are met; therefore, no electrical data/timing information is supplied here for this interface.

NOTE

TI supports only designs that follow the board design guidelines outlined in the application report.

Copyright © 2012–2016, Texas Instruments Incorporated

5.7.8 I²C Electrical Data/Timing

5.7.8.1 Inter-Integrated Circuits (I²C) Timing

Table 5-9. I²C Timing Requirements (1)

(See Figure 5-9.)

NO.			STANDARD MODE		FAST MODE		UNIT
			MIN	MAX	MIN	MAX	
1	$t_{c(SCL)}$	Cycle time, SCL	10		2.5		µs
2	$t_{su(SCLH-SDAL)}$	Setup time, SCL high before SDA low (for a repeated Start condition)	4.7		0.6		µs
3	$t_{h(SDAL-SCLL)}$	Hold time, SCL low after SDA low (for a Start and a repeated Start condition)	4		0.6		µs
4	$t_{w(SCLL)}$	Pulse duration, SCL low	4.7		1.3		µs
5	$t_{w(SCLH)}$	Pulse duration, SCL high	4		0.6		µs
6	$t_{su(SDAV-SCLH)}$	Setup time, SDA valid before SCL high	250		100 (2)		ns
7	$t_{h(SCLL-SDAV)}$	Hold time, SDA valid after SCL low (for I²C bus devices)	0 (3)	3.45	0 (3)	0.9 (4)	µs
8	$t_{w(SDAH)}$	Pulse duration, SDA high between Stop and Start conditions	4.7		1.3		µs
9	$t_{r(SDA)}$	Rise time, SDA		1000	20 + 0.1C_b (5)	300	ns
10	$t_{r(SCL)}$	Rise time, SCL		1000	20 + 0.1C_b (5)	300	ns
11	$t_{f(SDA)}$	Fall time, SDA		300	20 + 0.1C_b (5)	300	ns
12	$t_{f(SCL)}$	Fall time, SCL		300	20 + 0.1C_b (5)	300	ns
13	$t_{su(SCLH-SDAH)}$	Setup time, SCL high before SDA high (for Stop condition)	4		0.6		µs
14	$t_{w(SP)}$	Pulse duration, spike (must be suppressed)			0	50	ns
15	C_b (5)	Capacitive load for each bus line		400		400	pF

(1) The I²C pins SDA and SCL do not feature fail-safe I/O buffers. These pins could potentially draw current when the device is powered down

(2) A Fast-mode I²C-bus™ device can be used in a Standard-mode I²C-bus™ system, but the requirement tsu(SDA-SCLH) ≥ 250 ns must then be met. This will automatically be the case if the device does not stretch the LOW period of the SCL signal. If such a device does stretch the LOW period of the SCL signal, it must output the next data bit to the SDA line t_r max + $t_{su(SDA-SCLH)}$ = 1000 + 250 = 1250 ns (according to the Standard-mode I²C-Bus Specification) before the SCL line is released.

(3) A device must internally provide a hold time of at least 300 ns for the SDA signal (referred to the V_{IHmin} of the SCL signal) to bridge the undefined region of the falling edge of SCL.

(4) The maximum $t_{h(SDA-SCLL)}$ has only to be met if the device does not stretch the low period [$t_{w(SCLL)}$] of the SCL signal.

(5) C_b = total capacitance of one bus line in pF. If mixed with HS-mode devices, faster fall-times are allowed.

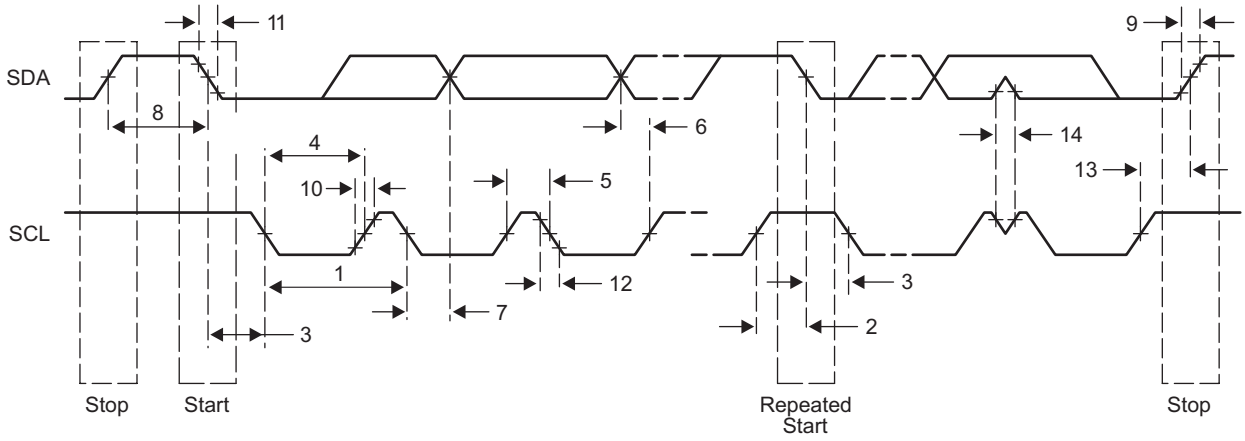

Figure 5-9. I²C Receive Timings

Copyright © 2012–2016, Texas Instruments Incorporated

Table 5-10. I²C Switching Characteristics(1)

(See Figure 5-10.)

NO.	PARAMETER		STANDARD MODE MIN	STANDARD MODE MAX	FAST MODE MIN	FAST MODE MAX	UNIT
16	$t_{c(SCL)}$	Cycle time, SCL	10		2.5		ms
17	$t_{su(SCLH-SDAL)}$	Setup time, SCL high to SDA low (for a repeated Start condition)	4.7		0.6		ms
18	$t_{h(SDAL-SCLL)}$	Hold time, SDA low after SCL low (for a Start and a repeated Start condition)	4		0.6		ms
19	$t_{w(SCLL)}$	Pulse duration, SCL low	4.7		1.3		ms
20	$t_{w(SCLH)}$	Pulse duration, SCL high	4		0.6		ms
21	$t_{d(SDAV-SDLH)}$	Delay time, SDA valid to SCL high	250		100		ns
22	$t_{v(SDLL-SDAV)}$	Valid time, SDA valid after SCL low (for I²C bus devices)	0		0	0.9	ms
23	$t_{w(SDAH)}$	Pulse duration, SDA high between Stop and Start conditions	4.7		1.3		ms
24	$t_{r(SDA)}$	Rise time, SDA		1000	$20 + 0.1C_b$(1)	300	ns
25	$t_{r(SCL)}$	Rise time, SCL		1000	$20 + 0.1C_b$(1)	300	ns
26	$t_{f(SDA)}$	Fall time, SDA		300	$20 + 0.1C_b$(1)	300	ns
27	$t_{f(SCL)}$	Fall time, SCL		300	$20 + 0.1C_b$(1)	300	ns
28	$t_{d(SCLH-SDAH)}$	Delay time, SCL high to SDA high (for Stop condition)	4		0.6		ms
29	C_p	Capacitance for each I²C pin		10		10	pF

(1) C_b = total capacitance of one bus line in pF. If mixed with HS-mode devices, faster fall-times are allowed.

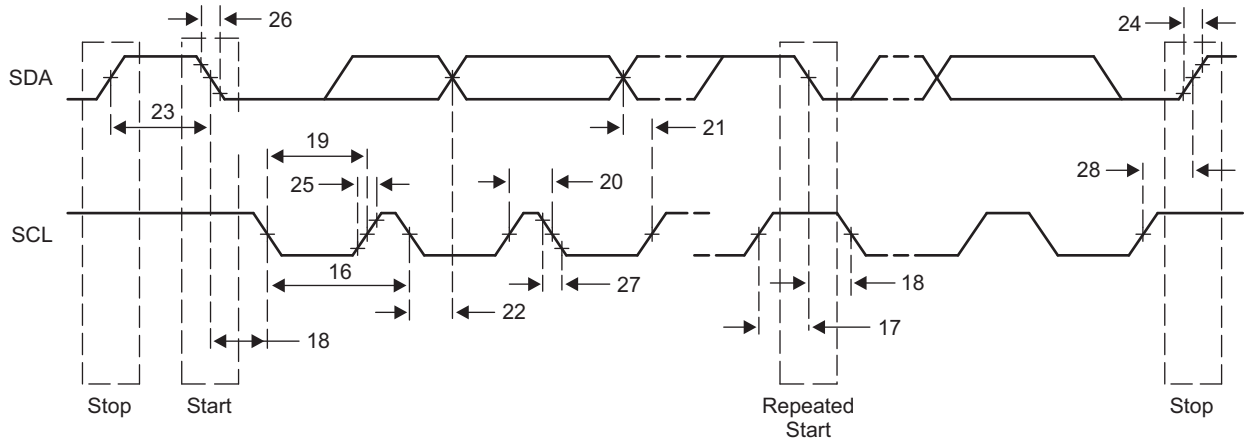

Figure 5-10. I²C Transmit Timings

5.7.9 SPI Peripheral

The serial peripheral interconnect (SPI) module provides an interface between the DSP and other SPI-compliant devices. The primary intent of this interface is to allow for connection to an SPI ROM for boot. The SPI module on the C665x is supported only in master mode. Additional chip-level components can also be included, such as temperature sensors or an I/O expander.

5.7.9.1 SPI Timing

Table 5-11. SPI Timing Requirements

(See Figure 5-11.)

NO.			MIN	MAX	UNIT
Master Mode Timing Diagrams — Base Timings for 3-Pin Mode					
7	tsu(SDI-SPC)	Input Setup Time, SPIDIN valid before receive edge of SPICLK. Polarity = 0 Phase = 0	2		ns
7	tsu(SDI-SPC)	Input Setup Time, SPIDIN valid before receive edge of SPICLK. Polarity = 0 Phase = 1	2		ns
7	tsu(SDI-SPC)	Input Setup Time, SPIDIN valid before receive edge of SPICLK. Polarity = 1 Phase = 0	2		ns
7	tsu(SDI-SPC)	Input Setup Time, SPIDIN valid before receive edge of SPICLK. Polarity = 1 Phase = 1	2		ns
8	th(SPC-SDI)	Input Hold Time, SPIDIN valid after receive edge of SPICLK. Polarity = 0 Phase = 0	5		ns
8	th(SPC-SDI)	Input Hold Time, SPIDIN valid after receive edge of SPICLK. Polarity = 0 Phase = 1	5		ns
8	th(SPC-SDI)	Input Hold Time, SPIDIN valid after receive edge of SPICLK. Polarity = 1 Phase = 0	5		ns
8	th(SPC-SDI)	Input Hold Time, SPIDIN valid after receive edge of SPICLK. Polarity = 1 Phase = 1	5		ns

Copyright © 2012–2016, Texas Instruments Incorporated

Table 5-12. SPI Switching Characteristics

(See Figure 5-11 and Figure 5-12.)

NO.	PARAMETER		MIN	MAX	UNIT
Master Mode Timing Diagrams — Base Timings for 3-Pin Mode					
1	tc(SPC)	Cycle Time, SPICLK, All Master Modes	3*P2 (1)		ns
2	tw(SPCH)	Pulse Width High, SPICLK, All Master Modes	0.5*tc - 1		ns
3	tw(SPCL)	Pulse Width Low, SPICLK, All Master Modes	0.5*tc - 1		ns
4	td(SDO-SPC)	Setup (Delay), initial data bit valid on SPIDOUT to initial edge on SPICLK. Polarity = 0, Phase = 0		5	ns
4	td(SDO-SPC)	Setup (Delay), initial data bit valid on SPIDOUT to initial edge on SPICLK. Polarity = 0, Phase = 1		5	ns
4	td(SDO-SPC)	Setup (Delay), initial data bit valid on SPIDOUT to initial edge on SPICLK. Polarity = 1, Phase = 0		5	ns
4	td(SDO-SPC)	Setup (Delay), initial data bit valid on SPIDOUT to initial edge on SPICLK. Polarity = 1, Phase = 1		5	ns
5	td(SPC-SDO)	Setup (Delay), subsequent data bits valid on SPIDOUT to initial edge on SPICLK.. Polarity = 0 Phase = 0		2	ns
5	td(SPC-SDO)	Setup (Delay), subsequent data bits valid on SPIDOUT to initial edge on SPICLK. Polarity = 0 Phase = 1		2	ns
5	td(SPC-SDO)	Setup (Delay), subsequent data bits valid on SPIDOUT to initial edge on SPICLK. Polarity = 1 Phase = 0		2	ns
5	td(SPC-SDO)	Setup (Delay), subsequent data bits valid on SPIDOUT to initial edge on SPICLK. Polarity = 1 Phase = 1		2	ns
6	toh(SPC-SDO)	Output hold time, SPIDOUT valid after receive edge of SPICLK except for final bit. Polarity = 0 Phase = 0	0.5*tc - 2		ns
6	toh(SPC-SDO)	Output hold time, SPIDOUT valid after receive edge of SPICLK except for final bit. Polarity = 0 Phase = 1	0.5*tc - 2		ns
6	toh(SPC-SDO)	Output hold time, SPIDOUT valid after receive edge of SPICLK except for final bit. Polarity = 1 Phase = 0	0.5*tc - 2		ns
6	toh(SPC-SDO)	Output hold time, SPIDOUT valid after receive edge of SPICLK except for final bit. Polarity = 1 Phase = 1	0.5*tc - 2		ns
Additional SPI Master Timings — 4-Pin Mode with Chip Select Option					
19	td(SCS-SPC)	Delay from $\overline{\text{SPISCS[n]}}$ active to first SPICLK. Polarity = 0 Phase = 0	2*P2 - 5	2*P2 + 5	ns
19	td(SCS-SPC)	Delay from $\overline{\text{SPISCS[n]}}$ active to first SPICLK. Polarity = 0 Phase = 1	0.5*tc + (2*P2) - 5	0.5*tc + (2*P2) + 5	ns
19	td(SCS-SPC)	Delay from $\overline{\text{SPISCS[n]}}$ active to first SPICLK. Polarity = 1 Phase = 0	2*P2 - 5	2*P2 + 5	ns
19	td(SCS-SPC)	Delay from $\overline{\text{SPISCS[n]}}$ active to first SPICLK. Polarity = 1 Phase = 1	0.5*tc + (2*P2) - 5	0.5*tc + (2*P2) + 5	ns
20	td(SPC-SCS)	Delay from final SPICLK edge to master deasserting $\overline{\text{SPISCS[n]}}$. Polarity = 0 Phase = 0	1*P2 - 5	1*P2 + 5	ns
20	td(SPC-SCS)	Delay from final SPICLK edge to master deasserting $\overline{\text{SPISCS[n]}}$. Polarity = 0 Phase = 1	0.5*tc + (1*P2) - 5	0.5*tc + (1*P2) + 5	ns
20	td(SPC-SCS)	Delay from final SPICLK edge to master deasserting $\overline{\text{SPISCS[n]}}$. Polarity = 1 Phase = 0	1*P2 - 5	1*P2 + 5	ns
20	td(SPC-SCS)	Delay from final SPICLK edge to master deasserting $\overline{\text{SPISCS[n]}}$. Polarity = 1 Phase = 1	0.5*tc + (1*P2) - 5	0.5*tc + (1*P2) + 5	ns
	tw(SCSH)	Minimum inactive time on $\overline{\text{SPISCS[n]}}$ pin between two transfers when $\overline{\text{SPISCS[n]}}$ is not held using the CSHOLD feature.	2*P2 - 5		ns

(1) P2 = 1/SYSCLK7

Copyright © 2012–2016, Texas Instruments Incorporated

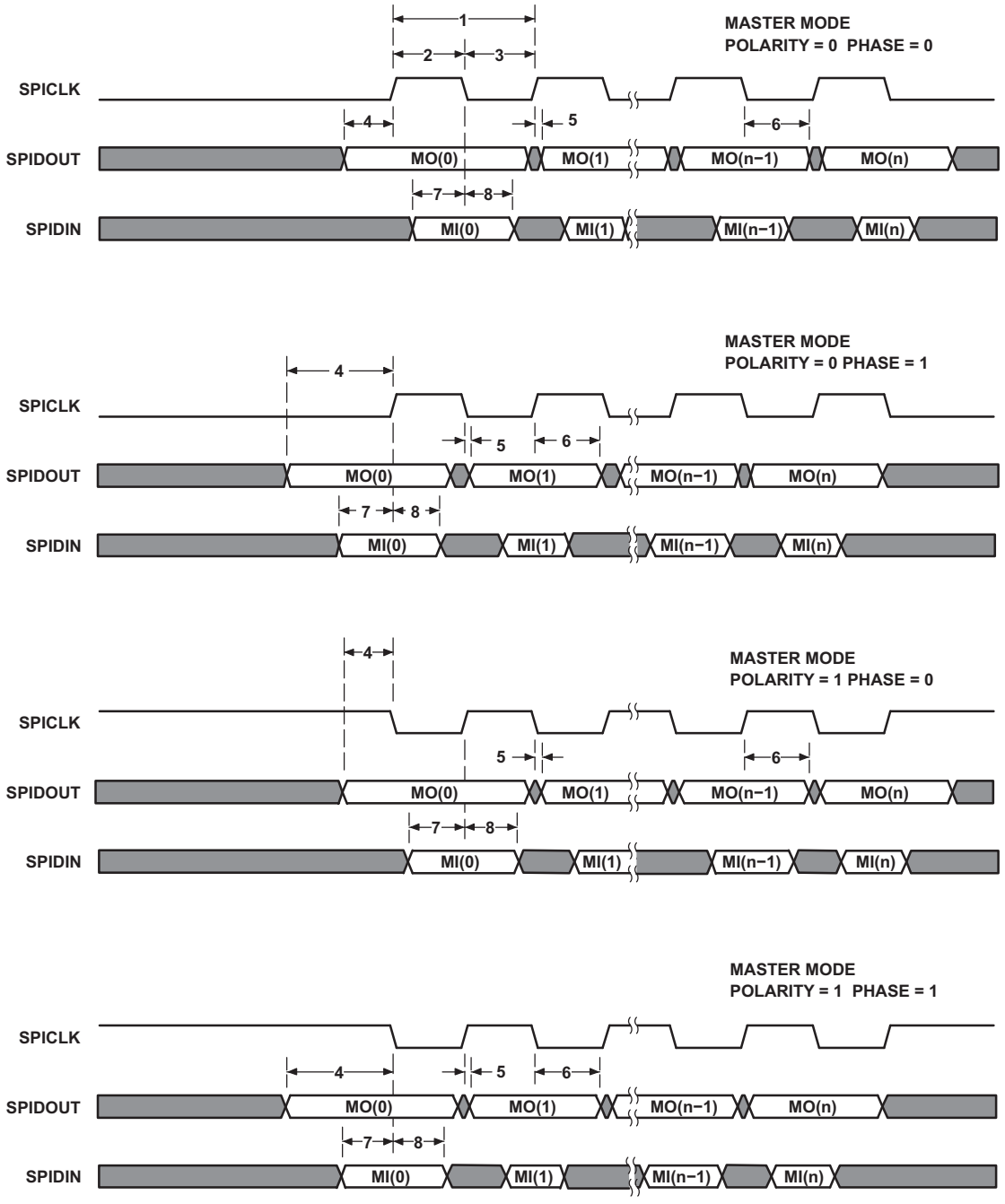

Figure 5-11. SPI Master Mode Timing Diagrams — Base Timings for 3-Pin Mode

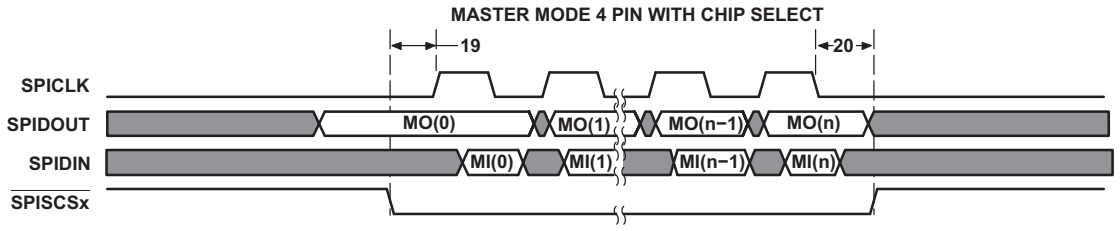

Figure 5-12. SPI Additional Timings for 4-Pin Master Mode With Chip Select Option

Copyright © 2012–2016, Texas Instruments Incorporated

5.7.10 HyperLink Electrical Data/Timing

Table 5-13, Table 5-14, Figure 5-13, Figure 5-14, and Figure 5-15 below describe the timing requirements and switching characteristics of HyperLink peripheral.

Table 5-13. HyperLink Peripheral Timing Requirements

See Figure 5-13, Figure 5-14, Figure 5-15

NO.			MIN	MAX	UNIT
FL Interface					
1	tc(MCMTXFLCLK)	Clock period - MCMTXFLCLK (C1)	6.4		ns
2	tw(MCMTXFLCLKH)	High pulse width - MCMTXFLCLK	0.4*C1	0.6*C1	ns
3	tw(MCMTXFLCLKL)	Low pulse width - MCMTXFLCLK	0.4*C1	0.6*C1	ns
6	tsu(MCMTXFLDAT-MCMTXFLCLKH)	Setup time - MCMTXFLDAT valid before MCMTXFLCLK high	1		ns
7	th(MCMTXFLCLKH-MCMTXFLDAT)	Hold time - MCMTXFLDAT valid after MCMTXFLCLK high	1		ns
6	tsu(MCMTXFLDAT-MCMTXFLCLKL)	Setup time - MCMTXFLDAT valid before MCMTXFLCLK low	1		ns
7	th(MCMTXFLCLKL-MCMTXFLDAT)	Hold time - MCMTXFLDAT valid after MCMTXFLCLK low	1		ns
PM Interface					
1	tc(MCMRXPMCLK)	Clock period - MCMRXPMCLK (C3)	6.4		ns
2	tw(MCMRXPMCLK)	High pulse width - MCMRXPMCLK	0.4*C3	0.6*C3	ns
3	tw(MCMRXPMCLK)	Low pulse width - MCMRXPMCLK	0.4*C3	0.6*C3	ns
6	tsu(MCMRXPMDAT-MCMRXPMCLKH)	Setup time - MCMRXPMDAT valid before MCMRXPMCLK high	1		ns
7	th(MCMRXPMCLKH-MCMRXPMDAT)	Hold time - MCMRXPMDAT valid after MCMRXPMCLK high	1		ns
6	tsu(MCMRXPMDAT-MCMRXPMCLKL)	Setup time - MCMRXPMDAT valid before MCMRXPMCLK low	1		ns
7	th(MCMRXPMCLKL-MCMRXPMDAT)	Hold time - MCMRXPMDAT valid after MCMRXPMCLK low	1		ns

Copyright © 2012–2016, Texas Instruments Incorporated

Table 5-14. HyperLink Peripheral Switching Characteristics

See Figure 5-13, Figure 5-14, Figure 5-15

NO.	PARAMETER		MIN	MAX	UNIT
FL Interface					
1	tc(MCMRXFLCLK)	Clock period - MCMRXFLCLK (C2)	6.4		ns
2	tw(MCMRXFLCLKH)	High pulse width - MCMRXFLCLK	0.4*C2	0.6*C2	ns
3	tw(MCMRXFLCLKL)	Low pulse width - MCMRXFLCLK	0.4*C2	0.6*C2	ns
4	tosu(MCMRXFLDAT-MCMRXFLCLKH)	Setup time - MCMRXFLDAT valid before MCMRXFLCLK high	0.25*C2-0.4		ns
5	toh(MCMRXFLCLKH-MCMRXFLDAT)	Hold time - MCMRXFLDAT valid after MCMRXFLCLK high	0.25*C2-0.4		ns
4	tosu(MCMRXFLDAT-MCMRXFLCLKL)	Setup time - MCMRXFLDAT valid before MCMRXFLCLK low	0.25*C2-0.4		ns
5	toh(MCMRXFLCLKL-MCMRXFLDAT)	Hold time - MCMRXFLDAT valid after MCMRXFLCLK low	0.25*C2-0.4		ns
PM Interface					
1	tc(MCMTXPMCLK)	Clock period - MCMTXPMCLK (C4)	6.4		ns
2	tw(MCMTXPMCLK)	High pulse width - MCMTXPMCLK	0.4*C4	0.6*C4	ns
3	tw(MCMTXPMCLK)	Low pulse width - MCMTXPMCLK	0.4*C4	0.6*C4	ns
4	tosu(MCMTXPMDAT-MCMTXPMCLKH)	Setup time - MCMTXPMDAT valid before MCMTXPMCLK high	0.25*C4-0.4		ns
5	toh(MCMTXPMCLKH-MCMTXPMDAT)	Hold time - MCMTXPMDAT valid after MCMTXPMCLK high	0.25*C4-0.4		ns
4	tosu(MCMTXPMDAT-MCMTXPMCLKL)	Setup time - MCMTXPMDAT valid before MCMTXPMCLK low	0.25*C4-0.4		ns
5	toh(MCMTXPMCLKL-MCMTXPMDAT)	Hold time - MCMTXPMDAT valid after MCMTXPMCLK low	0.25*C4-0.4		ns

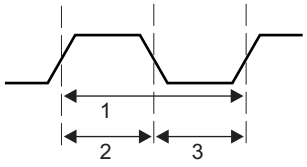

Figure 5-13. HyperLink Station Management Clock Timing

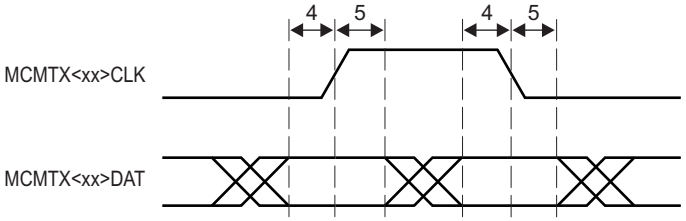

A. <xx> represents the interface that is being used: PM or FL

Figure 5-14. HyperLink Station Management Transmit Timing

Copyright © 2012–2016, Texas Instruments Incorporated

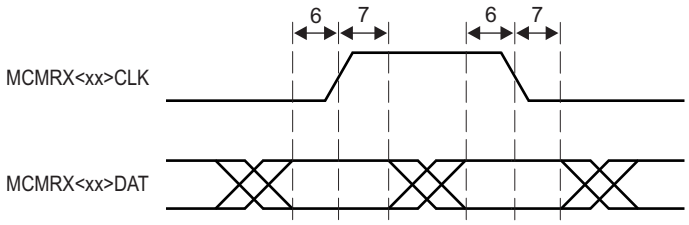

A. <xx> represents the interface that is being used: PM or FL

Figure 5-15. HyperLink Station Management Receive Timing

5.7.11 UART Peripheral

The universal asynchronous receiver/transmitter (UART) module provides an interface between the DSP and a UART terminal interface or other UART-based peripheral. The UART is based on the industry standard TL16C550 asynchronous communications element, which, in turn, is a functional upgrade of the TL16C450. Functionally similar to the TL16C450 on power up (single character or TL16C450 mode), the UART can be placed in an alternate FIFO (TL16C550) mode. This relieves the DSP of excessive software overhead by buffering received and transmitted characters. The receiver and transmitter FIFOs store up to 16 bytes including three additional bits of error status per byte for the receiver FIFO.

The UART performs serial-to-parallel conversions on data received from a peripheral device and parallel-to-serial conversion on data received from the DSP. The DSP can read the UART status at any time. The UART includes control capability and a processor interrupt system that can be tailored to minimize software management of the communications link. For more information on UART, see the Universal Asynchronous Receiver/Transmitter (UART) for KeyStone Devices User's Guide.

Table 5-15. UART Timing Requirements

(See Figure 5-16 and Figure 5-17.)

NO.			MIN	MAX	UNIT
Receive Timing					
4	tw(RXSTART)	Pulse width, receive Start bit	0.96U(1)	1.05U	ns
5	tw(RXH)	Pulse width, receive data/parity bit high	0.96U	1.05U	ns
5	tw(RXL)	Pulse width, receive data/parity bit low	0.96U	1.05U	ns
6	tw(RXSTOP1)	Pulse width, receive Stop bit 1	0.96U	1.05U	ns
6	tw(RXSTOP15)	Pulse width, receive Stop bit 1.5	1.5*(0.96U)	1.5*(1.05U)	ns
6	tw(RXSTOP2)	Pulse width, receive Stop bit 2	2*(0.96U)	2*(1.05U)	ns
Autoflow Timing Requirements					
8	td(CTSL-TX)	Delay time, CTS asserted to Start bit transmit	P(2)	5P	ns

(1) U = UART baud time = 1/programmed baud rate
(2) P = 1/SYSCLK7

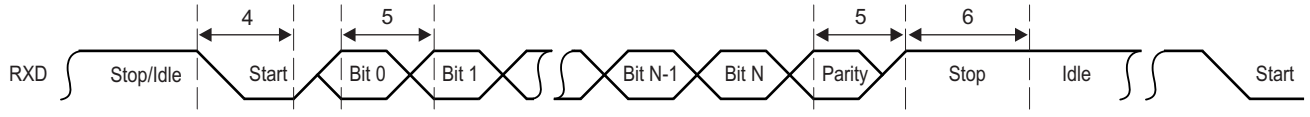

Figure 5-16. UART Receive Timing Waveform

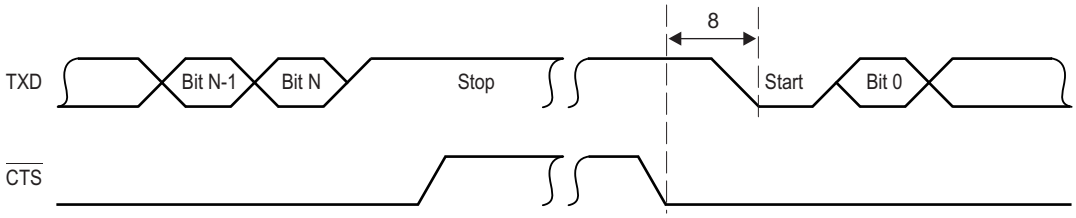

Figure 5-17. UART CTS (Clear-to-Send Input) — Autoflow Timing Waveform

Table 5-16. UART Switching Characteristics

(See Figure 5-18 and Figure 5-19.)

NO.	PARAMETER		MIN	MAX	UNIT
Transmit Timing					
1	tw(TXSTART)	Pulse width, transmit Start bit	U(1) - 2	U + 2	ns
2	tw(TXH)	Pulse width, transmit data/parity bit high	U - 2	U + 2	ns
2	tw(TXL)	Pulse width, transmit data/parity bit low	U - 2	U + 2	ns
3	tw(TXSTOP1)	Pulse width, transmit Stop bit 1	U - 2	U + 2	ns
3	tw(TXSTOP15)	Pulse width, transmit Stop bit 1.5	1.5 * (U - 2)	1.5 * ('U + 2)	ns
3	tw(TXSTOP2)	Pulse width, transmit Stop bit 2	2 * (U - 2)	2 * ('U + 2)	ns
Autoflow Timing Requirements					
7	td(RX-RTSH)	Delay time, Stop bit received to RTS deasserted	P(2)	5P	ns

(1) U = UART baud time = 1/programmed baud rate
(2) P = 1/SYSCLK7

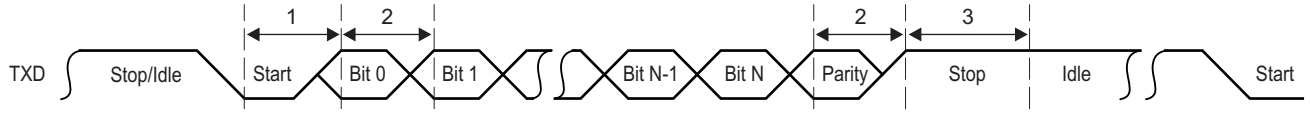

Figure 5-18. UART Transmit Timing Waveform

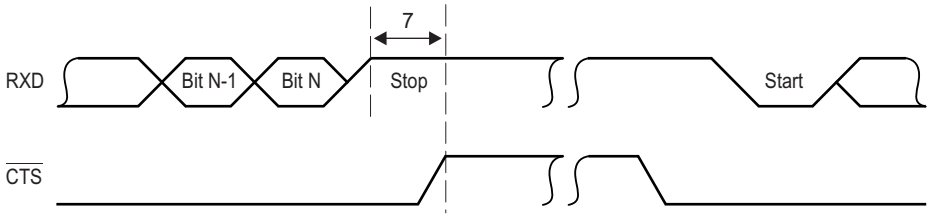

Figure 5-19. UART RTS (Request-to-Send Output) — Autoflow Timing Waveform

Copyright © 2012–2016, Texas Instruments Incorporated

5.7.12 EMIF16 Peripheral

The EMIF16 module provides an interface between DSP and external memories such as NAND and NOR flash. For more information, see the External Memory Interface (EMIF16) for KeyStone Devices User's Guide.

5.7.12.1 EMIF16 Electrical Data/Timing

Table 5-17. EMIF16 Asynchronous Memory Timing Requirements(1)(2)

(See Figure 5-20 and Figure 5-21.)

NO.			MIN	MAX	UNIT
General Timing					
2	t_w(WAIT)	Pulse duration, WAIT assertion and deassertion minimum time		2E	ns
28	t_d(WAIT-WEH)	Setup time, WAIT asserted before WE high		4E + 3	ns
14	t_d(WAIT-OEH)	Setup time, WAIT asserted before OE high		4E + 3	ns
Read Timing					
3	t_C(CEL)	EMIF read cycle time when ew = 0, meaning not in extended wait mode	(RS+RST+RH+3)*E-3	(RS+RST+RH+3)*E+3	ns
3	t_C(CEL)	EMIF read cycle time when ew =1, meaning extended wait mode enabled	(RS+RST+WAIT+RH+3)*E-3	(RS+RST+WAIT+RH+3)*E+3	ns
4	t_{osu}(CEL-OEL)	Output setup time from CE low to OE low. SS = 0, not in select strobe mode	(RS+1) * E - 3	(RS+1) * E + 3	ns
5	t_{oh}(OEH-CEH)	Output hold time from OE high to CE high. SS = 0, not in select strobe mode	(RH+1) * E - 3	(RH+1) * E + 3	ns
4	t_{osu}(CEL-OEL)	Output setup time from CE low to OE low in select strobe mode, SS = 1	(RS+1) * E - 3	(RS+1) * E + 3	ns
5	t_{oh}(OEH-CEH)	Output hold time from OE high to CE high in select strobe mode, SS = 1	(RH+1) * E - 3	(RH+1) * E + 3	ns
6	t_{osu}(BAV-OEL)	Output setup time from BA valid to OE low	(RS+1) * E - 3	(RS+1) * E + 3	ns
7	t_{oh}(OEH-BAIV)	Output hold time from OE high to BA invalid	(RH+1) * E - 3	(RH+1) * E + 3	ns
8	t_{osu}(AV-OEL)	Output setup time from A valid to OE low	(RS+1) * E - 3	(RS+1) * E + 3	ns
9	t_{oh}(OEH-AIV)	Output hold time from OE high to A invalid	(RH+1) * E - 3	(RH+1) * E + 3	ns
10	t_w(OEL)	OE active time low, when ew = 0. Extended wait mode is disabled.	(RST+1) * E - 3	(RST+1) * E + 3	ns
10	t_w(OEL)	OE active time low, when ew = 1. Extended wait mode is enabled.	(RST+1) * E - 3	(RST+1) * E + 3	ns
11	t_d(WAITH-OEH)	Delay time from WAIT deasserted to OE high		4E + 3	ns
12	t_{su}(D-OEH)	Input setup time from D valid to OE high	3		ns
13	t_h(OEH-D)	Input hold time from OE high to D invalid	0.5		ns
Write Timing					
15	t_c(CEL)	EMIF write cycle time when ew = 0, meaning not in extended wait mode	(WS+WST+WH+3)*E-3	(WS+WST+WH+3)*E+3	ns
15	t_c(CEL)	EMIF write cycle time when ew =1., meaning extended wait mode is enabled	(WS+WST+WAIT+WH+3)*E-3	(WS+WST+WAIT+WH+3)*E+3	ns
16	t_{osu}CEL-WEL)	Output setup time from CE low to WE low. SS = 0, not in select strobe mode	(WS+1) * E - 3		ns
17	t_{oh}(WEH-CEH)	Output hold time from WE high to CE high. SS = 0, not in select strobe mode	(WH+1) * E - 3		ns
16	t_{osu}CEL-WEL)	Output setup time from CE low to WE low in select strobe mode, SS = 1	(WS+1) * E - 3		ns
17	t_{oh}(WEH-CEH)	Output hold time from WE high to CE high in select strobe mode, SS = 1	(WH+1) * E - 3		ns
18	t_{osu}(RNW-WEL)	Output setup time from RNW valid to WE low	(WS+1) * E - 3		ns
19	t_{oh}(WEH-RNW)	Output hold time from WE high to RNW invalid	(WH+1) * E - 3		ns
20	t_{osu}(BAV-WEL)	Output setup time from BA valid to WE low	(WS+1) * E - 3		ns
21	t_{oh}(WEH-BAIV)	Output hold time from WE high to BA invalid	(WH+1) * E - 3		ns
22	t_{osu}(AV-WEL)	Output setup time from A valid to WE low	(WS+1) * E - 3		ns
23	t_{oh}(WEH-AIV)	Output hold time from WE high to A invalid	(WH+1) * E - 3		ns
24	t_w(WEL)	WE active time low, when ew = 0. Extended wait mode is disabled.	(WST+1) * E - 3		ns
24	t_w(WEL)	WE active time low, when ew = 1. Extended wait mode is enabled.	(WST+1) * E - 3		ns
26	t_{osu}(DV-WEL)	Output setup time from D valid to WE low	(WS+1) * E - 3		ns
27	t_{oh}(WEH-DIV)	Output hold time from WE high to D invalid	(WH+1) * E - 3		ns
25	t_d(WAITH-WEH)	Delay time from WAIT deasserted to WE high		4E + 3	ns

(1) E = 1/SYSCLK7, RS = Read Setup, RST = Read Strobe, RH = Read Hold, WS = Write Setup, WST = Write Strobe, WH = Write Hold.
(2) WAIT = number of cycles wait is asserted between the programmed end of the strobe period and wait deassertion.

Copyright © 2012–2016, Texas Instruments Incorporated

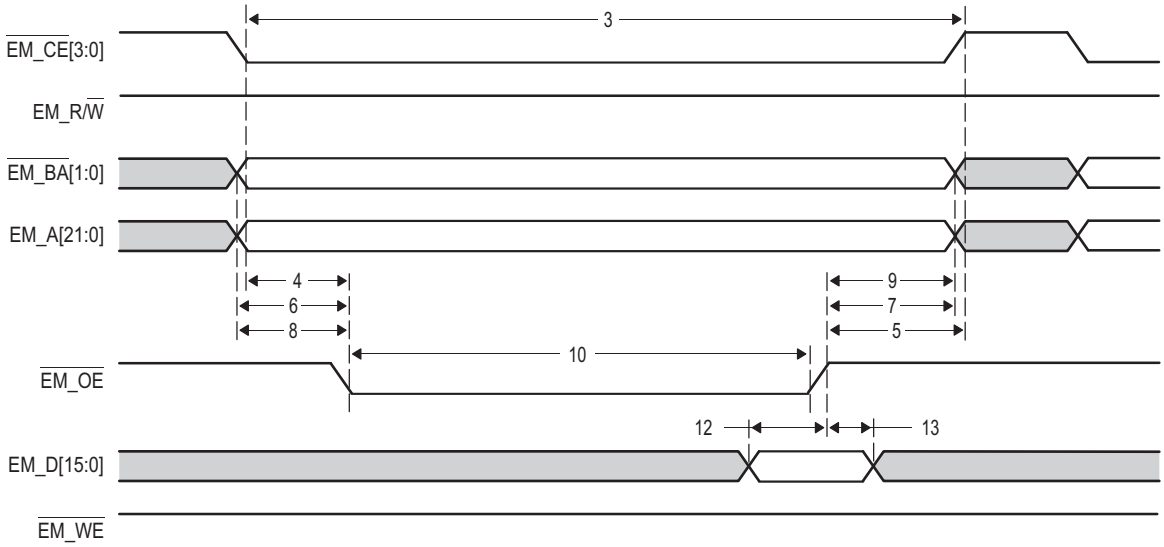

Figure 5-20. EMIF16 Asynchronous Memory Read Timing Diagram

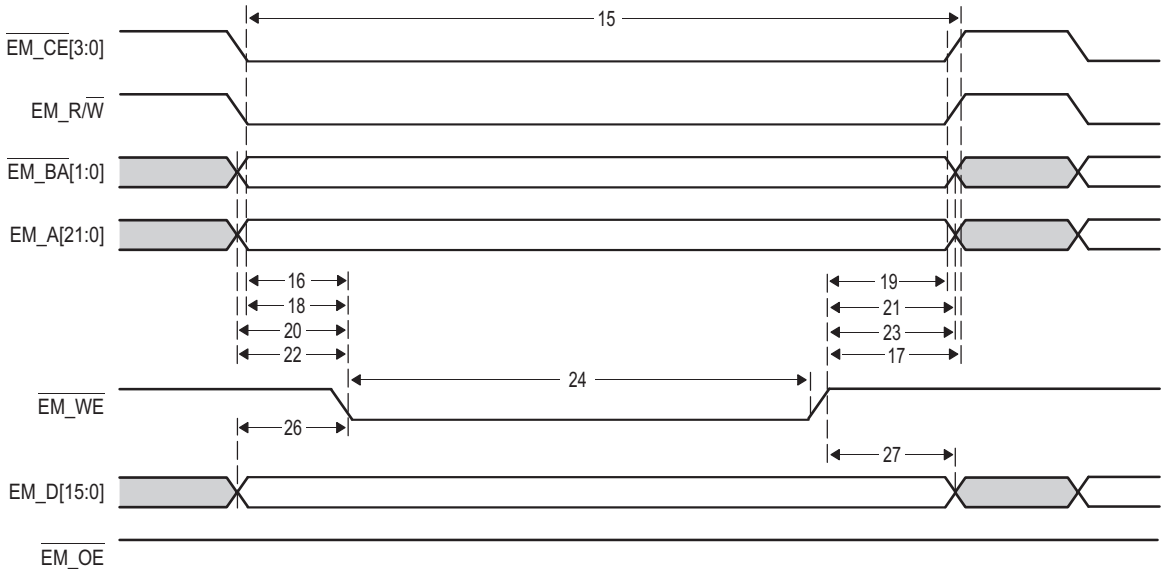

Figure 5-21. EMIF16 Asynchronous Memory Write Timing Diagram

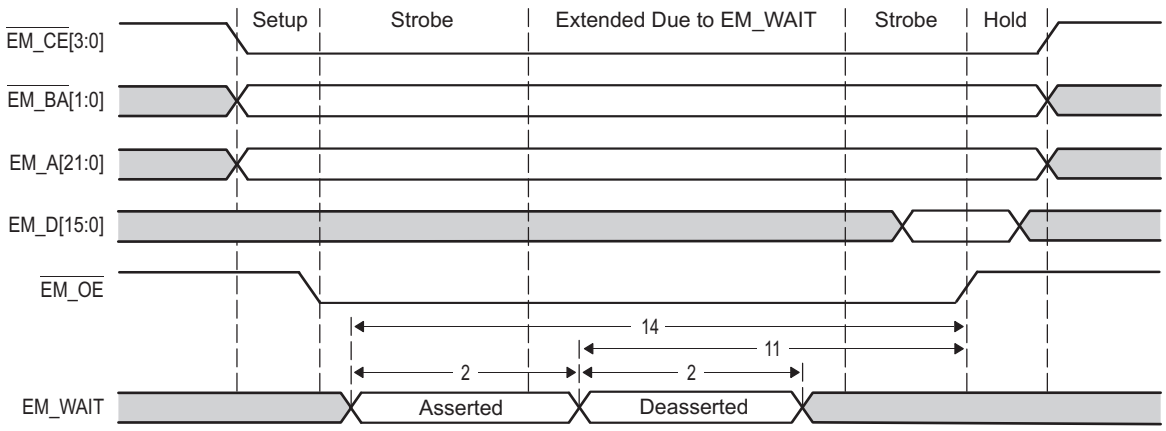

Figure 5-22. EMIF16 EM_WAIT Read Timing Diagram

Copyright © 2012–2016, Texas Instruments Incorporated

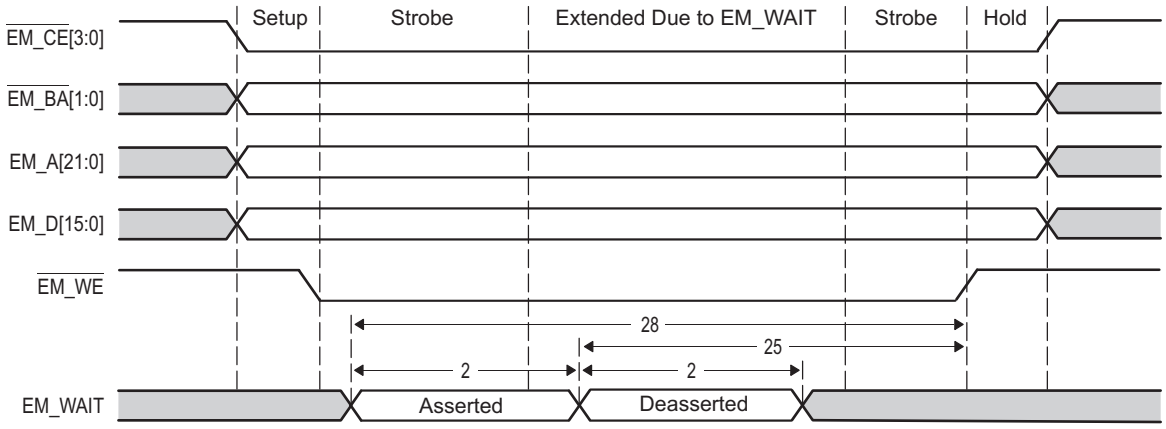

Figure 5-23. EMIF16 EM_WAIT Write Timing Diagram

5.7.13 MDIO Timing

Table 5-18. MDIO Timing Requirements

(See Figure 5-24.)

NO.			MIN	MAX	UNIT
1	tc(MDCLK)	Cycle time, MDCLK	400		ns
2	tw(MDCLKH)	Pulse duration, MDCLK high	180		ns
3	tw(MDCLKL)	Pulse duration, MDCLK low	180		ns
4	tsu(MDIO-MDCLKH)	Setup time, MDIO data input valid before MDCLK high	10		ns
5	th(MDCLKH-MDIO)	Hold time, MDIO data input valid after MDCLK high	0		ns
	tt(MDCLK)	Transition time, MDCLK		5	ns

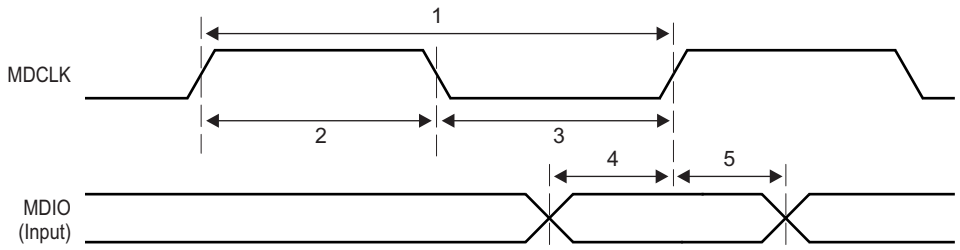

Figure 5-24. MDIO Input Timing

Table 5-19. MDIO Switching Characteristics

(See Figure 5-25.)

NO.		PARAMETER	MIN	MAX	UNIT
6	td(MDCLKL-MDIO)	Delay time, MDCLK low to MDIO data output valid		100	ns

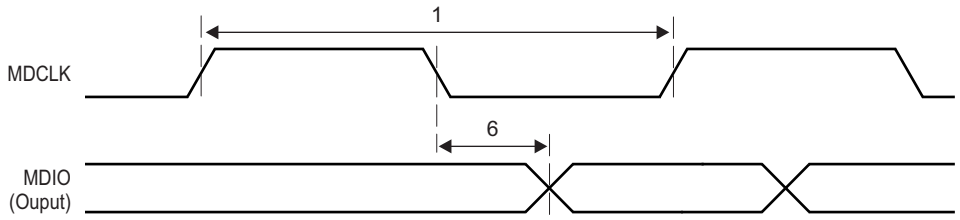

Figure 5-25. MDIO Output Timing

5.7.14 Timers Electrical Data/Timing

Table 5-20, Table 5-21, and Figure 5-26 describe the timing requirements and switching characteristics of Timer0 through Timer7 peripherals.

Table 5-20. Timer Input Timing Requirements(1)

(See Figure 5-26.)

NO.			MIN	MAX	UNIT
1	$t_{w(TINPH)}$	Pulse duration, high	12C		ns
2	$t_{w(TINPL)}$	Pulse duration, low	12C		ns

(1) C = 1 / CORECLK(N|P) frequency in ns.

Table 5-21. Timer Output Switching Characteristics(1)

(See Figure 5-26.)

NO.	PARAMETER		MIN	MAX	UNIT
3	$t_{w(TOUTH)}$	Pulse duration, high	12C - 3		ns
4	$t_{w(TOUTL)}$	Pulse duration, low	12C - 3		ns

(1) C = 1 / CORECLK(N|P) frequency in ns.

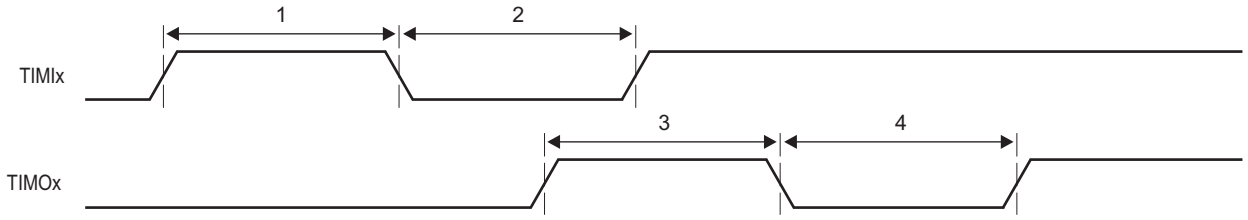

Figure 5-26. Timer Timing

Copyright © 2012–2016, Texas Instruments Incorporated

5.7.15 General-Purpose Input/Output (GPIO)

5.7.15.1 GPIO Device-Specific Information

On the C665x, the GPIO peripheral pins GP[15:0] are also used to latch configuration settings. For more detailed information on device/peripheral configuration and the C665x device pin muxing, see Section 8. For more information on GPIO, see the General Purpose Input/Output (GPIO) for KeyStone Devices User's Guide.

5.7.15.2 GPIO Electrical Data/Timing

Table 5-22. GPIO Input Timing Requirements

NO.			MIN	MAX	UNIT
1	$t_{w(GPOH)}$	Pulse duration, GPOx high	12C (1)		ns
2	$t_{w(GPOL)}$	Pulse duration, GPOx low	12C		ns

(1) C = 1/SYSCLK1 frequency in ns.

Table 5-23. GPIO Output Switching Characteristics

NO.	PARAMETER		MIN	MAX	UNIT
3	$t_{w(GPOH)}$	Pulse duration, GPOx high	36C (1) - 8		ns
4	$t_{w(GPOL)}$	Pulse duration, GPOx low	36C - 8		ns

(1) C = 1/SYSCLK1 frequency in ns.

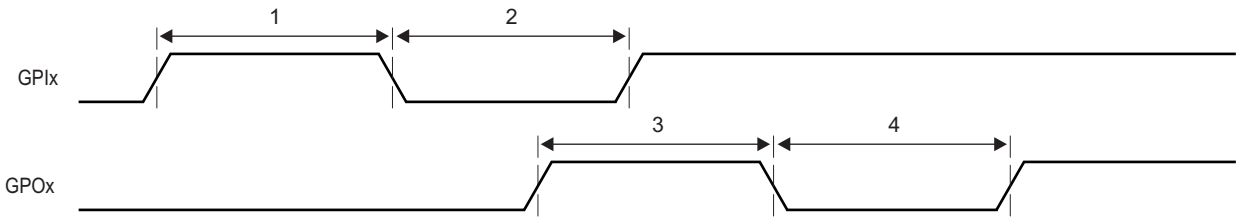

Figure 5-27. GPIO Timing

5.7.16 McBSP Electrical Data/Timing

The following tables assume testing over recommended operating conditions.

5.7.16.1 McBSP Timing

Table 5-24. McBSP Timing Requirements(1)

(See Figure 5-28.)

NO.				MIN	MAX	UNIT
2	$t_{c(CKRX)}$	Cycle time, CLKR/X	CLKR/X ext	2P or 20(2)(3)		ns
3	$t_{w(CKRX)}$	Pulse duration, CLKR/X high or CLKR/X low	CLKR/X ext	P-1(4)		ns
5	$t_{su(FRH-CKRL)}$	Setup time, external FSR high before CLKR low	CLKR int	14		ns
			CLKR ext	4		
6	$t_{h(CKRL-FRH)}$	Hold time, external FSR high after CLKR low	CLKR int	6		ns
			CLKR ext	3		
7	$t_{su(DRV-CKRL)}$	Setup time, DR valid before CLKR low	CLKR int	14		ns
			CLKR ext	4		
8	$t_{h(CKRL-DRV)}$	Hold time, DR valid after CLKR low	CLKR int	3		ns
			CLKR ext	3		
10	$t_{su(FXH-CKXL)}$	Setup time, external FSX high before CLKX low	CLKR int	14		ns
			CLKR ext	4		
11	$t_{h(CKXL-FXH)}$	Hold time, external FSX high after CLKX low	CLKR int	6		ns
			CLKR ext	3		

(1) CLKRP = CLKXP = FSRP = FSXP = 0. If polarity of any of the signals is inverted, then the timing references of that signal are also inverted.
(2) P = SYSCLK7 period in ns. For example, when the SYSCLK7 clock domain is running at 166MHz, use 6ns.
(3) Use whichever value is greater. Minimum CLKR/X cycle times must be met, even when CLKR/X is generated by an internal clock source. The minimum CLKR/X cycle times are based on internal logic speed; the maximum usable speed may be lower due to EDMA limitations and AC timing requirements
(4) This parameter applies to the maximum McBSP frequency. Operate serial clocks (CLKR/X) in the reasonable range of 40/60 duty cycle.

Copyright © 2012–2016, Texas Instruments Incorporated

Table 5-25. McBSP Switching Characteristics[1]

(See Figure 5-28.)

NO.	PARAMETER			MIN	MAX	UNIT
1	$t_{d(CKSH-CKRXH)}$	Delay time, CLKS high to CLKR/X high for internal CLKR/X generated from CLKS input.		1	14.5	ns
2	$t_{c(CKRX)}$	Cycle time, CLKR/X	CLKR/X int	2P or 20[2][3]		ns
3	$t_{w(CKRX)}$	Pulse duration, CLKR/X high or CLKR/X low	CLKR/X int	C – 2[4]	C + 2[4]	ns
4	$t_{d(CKRH-FRV)}$	Delay time, CLKR high to internal FSR valid	CLKR int	–4	5.5	ns
4			CLKR int	1	14.5	ns
9	$t_{d(CKXH-FXV)}$	Delay time, CLKX high to internal FSX valid	CLKX int	–4	5.5	ns
			CLKX ext	1	14.5	
12	$t_{dis(CKXH-DXHZ)}$	Disable time, DX Hi-Z following last data bit from CLKX high	CLKX int	–4	7.5	ns
			CLKX ext	1	14.5	
13	$t_{d(CKXH-DXV)}$	Delay time, CLKX high to DX valid	CLKX int	–4 + D1[5]	5.5 + D2[5]	ns
			CLKX ext	1 + D1[5]	14.5 + D2[5]	
14	$t_{d(FXH-DXV)}$	Delay time, FSX high to DX valid applies ONLY when in data delay 0 (XDATDLY = 00b) mode	FSX int	–4 + D1[6]	5 + D2[6]	ns
			FSX ext	–2 + D1[6]	14.5 + D2[6]	

(1) Minimum delay times also represent minimum output hold times.
(2) P = SYSCLK7 period in ns. For example, when the SYSCLK7 clock domain is running at 166 MHz, use 6 ns.
(3) Use whichever value is greater.
(4) C = H or L
S = sample rate generator input clock = P if CLKSM = 1 (P = SYSCLK7 period)
S = sample rate generator input clock = P_clks if CLKSM = 0 (P_clks = CLKS period)
If CLKGDV is even:
(1) H = CLKX high pulse width = (CLKGDV/2 + 1) * S
(2) L = CLKX low pulse width = (CLKGDV/2) * S
If CLKGDV is odd:
(1) H = (CLKGDV + 1)/2 * S
(2) L = (CLKGDV + 1)/2 * S
CLKGDV should be set appropriately to ensure the McBSP bit rate does not exceed the maximum limit.
(5) Extra delay from CLKX high to DX valid applies only to the first data bit of a device, if and only if DXENA = 1 in SPCR.
if DXENA = 0, then D1 = D2 = 0
if DXENA = 1, then D1 = 4P, D2 = 8P
(6) Extra delay from FSX high to DX valid applies only to the first data bit of a device, if and only if DXENA = 1 in SPCR.
if DXENA = 0, then D1 = D2 = 0
if DXENA = 1, then D1 = 4P, D2 = 8P

Copyright © 2012–2016, Texas Instruments Incorporated

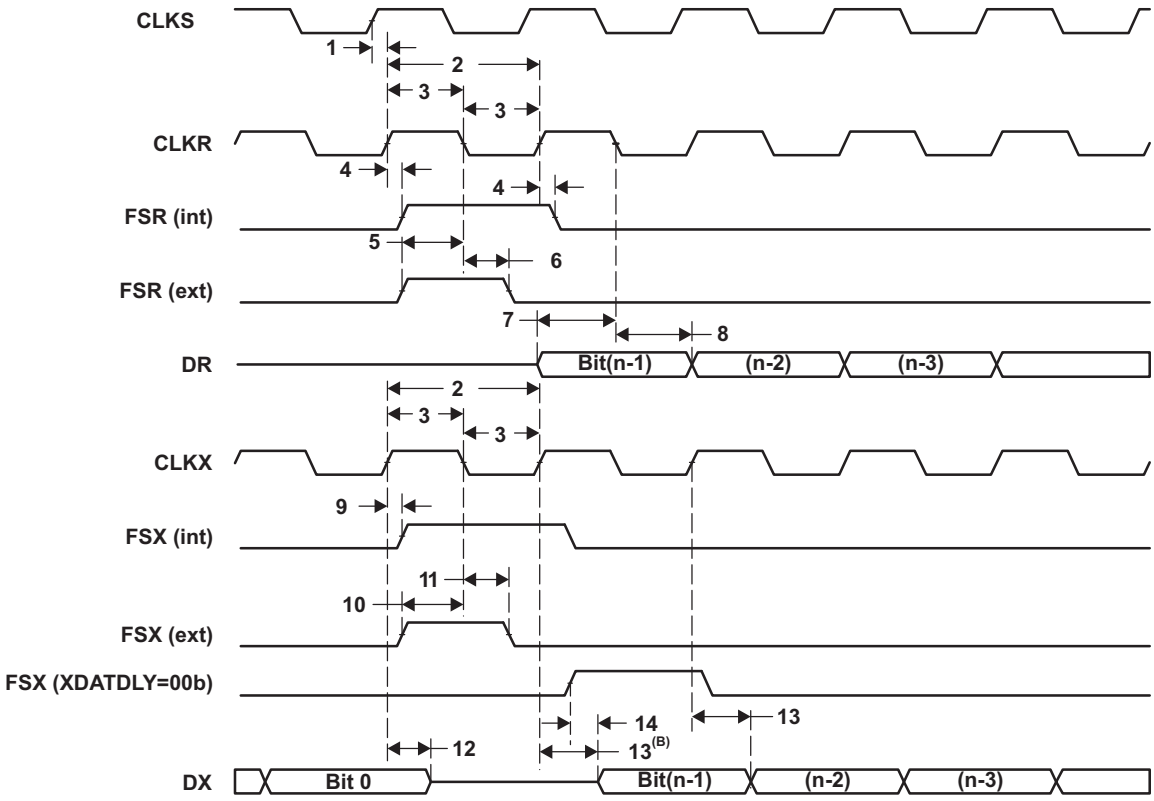

Figure 5-28. McBSP Timing

Table 5-26. McBSP Timing Requirements for FSR When GSYNC = 1

(See Figure 5-29.)

NO.			MIN	MAX	UNIT
1	$t_{su(FRH-CKSH)}$	Setup time, FSR high before CLKS high	4		ns
2	$t_{h(CKSH-FRH)}$	Hold time, FSR high after CLKS high	4		ns

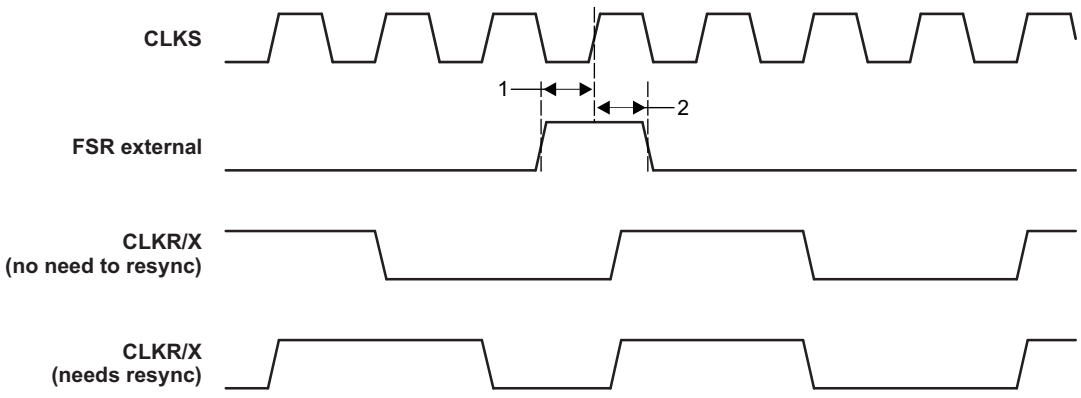

Figure 5-29. FSR Timing When GSYNC = 1

Copyright © 2012–2016, Texas Instruments Incorporated

5.7.17 uPP Timing and Switching

Table 5-27. uPP Timing Requirements

(See Figure 5-30, Figure 5-31, Figure 5-32, Figure 5-33.)

NO.				MIN	MAX	UNIT
1	$t_{c(INCLK)}$	Cycle time, CH*n*_CLK	SDR mode	13.33		ns
			DDR mode	26.66		
2	$t_{w(INCLKH)}$	Pulse width, CH*n*_CLK high	SDR mode	5		ns
			DDR mode	10		
3	$t_{w(INCLKL)}$	Pulse width, CH*n*_CLK low	SDR mode	5		ns
			DDR mode	10		
4	$t_{su(STV-INCLKH)}$	Setup time, CH*n*_START valid before CH*n*_CLK high		4		ns
5	$t_{h(INCLKH-STV)}$	Hold time, CH*n*_START valid after CH*n*_CLK high		0.8		ns
6	$t_{su(ENV-INCLKH)}$	Setup time, CH*n*_ENABLE valid before CH*n*_CLK high		4		ns
7	$t_{h(INCLKH-ENV)}$	Hold time, CH*n*_ENABLE valid after CH*n*_CLK high		0.8		ns
8	$t_{su(DV-INCLKH)}$	Setup time, CH*n*_DATA/XDATA valid before CH*n*_CLK high		4		ns
9	$t_{h(INCLKH-DV)}$	Hold time, CH*n*_DATA/XDATA valid after CH*n*_CLK high		0.8		ns
10	$t_{su(DV-INCLKL)}$	Setup time, CH*n*_DATA/XDATA valid before CH*n*_CLK low		4		ns
11	$t_{h(INCLKL-DV)}$	Hold time, CH*n*_DATA/XDATA valid after CH*n*_CLK low		0.8		ns
19	$t_{su(WTV-OUTCLKL)}$	Setup time, CH*n*_WAIT valid before CH*n*_CLK high		4		ns
20	$t_{h(INCLKL-WTV)}$	Hold time, CH*n*_WAIT valid after CH*n*_CLK high		0.8		ns
21	$t_{c(2xTXCLK)}$	Cycle time, 2xTXCLK input clock(1)		6.66		ns

(1) 2xTXCLK is an alternate transmit clock source that must be at least 2 times the required uPP transmit clock rate (as it is divided down by 2 inside the uPP). 2xTXCLK has no specified skew relationship to the CHn_CLOCK and therefore is not shown in the timing diagram.

Table 5-28. uPP Switching Characteristics

(See Figure 5-32 and Figure 5-33.)

NO.	PARAMETER			MIN	MAX	UNIT
12	$t_{c(OUTCLK)}$	Cycle time, CH*n*_CLK	SDR mode	13.33		ns
			DDR mode	26.66		
13	$t_{w(OUTCLKH)}$	Pulse width, CH*n*_CLK high	SDR mode	5		ns
			DDR mode	10		
14	$t_{w(OUTCLKL)}$	Pulse width, CH*n*_CLK low	SDR mode	5		ns
			DDR mode	10		
15	$t_{d(OUTCLKH-STV)}$	Delay time, CH*n*_START valid after CH*n*_CLK high		1	11	ns
16	$t_{d(OUTCLKH-ENV)}$	Delay time, CH*n*_ENABLE valid after CH*n*_CLK high		1	11	ns
17	$t_{d(OUTCLKH-DV)}$	Delay time, CH*n*_DATA/XDATA valid after CH*n*_CLK high		1	11	ns
18	$t_{d(OUTCLKL-DV)}$	Delay time, CH*n*_DATA/XDATA valid after CH*n*_CLK low		1	11	ns

Copyright © 2012–2016, Texas Instruments Incorporated

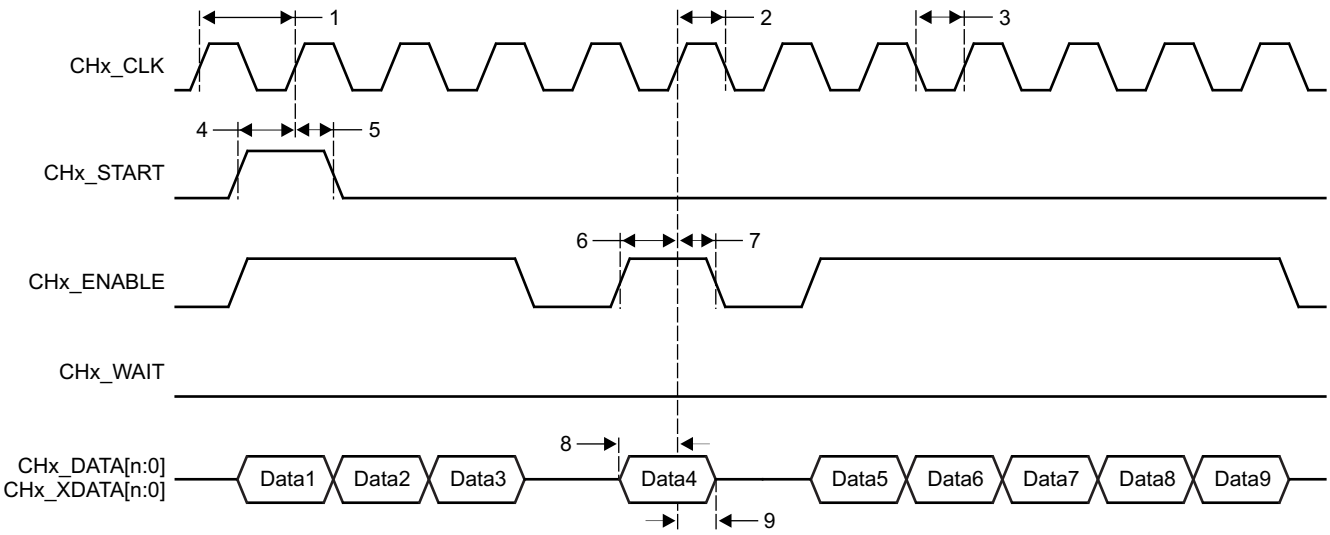

Figure 5-30. uPP Single Data Rate (SDR) Receive Timing

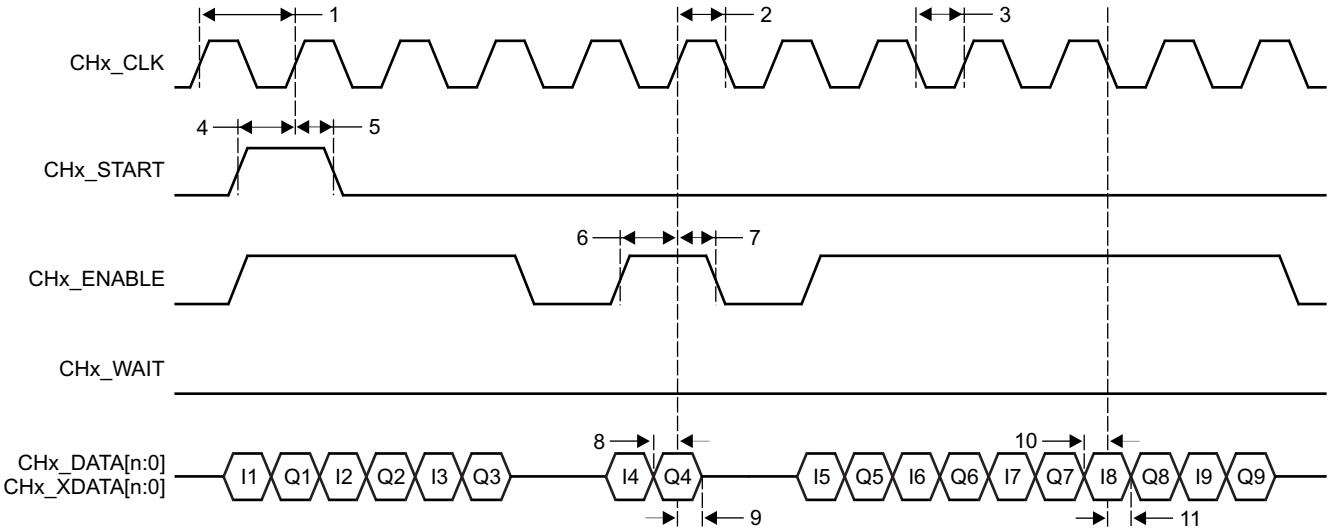

Figure 5-31. uPP Double Data Rate (DDR) Receive Timing

Copyright © 2012–2016, Texas Instruments Incorporated

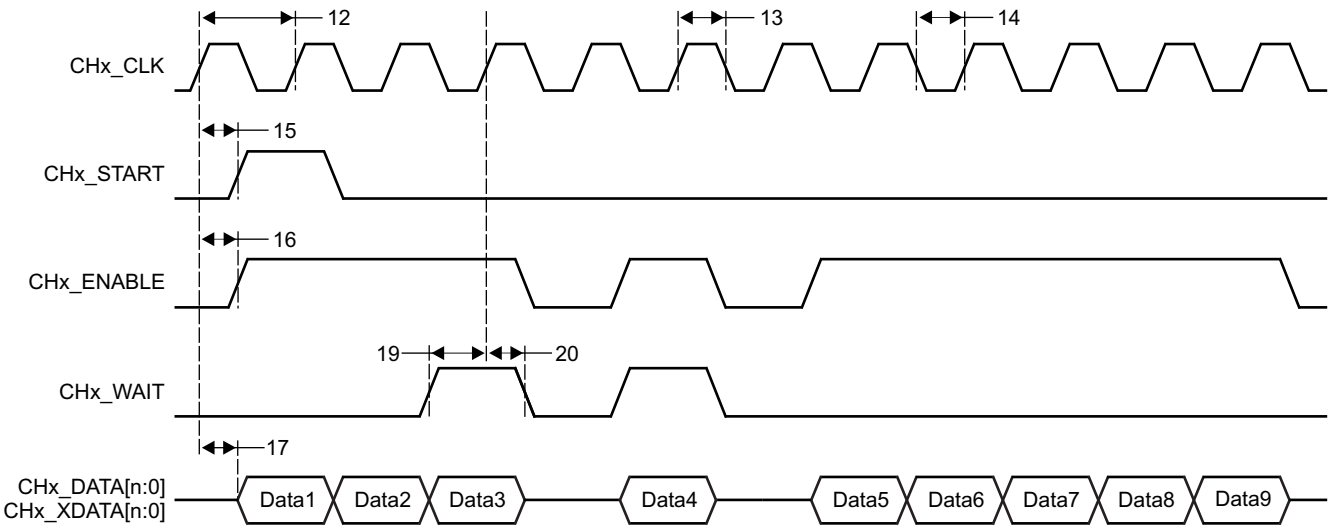

Figure 5-32. uPP Single Data Rate (SDR) Transmit Timing

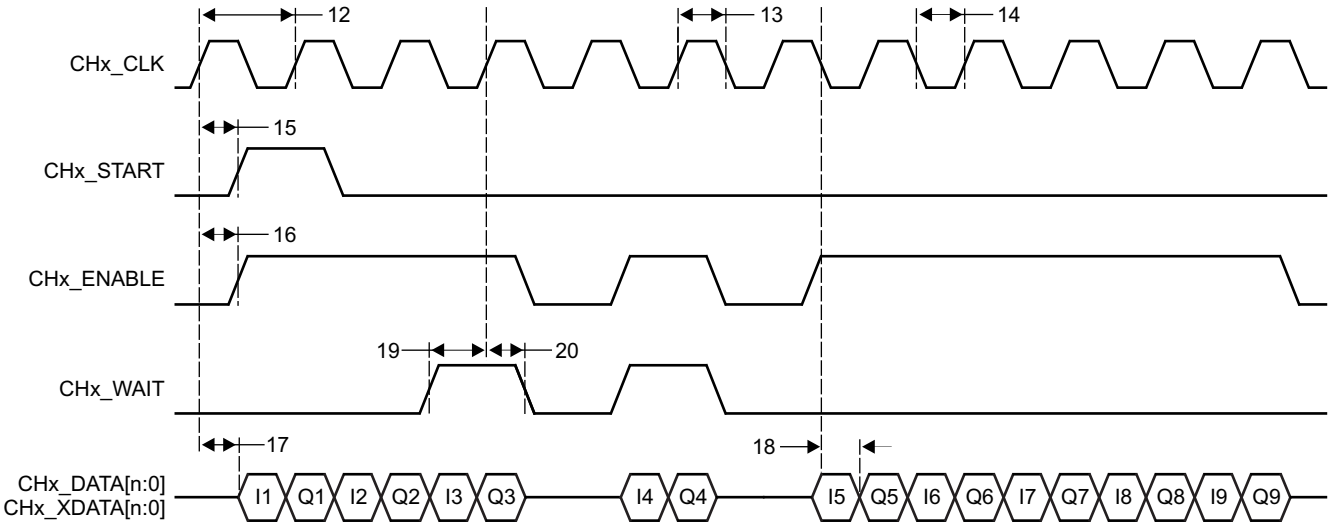

Figure 5-33. uPP Double Data Rate (DDR) Transmit Timing

5.7.18 Trace Electrical Data/Timing

Table 5-29. DSP Trace Switching Characteristics(1)

(See Figure 5-34.)

NO.	PARAMETER		MIN	MAX	UNIT
1	tw(DPnH)	Pulse duration, DPn/EMUn high detected at 50% Voh	2.4		ns
1	t_w(DPnH)90%	Pulse duration, DPn/EMUn high detected at 90% Voh	1.5		ns
2	t_w(DPnL)	Pulse duration, DPn/EMUnlow detected at 50% Voh	2.4		ns
2	t_w(DPnL)10%	Pulse duration, DPn/EMUnlow detected at 10% Voh	1.5		ns
3	t_{sko}(DPn)	Output skew time, time delay difference between DPn/EMUnpins configured as trace	–1	1	ns
	t_{skp}(DPn)	Pulse skew, magnitude of difference between high-to-low (tphl) and low-to-high (tplh) propagation delays.		600	ps
	$t_{\sigma\lambda\delta\pi_o}$(DPn)	Output slew rate DPn/EMUn	3.3		V/ns

(1) Over recommended operating conditions.

Table 5-30. STM Trace Switching Characteristics (1)

(See Figure 5-34.)

NO.	PARAMETER		MIN	MAX	UNIT
1	t_w(DPnH)	Pulse duration, DPn/EMUn high detected at 50% Voh with 60/40 duty cycle	4		ns
1	t_w(DPnH)90%	Pulse duration, DPn/EMUn high detected at 90% Voh	3.5		ns
2	t_w(DPnL)	Pulse duration, DPn/EMUn low detected at 50% Voh with 60/40 duty cycle	4		ns
2	t_w(DPnL)10%	Pulse duration, DPn/EMUn low detected at 10% Voh	3.5		ns
3	t_{sko}(DPn)	Output skew time, time delay difference between DPn/EMUn pins configured as trace	–1	1	ns
	t_{skp}(DPn)	Pulse skew, magnitude of difference between high-to-low (tphl) and low-to-high (tplh) propagation delays.		1	ns
	$t_{\sigma\lambda\delta\pi_o}$(DPn)	Output slew rate DPn/EMUn	3.3		V/ns

(1) Over recommended operating conditions.

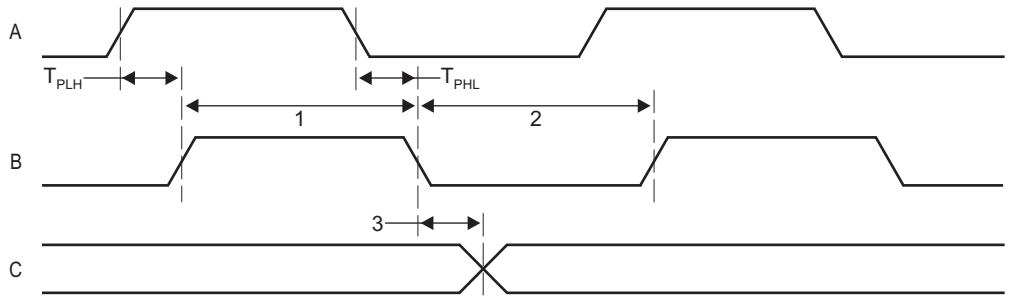

A. EMUx represents the EMU output pin configured as the trace clock output.
EMUy and EMUz represent all of the trace output data pins.

Figure 5-34. Trace Timing

Copyright © 2012–2016, Texas Instruments Incorporated

5.7.19 JTAG Electrical Data/Timing

Table 5-31. JTAG Test Port Timing Requirements

(See Figure 5-35.)

NO.			MIN	MAX	UNIT
1	$t_{c(TCK)}$	Cycle time, TCK	34		ns
1a	tw(TCKH)	Pulse duration, TCK high (40% of tc)	13.6		ns
1b	tw(TCKL)	Pulse duration, TCK low(40% of tc)	13.6		ns
3	tsu(TDI-TCK)	input setup time, TDI valid to TCK high	3.4		ns
3	tsu(TMS-TCK)	input setup time, TMS valid to TCK high	3.4		ns
4	th(TCK-TDI)	input hold time, TDI valid from TCK high	17		ns
4	th(TCK-TMS)	input hold time, TMS valid from TCK high	17		ns

Table 5-32. JTAG Test Port Switching Characteristics(1)

(See Figure 5-35.)

NO.	PARAMETER		MIN	MAX	UNIT
2	$t_{d(TCKL-TDOV)}$	Delay time, TCK low to TDO valid		13.6	ns

(1) Over recommended operating conditions.

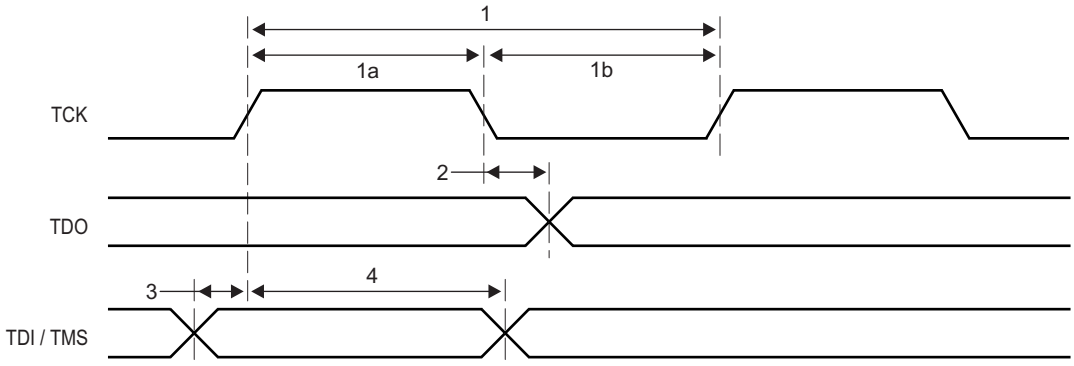

Figure 5-35. JTAG Test-Port Timing

6 Detailed Description

6.1 Recommended Clock and Control Signal Transition Behavior

All clocks and control signals must transition between V_{IH} and V_{IL} (or between V_{IL} and V_{IH}) in a monotonic manner.

6.2 Power Supplies

The following sections describe the proper power-supply sequencing and timing needed to properly power on the C665x. The various power supply rails and their primary function is listed in Table 6-1.

Table 6-1. Power Supply Rails on C665x

NAME	PRIMARY FUNCTION	VOLTAGE	NOTES
CVDD	SmartReflex core supply voltage	0.85 V - 1.1 V	Includes core voltage for DDR3 module
CVDD1	Core supply voltage for memory array	1.0 V	Fixed supply at 1.0 V
VDDT1	HyperLink SerDes termination supply	1.0 V	Filtered version of CVDD1. Special considerations for noise. Filter is not needed if HyperLink is not in use.
VDDT2	SGMII/SRIO/PCIE SerDes termination supply	1.0 V	Filtered version of CVDD1. Special considerations for noise. Filter is not needed if SGMII/SRIO/PCIE is not in use.
DVDD15	1.5-V DDR3 IO supply	1.5 V	
VDDR1	HyperLink SerDes regulator supply	1.5 V	Filtered version of DVDD15. Special considerations for noise. Filter is not needed if HyperLink is not in use.
VDDR2	PCIE SerDes regulator supply	1.5 V	Filtered version of DVDD15. Special considerations for noise. Filter is not needed if PCIE is not in use.
VDDR3	SGMII SerDes regulator supply	1.5 V	Filtered version of DVDD15. Special considerations for noise. Filter is not needed if SGMII is not in use.
VDDR4	SRIO SerDes regulator supply	1.5 V	Filtered version of DVDD15. Special considerations for noise. Filter is not needed if HyperLink is not in use.
DVDD18	1.8-V IO supply	1.8 V	
AVDDA1	Main PLL supply	1.8 V	Filtered version of DVDD18. Special considerations for noise.
AVDDA2	DDR3 PLL supply	1.8 V	Filtered version of DVDD18. Special considerations for noise.
VREFSSTL	0.75-V DDR3 reference voltage	0.75 V	Should track the 1.5-V supply. Use 1.5 V as source.
VSS	Ground	GND	

Copyright © 2012–2016, Texas Instruments Incorporated

6.3 Power Supply to Peripheral I/O Mapping(1)(2)

Over Recommended Ranges of Supply Voltage and Operating Case Temperature (Unless Otherwise Noted)

POWER SUPPLY		I/O BUFFER TYPE	ASSOCIATED PERIPHERAL
CVDD	Supply Core Voltage	LJCB	CORECLK(P|N) PLL input buffers
			SRIOSGMIICLK(P|N) SerDes PLL input buffers
			DDRCLK(P|N) PLL input buffers
			PCIECLK(P|N) SERDES PLL input buffers
CVDD	Supply Core Voltage	LJCB	MCMCLK(P|N) SERDES PLL input buffer s
DVDD15	1.5-V supply I/O voltage	DDR3 (1.5 V)	All DDR3 memory controller peripheral I/O buffers
DVDD18	1.8-V supply I/O voltage	LVCMOS (1.8 V)	All GPIO peripheral I/O buffers
			All JTAG and EMU peripheral I/O buffers
			All Timer peripheral I/O buffers
			All SPI peripheral I/O buffers
			All RESETs, NMI, Control peripheral I/O buffers
			All MDIO peripheral I/O buffers
			All UART peripheral I/O buffers
			All McBSP peripheral I/O buffers
			All EMIF16 peripheral I/O buffers
			All uPP peripheral I/O buffers
		Open-drain (1.8V)	All I^2C peripheral I/O buffers
			All SmartReflex peripheral I/O buffers
DVDD18	1.8-V supply I/O voltage	LVCMOS (1.8 V)	All Hyperlink sideband peripheral I/O buffers
VDDT1	Hyperlink SerDes termination and analogue front-end supply	SerDes/CML	Hyperlink SerDes CML I/O buffers
VDDT2	SRIO/SGMII/PCIE SerDes termination and analogue front-end supply	SerDes/CML	SRIO/SGMII/PCIE SerDes CML I/O buffers

(1) This table does not try to describe all functions of all power supply terminals but only those whose purpose it is to power peripheral I/O buffers and clock input buffers.
(2) See Hardware Design Guide for KeyStone Devices for more information about individual peripheral I/O.

6.3.1 Power-Supply Sequencing

This section defines the requirements for a power up sequencing from a power-on reset condition. There are two acceptable power sequences for the device. The first sequence stipulates the core voltages starting before the I/O voltages as follows:

1. CVDD
2. CVDD1, VDDT1-2
3. DVDD18, AVDDA1, AVDDA2
4. DVDD15, VDDR1-4

The second sequence provides compatibility with other TI processors with the I/O voltage starting before the core voltages as follows:

1. DVDD18, AVDDA1, AVDDA2
2. CVDD
3. CVDD1, VDDT1-2
4. DVDD15, VDDR1-4

The clock input buffers for CORECLK, DDRCLK, SRIOSGMIICLK, MCMCLK, and PCIECLK use only CVDD as a supply voltage. These clock inputs are not fail-safe and must be held in a high-impedance state until CVDD is at a valid voltage level. Driving these clock inputs high before CVDD is valid could cause damage to the device. Once CVDD is valid it is acceptable that the P and N legs of these CLKs may be held in a static state (either high and low or low and high) until a valid clock frequency is needed at that input. To avoid internal oscillation the clock inputs should be removed from the high impedance state shortly after CVDD is present.

If a clock input is not used it must be held in a static state. To accomplish this the N leg should be pulled to ground through a 1 kΩ resistor. The P leg should be tied to CVDD to ensure it will not have any voltage present until CVDD is active. Connections to the I/O cells powered by DVDD18 and DVDD15 are not fail-safe and should not be driven high before these voltages are active. Driving these I/O cells high before DVDD18 or DVDD15 are valid could cause damage to the device.

The device initialization is broken into two phases. The first phase consists of the time period from the activation of the first power supply until the point in which all supplies are active and at a valid voltage level. Either of the sequencing scenarios described above can be implemented during this phase. Figure 6-1 and Figure 6-2 show both the core-before-I/O voltage sequence and the I/O-before-core voltage sequence. $\overline{\text{POR}}$ must be held low for the entire power stabilization phase.

This is followed by the device initialization phase. The rising edge of $\overline{\text{POR}}$ followed by the rising edge of $\overline{\text{RESETFULL}}$ will trigger the end of the initialization phase but both must be inactive for the initialization to complete. $\overline{\text{POR}}$ must always go inactive before $\overline{\text{RESETFULL}}$ goes inactive as described in the following sections. SYSCLK1 in the following section refers to the clock input that has been selected as the source for the main PLL and SYSCLK1 refers to the main PLL output that is used by the CorePac, see Figure 6-3 for more details.

Copyright © 2012–2016, Texas Instruments Incorporated

6.3.1.1 Core-Before-IO Power Sequencing

Figure 6-1 shows the power sequencing and reset control of C665x for device initialization. POR may be removed after the power has been stable for the required 100 µs. RESETFULL must be held low for a period after the rising edge of POR but may be held low for longer periods if necessary. The configuration bits shared with the GPIO pins will be latched on the rising edge of RESETFULL and must meet the setup and hold times specified. SYSCLK1 must always be active before POR can be removed. Core-before-IO power sequencing is defined in Table 6-2.

NOTE

TI recommends a maximum of 100 ms between one power rail being valid, and the next power rail in the sequence starting to ramp.

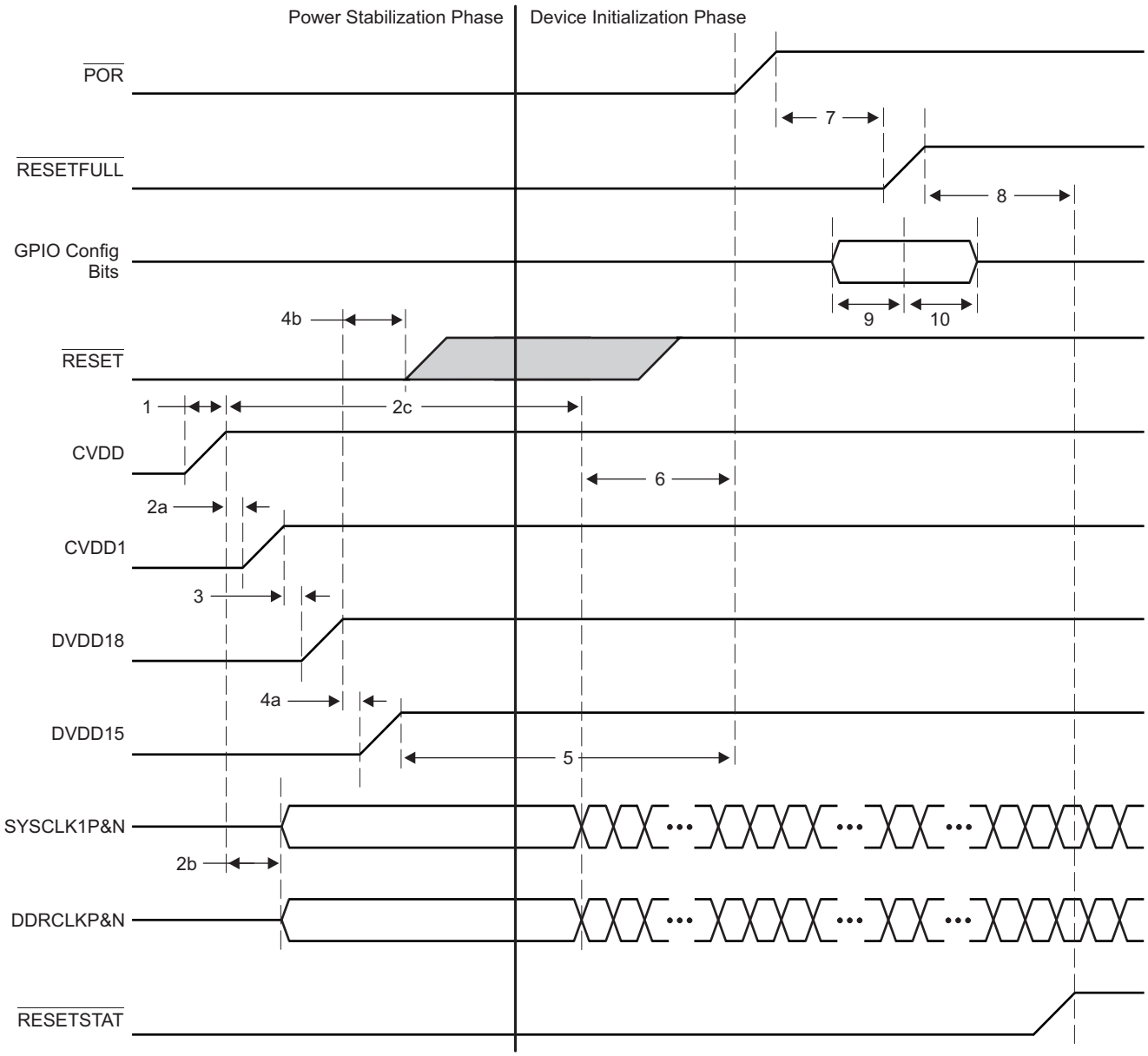

Figure 6-1. Core-Before-IO Power Sequencing

Table 6-2. Core-Before-IO Power Sequencing

TIME	SYSTEM STATE
1	**Begin Power Stabilization Phase** • CVDD (core AVS) ramps up. • $\overline{\text{POR}}$ must be held low through the power stabilization phase. Because $\overline{\text{POR}}$ is low, all the core logic that has async reset (created from $\overline{\text{POR}}$) is put into the reset state.
2a	• CVDD1 (core constant) ramps at the same time or shortly following CVDD. Although ramping CVDD1 and CVDD simultaneously is permitted, the voltage for CVDD1 must never exceed CVDD until after CVDD has reached a valid voltage. • The purpose of ramping up the core supplies close to each other is to reduce crowbar current. CVDD1 should trail CVDD as this will ensure that the WLs in the memories are turned off and there is no current through the memory bit cells. If, however, CVDD1 (core constant) ramps up before CVDD (core AVS), then the worst-case current could be on the order of twice the specified draw of CVDD1.
2b	• Once CVDD is valid, the clock drivers should be enabled. Although the clock inputs are not necessary at this time, they should either be driven with a valid clock or be held in a static state with one leg high and one leg low.
2c	• The DDRCLK and SYSCLK1 may begin to toggle anytime between when CVDD is at a valid level and the setup time before $\overline{\text{POR}}$ goes high specified by t6.
3	• Filtered versions of 1.8 V can ramp simultaneously with DVDD18. • RESETSTAT is driven low once the DVDD18 supply is available. • All LVCMOS input and bidirectional pins must not be driven or pulled high until DVDD18 is present. Driving an input or bidirectional pin before DVDD18 is valid could cause damage to the device.
4a	• DVDD15 (1.5 V) supply is ramped up following DVDD18. Although ramping DVDD18 and DVDD15 simultaneously is permitted, the voltage for DVDD15 ***must never exceed*** DVDD18.
4b	• $\overline{\text{RESET}}$ may be driven high any time after DVDD18 is at a valid level. In a $\overline{\text{POR}}$-controlled boot, $\overline{\text{RESET}}$ must be high before $\overline{\text{POR}}$ is driven high.
5	• $\overline{\text{POR}}$ must continue to remain low for at least 100 µs after power has stabilized. End Power Stabilization Phase
6	• Device initialization requires 500 SYSCLK1 periods after the Power Stabilization Phase. The maximum clock period is 33.33 nsec, so a delay of an additional 16 µs is required before a rising edge of $\overline{\text{POR}}$. The clock must be active during the entire 16 µs.
7	• $\overline{\text{RESETFULL}}$ must be held low for at least 24 transitions of the SYSCLK1 after $\overline{\text{POR}}$ has stabilized at a high level.
8	• The rising edge of the $\overline{\text{RESETFULL}}$ will remove the reset to the efuse farm allowing the scan to begin. • Once device initialization and the efuse farm scan are complete, the $\overline{\text{RESETSTAT}}$ signal is driven high. This delay will be 10000 to 50000 clock cycles. End Device Initialization Phase
9	• GPIO configuration bits must be valid for at least 12 transitions of the SYSCLK1 before the rising edge of $\overline{\text{RESETFULL}}$
10	• GPIO configuration bits must be held valid for at least 12 transitions of the SYSCLK1 after the rising edge of $\overline{\text{RESETFULL}}$

Copyright © 2012–2016, Texas Instruments Incorporated

6.3.1.2 IO-Before-Core Power Sequencing

The timing diagram for IO-before-core power sequencing is shown in Figure 6-2 and defined in Table 6-3.

NOTE

TI recommends a maximum of 100 ms between one power rail being valid, and the next power rail in the sequence starting to ramp.

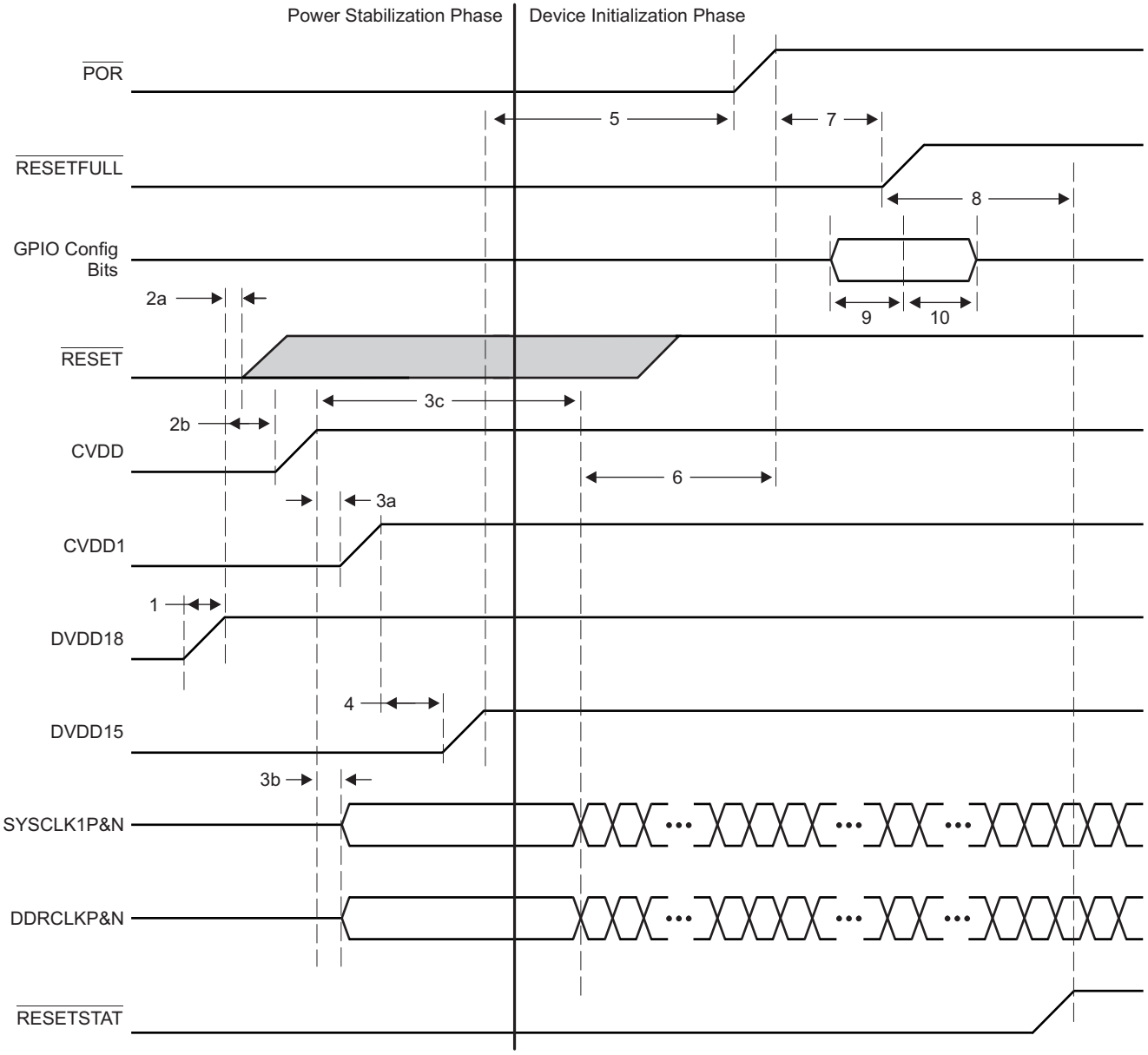

Figure 6-2. IO-Before-Core Power Sequencing

Table 6-3. IO-Before-Core Power Sequencing

TIME	SYSTEM STATE
1	**Begin Power Stabilization Phase** • Because $\overline{\text{POR}}$ is low, all the core logic having async reset (created from POR) are put into reset state once the core supply ramps. $\overline{\text{POR}}$ must remain low through Power Stabilization Phase. • Filtered versions of 1.8 V can ramp simultaneously with DVDD18. • $\overline{\text{RESETSTAT}}$ is driven low once the DVDD18 supply is available. • All input and bidirectional pins must not be driven or pulled high until DVDD18 is present. Driving an input or bidirectional pin before DVDD18 could cause damage to the device.
2a	• $\overline{\text{RESET}}$ may be driven high anytime after DVDD18 is at a valid level.
2b	• CVDD (core AVS) ramps up.
3a	• CVDD1 (core constant) ramps at the same time or following CVDD. Although ramping CVDD1 and CVDD simultaneously is permitted the voltage for CVDD1 ***must never exceed*** CVDD until after CVDD has reached a valid voltage. • The purpose of ramping up the core supplies close to each other is to reduce crowbar current. CVDD1 should trail CVDD as this will ensure that the WLs in the memories are turned off and there is no current through the memory bit cells. If, however, CVDD1 (core constant) ramps up before CVDD (core AVS), then the worst case current could be on the order of twice the specified draw of CVDD1.
3b	• Once CVDD is valid, the clock drivers should be enabled. Although the clock inputs are not necessary at this time, they should either be driven with a valid clock or held in a static state with one leg high and one leg low.
3c	• The DDRCLK and SYSCLK1 may begin to toggle anytime between when CVDD is at a valid level and the setup time before $\overline{\text{POR}}$ goes high specified by t6.
4	• DVDD15 (1.5 V) supply is ramped up following CVDD1.
5	• $\overline{\text{POR}}$ must continue to remain low for at least 100 µs after power has stabilized. End Power Stabilization Phase
6	Begin Device Initialization • Device initialization requires 500 SYSCLK1 periods after the Power Stabilization Phase. The maximum clock period is 33.33 nsec so a delay of an additional 16 µs is required before a rising edge of $\overline{\text{POR}}$. The clock must be active during the entire 16 µs. • $\overline{\text{POR}}$ must remain low.
7	• $\overline{\text{RESETFULL}}$ is held low for at least 24 transitions of the SYSCLK1 after $\overline{\text{POR}}$ has stabilized at a high level. • The rising edge of the $\overline{\text{RESETFULL}}$ will remove the reset to the efuse farm allowing the scan to begin.
8	• Once device initialization and the efuse farm scan are complete, the $\overline{\text{RESETSTAT}}$ signal is driven high. This delay will be 10000 to 50000 clock cycles. End Device Initialization Phase
9	• GPIO configuration bits must be valid for at least 12 transitions of the SYSCLK1 before the rising edge of $\overline{\text{RESETFULL}}$
10	• GPIO configuration bits must be held valid for at least 12 transitions of the SYSCLK1 after the rising edge of $\overline{\text{RESETFULL}}$

6.3.1.3 Prolonged Resets

Holding the device in $\overline{\text{POR}}$, $\overline{\text{RESETFULL}}$, or $\overline{\text{RESET}}$ for long periods of time will affect the long term reliability of the part. The device should not be held in a reset for times exceeding 1 hour and should not be held in reset for more the 5% of the time during which power is applied. Exceeding these limits will cause a gradual reduction in the reliability of the part. This can be avoided by allowing the DSP to boot and then configuring it to enter a hibernation state soon after power is applied. This will satisfy the reset requirement while limiting the power consumption of the device.

Copyright © 2012–2016, Texas Instruments Incorporated

6.3.1.4 Clocking During Power Sequencing

Some of the clock inputs are required to be present for the device to initialize correctly, but behavior of many of the clocks is contingent on the state of the boot configuration pins. Table 6-4 describes the clock sequencing and the conditions that affect the clock operation. All clock drivers should be in a high-impedance state until CVDD is at a valid level and that all clock inputs either be active or in a static state with one leg pulled low and the other connected to CVDD.

Table 6-4. Clock Sequencing

CLOCK	CONDITION	SEQUENCING
DDRCLK	None	Must be present 16 µs before $\overline{\text{POR}}$ transitions high.
CORECLK	None	CORECLK used to clock the core PLL. It must be present 16 µs before $\overline{\text{POR}}$ transitions high.
SRIOSGMII CLK	SGMII will not be used. SRIO will be used as a boot device.	SRIOSGMIICLK must be present 16 µs before $\overline{\text{POR}}$ transitions high.
	SGMII will not be used. SRIO will be used after boot.	SRIOSGMIICLK is used as a source to the SRIO SERDES PLL. It must be present before the SRIO is removed from reset and programmed.
PCIECLK	PCIE will be used as a boot device.	PCIECLK must be present 16 µs before $\overline{\text{POR}}$ transitions high.
	PCIE will be used after boot.	PCIECLK is used as a source to the PCIE SERDES PLL. It must be present before the PCIE is removed from reset and programmed.
	PCIE will not be used.	PCIECLK is not used and should be tied to a static state.
MCMCLK	HyperLink will be used as a boot device.	MCMCLK must be present 16 µs before $\overline{\text{POR}}$ transitions high.
	HyperLink will be used after boot.	MCMCLK is used as a source to the MCM SERDES PLL. It must be present before the HyperLink is removed from reset and programmed.
	HyperLink will not be used.	MCMCLK is not used and should be tied to a static state.

6.3.2 Power-Down Sequence

The power down sequence is the exact reverse of the power-up sequence described above. The goal is to prevent a large amount of static current and to prevent overstress of the device. A power-good circuit that monitors all the supplies for the device should be used in all designs. If a catastrophic power supply failure occurs on any voltage rail, $\overline{\text{POR}}$ should transition to low to prevent overcurrent conditions that could possibly impact device reliability.

A system power monitoring solution is needed to shut down power to the board if a power supply fails. Long-term exposure to an environment in which one of the power supply voltages is no longer present will affect the reliability of the device. Holding the device in reset is not an acceptable solution because prolonged periods of time with an active reset can also affect long term reliability.

6.3.3 Power Supply Decoupling and Bulk Capacitors

To properly decouple the supply planes on the PCB from system noise, decoupling and bulk capacitors are required. Bulk capacitors are used to minimize the effects of low-frequency current transients and decoupling or bypass capacitors are used to minimize higher frequency noise. For recommendations on selection of Power Supply Decoupling and Bulk capacitors see the Hardware Design Guide for KeyStone Devices.

Copyright © 2012–2016, Texas Instruments Incorporated

6.4 Power Sleep Controller (PSC)

The Power Sleep Controller (PSC) controls overall device power by turning off unused power domains and gating off clocks to individual peripherals and modules. The PSC provides the user with an interface to control several important power and clock operations.

For information on the Power Sleep Controller, see the Power Sleep Controller (PSC) for KeyStone Devices User's Guide.

6.4.1 Power Domains

The device has several power domains that can be turned on for operation or off to minimize power dissipation. The global power/sleep controller (GPSC) is used to control the power gating of various power domains.

Table 6-5 shows the C665x power domains.

Table 6-5. Power Domains

DOMAIN	BLOCK(S)	NOTE	POWER CONNECTION
0	Most peripheral logic	Cannot be disabled	Always on
1	Per-core TETB and System TETB	RAMs can be powered down	Software control
2	Reserved	Reserved	Reserved
3	PCIe	Logic can be powered down	Software control
4	SRIO	Logic can be powered down	Software control
5	HyperLink	Logic can be powered down	Software control
6	Reserved	Reserved	Reserved
7	MSMC RAM	MSMC RAM can be powered down	Software control
8	Reserved	Reserved	Reserved
9	Reserved	Reserved	Reserved
10	Reserved	Reserved	Reserved
11	TCP3d	RAMs can be powered down	Software control
12	VCP2_B	RAMs can be powered down	Software control
13	C66x Core 0, L1/L2 RAMs	L2 RAMs can sleep	Software control through C66x CorePac. For details, see the C66x CorePac Reference Guide.
14	C66x Core 1, L1/L2 RAMs (C6657 only)	L2 RAMs can sleep	Software control through C66x CorePac. For details, see the C66x CorePac Reference Guide.
15	Reserved	Reserved	Reserved

Copyright © 2012–2016, Texas Instruments Incorporated

6.4.2 Clock Domains

Clock gating to each logic block is managed by the local power/sleep controllers (LPSCs) of each module. For modules with a dedicated clock or multiple clocks, the LPSC communicates with the PLL controller to enable and disable the clock (or clocks) of that module at the source. For modules that share a clock with other modules, the LPSC controls the clock gating.

Table 6-6 shows the C665x clock domains.

Table 6-6. Clock Domains

LPSC NUMBER	MODULE(S)	NOTES
0	Shared LPSC for all peripherals other than those listed in this table	Always on
1	SmartReflex	Always on
2	DDR3 EMIF	Always on
3	EMAC	Software control
4	VCP2_A	Software control
5	Debug Subsystem and Tracers	Software control
6	Per-core TETB and System TETB	Software control
7	Reserved	Reserved
8	Reserved	Reserved
9	Reserved	Reserved
10	PCIe	Software control
11	SRIO	Software control
12	HyperLink	Software control
13	Reserved	Reserved
14	MSMC RAM	Software control
15	Reserved	Reserved
16	Reserved	Reserved
17	Reserved	Reserved
18	Reserved	Reserved
19	TCP3d	Software control
20	VCP2_1	Software control
21	Reserved	Reserved
22	Reserved	Reserved
23	C66x CorePac 0 and Timer 0	Software control
24	C66x CorePac 1 (C6657 only) and Timer 1	Software control
No LPSC	Bootcfg, PSC, and PLL controller	These modules do not use LPSC.

Copyright © 2012–2016, Texas Instruments Incorporated

6.4.3 PSC Register Memory Map

Table 6-7 shows the PSC Register memory map.

Table 6-7. PSC Register Memory Map

OFFSET	REGISTER	DESCRIPTION
0x000	PID	Peripheral Identification Register
0x004 - 0x010	Reserved	Reserved
0x014	VCNTLID	Voltage Control Identification Register(1)
0x018 - 0x11C	Reserved	Reserved
0x120	PTCMD	Power Domain Transition Command Register
0x124	Reserved	Reserved
0x128	PTSTAT	Power Domain Transition Status Register
0x12C - 0x1FC	Reserved	Reserved
0x200	PDSTAT0	Power Domain Status Register 0 (AlwaysOn)
0x204	PDSTAT1	Power Domain Status Register 1 (Per-core TETB and System TETB)
0x208	PDSTAT2	Power Domain Status Register 2 (Reserved)
0x20C	PDSTAT3	Power Domain Status Register 3 (PCIe)
0x210	PDSTAT4	Power Domain Status Register 4 (SRIO)
0x214	PDSTAT5	Power Domain Status Register 5 (Hyperlink)
0x218	PDSTAT6	Power Domain Status Register 6 (Reserved)
0x21C	PDSTAT7	Power Domain Status Register 7 (MSMC RAM)
0x220	PDSTAT8	Power Domain Status Register 8 (Reserved)
0x224	PDSTAT9	Power Domain Status Register 9 (Reserved)
0x228	PDSTAT10	Power Domain Status Register 10 (Reserved)
0x22C	PDSTAT11	Power Domain Status Register 11 (TCP3d)
0x230	PDSTAT12	Power Domain Status Register 12 (VCP2_B)
0x234	PDSTAT13	Power Domain Status Register 13 (C66x CorePac 0)
0x238	PDSTAT14	Power Domain Status Register 14 (C66x CorePac 1) (C6657) or Reserved (C6655)
0x23C	Reserved	Reserved
0x240 - 0x2FC	Reserved	Reserved
0x300	PDCTL0	Power Domain Control Register 0 (AlwaysOn)
0x304	PDCTL1	Power Domain Control Register 1 (Per-core TETB and System TETB)
0x308	PDCTL2	Power Domain Control Register 2 (Reserved)
0x30C	PDCTL3	Power Domain Control Register 3 (PCIe)
0x310	PDCTL4	Power Domain Control Register 4 (SRIO)
0x314	PDCTL5	Power Domain Control Register 5 (HyperLink)
0x318	PDCTL6	Power Domain Control Register 6 (Reserved)
0x31C	PDCTL7	Power Domain Control Register 7 (MSMC RAM)
0x320	PDCTL8	Power Domain Control Register 8 (Reserved)
0x324	PDCTL9	Power Domain Control Register 9 (Reserved)
0x328	PDCTL10	Power Domain Control Register 10 (Reserved)
0x32C	PDCTL11	Power Domain Control Register 11 (TCP3d)
0x330	PDCTL12	Power Domain Control Register 12 (VCP2_B)
0x334	PDCTL13	Power Domain Control Register 13 (C66x CorePac 0)
0x338	PDCTL14	Power Domain Control Register 14 (C66x CorePac 1) (C6657) or Reserved (C6655)
0x33C	Reserved	Reserved
0x340 - 0x7FC	Reserved	Reserved
0x800	MDSTAT0	Module Status Register 0 (Never Gated)

(1) VCNTLID register is available for debug purpose only.

Copyright © 2012–2016, Texas Instruments Incorporated

Table 6-7. PSC Register Memory Map (continued)

OFFSET	REGISTER	DESCRIPTION
0x804	MDSTAT1	Module Status Register 1 (SmartReflex)
0x808	MDSTAT2	Module Status Register 2 (DDR3 EMIF)
0x80C	MDSTAT3	Module Status Register 3 (EMAC)
0x810	MDSTAT4	Module Status Register 4 (VCP2_A)
0x814	MDSTAT5	Module Status Register 5 (Debug Subsystem and Tracers)
0x818	MDSTAT6	Module Status Register 6 (Per-core TETB and System TETB)
0x81C	MDSTAT7	Module Status Register 7 (Reserved)
0x820	MDSTAT8	Module Status Register 8 (Reserved)
0x824	MDSTAT9	Module Status Register 9 (Reserved)
0x828	MDSTAT10	Module Status Register 10 (PCIe)
0x82C	MDSTAT11	Module Status Register 11 (SRIO)
0x830	MDSTAT12	Module Status Register 12 (HyperLink)
0x834	MDSTAT13	Module Status Register 13 (Reserved)
0x838	MDSTAT14	Module Status Register 14 (MSMC RAM)
0x83C	MDSTAT15	Module Status Register 15 (Reserved)
0x840	MDSTAT16	Module Status Register 16 (Reserved)
0x844	MDSTAT17	Module Status Register 17 (Reserved)
0x848	MDSTAT18	Module Status Register 18 (Reserved)
0x84C	MDSTAT19	Module Status Register 19 (TCP3d)
0x850	MDSTAT20	Module Status Register 20 (VCP2_B)
0x854	MDSTAT21	Module Status Register 11 (Reserved)
0x858	MDSTAT22	Module Status Register 22(Reserved)
0x85C	MDSTAT23	Module Status Register 23(C66x CorePac 0 and Timer 0)
0x860	MDSTAT24	Module Status Register 24(C66x CorePac 1 [C6657 only] and Timer 1)
0x864 - 0x9FC	Reserved	Reserved
0xA00	MDCTL0	Module Control Register 0 (Never Gated)
0xA04	MDCTL1	Module Control Register 1 (SmartReflex)
0xA08	MDCTL2	Module Control Register 2 (DDR3 EMIF)
0xA0C	MDCTL3	Module Control Register 3 (EMAC)
0xA10	MDCTL4	Module Control Register 4 (VCP2_A)
0xA14	MDCTL5	Module Control Register 5 (Debug Subsystem and Tracers)
0xA18	MDCTL6	Module Control Register 6 (Per-core TETB and System TETB)
0xA1C	MDCTL7	Module Control Register 7 (Reserved)
0xA20	MDCTL8	Module Control Register 8 (Reserved)
0xA24	MDCTL9	Module Control Register 9 (Reserved)
0xA28	MDCTL10	Module Control Register 10 (PCIe)
0xA2C	MDCTL11	Module Control Register 11 (SRIO)
0xA30	MDCTL12	Module Control Register 12 (HyperLink)
0xA34	MDCTL13	Module Control Register 13 (Reserved)
0xA38	MDCTL14	Module Control Register 14 (MSMC RAM)
0xA3C	MDCTL15	Module Control Register 15 (Reserved)
0xA40	MDCTL16	Module Control Register 16 (Reserved)
0xA44	MDCTL17	Module Control Register 17 (Reserved)
0xA48	MDCTL18	Module Control Register 18 (Reserved)
0xA4C	MDCTL19	Module Control Register 19 (TCP3d)
0xA50	MDCTL20	Module Control Register 20 (VCP2_1)
0xA54	MDCTL21	Module Control Register 21(Reserved)

Copyright © 2012–2016, Texas Instruments Incorporated

Table 6-7. PSC Register Memory Map (continued)

OFFSET	REGISTER	DESCRIPTION
0xA58	MDCTL22	Module Control Register 22(Reserved)
0xA5C	MDCTL23	Module Control Register 23(C66x CorePac 0 and Timer 0)
0xA60	MDCTL24	Module Control Register 24(C66x CorePac 1 [C6657 only] and Timer 1)
0xA5C - 0xFFC	Reserved	Reserved

6.5 Reset Controller

The reset controller detects the different type of resets supported on the C665x device and manages the distribution of those resets throughout the device.

The device has several types of resets:

- Power-on reset
- Hard reset
- Soft reset
- CPU local reset

Table 6-8 explains further the types of reset, the reset initiator, and the effects of each reset on the device. For more information on the effects of each reset on the PLL controllers and their clocks, see Section 5.7.2.

Table 6-8. Reset Types

RESET TYPE	INITIATOR	EFFECT ON DEVICE WHEN RESET OCCURS	RESETSTAT PIN STATUS
POR (Power On Reset)	POR pin active low RESETFULL pin active low	Total reset of the chip. Everything on the device is reset to its default state in response to this. Activates the POR signal on chip, which is used to reset test/EMU logic. Boot configurations are latched. ROM boot process is initiated.	Toggles RESETSTAT pin
Hard reset	RESET pin active low Emulation PLLCTL register (RSCTRL) Watchdog timers	Resets everything except for test/EMU logic and reset isolation modules. Emulator and reset Isolation modules stay alive during this reset. This reset is also different from POR in that the PLLCTL assumes power and clocks are stable when device reset is asserted. Boot configurations are not latched. ROM boot process is initiated.	Toggles RESETSTAT pin
Soft reset	RESET pin active low PLLCTL register (RSCTRL) Watchdog timers	Software can program these initiators to be hard or soft. Hard reset is the default, but can be programmed to be soft reset. Soft reset will behave like hard reset except that EMIF16 MMRs, DDR3 EMIF MMRs, sticky bits in PCIe MMRs, and external memory contents are retained. Boot configurations are not latched. ROM boot process is initiated.	Toggles RESETSTAT pin
C66x CorePac local reset	Software (through LPSC MMR) Watchdog timers LRESET pin	MMR bit in LPSC controls C66x CorePac local reset. Used by watchdog timers (in the event of a time-out) to reset C66x CorePac. Can also be initiated by LRESET device pin. C66x CorePac memory system and slave DMA port are still alive when C66x CorePac is in local reset. Provides a local reset of the C66x CorePac, without destroying clock alignment or memory contents. Does not initiate ROM boot process.	Does not toggle RESETSTAT pin

Copyright © 2012–2016, Texas Instruments Incorporated

6.5.1 Power-on Reset

Power-on reset is used to reset the entire device, including the test and emulation logic.

Power-on reset is initiated by the following:

1. $\overline{\text{POR}}$ pin
2. $\overline{\text{RESETFULL}}$ pin

During power-up, the $\overline{\text{POR}}$ pin must be asserted (driven low) until the power supplies have reached their normal operating conditions. A $\overline{\text{RESETFULL}}$ pin is also provided to allow the onboard host to reset the entire device including the reset isolated logic. The assumption is that the device is already powered up and hence, unlike the $\overline{\text{POR}}$ pin, the $\overline{\text{RESETFULL}}$ pin will be driven by the onboard host control instead of the power-good circuitry. For power-on reset, the Main PLL Controller comes up in bypass mode and the PLL is not enabled. Other resets do not affect the state of the PLL or the dividers in the PLL controller.

The following sequence must be followed during a power-on reset:

1. Wait for all power supplies to reach normal operating conditions while keeping the $\overline{\text{POR}}$ pin asserted (driven low). While $\overline{\text{POR}}$ is asserted, all pins except $\overline{\text{RESETSTAT}}$ will be set to high-impedance. After the $\overline{\text{POR}}$ pin is deasserted (driven high), all Z group pins, low group pins, and high group pins are set to their reset state and will remain at their reset state until otherwise configured by their respective peripheral. All peripherals that are power managed, are disabled after a power-on reset and must be enabled through the Device State Control Registers (for more details, see Table 8-2).
2. Clocks are reset, and they are propagated throughout the device to reset any logic that was using reset synchronously. All logic is now reset and $\overline{\text{RESETSTAT}}$ will be driven low indicating that the device is in reset.
3. $\overline{\text{POR}}$ must be held active until all supplies on the board are stable then for at least an additional time for the chip-level PLLs to lock.
4. The $\overline{\text{POR}}$ pin can now be deasserted. Reset-sampled pin values are latched at this point. The chip level PLLs are taken out of reset and begin their locking sequence, and all power-on device initialization also begins.
5. After device initialization is complete, the $\overline{\text{RESETSTAT}}$ pin is deasserted (driven high). By this time, the DDR3 PLL has already completed its locking sequence and is outputting a valid clock. The system clocks of both PLL controllers are allowed to finish their current cycles and then paused for 10 cycles of their respective system reference clocks. After the pause, the system clocks are restarted at their default divide by settings.
6. The device is now out of reset and device execution begins as dictated by the selected boot mode.

NOTE

To most of the device, reset is deasserted only when the $\overline{\text{POR}}$ and $\overline{\text{RESET}}$ pins are both deasserted (driven high). Therefore, in the sequence described above, if the $\overline{\text{RESET}}$ pin is held low past the low period of the $\overline{\text{POR}}$ pin, most of the device will remain in reset. The $\overline{\text{RESET}}$ pin should not be tied together with the $\overline{\text{POR}}$ pin.

Copyright © 2012–2016, Texas Instruments Incorporated

6.5.2 Hard Reset

A hard reset will reset everything on the device except the PLLs, test, emulation logic, and reset isolation modules. $\overline{\text{POR}}$ should also remain deasserted during this time.

Hard reset is initiated by the following:

- $\overline{\text{RESET}}$ pin
- RSCTRL register in PLLCTL
- Watchdog timer
- Emulation

All the above initiators, by default, are configured to act as a hard reset. Except emulation, all the other three initiators can be configured as soft resets in the RSCFG register in PLLCTL.

The following sequence must be followed during a hard reset:

1. The $\overline{\text{RESET}}$ pin is pulled active low for a minimum of 24 input clock cycles. During this time, the $\overline{\text{RESET}}$ signal is able to propagate to all modules (except those specifically mentioned above). All I/O are Hi-Z for modules affected by $\overline{\text{RESET}}$, to prevent off-chip contention during the warm reset.
2. Once all logic is reset, $\overline{\text{RESETSTAT}}$ is driven active to denote that the device is in reset.
3. The $\overline{\text{RESET}}$ pin can now be released. A minimal device initialization begins to occur. Configuration pins are not relatched and clocking is unaffected within the device.
4. After device initialization is complete, the $\overline{\text{RESETSTAT}}$ pin is deasserted (driven high).

NOTE

The $\overline{\text{POR}}$ pin should be held inactive (high) throughout the warm reset sequence. Otherwise, if $\overline{\text{POR}}$ is activated (brought low), the minimum $\overline{\text{POR}}$ pulse width must be met. The $\overline{\text{RESET}}$ pin should not be tied together with the $\overline{\text{POR}}$ pin.

Copyright © 2012–2016, Texas Instruments Incorporated

6.5.3 Soft Reset

A soft reset will behave like a hard reset except that the PCIe MMR sticky bits and DDR3 EMIF MMRs contents are retained. $\overline{\text{POR}}$ should also remain deasserted during this time.

Soft reset is initiated by the following:

- $\overline{\text{RESET}}$ pin
- RSCTRL register in PLLCTL
- Watchdog timer

All the above initiators by default are configured to act as hard reset. Except emulation, all the other three initiators can be configured as soft resets in the RSCFG register in PLLCTL.

In the case of a soft reset, the clock logic or the power control logic of the peripherals are not affected, and, therefore, the enabled/disabled state of the peripherals is not affected. On a soft reset, the DDR3 memory controller registers are not reset. In addition, the DDR3 SDRAM memory content is retained if the user places the DDR3 SDRAM in self-refresh mode before invoking the soft reset.

During a soft reset, the following happens:

1. The $\overline{\text{RESETSTAT}}$ pin goes low to indicate an internal reset is being generated. The reset is allowed to propagate through the system. Internal system clocks are not affected. PLLs also remain locked.
2. After device initialization is complete, the $\overline{\text{RESETSTAT}}$ pin is deasserted (driven high). In addition, the PLL controllers pause their system clocks for about 8 cycles.
   - At this point:
     - The state of the peripherals before the soft reset is not changed.
     - The I/O pins are controlled as dictated by the DEVSTAT register.
     - The DDR3 MMRs and PCIe MMR sticky bits retain their previous values. Only the DDR3 Memory Controller and PCIe state machines are reset by the soft reset.
     - The PLL controllers are operating in the mode prior to soft reset. System clocks are unaffected.

The boot sequence is started after the system clocks are restarted. Because the configuration pins are not latched with a system reset, the previous values, as shown in the DEVSTAT register, are used to select the boot mode.

6.5.4 Local Reset

The local reset can be used to reset a particular CorePac without resetting any other chip components.

Local reset is initiated by the following (for more details see the Phase-Locked Loop (PLL) for KeyStone Devices User's Guide:

- $\overline{\text{LRESET}}$ pin
- Based on the setting of the CORESEL[2:0] and RSTCFG register in the PLL controller, one of the following should be caused by the watchdog timer. See Section 6.6.2.8 and Section 6.9.2:
  - Local Reset
  - NMI
  - NMI followed by a time delay and then a local reset for the CorePac selected
  - Hard Reset by requesting reset through PLLCTL
- LPSC MMRs (memory-mapped registers)

6.5.5 Reset Priority

If any of the reset sources in Section 6.5.4 occur simultaneously, the PLLCTL processes only the highest priority reset request. The reset request priorities are as follows (high to low):

- Power-on reset
- Hard/soft reset

Copyright © 2012–2016, Texas Instruments Incorporated

6.5.6 Reset Controller Register

The reset controller register is part of the PLLCTL MMRs. All C665x device-specific MMRs are covered in Section 6.6.3. For more details on these registers and how to program them, see the Phase-Locked Loop (PLL) for KeyStone Devices User's Guide.

6.6 Main PLL and PLL Controller

This section provides a description of the Main PLL and the PLL controller. For details on the operation of the PLL controller module, see the Phase-Locked Loop (PLL) for KeyStone Devices User's Guide.

The Main PLL is controlled by the standard PLL controller. The PLL controller manages the clock ratios, alignment, and gating for the system clocks to the device. Figure 6-3 shows a block diagram of the main PLL and the PLL controller.

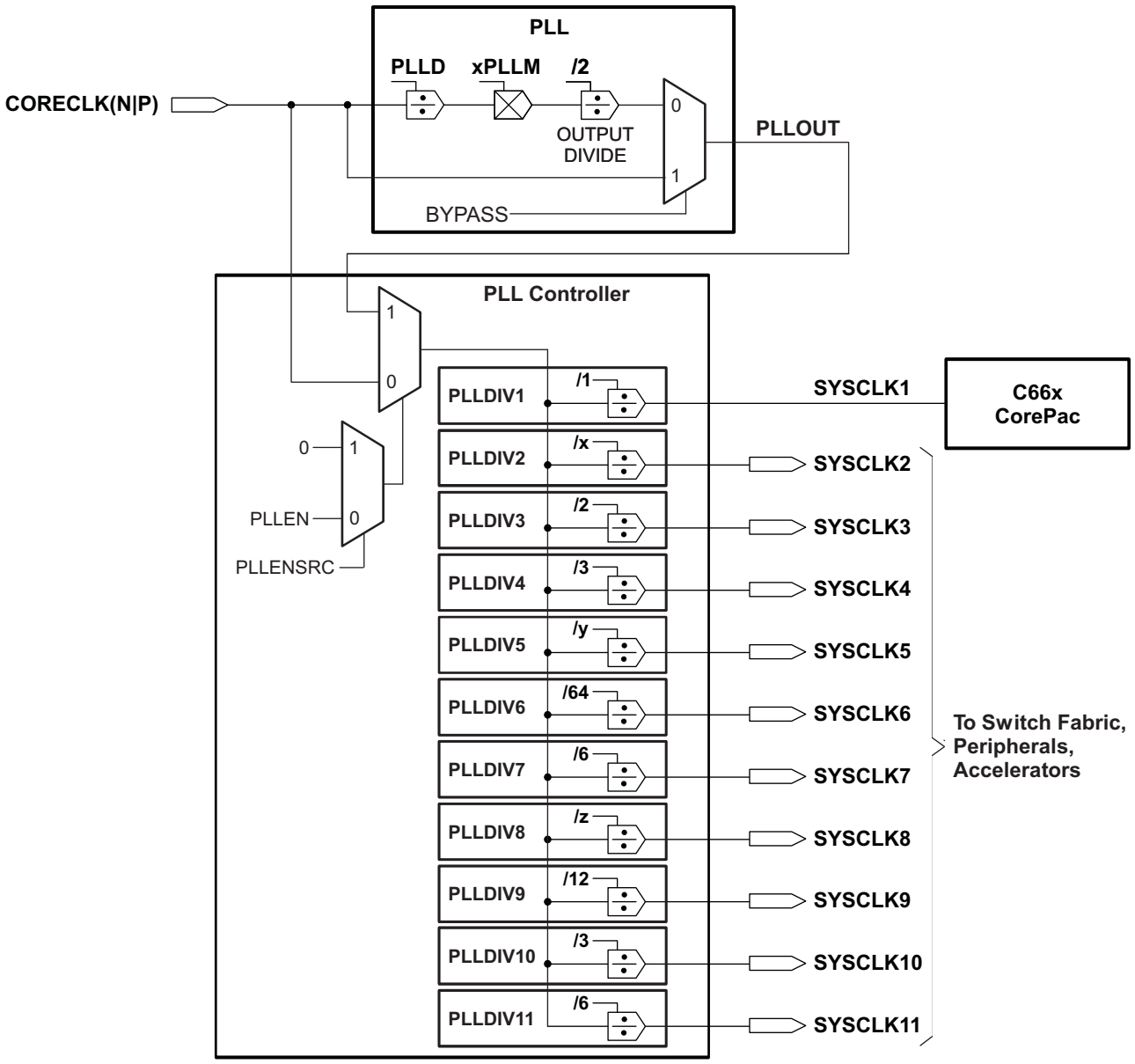

Figure 6-3. Main PLL and PLL Controller

Copyright © 2012–2016, Texas Instruments Incorporated

NOTE

PLLM[5:0] bits of the multiplier are controlled by the PLLM register inside the PLL controller and PLLM[12:6] bits are controlled by the chip-level MAINPLLCTL0 register. The complete 13-bit value is latched when the GO operation is initiated in the PLL controller. Only PLLDIV2, PLLDIV5, and PLLDIV8 are programmable on the C665x device. See the Phase-Locked Loop (PLL) for KeyStone Devices User's Guide for more details on how to program the PLL controller.

The multiplication and division ratios within the PLL and the post-division for each of the chip-level clocks are determined by a combination of this PLL and the PLL controller. The PLL controller also controls reset propagation through the chip, clock alignment, and test points. The PLL controller monitors the PLL status and provides an output signal indicating when the PLL is locked.

Main PLL power is supplied externally through the Main PLL power-supply pin (AVDDA1). An external EMI filter circuit must be added to all PLL supplies. See the Hardware Design Guide for KeyStone Devices for detailed recommendations. For the best performance, TI recommends placing all the PLL external components on one side of the board without jumpers, switches, or components other than those shown. For reduced PLL jitter, maximize the spacing between switching signal traces and the PLL external components (C1, C2, and the EMI Filter).

The minimum SYSCLK rise and fall times should also be observed. For the input clock timing requirements, see Section 5.7.4.

NOTE

The PLL controller as described in the Phase-Locked Loop (PLL) for KeyStone Devices User's Guide includes a superset of features, some of which are not supported on the C665x device. The following sections describe the registers that are supported; it should be assumed that any registers not included in these sections is not supported by the device. Furthermore, only the bits within the registers described here are supported. Avoid writing to any reserved memory location or changing the value of reserved bits.

Copyright © 2012–2016, Texas Instruments Incorporated

6.6.1 Main PLL Controller Device-Specific Information

6.6.1.1 Internal Clocks and Maximum Operating Frequencies

The Main PLL, used to drive the CorePacs, the switch fabric, and a majority of the peripheral clocks (all but the DDR3) requires a PLL controller to manage the various clock divisions, gating, and synchronization. The PLL controller of the Main PLL has several SYSCLK outputs that follow, as well as the clock description. Each SYSCLK has a corresponding divider that divides down the output clock of the PLL. Dividers are not programmable unless explicitly mentioned in the following description.

- SYSCLK1: Full-rate clock for the CorePacs.
- SYSCLK2: 1/x-rate clock for CorePac emulation. The default rate for this is 1/3. It is programmable from /1 to /32, where this clock does not violate the max of 350 MHz. The SYSCLK2 can be turned off by software.
- SYSCLK3: 1/2-rate clock used to clock the MSMC, HyperLink, and DDR EMIF.
- SYSCLK4: 1/3-rate clock for the switch fabrics and fast peripherals. The Debug_SS and ETBs use this as well.
- SYSCLK5: 1/y-rate clock for the system trace module only. The default rate for this is 1/5. It is configurable and the max configurable clock is 210 MHz and min configurable clock is 32 MHz. The SYSCLK5 can be turned off by software.
- SYSCLK6: 1/64-rate clock. 1/64 rate clock (emif_ptv) used to clock the PVT-compensated buffers for DDR3 EMIF.
- SYSCLK7: 1/6-rate clock for slow peripherals (GPIO, UART, Timer, I^2C, SPI, EMIF16, McBSP, and so forth.) and sources the SYSCLKOUT output pin.
- SYSCLK8: 1/z-rate clock. This clock is used as slow_sysclk in the system. Default is 1/64. It is programmable from /24 to /80.
- SYSCLK9: 1/12-rate clock for SmartReflex.
- SYSCLK10: 1/3-rate clock for SRIO only.
- SYSCLK11: 1/6-rate clock for PSC only.

Only SYSCLK2, SYSCLK5, and SYSCLK8 are programmable on the C665x device.

NOTE

In case any of the other programmable SYSCLKs are set slower than 1/64 rate, then SYSCLK8 (SLOW_SYSCLK) must be programmed to either match, or be slower than, the slowest SYSCLK in the system.

6.6.1.2 Main PLL Controller Operating Modes

The Main PLL controller has two modes of operation: bypass mode and PLL mode. The mode of operation is determined by BYPASS bit of the PLL Secondary Control Register (SECCTL). In PLL mode, SYSCLK1 is generated from the PLL output using the values set in PLLM and PLLD bit fields in the MAINPLLCTL0 Register. In bypass mode, PLL input is fed directly out as SYSCLK1.

All hosts must hold off accesses to the DSP while the frequency of its internal clocks is changing. A mechanism must be in place such that the DSP notifies the host when the PLL configuration has completed.

Copyright © 2012–2016, Texas Instruments Incorporated

6.6.2 PLL Controller Memory Map

The memory map of the PLL controller is shown in Table 6-9. C665x-specific PLL Controller register definitions can be found in the sections following Table 6-9. For other registers in the table, see the Phase-Locked Loop (PLL) for KeyStone Devices User's Guide.

NOTE

Only registers documented here are accessible on the C665x. Other addresses in the PLL controller memory map including the reserved registers should not be modified. Furthermore, only the bits within the registers described here are supported. Avoid writing to any reserved memory location or changing the value of reserved bits. It is recommended to use read-modify-write sequence to make any changes to the valid bits in the register.

Table 6-9. PLL Controller Registers (Including Reset Controller)

HEX ADDRESS RANGE	FIELD	REGISTER NAME
0231 0000 - 0231 00E3	-	Reserved
0231 00E4	RSTYPE	Reset Type Status Register (Reset Controller)
0231 00E8	RSTCTRL	Software Reset Control Register (Reset Controller)
0231 00EC	RSTCFG	Reset Configuration Register (Reset Controller)
0231 00F0	RSISO	Reset Isolation Register (Reset Controller)
0231 00F0 - 0231 00FF	-	Reserved
0231 0100	PLLCTL	PLL Control Register
0231 0104	-	Reserved
0231 0108	SECCTL	PLL Secondary Control Register
0231 010C	-	Reserved
0231 0110	PLLM	PLL Multiplier Control Register
0231 0114	-	Reserved
0231 0118	PLLDIV1	Reserved
0231 011C	PLLDIV2	PLL Controller Divider 2 Register
0231 0120	PLLDIV3	Reserved
0231 0124	-	Reserved
0231 0128	-	Reserved
0231 012C - 0231 0134	-	Reserved
0231 0138	PLLCMD	PLL Controller Command Register
0231 013C	PLLSTAT	PLL Controller Status Register
0231 0140	ALNCTL	PLL Controller Clock Align Control Register
0231 0144	DCHANGE	PLLDIV Ratio Change Status Register
0231 0148	CKEN	Reserved
0231 014C	CKSTAT	Reserved
0231 0150	SYSTAT	SYSCLK Status Register
0231 0154 - 0231 015C	-	Reserved
0231 0160	PLLDIV4	Reserved
0231 0164	PLLDIV5	PLL Controller Divider 5 Register
0231 0168	PLLDIV6	Reserved
0231 016C	PLLDIV7	Reserved
0231 0170	PLLDIV8	PLL Controller Divider 8 Register
0231 0174 - 0231 0193	PLLDIV9 - PLLDIV16	Reserved
0231 0194 - 0231 01FF	-	Reserved

Copyright © 2012–2016, Texas Instruments Incorporated

6.6.2.1 PLL Secondary Control Register (SECCTL)

The PLL Secondary Control Register contains extra fields to control the Main PLL and is shown in Figure 6-4 and described in Table 6-10.

Figure 6-4. PLL Secondary Control Register (SECCTL)

31	24	23	22	19	18	0
Reserved		BYPASS	OUTPUT_DIVIDE		Reserved	
R-0000 0000		RW-0	RW-0001		RW-001 0000 0000 0000 0000	

Legend: R/W = Read/Write; R = Read only; -*n* = value after reset

Table 6-10. PLL Secondary Control Register (SECCTL) Field Descriptions

BIT	FIELD	DESCRIPTION
31-24	Reserved	Reserved
23	BYPASS	Main PLL Bypass Enable • 0 = Main PLL Bypass disabled. • 1 = Main PLL Bypass enabled.
22-19	OUTPUT_DIVIDE	Output Divider ratio bits. • 0h = ÷1. Divide frequency by 1. • 1h = ÷2. Divide frequency by 2. • 2h - Fh = Reserved.
18-0	Reserved	Reserved

Copyright © 2012–2016, Texas Instruments Incorporated

6.6.2.2 PLL Controller Divider Register (PLLDIV2, PLLDIV5, PLLDIV8)

The PLL Controller Divider Registers (PLLDIV2, PLLDIV5, and PLLDIV8) are shown in Figure 6-5 and described in Table 6-11. The default values of the RATIO field on a reset for PLLDIV2, PLLDIV5, and PLLDIV8 are different and mentioned in the footnote of Figure 6-5.

Figure 6-5. PLL Controller Divider Register (PLLDIVn)

31	16	15	14	8	7	0
Reserved		D*n*(1) EN	Reserved		RATIO	
R-0		R/W-1	R-0		R/W-n(2)	

Legend: R/W = Read/Write; R = Read only; -*n* = value after reset

(1) D2EN for PLLDIV2; D5EN for PLLDIV5; D8EN for PLLDIV8
(2) n=02h for PLLDIV2; n=04h for PLLDIV5; n=3Fh for PLLDIV8

Table 6-11. PLL Controller Divider Register (PLLDIVn) Field Descriptions

BIT	FIELD	DESCRIPTION
31-16	Reserved	Reserved.
15	D*n*EN	Divider D*n* enable bit. (see footnote of Figure 6-5) • 0 = Divider *n* is disabled. • 1 = No clock output. Divider *n* is enabled.
14-8	Reserved	Reserved. The reserved bit location is always read as 0. A value written to this field has no effect.
7-0	RATIO	Divider ratio bits. (see footnote of Figure 6-5) • 0h = ÷1. Divide frequency by 1. • 1h = ÷2. Divide frequency by 2. • 2h = ÷3. Divide frequency by 3. • 3h = ÷4. Divide frequency by 4. • 4h - 4Fh = ÷5 to ÷80. Divide frequency by 5 to divide frequency by 80.

Copyright © 2012–2016, Texas Instruments Incorporated

6.6.2.3 PLL Controller Clock Align Control Register (ALNCTL)

The PLL controller clock align control register (ALNCTL) is shown in Figure 6-6 and described in Table 6-12.

Figure 6-6. PLL Controller Clock Align Control Register (ALNCTL)

31 – 8	7	6 – 5	4	3 – 2	1	0
Reserved	ALN8	Reserved	ALN5	Reserved	ALN2	Reserved
R-0	R/W-1	R-0	R/W-1	R-0	R/W-1	R-0

Legend: R/W = Read/Write; R = Read only; -*n* = value after reset, for reset value

Table 6-12. PLL Controller Clock Align Control Register (ALNCTL) Field Descriptions

BIT	FIELD	DESCRIPTION
31-8	Reserved	Reserved. The reserved bit location is always read as 0. A value written to this field has no effect.
7	ALN8	SYSCLK*n* alignment. Do not change the default values of these fields. • 0 = Do not align SYSCLK*n* to other SYSCLKs during GO operation. If SYS*n* in DCHANGE is set, SYSCLK*n* switches to the new ratio immediately after the GOSET bit in PLLCMD is set. • 1 = Align SYSCLK*n* to other SYSCLKs selected in ALNCTL when the GOSET bit in PLLCMD is set and SYS*n* in DCHANGE is 1. The SYSCLK*n* rate is set to the ratio programmed in the RATIO bit in PLLDIV*n*.
6-5	Reserved	Reserved. The reserved bit location is always read as 0. A value written to this field has no effect.
4	ALN5	SYSCLK*n* alignment. Do not change the default values of these fields. • 0 = Do not align SYSCLK*n* to other SYSCLKs during GO operation. If SYS*n* in DCHANGE is set, SYSCLK*n* switches to the new ratio immediately after the GOSET bit in PLLCMD is set. • 1 = Align SYSCLK*n* to other SYSCLKs selected in ALNCTL when the GOSET bit in PLLCMD is set and SYS*n* in DCHANGE is 1. The SYSCLK*n* rate is set to the ratio programmed in the RATIO bit in PLLDIV*n*.
3-2	Reserved	Reserved. The reserved bit location is always read as 0. A value written to this field has no effect.
1	ALN2	SYSCLK*n* alignment. Do not change the default values of these fields. • 0 = Do not align SYSCLK*n* to other SYSCLKs during GO operation. If SYS*n* in DCHANGE is set, SYSCLK*n* switches to the new ratio immediately after the GOSET bit in PLLCMD is set. • 1 = Align SYSCLK*n* to other SYSCLKs selected in ALNCTL when the GOSET bit in PLLCMD is set and SYS*n* in DCHANGE is 1. The SYSCLK*n* rate is set to the ratio programmed in the RATIO bit in PLLDIV*n*.
0	Reserved	Reserved. The reserved bit location is always read as 0. A value written to this field has no effect.

Copyright © 2012–2016, Texas Instruments Incorporated

6.6.2.4 PLLDIV Divider Ratio Change Status Register (DCHANGE)

When a different ratio is written to the PLLDIV*n* registers, the PLLCTL flags the change in the DCHANGE Status Register. During the GO operation, the PLL controller will change only the divide ratio of the SYSCLKs with the bit set in DCHANGE. The ALNCTL Register determines if that clock also must be aligned to other clocks. The PLLDIV divider ratio change status register is shown in Figure 6-7 and described in Table 6-13.

Figure 6-7. PLLDIV Divider Ratio Change Status Register (DCHANGE)

31	8	7	6	5	4	3	2	1	0
Reserved		SYS8	Reserved		SYS5	Reserved		SYS2	Reserved
R-0		R/W-0	R-0		R/W-0	R-0		R/W-0	R-0

Legend: R/W = Read/Write; R = Read only; -*n* = value after reset, for reset value

Table 6-13. PLLDIV Divider Ratio Change Status Register (DCHANGE) Field Descriptions

BIT	FIELD	DESCRIPTION
31-8	Reserved	Reserved. The reserved bit location is always read as 0. A value written to this field has no effect.
7	SYS8	Identifies when the SYSCLK*n* divide ratio has been modified. • 0 = SYSCLK*n* ratio has not been modified. When GOSET is set, SYSCLK*n* will not be affected. • 1 = SYSCLK*n* ratio has been modified. When GOSET is set, SYSCLK*n* will change to the new ratio.
6-5	Reserved	Reserved. The reserved bit location is always read as 0. A value written to this field has no effect.
4	SYS5	Identifies when the SYSCLK*n* divide ratio has been modified. • 0 = SYSCLK*n* ratio has not been modified. When GOSET is set, SYSCLK*n* will not be affected. • 1 = SYSCLK*n* ratio has been modified. When GOSET is set, SYSCLK*n* will change to the new ratio.
3-2	Reserved	Reserved. The reserved bit location is always read as 0. A value written to this field has no effect.
1	SYS2	Identifies when the SYSCLK*n* divide ratio has been modified. • 0 = SYSCLK*n* ratio has not been modified. When GOSET is set, SYSCLK*n* will not be affected. • 1 = SYSCLK*n* ratio has been modified. When GOSET is set, SYSCLK*n* will change to the new ratio.
0	Reserved	Reserved. The reserved bit location is always read as 0. A value written to this field has no effect.

Copyright © 2012–2016, Texas Instruments Incorporated

6.6.2.5 SYSCLK Status Register (SYSTAT)

The SYSCLK Status Register (SYSTAT) shows the status of SYSCLK[11:1]. SYSTAT is shown in Figure 6-8 and described in Table 6-14.

Figure 6-8. SYSCLK Status Register (SYSTAT)

31	11	10	9	8	7	6	5	4	3	2	1	0
Reserved		SYS11 ON	SYS10 ON	SYS9ON	SYS8ON	SYS7ON	SYS6ON	SYS5ON	SYS4ON	SYS3ON	SYS2ON	SYS1ON
R-n		R-1	R-1	R-1	R-1	R-1	R-1	R-1	R-1	R-1	R-1	R-1

Legend: R/W = Read/Write; R = Read only; -*n* = value after reset

Table 6-14. SYSCLK Status Register (SYSTAT) Field Descriptions

BIT	FIELD	DESCRIPTION
31-11	Reserved	Reserved. The reserved bit location is always read as 0. A value written to this field has no effect.
10-0	SYS[N(1)]ON	SYSCLK[N] on status. • 0 = SYSCLK[N] is gated. • 1 = SYSCLK[N] is on.

(1) Where N = 1, 2, 3,....N (Not all these output clocks may be used on a specific device. For more information, see the device-specific data manual)

Copyright © 2012–2016, Texas Instruments Incorporated

6.6.2.6 Reset Type Status Register (RSTYPE)

The Reset Type Status (RSTYPE) Register latches the cause of the last reset. If multiple reset sources occur simultaneously, this register latches the highest priority reset source. The Reset Type Status Register is shown in Figure 6-9 and described in Table 6-15.

Figure 6-9. Reset Type Status Register (RSTYPE)

31 29	28	27 12	11 8	7 3	2	1	0
Reserved	EMU-RST	Reserved	WDRST[N]	Reserved	PLLCTRLRST	$\overline{\text{RESET}}$	POR
R-0	R-0	R-0	R-0	R-0	R-0	R-0	R-0

Legend: R = Read only; -*n* = value after reset

Table 6-15. Reset Type Status Register (RSTYPE) Field Descriptions

BIT	FIELD	DESCRIPTION
31-29	Reserved	Reserved. Read only. Always reads as 0. Writes have no effect.
28	EMU-RST	Reset initiated by emulation. • 0 = Not the last reset to occur. • 1 = The last reset to occur.
27-12	Reserved	Reserved. Read only. Always reads as 0. Writes have no effect.
11	WDRST3	Reset initiated by watchdog timer[N]. • 0 = Not the last reset to occur. • 1 = The last reset to occur.
10	WDRST2	Reset initiated by watchdog timer[N]. • 0 = Not the last reset to occur. • 1 = The last reset to occur.
9	WDRST1	Reset initiated by watchdog timer[N]. • 0 = Not the last reset to occur. • 1 = The last reset to occur.
8	WDRST0	Reset initiated by watchdog timer[N]. • 0 = Not the last reset to occur. • 1 = The last reset to occur.
7-3	Reserved	Reserved. Read only. Always reads as 0. Writes have no effect.
2	PLLCTLRST	Reset initiated by PLLCTL. • 0 = Not the last reset to occur. • 1 = The last reset to occur.
1	$\overline{\text{RESET}}$	$\overline{\text{RESET}}$ reset. • 0 = $\overline{\text{RESET}}$ was not the last reset to occur. • 1 = $\overline{\text{RESET}}$ was the last reset to occur.
0	POR	Power-on reset. • 0 = Power-on reset was not the last reset to occur. • 1 = Power-on reset was the last reset to occur.

Copyright © 2012–2016, Texas Instruments Incorporated

6.6.2.7 Reset Control Register (RSTCTRL)

This register contains a key that enables writes to the MSB of this register and the RSTCFG Register. The key value is 0x5A69. A valid key will be stored as 0x000C, any other key value is invalid. When the RSTCTRL or the RSTCFG is written, the key is invalidated. Every write must be set up with a valid key. The Software Reset Control Register (RSTCTRL) is shown in Figure 6-10 and described in Table 6-16.

Figure 6-10. Reset Control Register (RSTCTRL)

31	17	16	15	0
Reserved		SWRST	KEY	
R-0x0000		R/W-0x(1)	R/W-0x0003	

Legend: R = Read only; -*n* = value after reset;

(1) Writes are conditional based on valid key.

Table 6-16. Reset Control Register (RSTCTRL) Field Descriptions

BIT	FIELD	DESCRIPTION
31-17	Reserved	Reserved.
16	SWRST	Software reset • 0 = Reset • 1 = Not reset
15-0	KEY	Key used to enable writes to RSTCTRL and RSTCFG.

Copyright © 2012–2016, Texas Instruments Incorporated

6.6.2.8 Reset Configuration Register (RSTCFG)

This register is used to configure the type of reset initiated by $\overline{\text{RESET}}$, watchdog timer and the RSTCTRL Register of the PLL controller; that is, a hard reset or a soft reset. By default, these resets will be hard resets. The Reset Configuration Register (RSTCFG) is shown in Figure 6-11 and described in Table 6-17.

Figure 6-11. Reset Configuration Register (RSTCFG)

31	14	13	12	11	4	3	0
Reserved		PLLCTLRSTTYPE	$\overline{\text{RESET}}$TYPE	Reserved		WDTYPE[N (1)]	
R-0		R/W-0 (2)	R/W-0 2	R-0		R/W-0 2	

Legend: R = Read only; R/W = Read/Write; -*n* = value after reset

(1) Where N = 1, 2, 3,....N (Not all these output may be used on a specific device. For more information, see the device-specific data manual).
(2) Writes are conditional based on valid key. For details, see Section 6.6.2.7.

Table 6-17. Reset Configuration Register (RSTCFG) Field Descriptions

BIT	FIELD	DESCRIPTION
31-14	Reserved	Reserved.
13	PLLCTLRSTTYPE	PLL controller initiates a software-driven reset of type: • 0 = Hard reset (default) • 1 = Soft reset
12	$\overline{\text{RESET}}$TYPE	$\overline{\text{RESET}}$ initiates a reset of type: • 0 = Hard Reset (default) • 1 = Soft Reset
11-4	Reserved	Reserved.
3	WDTYPE3	Watchdog timer [N] initiates a reset of type: • 0 = Hard Reset (default) • 1 = Soft Reset
2	WDTYPE2	Watchdog timer [N] initiates a reset of type: • 0 = Hard Reset (default) • 1 = Soft Reset
1	WDTYPE1	Watchdog timer [N] initiates a reset of type: • 0 = Hard Reset (default) • 1 = Soft Reset
0	WDTYPE0	Watchdog timer [N] initiates a reset of type: • 0 = Hard Reset (default) • 1 = Soft Reset

Copyright © 2012–2016, Texas Instruments Incorporated

6.6.2.9 Reset Isolation Register (RSISO)

This register is used to select the module clocks that must maintain their clocking without pausing through non power-on reset. Setting any of these bits blocks reset to all PLLCTL registers in order to maintain current values of PLL multiplier, divide ratios, and other settings. Along with setting module specific bit in RSISO, the corresponding MDCTLx[12] bit also must be set in PSC to reset-isolate a particular module. For more information on MDCTLx Register, see the Power Sleep Controller (PSC) for KeyStone Devices User's Guide. The Reset Isolation Register (RSISO) is shown in Figure 6-12 and described in Table 6-18.

Figure 6-12. Reset Isolation Register (RSISO)

31	10	9	8	7	0
Reserved		SRIOISO	SRISO	Reserved	
R-0		R/W-0	R/W-0	R-0	

Legend: R = Read only; R/W = Read/Write; -*n* = value after reset

Table 6-18. Reset Isolation Register (RSISO) Field Descriptions

BIT	FIELD	DESCRIPTION
31-10	Reserved	Reserved.
9	SRIOISO	Isolate SRIO module • 0 = Not reset isolated • 1 = Reset Isolated
8	SRISO	Isolate SmartReflex • 0 = Not reset isolated • 1 = Reset Isolated
7-0	Reserved	Reserved.

NOTE

The boot ROM code will enable the reset isolation for both SRIO and SmartReflex modules during boot with the Reset Isolation Register. It is up to the user application to disable.

Copyright © 2012–2016, Texas Instruments Incorporated

6.6.3 Main PLL Control Register

The Main PLL uses two chip-level registers (MAINPLLCTL0 and MAINPLLCTL1) and the PLL controller for its configuration. These MMRs exist inside the Bootcfg space. To write to these registers, software should go through an unlocking sequence using KICK0/KICK1 registers. For valid configurable values into the MAINPLLCTL0 and MAINPLLCTL1 Registers, see Section 6.29. See Section 8.3.4 for the address location of the registers and locking and unlocking sequences for accessing the registers. The registers are reset on $\overline{\text{POR}}$ only. MAINPLLCTL0 is shown in Figure 6-13 and described in Table 6-19. MAINPLLCTL1 is shown in Figure 6-14 and described in Table 6-20.

Figure 6-13. Main PLL Control Register 0 (MAINPLLCTL0)

31 – 24	23 – 19	18 – 12	11 – 6	5 – 0
BWADJ[7:0]	Reserved	PLLM[12:6]	Reserved	PLLD
RW-0000 0101	RW-0000 0	RW-0000000	RW-000000	RW-000000

Legend: RW = Read/Write; -*n* = value after reset

Table 6-19. Main PLL Control Register 0 (MAINPLLCTL0) Field Descriptions

BIT	FIELD	DESCRIPTION
31-24	BWADJ[7:0]	BWADJ[11:8] and BWADJ[7:0] are located in separate registers. The combination (BWADJ[11:0]) should be programmed to a value related to PLLM[12:0] value based on the equation: BWADJ = ((PLLM+1)>>1) -1
23-19	Reserved	Reserved
18-12	PLLM[12:6]	A 13-bit bus that selects the values for the multiplication factor (see the following Note)
11-6	Reserved	Reserved
5-0	PLLD	A 6-bit bus that selects the values for the reference divider

Figure 6-14. Main PLL Control Register 1 (MAINPLLCTL1)

31 – 7	6	5 – 4	3 – 0
Reserved	ENSAT	Reserved	BWADJ[11:8]
RW-00000000000000000000000	RW-0	RW-00	RW-0000

Legend: RW = Read/Write; -*n* = value after reset

Table 6-20. Main PLL Control Register 1 (MAINPLLCTL1) Field Descriptions

BIT	FIELD	DESCRIPTION
31-7	Reserved	Reserved
6	ENSAT	Needs to be set to 1 for proper operation of PLL
5-4	Reserved	Reserved
3-0	BWADJ[11:8]	BWADJ[11:8] and BWADJ[7:0] are located in separate registers. The combination (BWADJ[11:0]) should be programmed to a value related to PLLM[12:0] value based on the equation: BWADJ = ((PLLM+1)>>1) -1

NOTE

PLLM[5:0] bits of the multiplier are controlled by the PLLM Register inside the PLL controller and PLLM[12:6] bits are controlled by the MAINPLLCTL0 chip-level register. The MAINPLLCTL0 Register PLLM[12:6] bits should be written just before writing to the PLLM Register PLLM[5:0] bits in the controller to have the complete 13-bit value latched when the GO operation is initiated in the PLL controller. See the Phase-Locked Loop (PLL) for KeyStone Devices User's Guide for the recommended programming sequence. Output divide ratio and bypass enable/disable of the Main PLL is controlled by the SECCTL Register in the PLL Controller. See the Section 6.6.2.1 for more details.

Copyright © 2012–2016, Texas Instruments Incorporated

6.6.4 Main PLL and PLL Controller Initialization Sequence

See the Phase-Locked Loop (PLL) for KeyStone Devices User's Guide for details on the initialization sequence for Main PLL and PLL Controller.

6.7 DDR3 PLL

The DDR3 PLL generates interface clocks for the DDR3 memory controller. When coming out of power-on reset, the DDR3 PLL is programmed to a valid frequency during the boot config before being enabled and used.

DDR3 PLL power is supplied externally through the Main PLL power-supply pin (AVDDA2). An external EMI filter circuit must be added to all PLL supplies. See the Hardware Design Guide for KeyStone Devices. For the best performance, TI recommends placing all the PLL external components on one side of the board without jumpers, switches, or components other than those shown. For reduced PLL jitter, maximize the spacing between switching signal traces and the PLL external components (C1, C2, and the EMI Filter).

Figure 6-15 shows the DDR3 PLL.

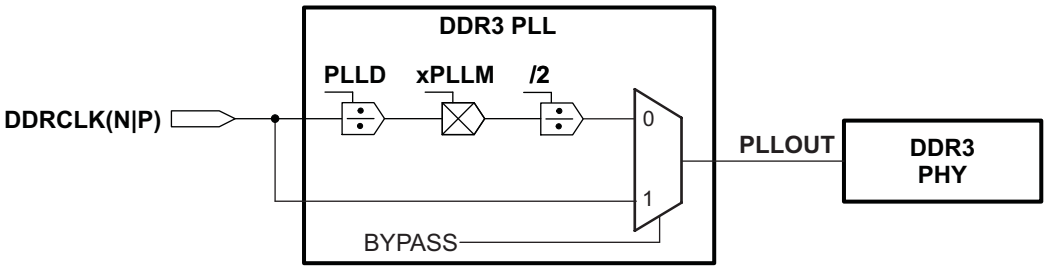

Figure 6-15. DDR3 PLL Block Diagram

6.7.1 DDR3 PLL Control Register

The DDR3 PLL, which is used to drive the DDR PHY for the EMIF, does not use a PLL controller. The DDR3 PLL can be controlled using the DDR3PLLCTL0 and DDR3PLLCTL1 Registers in the Bootcfg module. These MMRs exist inside the Bootcfg space. To write to these registers, software should go through an unlocking sequence using the KICK0/KICK1 registers. For suggested configurable values, see Section 8.3.4 for the address location of the registers and locking and unlocking sequences for accessing the registers. This register is reset on $\overline{\text{POR}}$ only. DDR3PLLCTL0 is shown in Figure 6-16 and described in Table 6-21. DDR3PLLCTL1 is shown in Figure 6-17 and described in Table 6-22.

Figure 6-16. DDR3 PLL Control Register 0 (DDR3PLLCTL0)[(1)]

31 – 24	23	22 – 19	18 – 6	5 – 0
BWADJ[7:0]	BYPASS	Reserved	PLLM	PLLD
RW,+0000 1001	RW,+0	RW,+0001	RW,+0000000010011	RW,+000000

Legend: RW = Read/Write; -*n* = value after reset

(1) This register is Reset on POR only. The regreset, reset and bgreset from PLL are all tied to a common pll0_ctrl_rst_n The pwrdn, regpwrdn, bgpwrdn are all tied to common pll0_ctrl_to_pll_pwrdn.

Copyright © 2012–2016, Texas Instruments Incorporated

Table 6-21. DDR3 PLL Control Register 0 Field Descriptions

BIT	FIELD	DESCRIPTION
31-24	BWADJ[7:0]	BWADJ[11:8] and BWADJ[7:0] are located in DDR3PLLCTL0 and DDR3PLLCTL1 registers. The combination (BWADJ[11:0]) should be programmed to a value related to PLLM[12:0] value based on the equation: BWADJ = ((PLLM+1)>>1) -1
23	BYPASS	Enable bypass mode • 0 = Bypass disabled • 1 = Bypass enabled
22-19	Reserved	Reserved
18-6	PLLM	A 13-bit bus that selects the values for the multiplication factor
5-0	PLLD	A 6-bit bus that selects the values for the reference divider

Figure 6-17. DDR3 PLL Control Register 1 (DDR3PLLCTL1)

31 14	13	12 7	6	5 4	3 0
Reserved	PLLRST	Reserved	ENSAT	Reserved	BWADJ[11:8]
RW-000000000000000000	RW-0	RW-000000	RW-0	R-0	RW-0000

Legend: RW = Read/Write; -*n* = value after reset

Table 6-22. DDR3 PLL Control Register 1 Field Descriptions

BIT	FIELD	DESCRIPTION
31-14	Reserved	Reserved
13	PLLRST	PLL reset bit. • 0 = PLL reset is released. • 1 = PLL reset is asserted.
12-7	Reserved	Reserved
6	ENSAT	Needs to be set to 1 for proper operation of the PLL
5-4	Reserved	Reserved
3-0	BWADJ[11:8]	BWADJ[11:8] and BWADJ[7:0] are located in separate registers. The combination (BWADJ[11:0]) should be programmed to a value related to PLLM[12:0] value based on the equation: BWADJ = ((PLLM+1)>>1) -1

6.7.2 DDR3 PLL Device-Specific Information

As shown in Figure 6-15, the output of DDR3 PLL (PLLOUT) is divided by 2 and directly fed to the DDR3 memory controller. The DDR3 PLL is affected by power-on reset. During power-on resets, the internal clocks of the DDR3 PLL are affected as described in Section 6.5. The DDR3 PLL is unlocked only during the power-up sequence and is locked by the time the RESETSTAT pin goes high. It does not lose lock during any of the other resets.

6.7.3 DDR3 PLL Initialization Sequence

See the Phase-Locked Loop (PLL) for KeyStone Devices User's Guide for details on the initialization sequence for DDR3 PLL.

Copyright © 2012–2016, Texas Instruments Incorporated

6.8 Enhanced Direct Memory Access (EDMA3) Controller

The primary purpose of the EDMA3 is to service user-programmed data transfers between two memory-mapped slave endpoints on the device. The EDMA3 services software-driven paging transfers (for example, data movement between external memory and internal memory), performs sorting or subframe extraction of various data structures, services event driven peripherals, and offloads data transfers from the device CPU.

There is one EDMA Channel Controller on the C665x device: EDMA3_CC. It has four transfer controllers: TC0, TC1, TC2, and TC3. In the context of this document, TCx associated with CC is referred to as EDMA3_CC_TCx. Each of the transfer controllers has a direct connection to the switch fabric. Section 9.2 lists the peripherals that can be accessed by the transfer controllers.

The EDMA3 Channel Controller includes the following features:

- Fully orthogonal transfer description
  - Three transfer dimensions:
    - Array (multiple bytes)
    - Frame (multiple arrays)
    - Block (multiple frames)
  - Single event can trigger transfer of array, frame, or entire block
  - Independent indexes on source and destination
- Flexible transfer definition:
  - Increment or FIFO transfer addressing modes
  - Linking mechanism allows for ping-pong buffering, circular buffering, and repetitive/continuous transfers, all with no CPU intervention
  - Chaining allows multiple transfers to execute with one event
- 512 PaRAM entries
  - Used to define transfer context for channels
  - Each PaRAM entry can be used as a DMA entry, QDMA entry, or link entry
- 64 DMA channels
  - Manually triggered (CPU writes to channel controller register), external event triggered, and chain triggered (completion of one transfer triggers another)
- Eight Quick DMA (QDMA) channels
  - Used for software-driven transfers
  - Triggered upon writing to a single PaRAM set entry
- Four transfer controllers and four event queues with programmable system-level priority
- Interrupt generation for transfer completion and error conditions
- Debug visibility
  - Queue watermarking/threshold allows detection of maximum usage of event queues
  - Error and status recording to facilitate debug

Copyright © 2012–2016, Texas Instruments Incorporated

6.8.1 EDMA3 Device-Specific Information

The EDMA supports two addressing modes: constant addressing and increment addressing mode. Constant addressing mode is applicable to a very limited set of use cases. For most applications, increment mode must be used. On the C665x, the EDMA can use constant addressing mode only with the Enhanced Viterbi-Decoder Coprocessor (VCP) and the Enhanced Turbo Decoder Coprocessor (TCP). Constant addressing mode is not supported by any other peripheral or internal memory in the device. Increment mode is supported by all peripherals, including VCP and TCP. For more information on these two addressing modes, see the Enhanced Direct Memory Access 3 (EDMA3) for KeyStone Devices User's Guide.

For the range of memory addresses that include EDMA3 channel controller (EDMA3_CC) control registers and EDMA3 transfer controller (TC) control register, see Table 6-63. For memory offsets and other details on EDMA3_CC and TC control registers entries, see the Enhanced Direct Memory Access 3 (EDMA3) for KeyStone Devices User's Guide.

6.8.2 EDMA3 Channel Controller Configuration

Table 6-23 provides the configuration of the EDMA3 channel controller present on the device.

Table 6-23. EDMA3 Channel Controller Configuration

DESCRIPTION	EDMA3_CC
Number of DMA channels in Channel Controller	64
Number of QDMA channels	8
Number of interrupt channels	64
Number of PaRAM set entries	512
Number of event queues	4
Number of Transfer Controllers	4
Memory Protection Existence	Yes
Number of Memory Protection and Shadow Regions	8

6.8.3 EDMA3 Transfer Controller Configuration

Each transfer controller on a device is designed differently based on considerations like performance requirements, system topology (like main TeraNet bus width, external memory bus width), and so on. The parameters that determine the transfer controller configurations are:

- **FIFOSIZE:** Determines the size in bytes for the data FIFO that is the temporary buffer for the in-flight data. The data FIFO is where the read return data read by the TC read controller from the source endpoint is stored and subsequently written out to the destination endpoint by the TC write controller.
- **BUSWIDTH:** The width of the read and write data buses, in bytes, for the TC read and write controller, respectively. This is typically equal to the bus width of the main TeraNet interface.
- **Default Burst Size (DBS):** The DBS is the maximum number of bytes per read/write command issued by a transfer controller.
- **DSTREGDEPTH:** This determines the number of destination FIFO register set. The number of destination FIFO register set for a transfer controller determines the maximum number of outstanding transfer requests.

All four parameters listed above are specified by the design of the device.

Copyright © 2012–2016, Texas Instruments Incorporated

Table 6-24 provides the configuration of the EDMA3 transfer controller present on the device.

Table 6-24. EDMA3 Transfer Controller Configuration

PARAMETER	EDMA3 CC			
	TC0	TC1	TC2	TC3
FIFOSIZE	1024 bytes	512 bytes	512 bytes	1024 bytes
BUSWIDTH	16 bytes	16 bytes	16 bytes	16 bytes
DSTREGDEPTH	4 entries	4 entries	4 entries	4 entries
DBS	64 bytes	64 bytes	64 bytes	64 bytes

6.8.4 EDMA3 Channel Synchronization Events

The EDMA3 supports up to 64 DMA channels for EDMA3_CC that can be used to service system peripherals and to move data between system memories. DMA channels can be triggered by synchronization events generated by system peripherals. Table 6-25 lists the source of the synchronization event associated with each of the EDMA3_CC DMA channels. On the C665x, the association of each synchronization event and DMA channel is fixed and cannot be reprogrammed.

For more detailed information on the EDMA3 module and how EDMA3 events are enabled, captured, processed, prioritized, linked, chained, and cleared, and so forth, see the Enhanced Direct Memory Access 3 (EDMA3) for KeyStone Devices User's Guide.

Table 6-25. EDMA3_CC Events for C665x

EVENT NUMBER	EVENT	EVENT DESCRIPTION
0	TCP3D_AREVT0	TCP3D_A receive event0
1	TCP3D_AREVT1	TCP3D_A receive event1
2	TINT2L	Timer2 interrupt low
3	TINT2H	Timer2 interrupt high
4	URXEVT	UART0 receive event
5	UTXEVT	UART0 transmit event
6	GPINT0	GPIO interrupt
7	GPINT1	GPIO interrupt
8	GPINT2	GPIO Interrupt
9	GPINT3	GPIO interrupt
10	VCPAREVT	VCP2_A receive event
11	VCPAXEVT	VCP2_A transmit event
12	VCPBREVT	VCP2_B receive event
13	VCPBXEVT	VCP2_B transmit event
14	URXEVT_B	UART1 receive event
15	UTXEVT_B	UART1 transmit event
16	SPIINT0	SPI interrupt
17	SPIINT1	SPI interrupt
18	SEMINT0	Semaphore interrupt
19	SEMINT1	Semaphore interrupt
20	SEMINT2	Semaphore interrupt
21	SEMINT3	Semaphore interrupt
22	TINT4L	Timer4 interrupt low
23	TINT4H	Timer4 interrupt high
24	TINT5L	Timer5 interrupt low

Copyright © 2012–2016, Texas Instruments Incorporated

Table 6-25. EDMA3_CC Events for C665x (continued)

EVENT NUMBER	EVENT	EVENT DESCRIPTION
25	TINT5H	Timer5 interrupt high
26	TINT6L	Timer6 interrupt low
27	TINT6H	Timer6 interrupt high
28	TINT7L	Timer7 interrupt low
29	TINT7H	Timer7 interrupt high
30	SPIXEVT	SPI transmit event
31	SPIREVT	SPI receive event
32	I2CREVET	I2C receive event
33	I2CXEVT	I2C transmit event
34	TINT3L	Timer3 interrupt low
35	TINT3H	Timer3 interrupt high
36	MCBSP0_REVT	McBSP_0 receive event
37	MCBSP0_XEVT	McBSP_0 transmit event
38	MCBSP1_REVT	McBSP_1 receive event
39	MCBSP1_XEVT	McBSP_1 transmit event
40	TETBHFULLINT	TETB half full interrupt
41	TETBHFULLINT0	TETB half full interrupt
42	TETBHFULLINT1	TETB half full interrupt
43	CIC1_OUT0	Interrupt Controller output
44	CIC1_OUT1	Interrupt Controller output
45	CIC1_OUT2	Interrupt Controller output
46	CIC1_OUT3	Interrupt Controller output
47	CIC1_OUT4	Interrupt Controller output
48	CIC1_OUT5	Interrupt Controller output
49	CIC1_OUT6	Interrupt Controller output
50	CIC1_OUT7	Interrupt Controller output
51	CIC1_OUT8	Interrupt Controller output
52	CIC1_OUT9	Interrupt Controller output
53	CIC1_OUT10	Interrupt Controller output
54	CIC1_OUT11	Interrupt Controller output
55	CIC1_OUT12	Interrupt Controller output
56	CIC1_OUT13	Interrupt Controller output
57	CIC1_OUT14	Interrupt Controller output
58	CIC1_OUT15	Interrupt Controller output
59	CIC1_OUT16	Interrupt Controller output
60	CIC1_OUT17	Interrupt Controller output
61	TETBFULLINT	TETB full interrupt
62	TETBFULLINT0	TETB full interrupt
63	TETBFULLINT1	TETB full interrupt

Copyright © 2012–2016, Texas Instruments Incorporated

6.9 Interrupts

6.9.1 Interrupt Sources and Interrupt Controller

The CPU interrupts on the C665x device are configured through the C66x CorePac Interrupt Controller. The interrupt controller allows for up to 128 system events to be programmed to any of the 12 CPU interrupt inputs (CPUINT4–CPUINT15), the CPU exception input (EXCEP), or the advanced emulation logic. The 128 system events consist of both internally-generated events (within the CorePac) and chip-level events.

Additional system events are routed to each of the C66x CorePacs to provide chip-level events that are not required as CPU interrupts/exceptions to be routed to the interrupt controller as emulation events. In addition, error-class events or infrequently used events are also routed through the system event router to offload the C66x CorePac interrupt selector. This is accomplished through CIC blocks, CIC[2:0]. This is clocked using CPU/6.

The event controllers consist of simple combination logic to provide additional events to the C66x CorePacs, plus the EDMA3_CC and CIC0 provide 12 additional events as well as 8 broadcast events to the C66x CorePacs. CIC1 provides 18 additional events to EDMA3_CC, and CIC2 provides 32 additional events to HyperLink.

There are numerous events on the chip-level. The chip-level CIC provides a flexible way to combine and remap those events. Multiple events can be combined to a single event through chip-level CIC. However, an event can be mapped only to a single event output from the chip-level CIC. The chip-level CIC also allows the software to trigger system events through memory writes. The broadcast events to C66x CorePacs can be used for synchronization among multiple cores, interprocessor communication purposes, and so forth. For more details on the CIC features, see the Chip Interrupt Controller (CIC) for KeyStone Devices User's Guide.

NOTE

Modules such as MPU, Tracer, and BOOT_CFG have level interrupts and an EOI handshaking interface. The EOI value is 0 for MPU, Tracer, and BOOT_CFG.

Figure 6-18 shows the C665x interrupt topology.

Copyright © 2012–2016, Texas Instruments Incorporated

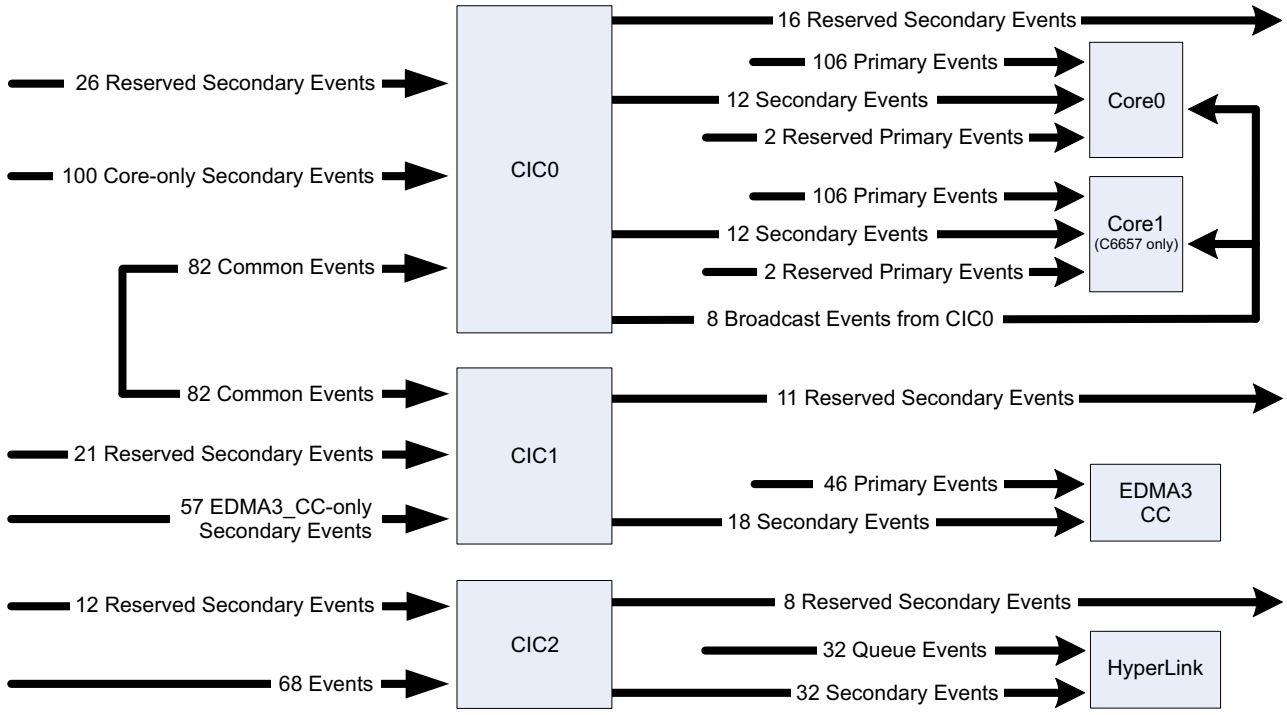

Figure 6-18. C665x Interrupt Topology

Table 6-26 shows the mapping of system events. For more information on the Interrupt Controller, see the C66x CorePac User's Guide.

Table 6-26. C665x System Event Inputs — C66x CorePac Primary Interrupts

INPUT EVENT NUMBER	INTERRUPT EVENT	DESCRIPTION
0	EVT0	Event combiner 0 output
1	EVT1	Event combiner 1 output
2	EVT2	Event combiner 2 output
3	EVT3	Event combiner 3 output
4	TETBHFULLINTn(1)	TETB is half full
5	TETBFULLINTn (1)	TETB is full
6	TETBACQINTn(1)	Acquisition has been completed
7	TETBOVFLINTn(1)	Overflow condition interrupt
8	TETBUNFLINTn(1)	Underflow condition interrupt
9	EMU_DTDMA	ECM interrupt for: • 1. Host scan access • 2. DTDMA transfer complete • 3. AET interrupt
10	MSMC_mpf_errorn(2)	Memory protection fault indicators for local core
11	EMU_RTDXRX	RTDX receive complete
12	EMU_RTDXTX	RTDX transmit complete
13	IDMA0	IDMA channel 0 interrupt
14	IDMA1	IDMA channel 1 interrupt
15	SEMERRn(3)	Semaphore error interrupt
16	SEMINTn(3)	Semaphore interrupt
17	PCIExpress_MSI_INTn(4)	Message signaled interrupt mode
18	PCIExpress_MSI_INTn+4(4)	Message signaled interrupt mode
19	MACINTn(5)	EMAC interrupt
20	INTDST(n+16)(6)	SRIO Interrupt
21	INTDST(n+20)(7)	SRIO Interrupt
22	CIC0_OUT(0+20*n)(8)	Interrupt Controller Output
23	CIC0_OUT(1+20*n)(8)	Interrupt Controller Output
24	CIC0_OUT(2+20*n)(8)	Interrupt Controller Output
25	CIC0_OUT(3+20*n)(8)	Interrupt Controller Output
26	CIC0_OUT(4+20*n)(8)	Interrupt Controller Output
27	CIC0_OUT(5+20*n)(8)	Interrupt Controller Output
28	CIC0_OUT(6+20*n)(8)	Interrupt Controller Output
29	CIC0_OUT(7+20*n)(8)	Interrupt Controller Output
30	CIC0_OUT(8+20*n)(8)	Interrupt Controller Output
31	CIC0_OUT(9+20*n)(8)	Interrupt Controller Output
32	QM_INT_LOW_0	QM Interrupt for 0~31 Queues
33	QM_INT_LOW_1	QM Interrupt for 32~63 Queues
34	QM_INT_LOW_2	QM Interrupt for 64~95 Queues
35	QM_INT_LOW_3	QM Interrupt for 96~127 Queues

(1) CorePac[n] will receive TETBHFULLINTn, TETBFULLINTn, TETBACQINTn, TETBOVFLINTn, and TETBUNFLINTn.
(2) CorePac[n] will receive MSMC_mpf_errorn.
(3) CorePac[n] will receive SEMINTn and SEMERRn.
(4) CorePac[n] will receive PCIEXpress_MSI_INTn.
(5) CorePac[n] will receive MACINTn/MACRXINTn/MACTXINTn/MACTRESHn.
(6) CorePac[n] will receive INTDST(n+16).
(7) CorePac[n] will receive INTDST(n+20).
(8) n is core number.

Copyright © 2012–2016, Texas Instruments Incorporated

Table 6-26. C665x System Event Inputs — C66x CorePac Primary Interrupts (continued)

INPUT EVENT NUMBER	INTERRUPT EVENT	DESCRIPTION
36	QM_INT_LOW_4	QM Interrupt for 128~159 Queues
37	QM_INT_LOW_5	QM Interrupt for 160~191 Queues
38	QM_INT_LOW_6	QM Interrupt for 192~223 Queues
39	QM_INT_LOW_7	QM Interrupt for 224~255 Queues
40	QM_INT_LOW_8	QM Interrupt for 256~287 Queues
41	QM_INT_LOW_9	QM Interrupt for 288~319 Queues
42	QM_INT_LOW_10	QM Interrupt for 320~351 Queues
43	QM_INT_LOW_11	QM Interrupt for 352~383 Queues
44	QM_INT_LOW_12	QM Interrupt for 384~415 Queues
45	QM_INT_LOW_13	QM Interrupt for 416~447 Queues
46	QM_INT_LOW_14	QM Interrupt for 448~479 Queues
47	QM_INT_LOW_15	QM Interrupt for 480~511 Queues
48	QM_INT_HIGH_n(8)	QM Interrupt for Queue 704+n(8)
49	QM_INT_HIGH_(n+4)(8)	QM Interrupt for Queue 708+n(8)
50	QM_INT_HIGH_(n+8)(8)	QM Interrupt for Queue 712+n(8)
51	QM_INT_HIGH_(n+12)(8)	QM Interrupt for Queue 716+n(8)
52	QM_INT_HIGH_(n+16)(8)	QM Interrupt for Queue 720+n(8)
53	QM_INT_HIGH_(n+20)(8)	QM Interrupt for Queue 724+n(8)
54	QM_INT_HIGH_(n+24)(8)	QM Interrupt for Queue 728+n(8)
55	QM_INT_HIGH_(n+28)(8)	QM Interrupt for Queue 732+n(8)
56	CIC0_OUT40	Interrupt Controller Output
57	CIC0_OUT41	Interrupt Controller Output
58	CIC0_OUT42	Interrupt Controller Output
59	CIC0_OUT43	Interrupt Controller Output
60	CIC0_OUT44	Interrupt Controller Output
61	CIC0_OUT45	Interrupt Controller Output
62	CIC0_OUT46	Interrupt Controller Output
63	CIC0_OUT47	Interrupt Controller Output
64	TINTLn(9)	Local timer interrupt low
65	TINTHn(9)	Local timer interrupt high
66	TINT2L	Timer2 interrupt low
67	TINT2H	Timer2 interrupt high
68	TINT3L	Timer3 interrupt low
69	TINT3H	Timer3 interrupt high
70	PCIExpress_MSI_INTn+2(4)	Message signaled interrupt mode
71	PCIExpress_MSI_INTn+6(4)	Message signaled interrupt mode
72	GPINT2	GPIO interrupt
73	GPINT3	GPIO interrupt
74	MACINTn+2(5)	EMAC interrupt
75	MACTXINTn+2(5)	EMAC interrupt
76	MACTRESHn+2(5)	EMAC interrupt
77	MACRXINTn+2(5)	EMAC interrupt
78	GPINT4	GPIO interrupt
79	GPINT5	GPIO interrupt
80	GPINT6	GPIO interrupt
81	GPINT7	GPIO interrupt

(9) CorePac[n] will receive TINTLn and TINTHn.

Copyright © 2012–2016, Texas Instruments Incorporated

Table 6-26. C665x System Event Inputs — C66x CorePac Primary Interrupts (continued)

INPUT EVENT NUMBER	INTERRUPT EVENT	DESCRIPTION
82	GPINT8	GPIO interrupt
83	GPINT9	GPIO interrupt
84	GPINT10	GPIO interrupt
85	GPINT11	GPIO interrupt
86	GPINT12	GPIO interrupt
87	GPINT13	GPIO interrupt
88	GPINT14	GPIO interrupt
89	GPINT15	GPIO interrupt
90	IPC_LOCAL	Inter DSP interrupt from IPCGRn
91	GPINTn(10)	Local GPIO interrupt
92	CIC0_OUT(10+20*n)(8)	Interrupt Controller Output
93	CIC0_OUT(11+20*n)(8)	Interrupt Controller Output
94	MACTXINTn(5)	EMAC interrupt
95	MACTRESHn(5)	EMAC interrupt
96	INTERR	Dropped CPU interrupt event
97	EMC_IDMAERR	Invalid IDMA parameters
98	Reserved	
99	MACRXINTn(5)	EMAC interrupt
100	EFIINTA	EFI Interrupt from side A
101	EFIINTB	EFI Interrupt from side B
102	QM_INT_HIGH_(n+2)(8)	QM Interrupt for Queue 706+n(8)
103	QM_INT_HIGH_(n+6)(8)	QM Interrupt for Queue 710+n(8)
104	QM_INT_HIGH_(n+10)(8)	QM Interrupt for Queue 714+n(8)
105	QM_INT_HIGH_(n+14)(8)	QM Interrupt for Queue 718+n(8)
106	QM_INT_HIGH_(n+18)(8)	QM Interrupt for Queue 722+n(8)
107	QM_INT_HIGH_(n+22)(8)	QM Interrupt for Queue 726+n(8)
108	QM_INT_HIGH_(n+26)(8)	QM Interrupt for Queue 730+n(8)
109	QM_INT_HIGH_(n+30)(8)	QM Interrupt for Queue 734+n(8)
110	MDMAERREVT	VbusM error event
111	Reserved	
112	INTDST(n+18)(11)	SRIO Interrupt
113	PMC_ED	Single bit error detected during DMA read
114	INTDST(n+22)(12)	SRIO Interrupt
115	EDMA3_CC_AETEVT	EDMA3 CC AET Event
116	UMC_ED1	Corrected bit error detected
117	UMC_ED2	Uncorrected bit error detected
118	PDC_INT	Power down sleep interrupt
119	SYS_CMPA	SYS CPU memory protection fault event
120	PMC_CMPA	PMC CPU memory protection fault event
121	PMC_DMPA	PMC DMA memory protection fault event
122	DMC_CMPA	DMC CPU memory protection fault event
123	DMC_DMPA	DMC DMA memory protection fault event
124	UMC_CMPA	UMC CPU memory protection fault event
125	UMC_DMPA	UMC DMA memory protection fault event

(10) CorePac[n] will receive GPINTn.
(11) CorePac[n] will receive INTDST(n+18).
(12) CorePac[n] will receive INTDST(n+22).

Copyright © 2012–2016, Texas Instruments Incorporated

Table 6-26. C665x System Event Inputs — C66x CorePac Primary Interrupts (continued)

INPUT EVENT NUMBER	INTERRUPT EVENT	DESCRIPTION
126	EMC_CMPA	EMC CPU memory protection fault event
127	EMC_BUSERR	EMC bus error interrupt

Table 6-27. CIC0 Event Inputs (Secondary Interrupts for C66x CorePacs)

INPUT EVENT NO. ON CIC	SYSTEM INTERRUPT	DESCRIPTION
0	GPINT16	GPIO interrupt
1	GPINT17	GPIO interrupt
2	GPINT18	GPIO interrupt
3	GPINT19	GPIO interrupt
4	GPINT20	GPIO interrupt
5	GPINT21	GPIO interrupt
6	GPINT22	GPIO interrupt
7	GPINT23	GPIO interrupt
8	GPINT24	GPIO interrupt
9	GPINT25	GPIO interrupt
10	GPINT26	GPIO interrupt
11	GPINT27	GPIO interrupt
12	GPINT28	GPIO interrupt
13	GPINT29	GPIO interrupt
14	GPINT30	GPIO interrupt
15	GPINT31	GPIO interrupt
16	EDMA3_CC_ERRINT	EDMA3_CC error interrupt
17	EDMA3_CC_MPINT	EDMA3_CC memory protection interrupt
18	EDMA3_TC_ERRINT0	EDMA3_CC TC0 error interrupt
19	EDMA3_TC_ERRINT1	EDMA3_CC TC1 error interrupt
20	EDMA3_TC_ERRINT2	EDMA3_CC TC2 error interrupt
21	EDMA3_TC_ERRINT3	EDMA3_CC TC3 error interrupt
22	EDMA3_CC_GINT	EDMA3_CC GINT
23	Reserved	
24	EDMA3_CC_INT0	EDMA3_CC individual completion interrupt
25	EDMA3_CC_INT1	EDMA3_CC individual completion interrupt
26	EDMA3_CC_INT2	EDMA3_CC individual completion interrupt
27	EDMA3_CC_INT3	EDMA3_CC individual completion interrupt
28	EDMA3_CC_INT4	EDMA3_CC individual completion interrupt
29	EDMA3_CC_INT5	EDMA3_CC individual completion interrupt
30	EDMA3_CC_INT6	EDMA3_CC individual completion interrupt
31	EDMA3_CC_INT7	EDMA3_CC individual completion interrupt
32	MCBSP0_RINT	McBSP0 interrupt
33	MCBSP0_XINT	McBSP0 interrupt
34	MCBSP0_REVT	McBSP0 interrupt
35	MCBSP0_XEVT	McBSP0 interrupt
36	MCBSP1_RINT	McBSP1 interrupt
37	MCBSP1_XINT	McBSP1 interrupt
38	MCBSP1_REVT	McBSP1 interrupt
39	MCBSP1_XEVT	McBSP1 interrupt
40	UARTINT_B	UART_1 interrupt
41	URXEVT_B	UART_1 interrupt
42	UTXEVT_B	UART_1 interrupt
43	Reserved	
44	Reserved	
45	Reserved	

Copyright © 2012–2016, Texas Instruments Incorporated

Table 6-27. CIC0 Event Inputs (Secondary Interrupts for C66x CorePacs) (continued)

INPUT EVENT NO. ON CIC	SYSTEM INTERRUPT	DESCRIPTION
46	Reserved	
47	Reserved	
48	PCIEXpress_ERR_INT	Protocol error interrupt
49	PCIEXpress_PM_INT	Power management interrupt
50	PCIEXpress_Legacy_INTA	Legacy interrupt mode
51	PCIEXpress_Legacy_INTB	Legacy interrupt mode
52	PCIEXpress_Legacy_CIC	Legacy interrupt mode
53	PCIEXpress_Legacy_INTD	Legacy interrupt mode
54	SPIINT0	SPI interrupt0
55	SPIINT1	SPI interrupt1
56	SPIXEVT	Transmit event
57	SPIREVT	Receive event
58	I2CINT	I^2C interrupt
59	I2CREVT	I^2C receive event
60	I2CXEVT	I^2C transmit event
61	Reserved	
62	Reserved	
63	TETBHFULLINT	TETB is half full
64	TETBFULLINT	TETB is full
65	TETBACQINT	Acquisition has been completed
66	TETBOVFLINT	Overflow condition occur
67	TETBUNFLINT	Underflow condition occur
68	SEMINT2	Semaphore interrupt
69	SEMINT3	Semaphore interrupt
70	SEMERR2	Semaphore interrupt
71	SEMERR3	Semaphore interrupt
72	Reserved	
73	Tracer_core_0_INTD	Tracer sliding time window interrupt for individual core
74	Tracer_core_1_INTD	Tracer sliding time window interrupt for individual core (C6657 only)
75	Reserved	
76	Reserved	
77	Tracer_DDR_INTD	Tracer sliding time window interrupt for DDR3 EMIF1
78	Tracer_MSMC_0_INTD	Tracer sliding time window interrupt for MSMC SRAM bank0
79	Tracer_MSMC_1_INTD	Tracer sliding time window interrupt for MSMC SRAM bank1
80	Tracer_MSMC_2_INTD	Tracer sliding time window interrupt for MSMC SRAM bank2
81	Tracer_MSMC_3_INTD	Tracer sliding time window interrupt for MSMC SRAM bank3
81	Tracer_CFG_INTD	Tracer sliding time window interrupt for CFG0 TeraNet
82	Tracer_QM_CFG_INTD	Tracer sliding time window interrupt for QM_SS CFG
84	Tracer_QM_DMA_INTD	Tracer sliding time window interrupt for QM_SS slave
85	Tracer_SM_INTD	Tracer sliding time window interrupt for semaphore
86	PSC_ALLINT	Power/sleep controller interrupt
87	MSMC_scrub_cerror	Correctable (1-bit) soft error detected during scrub cycle
88	BOOTCFG_INTD	Chip-level MMR error register
89	po_vcon_smpserr_intr	SmartReflex VolCon error status
90	MPU0_INTD (MPU0_ADDR_ERR_INT and MPU0_PROT_ERR_INT combined)	MPU0 addressing violation interrupt and protection violation interrupt.

Copyright © 2012–2016, Texas Instruments Incorporated

Table 6-27. CIC0 Event Inputs (Secondary Interrupts for C66x CorePacs) (continued)

INPUT EVENT NO. ON CIC	SYSTEM INTERRUPT	DESCRIPTION
91	Reserved	
92	MPU1_INTD (MPU1_ADDR_ERR_INT and MPU1_PROT_ERR_INT combined)	MPU1 addressing violation interrupt and protection violation interrupt.
93	Reserved	
94	MPU2_INTD (MPU2_ADDR_ERR_INT and MPU2_PROT_ERR_INT combined)	MPU2 addressing violation interrupt and protection violation interrupt.
95	Reserved	
96	MPU3_INTD (MPU3_ADDR_ERR_INT and MPU3_PROT_ERR_INT combined)	MPU3 addressing violation interrupt and protection violation interrupt.
97	Reserved	
98	MSMC_dedc_cerror	Correctable (1-bit) soft error detected on SRAM read
99	MSMC_dedc_nc_error	Noncorrectable (2-bit) soft error detected on SRAM read
100	MSMC_scrub_nc_error	Noncorrectable (2-bit) soft error detected during scrub cycle
101	Reserved	
102	MSMC_mpf_error8	Memory protection fault indicators for each system master PrivID
103	MSMC_mpf_error9	Memory protection fault indicators for each system master PrivID
104	MSMC_mpf_error10	Memory protection fault indicators for each system master PrivID
105	MSMC_mpf_error11	Memory protection fault indicators for each system master PrivID
105	MSMC_mpf_error12	Memory protection fault indicators for each system master PrivID
107	MSMC_mpf_error13	Memory protection fault indicators for each system master PrivID
108	MSMC_mpf_error14	Memory protection fault indicators for each system master PrivID
109	MSMC_mpf_error15	Memory protection fault indicators for each system master PrivID
110	DDR3_ERR	DDR3 EMIF error interrupt
111	HyperLink_int_o	HyperLink interrupt
112	INTDST0	RapidIO interrupt
113	INTDST1	RapidIO interrupt
114	INTDST2	RapidIO interrupt
115	INTDST3	RapidIO interrupt
116	INTDST4	RapidIO interrupt
117	INTDST5	RapidIO interrupt
118	INTDST6	RapidIO interrupt
119	INTDST7	RapidIO interrupt
120	INTDST8	RapidIO interrupt
121	INTDST9	RapidIO interrupt
122	INTDST10	RapidIO interrupt
123	INTDST11	RapidIO interrupt
124	INTDST12	RapidIO interrupt
125	INTDST13	RapidIO interrupt
126	INTDST14	RapidIO interrupt
127	INTDST15	RapidIO interrupt
128	Reserved	
129	Reserved	
130	po_vp_smpsack_intr	Indicating that Volt_Proc receives the r-edge at its smpsack input
131	Reserved	
132	Reserved	

Copyright © 2012–2016, Texas Instruments Incorporated

Table 6-27. CIC0 Event Inputs (Secondary Interrupts for C66x CorePacs) (continued)

INPUT EVENT NO. ON CIC	SYSTEM INTERRUPT	DESCRIPTION
133	Reserved	
134	QM_INT_PASS_TXQ_PEND_662	Queue manager pend event
135	QM_INT_PASS_TXQ_PEND_663	Queue manager pend event
136	QM_INT_PASS_TXQ_PEND_664	Queue manager pend event
137	QM_INT_PASS_TXQ_PEND_665	Queue manager pend event
138	QM_INT_PASS_TXQ_PEND_666	Queue manager pend event
139	QM_INT_PASS_TXQ_PEND_667	Queue manager pend event
140	QM_INT_PASS_TXQ_PEND_668	Queue manager pend event
141	QM_INT_PASS_TXQ_PEND_669	Queue manager pend event
142	QM_INT_PASS_TXQ_PEND_670	Queue manager pend event
143	VCP0INT	VCP2_0 interrupt
144	VCP1INT	VCP2_1 interrupt
145	TINT4L	Timer4 interrupt low
146	TINT4H	Timer4 interrupt high
147	VCPAREVT	VCP2_A receive event
148	VCPAXEVT	VCP2_A transmit event
149	VCPBREVT	VCP2_B receive event
150	VCPBXEVT	VCP2_B transmit event
151	TINT5L	Timer5 interrupt low
152	TINT5H	Timer5 interrupt high
153	TINT6L	Timer6 interrupt low
154	TINT6H	Timer6 interrupt high
155	TCP_INTD	TCP3d interrupt
156	UPPINT	uPP interrupt
157	TCP_REVT0	TCP3d interrupt
158	TCP_XEVT0	TCP3d interrupt
159	Reserved	
160	MSMC_mpf_error2	Memory protection fault indicators for each system master PrivID
161	MSMC_mpf_error3	Memory protection fault indicators for each system master PrivID
162	TINT7L	Timer7 interrupt low
163	TINT7H	Timer7interrupt high
164	UARTINT_A	UART_0 interrupt
165	URXEVT_A	UART_0 interrupt
166	UTXEVT_A	UART_0 interrupt
167	EASYNCERR	EMIF16 error interrupt
168	Tracer_EMIF16	Tracer sliding time window interrupt for EMIF16
169	Reserved	
170	MSMC_mpf_error4	Memory protection fault indicators for each system master PrivID
171	MSMC_mpf_error5	Memory protection fault indicators for each system master PrivID
172	MSMC_mpf_error6	Memory protection fault indicators for each system master PrivID
173	MSMC_mpf_error7	Memory protection fault indicators for each system master PrivID
174	MPU4_INTD (MPU4_ADDR_ERR_INT and MPU4_PROT_ERR_INT combined)	MPU4 addressing violation interrupt and protection violation interrupt.
175	QM_INT_PASS_TXQ_PEND_671	Queue manager pend event
176	QM_INT_PKTDMA_0	QM interrupt for CDMA starvation
177	QM_INT_PKTDMA_1	QM interrupt for CDMA starvation

Copyright © 2012–2016, Texas Instruments Incorporated

Table 6-27. CIC0 Event Inputs (Secondary Interrupts for C66x CorePacs) (continued)

INPUT EVENT NO. ON CIC	SYSTEM INTERRUPT	DESCRIPTION
178	SRIO_INT_PKTDMA_0	SRIO interrupt for CDMA starvation
179	Reserved	
180	Reserved	
181	SmartReflex_intrreq0	SmartReflex sensor interrupt
182	SmartReflex_intrreq1	SmartReflex sensor interrupt
183	SmartReflex_intrreq2	SmartReflex sensor interrupt
184	SmartReflex_intrreq3	SmartReflex sensor interrupt
185	VPNoSMPSAck	VPVOLTUPDATE has been asserted but SMPS has not been responded to in a defined time interval
186	VPEqValue	$\overline{\text{SRSINTERUPT}}$ is asserted, but the new voltage is not different from the current SMPS voltage
187	VPMaxVdd	The new voltage required is equal to or greater than MaxVdd.
188	VPMinVdd	The new voltage required is equal to or less than MinVdd.
189	VPINIDLE	Indicating that the FSM of voltage processor is in idle.
190	VPOPPChangeDone	Indicating that the average frequency error is within the desired limit.
191	Reserved	
192	MACINT4	EMAC interrupt
193	MACRXINT4	EMAC interrupt
194	MACTXINT4	EMAC interrupt
195	MACTRESH4	EMAC interrupt
196	MACINT5	EMAC interrupt
197	MACRXINT5	EMAC interrupt
198	MACTXINT5	EMAC interrupt
199	MACTRESH5	EMAC interrupt
200	MACINT6	EMAC interrupt
201	MACRXINT6	EMAC interrupt
202	MACTXINT6	EMAC interrupt
203	MACTRESH6	EMAC interrupt
204	MACINT7	EMAC interrupt
205	MACRXINT7	EMAC interrupt
206	MACTXINT7	EMAC interrupt
207	MACTRESH7	EMAC interrupt

Copyright © 2012–2016, Texas Instruments Incorporated

Table 6-28. CIC1 Event Inputs (Secondary Events for EDMA3_CC)

INPUT EVENT NO. ON CIC	SYSTEM INTERRUPT	DESCRIPTION
0	GPINT8	GPIO interrupt
1	GPINT9	GPIO interrupt
2	GPINT10	GPIO interrupt
3	GPINT11	GPIO interrupt
4	GPINT12	GPIO interrupt
5	GPINT13	GPIO interrupt
6	GPINT14	GPIO interrupt
7	GPINT15	GPIO interrupt
8	Reserved	
9	Reserved	
10	TETBACQINT	System TETB acquisition has been completed
11	Reserved	
12	Reserved	
13	TETBACQINT0	TETB0 acquisition has been completed
14	Reserved	
15	Reserved	
16	TETBACQINT1	TETB1 acquisition has been completed (C6657 only)
17	GPINT16	GPIO interrupt
18	GPINT17	GPIO interrupt
19	GPINT18	GPIO interrupt
20	GPINT19	GPIO interrupt
21	GPINT20	GPIO interrupt
22	GPINT21	GPIO interrupt
23	Reserved	
24	QM_INT_HIGH_16	QM interrupt
25	QM_INT_HIGH_17	QM interrupt
26	QM_INT_HIGH_18	QM interrupt
27	QM_INT_HIGH_19	QM interrupt
28	QM_INT_HIGH_20	QM interrupt
29	QM_INT_HIGH_21	QM interrupt
30	QM_INT_HIGH_22	QM interrupt
31	QM_INT_HIGH_23	QM interrupt
32	QM_INT_HIGH_24	QM interrupt
33	QM_INT_HIGH_25	QM interrupt
34	QM_INT_HIGH_26	QM interrupt
35	QM_INT_HIGH_27	QM interrupt
36	QM_INT_HIGH_28	QM interrupt
37	QM_INT_HIGH_29	QM interrupt
38	QM_INT_HIGH_30	QM interrupt
39	QM_INT_HIGH_31	QM interrupt
40	Reserved	
41	Reserved	
42	Reserved	
43	Reserved	
44	Reserved	
45	Tracer_core_0_INTD	Tracer sliding time window interrupt for individual core

Copyright © 2012–2016, Texas Instruments Incorporated

Table 6-28. CIC1 Event Inputs (Secondary Events for EDMA3_CC) (continued)

INPUT EVENT NO. ON CIC	SYSTEM INTERRUPT	DESCRIPTION
46	Tracer_core_1_INTD	Tracer sliding time window interrupt for individual core (C6657 only)
47	GPINT22	GPIO interrupt
48	GPINT23	GPIO interrupt
49	Tracer_DDR_INTD	Tracer sliding time window interrupt for DDR3 EMIF
50	Tracer_MSMC_0_INTD	Tracer sliding time window interrupt for MSMC SRAM bank0
51	Tracer_MSMC_1_INTD	Tracer sliding time window interrupt for MSMC SRAM bank1
52	Tracer_MSMC_2_INTD	Tracer sliding time window interrupt for MSMC SRAM bank2
53	Tracer_MSMC_3_INTD	Tracer sliding time window interrupt for MSMC SRAM bank3
54	Tracer_CFG_INTD	Tracer sliding time window interrupt for CFG0 TeraNet
55	Tracer_QM_CFG_INTD	Tracer sliding time window interrupt for QM_SS CFG
56	Tracer_QM_DMA_INTD	Tracer sliding time window interrupt for QM_SS slave port
57	Tracer_SEM_INTD	Tracer sliding time window interrupt for semaphore
58	SEMERR0	Semaphore interrupt
59	SEMERR1	Semaphore interrupt
60	SEMERR2	Semaphore interrupt
61	SEMERR3	Semaphore interrupt
62	BOOTCFG_INTD	BOOTCFG interrupt BOOTCFG_ERR and BOOTCFG_PROT
63	UPPINT	uPP interrupt
64	MPU0_INTD (MPU0_ADDR_ERR_INT and MPU0_PROT_ERR_INT combined)	MPU0 addressing violation interrupt and protection violation interrupt.
65	MSMC_scrub_cerror	Correctable (1-bit) soft error detected during scrub cycle
66	MPU1_INTD (MPU1_ADDR_ERR_INT and MPU1_PROT_ERR_INT combined)	MPU1 addressing violation interrupt and protection violation interrupt.
67	RapidIO_INT_PKTDMA_0	RapidIO interrupt for packet DMA starvation
68	MPU2_INTD (MPU2_ADDR_ERR_INT and MPU2_PROT_ERR_INT combined)	MPU2 addressing violation interrupt and protection violation interrupt.
69	QM_INT_PKTDMA_0	QM interrupt for packet DMA starvation
70	MPU3_INTD (MPU3_ADDR_ERR_INT and MPU3_PROT_ERR_INT combined)	MPU3 addressing violation interrupt and protection violation interrupt.
71	QM_INT_PKTDMA_1	QM interrupt for packet DMA starvation
72	MSMC_dedc_cerror	Correctable (1-bit) soft error detected on SRAM read
73	MSMC_dedc_nc_error	Noncorrectable (2-bit) soft error detected on SRAM read
74	MSMC_scrub_nc_error	Noncorrectable (2-bit) soft error detected during scrub cycle
75	Reserved	
76	MSMC_mpf_error0	Memory protection fault indicators for each system master PrivID
77	MSMC_mpf_error1	Memory protection fault indicators for each system master PrivID
78	MSMC_mpf_error2	Memory protection fault indicators for each system master PrivID
79	MSMC_mpf_error3	Memory protection fault indicators for each system master PrivID
80	MSMC_mpf_error4	Memory protection fault indicators for each system master PrivID
81	MSMC_mpf_error5	Memory protection fault indicators for each system master PrivID
82	MSMC_mpf_error6	Memory protection fault indicators for each system master PrivID
83	MSMC_mpf_error7	Memory protection fault indicators for each system master PrivID
84	MSMC_mpf_error8	Memory protection fault indicators for each system master PrivID
85	MSMC_mpf_error9	Memory protection fault indicators for each system master PrivID
86	MSMC_mpf_error10	Memory protection fault indicators for each system master PrivID
87	MSMC_mpf_error11	Memory protection fault indicators for each system master PrivID
88	MSMC_mpf_error12	Memory protection fault indicators for each system master PrivID
89	MSMC_mpf_error13	Memory protection fault indicators for each system master PrivID

Copyright © 2012–2016, Texas Instruments Incorporated

Table 6-28. CIC1 Event Inputs (Secondary Events for EDMA3_CC) (continued)

INPUT EVENT NO. ON CIC	SYSTEM INTERRUPT	DESCRIPTION
90	MSMC_mpf_error14	Memory protection fault indicators for each system master PrivID
91	MSMC_mpf_error15	Memory protection fault indicators for each system master PrivID
92	Reserved	
93	INTDST0	RapidIO interrupt
94	INTDST1	RapidIO interrupt
95	INTDST2	RapidIO interrupt
96	INTDST3	RapidIO interrupt
97	INTDST4	RapidIO interrupt
98	INTDST5	RapidIO interrupt
99	INTDST6	RapidIO interrupt
100	INTDST7	RapidIO interrupt
101	INTDST8	RapidIO interrupt
102	INTDST9	RapidIO interrupt
103	INTDST10	RapidIO interrupt
104	INTDST11	RapidIO interrupt
105	INTDST12	RapidIO interrupt
106	INTDST13	RapidIO interrupt
107	INTDST14	RapidIO interrupt
108	INTDST15	RapidIO interrupt
109	INTDST16	RapidIO interrupt
110	INTDST17	RapidIO interrupt
111	INTDST18	RapidIO interrupt
112	INTDST19	RapidIO interrupt
113	INTDST20	RapidIO interrupt
114	INTDST21	RapidIO interrupt
115	INTDST22	RapidIO interrupt
116	INTDST23	RapidIO interrupt
117	GPINT24	GPIO interrupt
118	GPINT25	GPIO interrupt
119	VCPAINT	VCP2_A interrupt
120	VCPBINT	VCP2_B interrupt
121	GPINT26	GPIO interrupt
122	GPINT27	GPIO interrupt
123	TCP3D_INTD	Error interrupt TCP3DINT0 and TCP3DINT1
124	GPINT28	GPIO interrupt
125	GPINT29	GPIO interrupt
126	GPINT30	GPIO interrupt
127	GPINT31	GPIO interrupt
128	GPINT4	GPIO interrupt
129	GPINT5	GPIO interrupt
130	GPINT6	GPIO interrupt
131	GPINT7	GPIO interrupt
132	Hyperlink_int_o	Hyperlink interrupt
133	Tracer_EMIF16	Tracer sliding time window interrupt for EMIF16
134	EASYNCERR	EMIF16 error interrupt
135	MPU4_INTD (MPU4_ADDR_ERR_INT and MPU4_PROT_ERR_INT combined)	MPU4 addressing violation interrupt and protection violation interrupt.

Copyright © 2012–2016, Texas Instruments Incorporated

Table 6-28. CIC1 Event Inputs (Secondary Events for EDMA3_CC) (continued)

INPUT EVENT NO. ON CIC	SYSTEM INTERRUPT	DESCRIPTION
136	Reserved	
137	QM_INT_HIGH_0	QM interrupt
138	QM_INT_HIGH_1	QM interrupt
139	QM_INT_HIGH_2	QM interrupt
140	QM_INT_HIGH_3	QM interrupt
141	QM_INT_HIGH_4	QM interrupt
142	QM_INT_HIGH_5	QM interrupt
143	QM_INT_HIGH_6	QM interrupt
144	QM_INT_HIGH_7	QM interrupt
145	QM_INT_HIGH_8	QM interrupt
146	QM_INT_HIGH_9	QM interrupt
147	QM_INT_HIGH_10	QM interrupt
148	QM_INT_HIGH_11	QM interrupt
149	QM_INT_HIGH_12	QM interrupt
150	QM_INT_HIGH_13	QM interrupt
151	QM_INT_HIGH_14	QM interrupt
152	QM_INT_HIGH_15	QM interrupt
153	Reserved	
154	Reserved	
155	Reserved	
156	Reserved	
157	Reserved	
158	Reserved	
159	DDR3_ERR	DDR3 error interrupt

Copyright © 2012–2016, Texas Instruments Incorporated

Table 6-29. CIC2 Event Inputs (Secondary Events for HyperLink)

INPUT EVENT NO. ON CIC	SYSTEM INTERRUPT	DESCRIPTION
0	GPINT0	GPIO interrupt
1	GPINT1	GPIO interrupt
2	GPINT2	GPIO interrupt
3	GPINT3	GPIO interrupt
4	GPINT4	GPIO interrupt
5	GPINT5	GPIO interrupt
6	GPINT6	GPIO interrupt
7	GPINT7	GPIO interrupt
8	GPINT8	GPIO interrupt
9	GPINT9	GPIO interrupt
10	GPINT10	GPIO interrupt
11	GPINT11	GPIO interrupt
12	GPINT12	GPIO interrupt
13	GPINT13	GPIO interrupt
14	GPINT14	GPIO interrupt
15	GPINT15	GPIO interrupt
16	TETBHFULLINT	System TETB is half full
17	TETBFULLINT	System TETB is full
18	TETBACQINT	System TETB acquisition has been completed
19	TETBHFULLINT0	TETB0 is half full
20	TETBFULLINT0	TETB0 is full
21	TETBACQINT0	TETB0 acquisition has been completed
22	TETBHFULLINT1	TETB1 is half full
23	TETBFULLINT1	TETB1 is full
24	TETBACQINT1	TETB1 acquisition has been completed
25	GPINT16	GPIO interrupt
26	GPINT17	GPIO interrupt
27	GPINT18	GPIO interrupt
28	GPINT19	GPIO interrupt
29	GPINT20	GPIO interrupt
30	GPINT21	GPIO interrupt
31	Tracer_core_0_INTD	Tracer sliding time window interrupt for individual core
32	Tracer_core_1_INTD	Tracer sliding time window interrupt for individual core (C6657 only)
33	GPINT22	GPIO interrupt
34	GPINT23	GPIO interrupt
35	Tracer_DDR_INTD	Tracer sliding time window interrupt for DDR3 EMIF1
36	Tracer_MSMC_0_INTD	Tracer sliding time window interrupt for MSMC SRAM bank0
37	Tracer_MSMC_1_INTD	Tracer sliding time window interrupt for MSMC SRAM bank1
38	Tracer_MSMC_2_INTD	Tracer sliding time window interrupt for MSMC SRAM bank2
39	Tracer_MSMC_3_INTD	Tracer sliding time window interrupt for MSMC SRAM bank3
40	Tracer_CFG_INTD	Tracer sliding time window interrupt for CFG0 TeraNet
41	Tracer_QM_SS_CFG_INTD	Tracer sliding time window interrupt for QM_SS CFG
42	Tracer_QM_SS_DMA_INTD	Tracer sliding time window interrupt for QM_SS slave port
43	Tracer_SEM_INTD	Tracer sliding time window interrupt for semaphore
44	Reserved	
45	GPINT24	GPIO interrupt

Copyright © 2012–2016, Texas Instruments Incorporated

Table 6-29. CIC2 Event Inputs (Secondary Events for HyperLink) (continued)

INPUT EVENT NO. ON CIC	SYSTEM INTERRUPT	DESCRIPTION
46	GPINT25	GPIO interrupt
47	GPINT26	GPIO interrupt
48	GPINT27	GPIO interrupt
49	TINT4L	Timer64_4 interrupt low
50	TINT4H	Timer64_4 interrupt high
51	TINT5L	Timer64_5 interrupt low
52	TINT5H	timer64_5 interrupt high
53	TINT6L	Timer64_6 interrupt low
54	TINT6H	Timer64_6 interrupt high
55	TINT7L	Timer64_7 interrupt low
56	TINT7H	Timer64_7 interrupt high
57	Reserved	
58	Reserved	
59	Reserved	
60	Tracer_EMIF16	Tracer sliding time window interrupt for TNet_6P_A
61	DDR3_ERR	DDR3 EMIF Error interrupt
62	Reserved	
63	EASYNCERR	EMIF16 error interrupt
64	GPINT28	GPIO interrupt
65	GPINT29	GPIO interrupt
66	GPINT30	GPIO interrupt
67	GPINT31	GPIO interrupt
68	TINT2L	Timer2 interrupt low
69	TINT2H	Timer2 interrupt high
70	TINT3L	Timer2 interrupt low
71	TINT3H	Timer2 interrupt high
72-79	Reserved	

Copyright © 2012–2016, Texas Instruments Incorporated

6.9.2 CIC Registers

This section includes the offsets for CIC registers. The base addresses for interrupt control registers are CIC0 - 0x0260 0000, CIC1 - 0x0260 4000, and CIC2 - 0x0260 8000.

6.9.2.1 CIC0 Register Map

Table 6-30 describes the CIC0 registers.

Table 6-30. CIC0 Register

ADDRESS OFFSET	REGISTER MNEMONIC	REGISTER NAME
0x0	REVISION_REG	Revision Register
0x4	CONTROL_REG	Control Register
0xc	HOST_CONTROL_REG	Host Control Register
0x10	GLOBAL_ENABLE_HINT_REG	Global Host Int Enable Register
0x20	STATUS_SET_INDEX_REG	Status Set Index Register
0x24	STATUS_CLR_INDEX_REG	Status Clear Index Register
0x28	ENABLE_SET_INDEX_REG	Enable Set Index Register
0x2c	ENABLE_CLR_INDEX_REG	Enable Clear Index Register
0x34	HINT_ENABLE_SET_INDEX_REG	Host Int Enable Set Index Register
0x38	HINT_ENABLE_CLR_INDEX_REG	Host Int Enable Clear Index Register
0x200	RAW_STATUS_REG0	Raw Status Register 0
0x204	RAW_STATUS_REG1	Raw Status Register 1
0x208	RAW_STATUS_REG2	Raw Status Register 2
0x20c	RAW_STATUS_REG3	Raw Status Register 3
0x210	RAW_STATUS_REG4	Raw Status Register 4
0x214	RAW_STATUS_REG5	Raw Status Register 5
0x218	RAW_STATUS_REG6	Raw Status Register 6
0x280	ENA_STATUS_REG0	Enabled Status Register 0
0x284	ENA_STATUS_REG1	Enabled Status Register 1
0x288	ENA_STATUS_REG2	Enabled Status Register 2
0x28c	ENA_STATUS_REG3	Enabled Status Register 3
0x290	ENA_STATUS_REG4	Enabled Status Register 4
0x294	ENA_STATUS_REG5	Enabled Status Register 5
0x298	ENA_STATUS_REG6	Enabled Status Register 6
0x300	ENABLE_REG0	Enable Register 0
0x304	ENABLE_REG1	Enable Register 1
0x308	ENABLE_REG2	Enable Register 2
0x30c	ENABLE_REG3	Enable Register 3
0x310	ENABLE_REG4	Enable Register 4
0x314	ENABLE_REG5	Enable Register 5
0x318	ENABLE_REG6	Enable Register 6
0x380	ENABLE_CLR_REG0	Enable Clear Register 0
0x384	ENABLE_CLR_REG1	Enable Clear Register 1
0x388	ENABLE_CLR_REG2	Enable Clear Register 2
0x38c	ENABLE_CLR_REG3	Enable Clear Register 3
0x390	ENABLE_CLR_REG4	Enable Clear Register 4
0x394	ENABLE_CLR_REG5	Enable Clear Register 5
0x398	ENABLE_CLR_REG6	Enable Clear Register 6
0x400	CH_MAP_REG0	Interrupt Channel Map Register for 0 to 0+3

Copyright © 2012–2016, Texas Instruments Incorporated

Table 6-30. CIC0 Register (continued)

ADDRESS OFFSET	REGISTER MNEMONIC	REGISTER NAME
0x404	CH_MAP_REG1	Interrupt Channel Map Register for 4 to 4+3
0x408	CH_MAP_REG2	Interrupt Channel Map Register for 8 to 8+3
0x40c	CH_MAP_REG3	Interrupt Channel Map Register for 12 to 12+3
0x410	CH_MAP_REG4	Interrupt Channel Map Register for 16 to 16+3
0x414	CH_MAP_REG5	Interrupt Channel Map Register for 20 to 20+3
0x418	CH_MAP_REG6	Interrupt Channel Map Register for 24 to 24+3
0x41c	CH_MAP_REG7	Interrupt Channel Map Register for 28 to 28+3
0x420	CH_MAP_REG8	Interrupt Channel Map Register for 32 to 32+3
0x424	CH_MAP_REG9	Interrupt Channel Map Register for 36 to 36+3
0x428	CH_MAP_REG10	Interrupt Channel Map Register for 40 to 40+3
0x42c	CH_MAP_REG11	Interrupt Channel Map Register for 44 to 44+3
0x430	CH_MAP_REG12	Interrupt Channel Map Register for 48 to 48+3
0x434	CH_MAP_REG13	Interrupt Channel Map Register for 52 to 52+3
0x438	CH_MAP_REG14	Interrupt Channel Map Register for 56 to 56+3
0x43c	CH_MAP_REG15	Interrupt Channel Map Register for 60 to 60+3
0x440	CH_MAP_REG16	Interrupt Channel Map Register for 64 to 64+3
0x444	CH_MAP_REG17	Interrupt Channel Map Register for 68 to 68+3
0x448	CH_MAP_REG18	Interrupt Channel Map Register for 72 to 72+3
0x44c	CH_MAP_REG19	Interrupt Channel Map Register for 76 to 76+3
0x450	CH_MAP_REG20	Interrupt Channel Map Register for 80 to 80+3
0x454	CH_MAP_REG21	Interrupt Channel Map Register for 84 to 84+3
0x458	CH_MAP_REG22	Interrupt Channel Map Register for 88 to 88+3
0x45c	CH_MAP_REG23	Interrupt Channel Map Register for 92 to 92+3
0x460	CH_MAP_REG24	Interrupt Channel Map Register for 96 to 96+3
0x464	CH_MAP_REG25	Interrupt Channel Map Register for 100 to 100+3
0x468	CH_MAP_REG26	Interrupt Channel Map Register for 104 to 104+3
0x46c	CH_MAP_REG27	Interrupt Channel Map Register for 108 to 108+3
0x470	CH_MAP_REG28	Interrupt Channel Map Register for 112 to 112+3
0x474	CH_MAP_REG29	Interrupt Channel Map Register for 116 to 116+3
0x478	CH_MAP_REG30	Interrupt Channel Map Register for 120 to 120+3
0x47c	CH_MAP_REG31	Interrupt Channel Map Register for 124 to 124+3
0x480	CH_MAP_REG32	Interrupt Channel Map Register for 128 to 128+3
0x484	CH_MAP_REG33	Interrupt Channel Map Register for 132 to 132+3
0x488	CH_MAP_REG34	Interrupt Channel Map Register for 136 to 136+3
0x48c	CH_MAP_REG35	Interrupt Channel Map Register for 140 to 140+3
0x490	CH_MAP_REG36	Interrupt Channel Map Register for 144 to 144+3
0x494	CH_MAP_REG37	Interrupt Channel Map Register for 148 to 148+3
0x498	CH_MAP_REG38	Interrupt Channel Map Register for 152 to 152+3
0x49c	CH_MAP_REG39	Interrupt Channel Map Register for 156 to 156+3
0x4a0	CH_MAP_REG40	Interrupt Channel Map Register for 160 to 160+3
0x4a4	CH_MAP_REG41	Interrupt Channel Map Register for 164 to 164+3
0x4a8	CH_MAP_REG42	Interrupt Channel Map Register for 168 to 168+3
0x4ac	CH_MAP_REG43	Interrupt Channel Map Register for 172 to 172+3
0x4b0	CH_MAP_REG44	Interrupt Channel Map Register for 176 to 176+3
0x4b4	CH_MAP_REG45	Interrupt Channel Map Register for 180 to 180+3
0x4b8	CH_MAP_REG46	Interrupt Channel Map Register for 184 to 184+3
0x4bc	CH_MAP_REG47	Interrupt Channel Map Register for 188 to 188+3

Copyright © 2012–2016, Texas Instruments Incorporated

Table 6-30. CIC0 Register (continued)

ADDRESS OFFSET	REGISTER MNEMONIC	REGISTER NAME
0x4c0	CH_MAP_REG48	Interrupt Channel Map Register for 192 to 192+3
0x4c4	CH_MAP_REG49	Interrupt Channel Map Register for 196 to 196+3
0x4c8	CH_MAP_REG50	Interrupt Channel Map Register for 200 to 200+3
0x4cc	CH_MAP_REG51	Interrupt Channel Map Register for 204 to 204+3
0x800	HINT_MAP_REG0	Host Interrupt Map Register for 0 to 0+3
0x804	HINT_MAP_REG1	Host Interrupt Map Register for 4 to 4+3
0x808	HINT_MAP_REG2	Host Interrupt Map Register for 8 to 8+3
0x80c	HINT_MAP_REG3	Host Interrupt Map Register for 12 to 12+3
0x810	HINT_MAP_REG4	Host Interrupt Map Register for 16 to 16+3
0x814	HINT_MAP_REG5	Host Interrupt Map Register for 20 to 20+3
0x818	HINT_MAP_REG6	Host Interrupt Map Register for 24 to 24+3
0x81c	HINT_MAP_REG7	Host Interrupt Map Register for 28 to 28+3
0x820	HINT_MAP_REG8	Host Interrupt Map Register for 32 to 32+3
0x824	HINT_MAP_REG9	Host Interrupt Map Register for 36 to 36+3
0x828	HINT_MAP_REG10	Host Interrupt Map Register for 40 to 40+3
0x82c	HINT_MAP_REG11	Host Interrupt Map Register for 44 to 44+3
0x830	HINT_MAP_REG12	Host Interrupt Map Register for 48 to 48+3
0x834	HINT_MAP_REG13	Host Interrupt Map Register for 52 to 52+3
0x838	HINT_MAP_REG14	Host Interrupt Map Register for 56 to 56+3
0x83c	HINT_MAP_REG15	Host Interrupt Map Register for 60 to 60+3
0x840	HINT_MAP_REG16	Host Interrupt Map Register for 64 to 64+3
0x844	HINT_MAP_REG17	Host Interrupt Map Register for 68 to 68+3
0x848	HINT_MAP_REG18	Host Interrupt Map Register for 72 to 72+3
0x84c	HINT_MAP_REG19	Host Interrupt Map Register for 76 to 76+3
0x850	HINT_MAP_REG20	Host Interrupt Map Register for 80 to 80+3
0x854	HINT_MAP_REG21	Host Interrupt Map Register for 84 to 84+3
0x858	HINT_MAP_REG22	Host Interrupt Map Register for 88 to 88+3
0x860	HINT_MAP_REG23	Host Interrupt Map Register for 92 to 92+3
0x1500	ENABLE_HINT_REG0	Host Int Enable Register 0
0x1504	ENABLE_HINT_REG1	Host Int Enable Register 1
0x1508	ENABLE_HINT_REG2	Host Int Enable Register 2

Copyright © 2012–2016, Texas Instruments Incorporated

6.9.2.2 CIC1 Register Map

Table 6-31 describes the CIC1 registers.

Table 6-31. CIC1 Register

ADDRESS OFFSET	REGISTER MNEMONIC	REGISTER NAME
0x0	REVISION_REG	Revision Register
0x10	GLOBAL_ENABLE_HINT_REG	Global Host Int Enable Register
0x20	STATUS_SET_INDEX_REG	Status Set Index Register
0x24	STATUS_CLR_INDEX_REG	Status Clear Index Register
0x28	ENABLE_SET_INDEX_REG	Enable Set Index Register
0x2c	ENABLE_CLR_INDEX_REG	Enable Clear Index Register
0x34	HINT_ENABLE_SET_INDEX_REG	Host Int Enable Set Index Register
0x38	HINT_ENABLE_CLR_INDEX_REG	Host Int Enable Clear Index Register
0x200	RAW_STATUS_REG0	Raw Status Register 0
0x204	RAW_STATUS_REG1	Raw Status Register 1
0x208	RAW_STATUS_REG2	Raw Status Register 2
0x20c	RAW_STATUS_REG3	Raw Status Register 3
0x210	RAW_STATUS_REG4	Raw Status Register 4
0x280	ENA_STATUS_REG0	Enabled Status Register 0
0x284	ENA_STATUS_REG1	Enabled Status Register 1
0x288	ENA_STATUS_REG2	Enabled Status Register 2
0x28c	ENA_STATUS_REG3	Enabled Status Register 3
0x290	ENA_STATUS_REG4	Enabled Status Register 4
0x300	ENABLE_REG0	Enable Register 0
0x304	ENABLE_REG1	Enable Register 1
0x308	ENABLE_REG2	Enable Register 2
0x30c	ENABLE_REG3	Enable Register 3
0x310	ENABLE_REG4	Enable Register 4
0x380	ENABLE_CLR_REG0	Enable Clear Register 0
0x384	ENABLE_CLR_REG1	Enable Clear Register 1
0x388	ENABLE_CLR_REG2	Enable Clear Register 2
0x38c	ENABLE_CLR_REG3	Enable Clear Register 3
0x390	ENABLE_CLR_REG4	Enable Clear Register 4
0x400	CH_MAP_REG0	Interrupt Channel Map Register for 0 to 0+3
0x404	CH_MAP_REG1	Interrupt Channel Map Register for 4 to 4+3
0x408	CH_MAP_REG2	Interrupt Channel Map Register for 8 to 8+3
0x40c	CH_MAP_REG3	Interrupt Channel Map Register for 12 to 12+3
0x410	CH_MAP_REG4	Interrupt Channel Map Register for 16 to 16+3
0x414	CH_MAP_REG5	Interrupt Channel Map Register for 20 to 20+3
0x418	CH_MAP_REG6	Interrupt Channel Map Register for 24 to 24+3
0x41c	CH_MAP_REG7	Interrupt Channel Map Register for 28 to 28+3
0x420	CH_MAP_REG8	Interrupt Channel Map Register for 32 to 32+3
0x424	CH_MAP_REG9	Interrupt Channel Map Register for 36 to 36+3
0x428	CH_MAP_REG10	Interrupt Channel Map Register for 40 to 40+3
0x42c	CH_MAP_REG11	Interrupt Channel Map Register for 44 to 44+3
0x430	CH_MAP_REG12	Interrupt Channel Map Register for 48 to 48+3
0x434	CH_MAP_REG13	Interrupt Channel Map Register for 52 to 52+3
0x438	CH_MAP_REG14	Interrupt Channel Map Register for 56 to 56+3

Copyright © 2012–2016, Texas Instruments Incorporated

Table 6-31. CIC1 Register (continued)

ADDRESS OFFSET	REGISTER MNEMONIC	REGISTER NAME
0x43c	CH_MAP_REG15	Interrupt Channel Map Register for 60 to 60+3
0x440	CH_MAP_REG16	Interrupt Channel Map Register for 64 to 64+3
0x444	CH_MAP_REG17	Interrupt Channel Map Register for 68 to 68+3
0x448	CH_MAP_REG18	Interrupt Channel Map Register for 72 to 72+3
0x44c	CH_MAP_REG19	Interrupt Channel Map Register for 76 to 76+3
0x450	CH_MAP_REG20	Interrupt Channel Map Register for 80 to 80+3
0x454	CH_MAP_REG21	Interrupt Channel Map Register for 84 to 84+3
0x458	CH_MAP_REG22	Interrupt Channel Map Register for 88 to 88+3
0x45c	CH_MAP_REG23	Interrupt Channel Map Register for 92 to 92+3
0x460	CH_MAP_REG24	Interrupt Channel Map Register for 96 to 96+3
0x464	CH_MAP_REG25	Interrupt Channel Map Register for 100 to 100+3
0x468	CH_MAP_REG26	Interrupt Channel Map Register for 104 to 104+3
0x46c	CH_MAP_REG27	Interrupt Channel Map Register for 108 to 108+3
0x470	CH_MAP_REG28	Interrupt Channel Map Register for 112 to 112+3
0x474	CH_MAP_REG29	Interrupt Channel Map Register for 116 to 116+3
0x478	CH_MAP_REG30	Interrupt Channel Map Register for 120 to 120+3
0x47c	CH_MAP_REG31	Interrupt Channel Map Register for 124 to 124+3
0x480	CH_MAP_REG32	Interrupt Channel Map Register for 128 to 128+3
0x484	CH_MAP_REG33	Interrupt Channel Map Register for 132 to 132+3
0x488	CH_MAP_REG34	Interrupt Channel Map Register for 136 to 136+3
0x48c	CH_MAP_REG35	Interrupt Channel Map Register for 140 to 140+3
0x490	CH_MAP_REG36	Interrupt Channel Map Register for 144 to 144+3
0x494	CH_MAP_REG37	Interrupt Channel Map Register for 148 to 148+3
0x498	CH_MAP_REG38	Interrupt Channel Map Register for 152 to 152+3
0x49c	CH_MAP_REG39	Interrupt Channel Map Register for 156 to 156+3
0x800	HINT_MAP_REG0	Host Interrupt Map Register for 0 to 0+3
0x804	HINT_MAP_REG1	Host Interrupt Map Register for 4 to 4+3
0x808	HINT_MAP_REG2	Host Interrupt Map Register for 8 to 8+3
0x80c	HINT_MAP_REG3	Host Interrupt Map Register for 12 to 12+3
0x810	HINT_MAP_REG4	Host Interrupt Map Register for 16 to 16+3
0x814	HINT_MAP_REG5	Host Interrupt Map Register for 20 to 20+3
0x818	HINT_MAP_REG6	Host Interrupt Map Register for 24 to 24+3
0x81c	HINT_MAP_REG7	Host Interrupt Map Register for 28 to 28+3
0x820	HINT_MAP_REG8	Host Interrupt Map Register for 32 to 32+3
0x824	HINT_MAP_REG9	Host Interrupt Map Register for 36 to 36+3
0x828	HINT_MAP_REG10	Host Interrupt Map Register for 40 to 40+3
0x82c	HINT_MAP_REG11	Host Interrupt Map Register for 44 to 44+3
0x830	HINT_MAP_REG12	Host Interrupt Map Register for 48 to 48+3
0x834	HINT_MAP_REG13	Host Interrupt Map Register for 52 to 52+3
0x838	HINT_MAP_REG14	Host Interrupt Map Register for 56 to 56+3
0x83c	HINT_MAP_REG15	Host Interrupt Map Register for 60 to 60+3
0x1500	ENABLE_HINT_REG0	Host Int Enable Register 0
0x1504	ENABLE_HINT_REG1	Host Int Enable Register 1

Copyright © 2012–2016, Texas Instruments Incorporated

6.9.2.3 CIC2 Register Map

Table 6-32 describes the CIC2 registers.

Table 6-32. CIC2 Register

ADDRESS OFFSET	REGISTER MNEMONIC	REGISTER NAME
0x0	REVISION_REG	Revision Register
0x10	GLOBAL_ENABLE_HINT_REG	Global Host Int Enable Register
0x20	STATUS_SET_INDEX_REG	Status Set Index Register
0x24	STATUS_CLR_INDEX_REG	Status Clear Index Register
0x28	ENABLE_SET_INDEX_REG	Enable Set Index Register
0x2c	ENABLE_CLR_INDEX_REG	Enable Clear Index Register
0x34	HINT_ENABLE_SET_INDEX_REG	Host Int Enable Set Index Register
0x38	HINT_ENABLE_CLR_INDEX_REG	Host Int Enable Clear Index Register
0x200	RAW_STATUS_REG0	Raw Status Register 0
0x204	RAW_STATUS_REG1	Raw Status Register 1
0x208	RAW_STATUS_REG2	Raw Status Register 2
0x280	ENA_STATUS_REG0	Enabled Status Register 0
0x284	ENA_STATUS_REG1	Enabled Status Register 1
0x288	ENA_STATUS_REG2	Enabled Status Register 2
0x300	ENABLE_REG0	Enable Register 0
0x304	ENABLE_REG1	Enable Register 1
0x308	ENABLE_REG2	Enable Register 2
0x380	ENABLE_CLR_REG0	Enable Clear Register 0
0x384	ENABLE_CLR_REG1	Enable Clear Register 1
0x388	ENABLE_CLR_REG2	Enable Clear Register 2
0x400	CH_MAP_REG0	Interrupt Channel Map Register for 0 to 0+3
0x404	CH_MAP_REG1	Interrupt Channel Map Register for 4 to 4+3
0x408	CH_MAP_REG2	Interrupt Channel Map Register for 8 to 8+3
0x40c	CH_MAP_REG3	Interrupt Channel Map Register for 12 to 12+3
0x410	CH_MAP_REG4	Interrupt Channel Map Register for 16 to 16+3
0x414	CH_MAP_REG5	Interrupt Channel Map Register for 20 to 20+3
0x418	CH_MAP_REG6	Interrupt Channel Map Register for 24 to 24+3
0x41c	CH_MAP_REG7	Interrupt Channel Map Register for 28 to 28+3
0x420	CH_MAP_REG8	Interrupt Channel Map Register for 32 to 32+3
0x424	CH_MAP_REG9	Interrupt Channel Map Register for 36 to 36+3
0x428	CH_MAP_REG10	Interrupt Channel Map Register for 40 to 40+3
0x42c	CH_MAP_REG11	Interrupt Channel Map Register for 44 to 44+3
0x430	CH_MAP_REG12	Interrupt Channel Map Register for 48 to 48+3
0x434	CH_MAP_REG13	Interrupt Channel Map Register for 52 to 52+3
0x438	CH_MAP_REG14	Interrupt Channel Map Register for 56 to 56+3
0x43c	CH_MAP_REG15	Interrupt Channel Map Register for 60 to 60+3
0x440	CH_MAP_REG16	Interrupt Channel Map Register for 64 to 64+3
0x444	CH_MAP_REG17	Interrupt Channel Map Register for 68 to 68+3
0x448	CH_MAP_REG18	Interrupt Channel Map Register for 72 to 72+3
0x44c	CH_MAP_REG19	Interrupt Channel Map Register for 76 to 76+3
0x800	HINT_MAP_REG0	Host Interrupt Map Register for 0 to 0+3
0x804	HINT_MAP_REG1	Host Interrupt Map Register for 4 to 4+3
0x808	HINT_MAP_REG2	Host Interrupt Map Register for 8 to 8+3

Copyright © 2012–2016, Texas Instruments Incorporated

Table 6-32. CIC2 Register (continued)

ADDRESS OFFSET	REGISTER MNEMONIC	REGISTER NAME
0x80c	HINT_MAP_REG3	Host Interrupt Map Register for 12 to 12+3
0x810	HINT_MAP_REG4	Host Interrupt Map Register for 16 to 16+3
0x814	HINT_MAP_REG5	Host Interrupt Map Register for 20 to 20+3
0x818	HINT_MAP_REG6	Host Interrupt Map Register for 24 to 24+3
0x81c	HINT_MAP_REG7	Host Interrupt Map Register for 28 to 28+3
0x1500	ENABLE_HINT_REG0	Host Int Enable Register 0

6.9.3 Interprocessor Register Map

Table 6-33 describes the IPC generation registers.

Table 6-33. IPC Generation Registers (IPCGRx)

ADDRESS START	ADDRESS END	SIZE	REGISTER NAME	DESCRIPTION
0x02620200	0x02620203	4B	NMIGR0	NMI Event Generation Register for CorePac0
0x02620204	0x02620207	4B	NMIGR1	NMI Event Generation Register for CorePac 1 (C6657 only)
0x02620208	0x0262020B	4B	Reserved	Reserved
0x0262020C	0x0262020F	4B	Reserved	Reserved
0x02620210	0x02620213	4B	Reserved	Reserved
0x02620214	0x02620217	4B	Reserved	Reserved
0x02620218	0x0262021B	4B	Reserved	Reserved
0x0262021C	0x0262021F	4B	Reserved	Reserved
0x02620220	0x0262023F	32B	Reserved	Reserved
0x02620240	0x02620243	4B	IPCGR0	IPC Generation Register for CorePac 0
0x02620244	0x02620247	4B	IPCGR1	IPC Generation Register for CorePac 1 (C6657 only)
0x02620248	0x0262024B	4B	Reserved	Reserved
0x0262024C	0x0262024F	4B	Reserved	Reserved
0x02620250	0x02620253	4B	Reserved	Reserved
0x02620254	0x02620257	4B	Reserved	Reserved
0x02620258	0x0262025B	4B	Reserved	Reserved
0x0262025C	0x0262025F	4B	Reserved	Reserved
0x02620260	0x0262027B	28B	Reserved	Reserved
0x0262027C	0x0262027F	4B	IPCGRH	IPC Generation Register for Host
0x02620280	0x02620283	4B	IPCAR0	IPC Acknowledgement Register for CorePac 0
0x02620284	0x02620287	4B	IPCAR1	IPC Acknowledgement Register for CorePac 1 (C6657 only)
0x02620288	0x0262028B	4B	Reserved	Reserved
0x0262028C	0x0262028F	4B	Reserved	Reserved
0x02620290	0x02620293	4B	Reserved	Reserved
0x02620294	0x02620297	4B	Reserved	Reserved
0x02620298	0x0262029B	4B	Reserved	Reserved
0x0262029C	0x0262029F	4B	Reserved	Reserved
0x026202A0	0x026202BB	28B	Reserved	Reserved
0x026202BC	0x026202BF	4B	IPCARH	IPC Acknowledgement Register for Host

Copyright © 2012–2016, Texas Instruments Incorporated

6.9.4 NMI and LRESET

Nonmaskable interrupts (NMI) can be generated by chip-level registers and the LRESET can be generated by software writing into LPSC registers. LRESET and NMI can also be asserted by device pins or watchdog timers. One NMI pin and one LRESET pin are shared by all CorePacs on the device. The CORESEL[3:0] pins can be configured to select between the CorePacs available as shown in Table 6-34.

Table 6-34. LRESET and NMI Decoding

CORESEL[1:0] PIN INPUT	LRESET PIN INPUT	NMI PIN INPUT	LRESETNMIEN PIN INPUT	RESET MUX BLOCK OUTPUT
XX	X	X	1	No local reset or NMI assertion.
00	0	X	0	Assert local reset to CorePac 0
01	0	X	0	Assert local reset to CorePac 1 (C6657) or Reserved (C6655)
1x	0	X	0	Assert local reset to all CorePacs
00	1	1	0	Deassert local reset and NMI to CorePac 0
01	1	1	0	Deassert local reset and NMI to CorePac 1 (C6657) or Reserved (C6655)
1x	1	1	0	Deassert local reset and NMI to all CorePacs
00	1	0	0	Assert NMI to CorePac 0
01	1	0	0	Assert NMI to CorePac 1 (C6657) or Reserved (C6655)
1x	1	0	0	Assert NMI to all CorePacs

6.10 Memory Protection Unit (MPU)

The C665x supports five MPUs:

- One MPU is used to protect main CORE/3 CFG TeraNet (CFG space of all slave devices on the TeraNet is protected by the MPU).
- Two MPUs are used for QM_SS (one for the DATA PORT port and the other is for the CFG PORT port).
- One MPU is used for Semaphore.
- One MPU is used for EMIF16

This section contains MPU register map and details of device-specific MPU registers only. For MPU features and details of generic MPU registers, see the Memory Protection Unit (MPU) for KeyStone Devices User's Guide.

Table 6-35 lists the configuration of each MPU and Table 6-36 lists the memory regions protected by each MPU.

Table 6-35. MPU Default Configuration

SETTING	MPU0 (MAIN CFG TERANET)	MPU1 (QM_SS DATA PORT)	MPU2 (QM_SS CFG PORT)	MPU3 (SEMAPHORE)	MPU4 (EMIF16)
Default permission	Assume allowed	Assume allowed	Assume allowed	Assume allowed	Assume allowed
Number of allowed IDs supported	16	16	16	16	16
Number of programmable ranges supported	16	5	16	1	16
Compare width	1KB granularity	1KB granularity	1KB granularity	1KB granularity	1KB granularity

Copyright © 2012–2016, Texas Instruments Incorporated

Table 6-36. MPU Memory Regions

	MEMORY PROTECTION	START ADDRESS	END ADDRESS
MPU0	Main CFG TeraNet	0x01D00000	0x026207FF
MPU1	QM_SS DATA PORT	0x34000000	0x340BFFFF
MPU2	QM_SS CFG PORT	0x02A00000	0x02ABFFFF
MPU3	Semaphore	0x02640000	0x026407FF
MPU4	EMIF16	0x70000000	0x7FFFFFFF

Table 6-37 shows the privilege ID of each CORE and every mastering peripheral. Table 6-37 also shows the privilege level (supervisor vs. user), and access type (instruction read vs. data/DMA read or write) of each master on the device. In some cases, a particular setting depends on software being executed at the time of the access or the configuration of the master peripheral.

Table 6-37. Privilege ID Settings

PRIVILEGE ID	MASTER	PRIVILEGE LEVEL	ACCESS TYPE
0	CorePac0	SW dependant, driven by MSMC	DMA
1	CorePac1 (C6657 only)	SW dependant, driven by MSMC	DMA
2	Reserved		
3	Reserved		
4	Reserved		
5	Reserved		
6	uPP	User	DMA
7	EMAC	User	DMA
8	QM_PKTDMA	User	DMA
9	SRIO_Packet DMA/SRIO_M	User/Driven by SRIO block, user mode and supervisor mode is determined on a per-transaction basis. Only the transaction with source ID matching the value in the SupervisorID Register is granted supervisor mode.	DMA
10	QM_second	User	DMA
11	PCIe	Supervisor	DMA
12	DAP	Driven by Debug_SS	DMA
13	HyperLink	Supervisor	DMA
14	HyperLink	Supervisor	DMA
15	HyperLink	Supervisor	DMA

Copyright © 2012–2016, Texas Instruments Incorporated

Table 6-38 shows the master ID of each CorePac and every mastering peripheral. Master IDs are used to determine allowed connections between masters and slaves. Unlike privilege IDs, which can be shared across different masters, master IDs are unique to each master.

Table 6-38. Master ID Settings(1)

MASTER ID	MASTER		MASTER ID	MASTER
0	CorePac0		40 - 47	Reserved
1	CorePac1 (C6657) or Reserved (C6655)		48	DAP
2	Reserved		49	Reserved
3	Reserved		50	EDMA3_CC
4	Reserved		51	Reserved
5	Reserved		52	MSMC(2)
6	Reserved		53	PCIe
7	Reserved		54	SRIO_Master
8	CorePac0_CFG		55	HyperLink
9	CorePac1_CFG (C6657) or Reserved (C6655)		56	EMAC
10	Reserved		57 - 87	Reserved
11	Reserved		88 - 91	QM_PKTDMA
12	Reserved		92 - 93	QM_Second
13	Reserved		94	Reserved
14	Reserved		95	uPP
15	Reserved		96 - 127	Reserved
16	Reserved		128	Tracer_core_0(3)
17	Reserved		129	Tracer_core_1 (C6657) or Reserved (C6655)
18	Reserved		130	Reserved
19	Reserved		131	Reserved
20	Reserved		132	Reserved
21	Reserved		133	Reserved
22	Reserved		134	Reserved
23	Reserved		135	Reserved
24	Reserved		136	Tracer_MSMC0
25	Reserved		137	Tracer_MSMC1
26	Reserved		138	Tracer_MSMC2
27	Reserved		139	Tracer_MSMC3
28	EDMA_TC0 read		140	Tracer_DDR
29	EDMA_TC0 write		141	Tracer_SEM
30	EDMA_TC1 read		142	Tracer_QM_CFG
31	EDMA_TC1 write		143	Tracer_QM_DMA
32	EDMA_TC2 read		144	Tracer_CFG
33	EDMA_TC2 write		145	Reserved
34	EDMA_TC3 read		146	Reserved
35	EDMA_TC3 write		147	Reserved
36 - 37	Reserved		148	Tracer_EMIF16
38 - 39	SRIO_PKTDMA			

(1) Some of the PKTDMA-based peripherals require multiple master IDs. QMS_PKTDMA is assigned with 88,89,90,91, but only 88-89 are actually used. There are two master ID values are assigned for the QM_second master port, one master ID for external linking RAM and the other one for the PDSP/MCDM accesses.
(2) The master ID for MSMC is for the transactions initiated by MSMC internally and sent to the DDR.
(3) All Tracers are set to the same master ID and bit 7 of the master ID must be 1.

Copyright © 2012–2016, Texas Instruments Incorporated

6.10.1 MPU Registers

This section includes the offsets for MPU registers and definitions for device specific MPU registers.

6.10.1.1 MPU Register Map

Table 6-39. MPU0 Registers

OFFSET	NAME	DESCRIPTION
0h	REVID	Revision ID
4h	CONFIG	Configuration
10h	IRAWSTAT	Interrupt raw status/set
14h	IENSTAT	Interrupt enable status/clear
18h	IENSET	Interrupt enable
1Ch	IENCLR	Interrupt enable clear
20h	EOI	End of interrupt
200h	PROG0_MPSAR	Programmable range 0, start address
204h	PROG0_MPEAR	Programmable range 0, end address
208h	PROG0_MPPA	Programmable range 0, memory page protection attributes
210h	PROG1_MPSAR	Programmable range 1, start address
214h	PROG1_MPEAR	Programmable range 1, end address
218h	PROG1_MPPA	Programmable range 1, memory page protection attributes
220h	PROG2_MPSAR	Programmable range 2, start address
224h	PROG2_MPEAR	Programmable range 2, end address
228h	PROG2_MPPA	Programmable range 2, memory page protection attributes
230h	PROG3_MPSAR	Programmable range 3, start address
234h	PROG3_MPEAR	Programmable range 3, end address
238h	PROG3_MPPA	Programmable range 3, memory page protection attributes
240h	PROG4_MPSAR	Programmable range 4, start address
244h	PROG4_MPEAR	Programmable range 4, end address
248h	PROG4_MPPA	Programmable range 4, memory page protection attributes
250h	PROG5_MPSAR	Programmable range 5, start address
254h	PROG5_MPEAR	Programmable range 5, end address
258h	PROG5_MPPA	Programmable range 5, memory page protection attributes
260h	PROG6_MPSAR	Programmable range 6, start address
264h	PROG6_MPEAR	Programmable range 6, end address
268h	PROG6_MPPA	Programmable range 6, memory page protection attributes
270h	PROG7_MPSAR	Programmable range 7, start address
274h	PROG7_MPEAR	Programmable range 7, end address
278h	PROG7_MPPA	Programmable range 7, memory page protection attributes
280h	PROG8_MPSAR	Programmable range 8, start address
284h	PROG8_MPEAR	Programmable range 8, end address
288h	PROG8_MPPA	Programmable range 8, memory page protection attributes
290h	PROG9_MPSAR	Programmable range 9, start address
294h	PROG9_MPEAR	Programmable range 9, end address
298h	PROG9_MPPA	Programmable range 9, memory page protection attributes
2A0h	PROG10_MPSAR	Programmable range 10, start address
2A4h	PROG10_MPEAR	Programmable range 10, end address
2A8h	PROG10_MPPA	Programmable range 10, memory page protection attributes
2B0h	PROG11_MPSAR	Programmable range 11, start address
2B4h	PROG11_MPEAR	Programmable range 11, end address

Copyright © 2012–2016, Texas Instruments Incorporated

Table 6-39. MPU0 Registers (continued)

OFFSET	NAME	DESCRIPTION
2B8h	PROG11_MPPA	Programmable range 11, memory page protection attributes
2C0h	PROG12_MPSAR	Programmable range 12, start address
2C4h	PROG12_MPEAR	Programmable range 12, end address
2C8h	PROG12_MPPA	Programmable range 12, memory page protection attributes
2D0h	PROG13_MPSAR	Programmable range 13, start address
2D4h	PROG13_MPEAR	Programmable range 13, end address
2Dh	PROG13_MPPA	Programmable range 13, memory page protection attributes
2E0h	PROG14_MPSAR	Programmable range 14, start address
2E4h	PROG14_MPEAR	Programmable range 14, end address
2E8h	PROG14_MPPA	Programmable range 14, memory page protection attributes
2F0h	PROG15_MPSAR	Programmable range 15, start address
2F4h	PROG15_MPEAR	Programmable range 15, end address
2F8h	PROG15_MPPA	Programmable range 15, memory page protection attributes
300h	FLTADDRR	Fault address
304h	FLTSTAT	Fault status
308h	FLTCLR	Fault clear

Table 6-40. MPU1 Registers

OFFSET	NAME	DESCRIPTION
0h	REVID	Revision ID
4h	CONFIG	Configuration
10h	IRAWSTAT	Interrupt raw status/set
14h	IENSTAT	Interrupt enable status/clear
18h	IENSET	Interrupt enable
1Ch	IENCLR	Interrupt enable clear
20h	EOI	End of interrupt
200h	PROG0_MPSAR	Programmable range 0, start address
204h	PROG0_MPEAR	Programmable range 0, end address
208h	PROG0_MPPA	Programmable range 0, memory page protection attributes
210h	PROG1_MPSAR	Programmable range 1, start address
214h	PROG1_MPEAR	Programmable range 1, end address
218h	PROG1_MPPA	Programmable range 1, memory page protection attributes
220h	PROG2_MPSAR	Programmable range 2, start address
224h	PROG2_MPEAR	Programmable range 2, end address
228h	PROG2_MPPA	Programmable range 2, memory page protection attributes
230h	PROG3_MPSAR	Programmable range 3, start address
234h	PROG3_MPEAR	Programmable range 3, end address
238h	PROG3_MPPA	Programmable range 3, memory page protection attributes
240h	PROG4_MPSAR	Programmable range 4, start address
244h	PROG4_MPEAR	Programmable range 4, end address
248h	PROG4_MPPA	Programmable range 4, memory page protection attributes
300h	FLTADDRR	Fault address
304h	FLTSTAT	Fault status
308h	FLTCLR	Fault clear

Copyright © 2012–2016, Texas Instruments Incorporated

Table 6-41. MPU2 Registers

OFFSET	NAME	DESCRIPTION
0h	REVID	Revision ID
4h	CONFIG	Configuration
10h	IRAWSTAT	Interrupt raw status/set
14h	IENSTAT	Interrupt enable status/clear
18h	IENSET	Interrupt enable
1Ch	IENCLR	Interrupt enable clear
20h	EOI	End of interrupt
200h	PROG0_MPSAR	Programmable range 0, start address
204h	PROG0_MPEAR	Programmable range 0, end address
208h	PROG0_MPPA	Programmable range 0, memory page protection attributes
210h	PROG1_MPSAR	Programmable range 1, start address
214h	PROG1_MPEAR	Programmable range 1, end address
218h	PROG1_MPPA	Programmable range 1, memory page protection attributes
220h	PROG2_MPSAR	Programmable range 2, start address
224h	PROG2_MPEAR	Programmable range 2, end address
228h	PROG2_MPPA	Programmable range 2, memory page protection attributes
230h	PROG3_MPSAR	Programmable range 3, start address
234h	PROG3_MPEAR	Programmable range 3, end address
238h	PROG3_MPPA	Programmable range 3, memory page protection attributes
240h	PROG4_MPSAR	Programmable range 4, start address
244h	PROG4_MPEAR	Programmable range 4, end address
248h	PROG4_MPPA	Programmable range 4, memory page protection attributes
250h	PROG5_MPSAR	Programmable range 5, start address
254h	PROG5_MPEAR	Programmable range 5, end address
258h	PROG5_MPPA	Programmable range 5, memory page protection attributes
260h	PROG6_MPSAR	Programmable range 6, start address
264h	PROG6_MPEAR	Programmable range 6, end address
268h	PROG6_MPPA	Programmable range 6, memory page protection attributes
270h	PROG7_MPSAR	Programmable range 7, start address
274h	PROG7_MPEAR	Programmable range 7, end address
278h	PROG7_MPPA	Programmable range 7, memory page protection attributes
280h	PROG8_MPSAR	Programmable range 8, start address
284h	PROG8_MPEAR	Programmable range 8, end address
288h	PROG8_MPPA	Programmable range 8, memory page protection attributes
290h	PROG9_MPSAR	Programmable range 9, start address
294h	PROG9_MPEAR	Programmable range 9, end address
298h	PROG9_MPPA	Programmable range 9, memory page protection attributes
2A0h	PROG10_MPSAR	Programmable range 10, start address
2A4h	PROG10_MPEAR	Programmable range 10, end address
2A8h	PROG10_MPPA	Programmable range 10, memory page protection attributes
2B0h	PROG11_MPSAR	Programmable range 11, start address
2B4h	PROG11_MPEAR	Programmable range 11, end address
2B8h	PROG11_MPPA	Programmable range 11, memory page protection attributes
2C0h	PROG12_MPSAR	Programmable range 12, start address
2C4h	PROG12_MPEAR	Programmable range 12, end address
2C8h	PROG12_MPPA	Programmable range 12, memory page protection attributes
2D0h	PROG13_MPSAR	Programmable range 13, start address

Copyright © 2012–2016, Texas Instruments Incorporated

Table 6-41. MPU2 Registers (continued)

OFFSET	NAME	DESCRIPTION
2D4h	PROG13_MPEAR	Programmable range 13, end address
2Dh	PROG13_MPPA	Programmable range 13, memory page protection attributes
2E0h	PROG14_MPSAR	Programmable range 14, start address
2E4h	PROG14_MPEAR	Programmable range 14, end address
2E8h	PROG14_MPPA	Programmable range 14, memory page protection attributes
2F0h	PROG15_MPSAR	Programmable range 15, start address
2F4h	PROG15_MPEAR	Programmable range 15, end address
2F8h	PROG15_MPPA	Programmable range 15, memory page protection attributes
300h	FLTADDRR	Fault address
304h	FLTSTAT	Fault status
308h	FLTCLR	Fault clear

Table 6-42. MPU3 Registers

OFFSET	NAME	DESCRIPTION
0h	REVID	Revision ID
4h	CONFIG	Configuration
10h	IRAWSTAT	Interrupt raw status/set
14h	IENSTAT	Interrupt enable status/clear
18h	IENSET	Interrupt enable
1Ch	IENCLR	Interrupt enable clear
20h	EOI	End of interrupt
200h	PROG0_MPSAR	Programmable range 0, start address
204h	PROG0_MPEAR	Programmable range 0, end address
208h	PROG0_MPPA	Programmable range 0, memory page protection attributes
300h	FLTADDRR	Fault address
304h	FLTSTAT	Fault status
308h	FLTCLR	Fault clear

Copyright © 2012–2016, Texas Instruments Incorporated

Table 6-43. MPU4 Registers

OFFSET	NAME	DESCRIPTION
0h	REVID	Revision ID
4h	CONFIG	Configuration
10h	IRAWSTAT	Interrupt raw status/set
14h	IENSTAT	Interrupt enable status/clear
18h	IENSET	Interrupt enable
1Ch	IENCLR	Interrupt enable clear
20h	EOI	End of interrupt
200h	PROG0_MPSAR	Programmable range 0, start address
204h	PROG0_MPEAR	Programmable range 0, end address
208h	PROG0_MPPA	Programmable range 0, memory page protection attributes
210h	PROG1_MPSAR	Programmable range 1, start address
214h	PROG1_MPEAR	Programmable range 1, end address
218h	PROG1_MPPA	Programmable range 1, memory page protection attributes
220h	PROG2_MPSAR	Programmable range 2, start address
224h	PROG2_MPEAR	Programmable range 2, end address
228h	PROG2_MPPA	Programmable range 2, memory page protection attributes
230h	PROG3_MPSAR	Programmable range 3, start address
234h	PROG3_MPEAR	Programmable range 3, end address
238h	PROG3_MPPA	Programmable range 3, memory page protection attributes
240h	PROG4_MPSAR	Programmable range 4, start address
244h	PROG4_MPEAR	Programmable range 4, end address
248h	PROG4_MPPA	Programmable range 4, memory page protection attributes
250h	PROG5_MPSAR	Programmable range 5, start address
254h	PROG5_MPEAR	Programmable range 5, end address
258h	PROG5_MPPA	Programmable range 5, memory page protection attributes
260h	PROG6_MPSAR	Programmable range 6, start address
264h	PROG6_MPEAR	Programmable range 6, end address
268h	PROG6_MPPA	Programmable range 6, memory page protection attributes
270h	PROG7_MPSAR	Programmable range 7, start address
274h	PROG7_MPEAR	Programmable range 7, end address
278h	PROG7_MPPA	Programmable range 7, memory page protection attributes
280h	PROG8_MPSAR	Programmable range 8, start address
284h	PROG8_MPEAR	Programmable range 8, end address
288h	PROG8_MPPA	Programmable range 8, memory page protection attributes
290h	PROG9_MPSAR	Programmable range 9, start address
294h	PROG9_MPEAR	Programmable range 9, end address
298h	PROG9_MPPA	Programmable range 9, memory page protection attributes
2A0h	PROG10_MPSAR	Programmable range 10, start address
2A4h	PROG10_MPEAR	Programmable range 10, end address
2A8h	PROG10_MPPA	Programmable range 10, memory page protection attributes
2B0h	PROG11_MPSAR	Programmable range 11, start address
2B4h	PROG11_MPEAR	Programmable range 11, end address
2B8h	PROG11_MPPA	Programmable range 11, memory page protection attributes
2C0h	PROG12_MPSAR	Programmable range 12, start address
2C4h	PROG12_MPEAR	Programmable range 12, end address
2C8h	PROG12_MPPA	Programmable range 12, memory page protection attributes
2D0h	PROG13_MPSAR	Programmable range 13, start address

Copyright © 2012–2016, Texas Instruments Incorporated

Table 6-43. MPU4 Registers (continued)

OFFSET	NAME	DESCRIPTION
2D4h	PROG13_MPEAR	Programmable range 13, end address
2Dh	PROG13_MPPA	Programmable range 13, memory page protection attributes
2E0h	PROG14_MPSAR	Programmable range 14, start address
2E4h	PROG14_MPEAR	Programmable range 14, end address
2E8h	PROG14_MPPA	Programmable range 14, memory page protection attributes
2F0h	PROG15_MPSAR	Programmable range 15, start address
2F4h	PROG15_MPEAR	Programmable range 15, end address
2F8h	PROG15_MPPA	Programmable range 15, memory page protection attributes
300h	FLTADDRR	Fault address
304h	FLTSTAT	Fault status
308h	FLTCLR	Fault clear

6.10.1.2 Device-Specific MPU Registers

6.10.1.2.1 Configuration Register (CONFIG)

The Configuration Register (CONFIG) contains the configuration value of the MPU. CONFIG is shown in Figure 6-19 and described in Table 6-44.

Figure 6-19. Configuration Register (CONFIG)

		31 24	23 20	19 16	15 12	11 1	0
		ADDR_WIDTH	NUM_FIXED	NUM_PROG	NUM_AIDS	Reserved	ASSUME_ALLOWED
Reset Values	MPU0	R-0	R-0	R-16	R-16	R-0	R-1
	MPU1	R-0	R-0	R-5	R-16	R-0	R-1
	MPU2	R-0	R-0	R-16	R-16	R-0	R-1
	MPU3	R-0	R-0	R-1	R-16	R-0	R-1
	MPU4	R-0	R-0	R-16	R-16	R-0	R-1

Legend: R = Read only; -*n* = value after reset

Table 6-44. Configuration Register (CONFIG) Field Descriptions

BIT	FIELD	DESCRIPTION
31 – 24	ADDR_WIDTH	Address alignment for range checking • 0 = 1KB alignment • 6 = 64KB alignment
23 – 20	NUM_FIXED	Number of fixed address ranges
19 – 16	NUM_PROG	Number of programmable address ranges
15 – 12	NUM_AIDS	Number of supported AIDs
11 – 1	Reserved	Reserved. These bits will always reads as 0.
0	ASSUME_ALLOWED	Assume allowed bit. When an address is not covered by any MPU protection range, this bit determines whether the transfer is assumed to be allowed or not. • 0 = Assume disallowed • 1 = Assume allowed

Copyright © 2012–2016, Texas Instruments Incorporated

6.10.2 MPU Programmable Range Registers

6.10.2.1 Programmable Range *n* Start Address Register (PROG*n*_MPSAR)

The Programmable Address Start Register holds the start address for the range. This register is writeable by a supervisor entity only.

The start address must be aligned on a page boundary. The size of the page is 1KB. The size of the page determines the width of the address field in MPSAR and MPEAR. PROGn_MPSAR is shown in Figure 6-20 and described in Table 6-45.

Figure 6-20. Programmable Range n Start Address Register (PROGn_MPSAR)

31	10	9	0
START_ADDR		Reserved	
R/W		R	

Legend: R = Read only; R/W = Read/Write

Table 6-45. Programmable Range *n* Start Address Register (PROG*n*_MPSAR) Field Descriptions

BIT	FIELD	DESCRIPTION
31 – 10	START_ADDR	Start address for range n.
9 – 0	Reserved	Reserved and these bits always read as 0.

Copyright © 2012–2016, Texas Instruments Incorporated

6.10.2.2 Programmable Range *n* End Address Register (PROG*n*_MPEAR)

The Programmable Address End Register holds the end address for the range. This register is writeable by a supervisor entity only.

The end address must be aligned on a page boundary. The size of the page depends on the MPU number. The page size for MPU1 is 1KB and for MPU2 it is 64KB. The size of the page determines the width of the address field in MPSAR and MPEAR. PROGn_MPEAR is shown in Figure 6-21 and described in Table 6-46.

Figure 6-21. Programmable Range n End Address Register (PROGn_MPEAR)

31	10	9	0
END_ADDR		Reserved	
R/W		R	

Legend: R = Read only; R/W = Read/Write

Table 6-46. Programmable Range n End Address Register (PROGn_MPEAR) Field Descriptions

BIT	FIELD	DESCRIPTION
31 – 10	END_ADDR	End address for range n.
9 – 0	Reserved	Reserved and these bits always read as 3FFh.

Copyright © 2012–2016, Texas Instruments Incorporated

6.10.2.3 Programmable Range *n* Memory Protection Page Attribute Register (PROG*n*_MPPA)

The Programmable Address Memory Protection Page Attribute Register holds the permissions for the region. This register is writeable only by a nondebug supervisor entity. PROGn_MPPA is shown in Figure 6-22 and described in Table 6-47.

Figure 6-22. Programmable Range n Memory Protection Page Attribute Register (PROGn_MPPA)

31					26	25	24	23	22	21	20	19	18	17	16	15
Reserved						AID15	AID14	AID13	AID12	AID11	AID10	AID9	AID8	AID7	AID6	AID5
R						R/W	R/W	R/W	R/W	R/W	R/W	R/W	R/W	R/W	R/W	R/W
14	13	12	11	10		9	8		7	6	5	4	3	2	1	0
AID4	AID3	AID2	AID1	AID0		AIDX	Reserved		Reserved	EMU	SR	SW	SX	UR	UW	UX
R/W	R/W	R/W	R/W	R/W		R/W	R		R	R/W	R/W	R/W	R/W	R/W	R/W	R/W

Legend: R = Read only; R/W = Read/Write

Table 6-47. Programmable Range *n* Memory Protection Page Attribute Register (PROG*n*_MPPA) Field Descriptions

BIT	FIELD	DESCRIPTION
31 – 26	Reserved	Reserved. These bits will always reads as 0.
25	AID15	Controls permission check of ID = 15 • 0 = AID is not checked for permissions • 1 = AID is checked for permissions
24	AID14	Controls permission check of ID = 14 • 0 = AID is not checked for permissions • 1 = AID is checked for permissions
23	AID13	Controls permission check of ID = 13 • 0 = AID is not checked for permissions • 1 = AID is checked for permissions
22	AID12	Controls permission check of ID = 12 • 0 = AID is not checked for permissions • 1 = AID is checked for permissions
21	AID11	Controls permission check of ID = 11 • 0 = AID is not checked for permissions • 1 = AID is checked for permissions
20	AID10	Controls permission check of ID = 10 • 0 = AID is not checked for permissions • 1 = AID is checked for permissions
19	AID9	Controls permission check of ID = 9 • 0 = AID is not checked for permissions • 1 = AID is checked for permissions
18	AID8	Controls permission check of ID = 8 • 0 = AID is not checked for permissions • 1 = AID is checked for permissions
17	AID7	Controls permission check of ID = 7 • 0 = AID is not checked for permissions • 1 = AID is checked for permissions
16	AID6	Controls permission check of ID = 6 • 0 = AID is not checked for permissions • 1 = AID is checked for permissions
15	AID5	Controls permission check of ID = 5 • 0 = AID is not checked for permissions • 1 = AID is checked for permissions

Copyright © 2012–2016, Texas Instruments Incorporated

Table 6-47. Programmable Range *n* Memory Protection Page Attribute Register (PROG*n*_MPPA) Field Descriptions (continued)

BIT	FIELD	DESCRIPTION
14	AID4	Controls permission check of ID = 4 • 0 = AID is not checked for permissions • 1 = AID is checked for permissions
13	AID3	Controls permission check of ID = 3 • 0 = AID is not checked for permissions • 1 = AID is checked for permissions
12	AID2	Controls permission check of ID = 2 • 0 = AID is not checked for permissions • 1 = AID is checked for permissions
11	AID1	Controls permission check of ID = 1 • 0 = AID is not checked for permissions • 1 = AID is checked for permissions
10	AID0	Controls permission check of ID = 0 • 0 = AID is not checked for permissions • 1 = AID is checked for permissions
9	AIDX	Controls permission check of ID > 15 • 0 = AID is not checked for permissions • 1 = AID is checked for permissions
8	Reserved	Always reads as 0.
7	Reserved	Always reads as 1.
6	EMU	Emulation (debug) access permission. • 0 = Debug access not allowed. • 1 = Debug access allowed.
5	SR	Supervisor Read permission • 0 = Access not allowed. • 1 = Access allowed.
4	SW	Supervisor Write permission • 0 = Access not allowed. • 1 = Access allowed.
3	SX	Supervisor Execute permission • 0 = Access not allowed. • 1 = Access allowed.
2	UR	User Read permission • 0 = Access not allowed. • 1 = Access allowed
1	UW	User Write permission • 0 = Access not allowed. • 1 = Access allowed.
0	UX	User Execute permission • 0 = Access not allowed. • 1 = Access allowed.

Copyright © 2012–2016, Texas Instruments Incorporated

6.10.2.4 MPU Registers Reset Values

Table 6-48, Table 6-49, Table 6-50, Table 6-51, and Table 6-52 describe the MPU register resets.

Table 6-48. Programmable Range *n* Registers Reset Values for MPU0

	MPU0 (MAIN CFG TERANET)			
PROGRAMMABLE RANGE	**START ADDRESS (PROGn_MPSAR)**	**END ADDRESS (PROGn_MPEAR)**	**MEMORY PAGE PROTECTION ATTRIBUTE (PROGn_MPPA)**	**MEMORY PROTECTION**
PROG0	0x01D0_0000	0x01D8_007F	0x03FF_FCB6	Tracers
PROG1	0x01F0_0000	0x01F7_FFFF	0x03FF_FC80	Reserved
PROG2	0x0200_0000	0x0209_FFFF	0x03FF_FCB6	Reserved
PROG3	0x01E0_0000	0x01EB_FFFF	0x03FF_FCB6	Reserved
PROG4	0x021C_0000	0x021E_0C3F	0x03FF_FCB6	TCP/VCP
PROG5	0x021F_0000	0x021F_7FFF	0x03FF_FCB6	Reserved
PROG6	0x0220_0000	0x0227_007F	0x03FF_FCB6	Timers
PROG7	0x0231_0000	0x0231_03FF	0x03FF_FCB4	PLL
PROG8	0x0232_0000	0x0232_03FF	0x03FF_FCB4	GPIO
PROG9	0x0233_0000	0x0233_03FF	0x03FF_FCB4	SmartReflex
PROG10	0x0235_0000	0x0235_0FFF	0x03FF_FCB4	PSC
PROG11	0x0240_0000	0x0245_3FFF	0x03FF_FCB6	DEBUG_SS, Tracer Formatters
PROG12	0x0250_0000	0x0252_03FF	0x03FF_FCB4	EFUSE
PROG13	0x0253_0000	0x0255_03FF	0x03FF_FCB6	I^2C, UART
PROG14	0x0260_0000	0x0260_BFFF	0x03FF_FCB4	CICs
PROG15	0x0262_0000	0x0262_07FF	0x03FF_FCB4	Chip-level Registers

Table 6-49. Programmable Range *n* Registers Reset Values for MPU1

	MPU1 (QM_SS DATA PORT)			
PROGRAMMABLE RANGE	**START ADDRESS (PROGn_MPSAR)**	**END ADDRESS (PROGn_MPEAR)**	**MEMORY PAGE PROTECTION ATTRIBUTE (PROGn_MPPA)**	**MEMORY PROTECTION**
PROG0	0x3400_0000	0x3401_FFFF	0x03FF_FC80	Queue Manager subsystem data
PROG1	0x3402_0000	0x3405_FFFF	0x000F_FCB6	
PROG2	0x3406_0000	0x3406_7FFF	0x03FF_FCB4	
PROG3	0x3406_8000	0x340B_7FFF	0x03FF_FC80	
PROG4	0x340B_8000	0x340B_FFFF	0x03FF_FCB6	

Copyright © 2012–2016, Texas Instruments Incorporated

Table 6-50. Programmable Range *n* Registers Reset Values for MPU2

PROGRAMMABLE RANGE	MPU2 (QM_SS CFG PORT)			
	START ADDRESS (PROGn_MPSAR)	END ADDRESS (PROGn_MPEAR)	MEMORY PAGE PROTECTION ATTRIBUTE (PROGn_MPPA)	MEMORY PROTECTION
PROG0	0x02A0_0000	0x02A1_FFFF	0x03FF_FCA4	Queue Manager subsystem configuration
PROG1	0x02A2_0000	0x02A3_FFFF	0x000F_FCB6	
PROG2	0x02A4_0000	0x02A5_FFFF	0x000F_FCB6	
PROG3	0x02A6_0000	0x02A6_7FFF	0x03FF_FCB4	
PROG4	0x02A6_8000	0x02A6_8FFF	0x03FF_FCB4	
PROG5	0x02A6_9000	0x02A6_9FFF	0x03FF_FCB4	
PROG6	0x02A6_A000	0x02A6_AFFF	0x03FF_FCB4	
PROG7	0x02A6_B000	0x02A6_BFFF	0x03FF_FCB4	
PROG8	0x02A6_C000	0x02A6_DFFF	0x03FF_FCB4	
PROG9	0x02A6_E000	0x02A6_FFFF	0x03FF_FCB4	
PROG10	0x02A8_0000	0x02A8_FFFF	0x03FF_FCA4	
PROG11	0x02A9_0000	0x02A9_FFFF	0x03FF_FCB4	
PROG12	0x02AA_0000	0x02AA_7FFF	0x03FF_FCB4	
PROG13	0x02AA_8000	0x02AA_FFFF	0x03FF_FCB4	
PROG14	0x02AB_0000	0x02AB_7FFF	0x03FF_FCB4	
PROG15	0x02AB_8000	0x02AB_FFFF	0x03FF_FCB6	

Table 6-51. Programmable Range *n* Registers Reset Values for MPU3

PROGRAMMABLE RANGE	MPU3 (SEMAPHORE)			
	START ADDRESS (PROGn_MPSAR)	END ADDRESS (PROGn_MPEAR)	MEMORY PAGE PROTECTION ATTRIBUTES (PROGn_MPPA)	MEMORY PROTECTION
PROG0	0x0264_0000	0x0264_07FF	0x0003_FCB6	Semaphore

Table 6-52. Programmable Range *n* Registers Reset Values for MPU4

PROGRAMMABLE RANGE	MPU4 (EMIF16)			
	START ADDRESS (PROGn_MPSAR)	END ADDRESS (PROGn_MPEAR)	MEMORY PAGE PROTECTION ATTRIBUTE (PROGn_MPPA)	MEMORY PROTECTION
PROG0	0x7000_0000	0x70FF_FFFF	0x03FF_FCB6	EMIF16 data
PROG1	0x7100_0000	0x71FF_FFFF	0x03FF_FCB6	
PROG2	0x7200_0000	0x72FF_FFFF	0x03FF_FCB6	
PROG3	0x7300_0000	0x73FF_FFFF	0x03FF_FCB6	
PROG4	0x7400_0000	0x74FF_FFFF	0x03FF_FCB6	
PROG5	0x7500_0000	0x75FF_FFFF	0x03FF_FCB6	
PROG6	0x7600_0000	0x76FF_FFFF	0x03FF_FCB6	
PROG7	0x7700_0000	0x77FF_FFFF	0x03FF_FCB6	
PROG8	0x7800_0000	0x78FF_FFFF	0x03FF_FCB6	
PROG9	0x7900_0000	0x79FF_FFFF	0x03FF_FCB6	
PROG10	0x7A00_0000	0x7AFF_FFFF	0x03FF_FCB6	
PROG11	0x7B00_0000	0x7BFF_FFFF	0x03FF_FCB6	
PROG12	0x7C00_0000	0x7CFF_FFFF	0x03FF_FCB6	
PROG13	0x7D00_0000	0x7DFF_FFFF	0x03FF_FCB6	
PROG14	0x7E00_0000	0x7EFF_FFFF	0x03FF_FCB6	
PROG15	0x7F00_0000	0x7FFF_FFFF	0x03FF_FCB6	

Copyright © 2012–2016, Texas Instruments Incorporated

6.11 DDR3 Memory Controller

The 32-bit DDR3 Memory Controller bus of the C665x is used to interface to JEDEC-standard-compliant DDR3 SDRAM devices. The DDR3 external bus interfaces only to DDR3 SDRAM devices; it does not share the bus with any other types of peripherals.

6.11.1 DDR3 Memory Controller Device-Specific Information

The C665x includes one 32-bit-wide 1.5-V DDR3 SDRAM EMIF interface. The DDR3 interface can operate at 800 Mega transfers per second (MTS), 1033 MTS, and 1333 MTS.

Due to the complicated nature of the interface, a limited number of topologies will be supported to provide a 16-bit or 32-bit interface.

The DDR3 electrical requirements are fully specified in the DDR Jedec Specification JESD79-3C. Standard DDR3 SDRAMs are available in 8- and 16-bit versions, allowing for the following bank topologies to be supported by the interface:

- 36-bit: Three 16-bit SDRAMs (including 4 bits of ECC)
- 36-bit: Five 8-bit SDRAMs (including 4 bits of ECC)
- 32-bit: Two 16-bit SDRAMs
- 32-bit: Four 8-bit SDRAMs
- 16-bit: One 16-bit SDRAM
- 16-bit: Two 8-bit SDRAM

The approach to specifying interface timing for the DDR3 memory bus is different than on other interfaces such as I^2C or SPI. For these other interfaces, the device timing was specified in terms of data manual specifications and I/O buffer information specification (IBIS) models. For the DDR3 memory bus, the approach is to specify compatible DDR3 devices and provide the printed circuit board (PCB) solution and guidelines directly to the user.

A race condition may exist when certain masters write data to the DDR3 memory controller. For example, if master A passes a software message through a buffer in external memory and does not wait for an indication that the write completes, before signaling to master B that the message is ready, when master B attempts to read the software message, then the master B read may bypass the master A write and, thus, master B may read stale data and, therefore, receive an incorrect message.

Some master peripherals (for example, EDMA3 transfer controllers with TCCMOD=0) will always wait for the write to complete before signaling an interrupt to the system, thus avoiding this race condition. For masters that do not have a hardware specification of write-read ordering, it may be necessary to specify data ordering through software.

If master A does not wait for indication that a write is complete, it must perform the following workaround:

1. Perform the required write to DDR3 memory space.
2. Perform a dummy write to the DDR3 memory controller module ID and revision register.
3. Perform a dummy read from the DDR3 memory controller module ID and revision register.
4. Indicate to master B that the data is ready to be read after completion of the read in Step 3. The completion of the read in Step 3 ensures that the previous write was done.

Copyright © 2012–2016, Texas Instruments Incorporated

6.12 I²C Peripheral

The inter-integrated circuit (I²C) module provides an interface between DSP and other devices compliant with Philips Semiconductors Inter-IC bus (I²C bus) specification version 2.1 and connected by way of an I²C bus. External components attached to this 2-wire serial bus can transmit/receive up to 8-bit data to/from the DSP through the I²C module.

6.12.1 I²C Device-Specific Information

The C665x device includes an I²C peripheral module.

NOTE

When using the I²C module, ensure there are external pullup resistors on the SDA and SCL pins.

The I²C modules on the C665x may be used by the DSP to control local peripheral ICs (DACs, ADCs, and so forth.) or may be used to communicate with other controllers in a system or to implement a user interface.

The I²C port is compatible with Philips I²C specification revision 2.1 (January 2000) and supports:

- Fast mode up to 400 Kbps (no fail-safe I/O buffers)
- Noise filter to remove noise 50 ns or less
- 7-bit and 10-bit device addressing modes
- Multimaster (transmit/receive) and slave (transmit/receive) functionality
- Events: DMA, interrupt, or polling
- Slew-rate limited open-drain output buffers

Figure 6-23 shows a block diagram of the I²C module.

Copyright © 2012–2016, Texas Instruments Incorporated

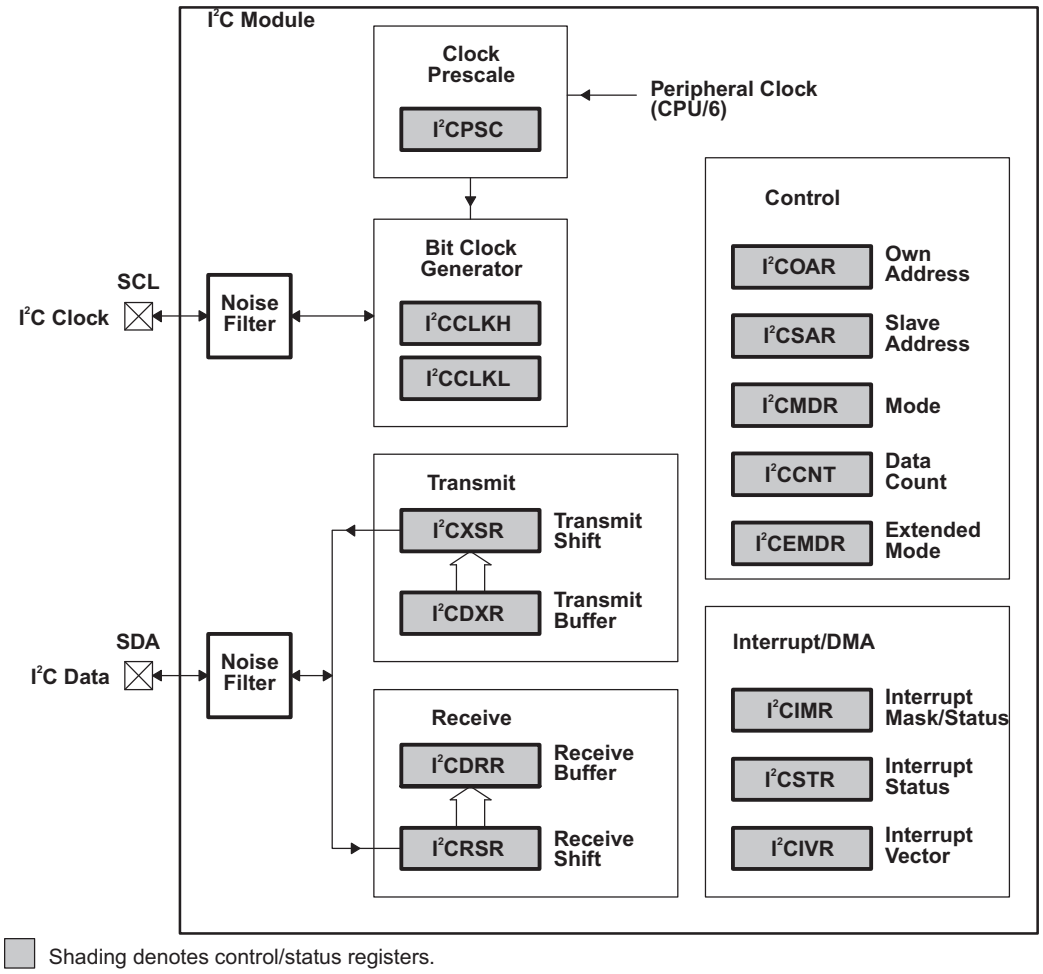

Figure 6-23. I²C Module Block Diagram

6.12.2 I²C Peripheral Register Description(s)

Table 6-53. I²C Registers

HEX ADDRESS RANGE	REGISTER	REGISTER NAME
0253 0000	ICOAR	I²C Own Address Register
0253 0004	ICIMR	I²C Interrupt Mask/Status Register
0253 0008	ICSTR	I²C Interrupt Status Register
0253 000C	ICCLKL	I²C Clock Low-Time Divider Register
0253 0010	ICCLKH	I²C Clock High-Time Divider Register
0253 0014	ICCNT	I²C Data Count Register
0253 0018	ICDRR	I²C Data Receive Register
0253 001C	ICSAR	I²C Slave Address Register
0253 0020	ICDXR	I²C Data Transmit Register
0253 0024	ICMDR	I²C Mode Register
0253 0028	ICIVR	I²C Interrupt Vector Register
0253 002C	ICEMDR	I²C Extended Mode Register
0253 0030	ICPSC	I²C Prescaler Register
0253 0034	ICPID1	I²C Peripheral Identification Register 1 [Value: 0x0000 0105]
0253 0038	ICPID2	I²C Peripheral Identification Register 2 [Value: 0x0000 0005]
0253 003C - 0253 007F	-	Reserved

6.13 HyperLink Peripheral

The devices include the HyperLink bus for companion chip/die interfaces. This is a 4-lane SerDes interface designed to operate at up to 10 Gbaud per lane. The supported data rates include 1.25 Gbaud, 3.125 Gbaud, 6.25 Gbaud, and 10 Gbaud. The interface is used to connect with external accelerators. The HyperLink links must be connected with DC coupling.

The interface includes the Serial Station Management Interfaces used to send power management and flow messages between devices. This consists of four LVCMOS inputs and four LVCMOS outputs configured as two 2-wire output buses and two 2-wire input buses. Each 2-wire bus includes a data signal and a clock signal.

6.13.1 HyperLink Device-Specific Interrupt Event

The HyperLink has 64 input events. Events 0 to 31 come from the chip-level interrupt controller and events 32 to 63 are from queue-pending signals from the Queue Manager to monitor some of the transmission queue status.

Table 6-54. HyperLink Events

EVENT NUMBER	EVENT	EVENT DESCRIPTION
0	CIC2_OUT8	Interrupt Controller output
1	CIC2_OUT9	Interrupt Controller output
2	CIC2_OUT10	Interrupt Controller output
3	CIC2_OUT11	Interrupt Controller output
4	CIC2_OUT12	Interrupt Controller output
5	CIC2_OUT13	Interrupt Controller output
6	CIC2_OUT14	Interrupt Controller output
7	CIC2_OUT15	Interrupt Controller output
8	CIC2_OUT16	Interrupt Controller output
9	CIC2_OUT17	Interrupt Controller output
10	CIC2_OUT18	Interrupt Controller output

Copyright © 2012–2016, Texas Instruments Incorporated

Table 6-54. HyperLink Events (continued)

EVENT NUMBER	EVENT	EVENT DESCRIPTION
11	CIC2_OUT19	Interrupt Controller output
12	CIC2_OUT20	Interrupt Controller output
13	CIC2_OUT21	Interrupt Controller output
14	CIC2_OUT22	Interrupt Controller output
15	CIC2_OUT23	Interrupt Controller output
16	CIC2_OUT24	Interrupt Controller output
17	CIC2_OUT25	Interrupt Controller output
18	CIC2_OUT26	Interrupt Controller output
19	CIC2_OUT27	Interrupt Controller output
20	CIC2_OUT28	Interrupt Controller output
21	CIC2_OUT29	Interrupt Controller output
22	CIC2_OUT30	Interrupt Controller output
23	CIC2_OUT31	Interrupt Controller output
24	CIC2_OUT32	Interrupt Controller output
25	CIC2_OUT33	Interrupt Controller output
26	CIC2_OUT34	Interrupt Controller output
27	CIC2_OUT35	Interrupt Controller output
28	CIC2_OUT36	Interrupt Controller output
29	CIC2_OUT37	Interrupt Controller output
30	CIC2_OUT38	Interrupt Controller output
31	CIC2_OUT39	Interrupt Controller output
32	QM_INT_PEND_864	Queue manager pend event
33	QM_INT_PEND_865	Queue manager pend event
34	QM_INT_PEND_866	Queue manager pend event
35	QM_INT_PEND_867	Queue manager pend event
36	QM_INT_PEND_868	Queue manager pend event
37	QM_INT_PEND_869	Queue manager pend event
38	QM_INT_PEND_870	Queue manager pend event
39	QM_INT_PEND_871	Queue manager pend event
40	QM_INT_PEND_872	Queue manager pend event
41	QM_INT_PEND_873	Queue manager pend event
42	QM_INT_PEND_874	Queue manager pend event
43	QM_INT_PEND_875	Queue manager pend event
44	QM_INT_PEND_876	Queue manager pend event
45	QM_INT_PEND_877	Queue manager pend event
46	QM_INT_PEND_878	Queue manager pend event
47	QM_INT_PEND_879	Queue manager pend event
48	QM_INT_PEND_880	Queue manager pend event
49	QM_INT_PEND_881	Queue manager pend event
50	QM_INT_PEND_882	Queue manager pend event
51	QM_INT_PEND_883	Queue manager pend event
52	QM_INT_PEND_884	Queue manager pend event
53	QM_INT_PEND_885	Queue manager pend event
54	QM_INT_PEND_886	Queue manager pend event
55	QM_INT_PEND_887	Queue manager pend event
56	QM_INT_PEND_888	Queue manager pend event
57	QM_INT_PEND_889	Queue manager pend event

Copyright © 2012–2016, Texas Instruments Incorporated

Table 6-54. HyperLink Events (continued)

EVENT NUMBER	EVENT	EVENT DESCRIPTION
58	QM_INT_PEND_890	Queue manager pend event
59	QM_INT_PEND_891	Queue manager pend event
60	QM_INT_PEND_892	Queue manager pend event
61	QM_INT_PEND_893	Queue manager pend event
62	QM_INT_PEND_894	Queue manager pend event
63	QM_INT_PEND_895	Queue manager pend event

6.14 PCIe Peripheral

The 2-lane PCI express (PCIe) module on the device provides an interface between the DSP and other PCIe-compliant devices. The PCI Express module provides low-pin-count, high-reliability, and high-speed data transfer at rates of 5.0 GBaud per lane on the serial links. For more information, see the Peripheral Component Interconnect Express (PCIe) for KeyStone Devices User's Guide. The PCIe electrical requirements are fully specified in the PCI Express Base Specification Revision 2.0 of PCI-SIG. TI has performed the simulation and system characterization to ensure all PCIe interface timings in this solution are met; therefore, no electrical data/timing information is supplied here for this interface.

Copyright © 2012–2016, Texas Instruments Incorporated

6.15 Ethernet Media Access Controller (EMAC)

The Ethernet media access controller (EMAC) module provides an efficient interface between the C665x DSP core processor and the networked community. The EMAC supports 10Base-T (10 Mbps), and 100BaseTX (100 Mbps), in half- or full-duplex mode, and 1000BaseT (1000 Mbps) in full-duplex mode, with hardware flow control and quality-of-service (QOS) support.

The EMAC module conforms to the IEEE 802.3-2002 standard, describing the *Carrier Sense Multiple Access with Collision Detection (CSMA/CD) Access Method and Physical Layer* specifications. The IEEE 802.3 standard has also been adopted by ISO/IEC and redesignated as ISO/IEC 8802-3:2000(E).

Deviating from this standard, the EMAC module does not use the transmit coding error signal MTXER. Instead of driving the error pin when an underflow condition occurs on a transmitted frame, the EMAC will intentionally generate an incorrect checksum by inverting the frame CRC, so that the transmitted frame will be detected as an error by the network.

The EMAC control module is the main interface between the device core processor, the MDIO module, and the EMAC module. The relationship between these three components is shown in Figure 6-24. The EMAC control module contains the necessary components to allow the EMAC to make efficient use of device memory, plus it controls device interrupts. The EMAC control module incorporates 8KB of internal RAM to hold EMAC buffer descriptors.

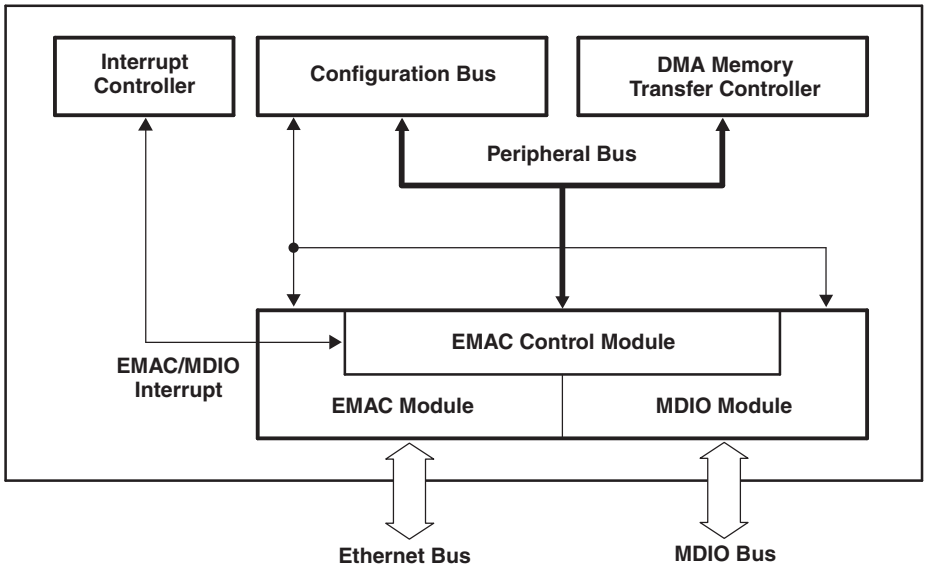

Figure 6-24. EMAC, MDIO, and EMAC Control Modules

For more detailed information on the EMAC/MDIO, see Gigabit Ethernet (GbE) Subsystem for KeyStone Devices User's Guide.

6.15.1 EMAC Device-Specific Information

The EMAC module on the device supports Serial Gigabit Media Independent Interface (SGMII). The SGMII interface conforms to version 1.8 of the industry standard specification.

Copyright © 2012–2016, Texas Instruments Incorporated

6.15.2 EMAC Peripheral Register Description(s)

The memory maps of the EMAC are shown in Table 6-55 through Table 6-60.

Table 6-55. Ethernet MAC (EMAC) Control Registers

HEX ADDRESS	ACRONYM	REGISTER NAME
02C0 8000	TXIDVER	Transmit Identification and Version Register
02C0 8004	TXCONTROL	Transmit Control Register
02C0 8008	TXTEARDOWN	Transmit Teardown register
02C0 800F	-	Reserved
02C0 8010	RXIDVER	Receive Identification and Version Register
02C0 8014	RXCONTROL	Receive Control Register
02C0 8018	RXTEARDOWN	Receive Teardown Register
02C0 801C	-	Reserved
02C0 8020 - 02C0 807C	-	Reserved
02C0 8080	TXINTSTATRAW	Transmit Interrupt Status (Unmasked) Register
02C0 8084	TXINTSTATMASKED	Transmit Interrupt Status (Masked) Register
02C0 8088	TXINTMASKSET	Transmit Interrupt Mask Set Register
02C0 808C	TXINTMASKCLEAR	Transmit Interrupt Mask Clear Register
02C0 8090	MACINVECTOR	MAC Input Vector Register
02C0 8094	MACEOIVECTOR	MAC End of Interrupt Vector Register
02C0 8098 - 02C0 819C	-	Reserved
02C0 80A0	RXINTSTATRAW	Receive Interrupt Status (Unmasked) Register
02C0 80A4	RXINTSTATMASKED	Receive Interrupt Status (Masked) Register
02C0 80A8	RXINTMASKSET	Receive Interrupt Mask Set Register
02C0 80AC	RXINTMASKCLEAR	Receive Interrupt Mask Clear Register
02C0 80B0	MACINTSTATRAW	MAC Interrupt Status (Unmasked) Register
02C0 80B4	MACINTSTATMASKED	MAC Interrupt Status (Masked) Register
02C0 80B8	MACINTMASKSET	MAC Interrupt Mask Set Register
02C0 80BC	MACINTMASKCLEAR	MAC Interrupt Mask Clear Register
02C0 80C0 - 02C0 80FC	-	Reserved
02C0 8100	RXMBPENABLE	Receive Multicast/Broadcast/Promiscuous Channel Enable Register
02C0 8104	RXUNICASTSET	Receive Unicast Enable Set Register
02C0 8108	RXUNICASTCLEAR	Receive Unicast Clear Register
02C0 810C	RXMAXLEN	Receive Maximum Length Register
02C0 8110	RXBUFFEROFFSET	Receive Buffer Offset Register
02C0 8114	RXFILTERLOWTHRESH	Receive Filter Low Priority Frame Threshold Register
02C0 8118 - 02C0 811C	-	Reserved
02C0 8120	RX0FLOWTHRESH	Receive Channel 0 Flow Control Threshold Register
02C0 8124	RX1FLOWTHRESH	Receive Channel 1 Flow Control Threshold Register
02C0 8128	RX2FLOWTHRESH	Receive Channel 2 Flow Control Threshold Register
02C0 812C	RX3FLOWTHRESH	Receive Channel 3 Flow Control Threshold Register
02C0 8130	RX4FLOWTHRESH	Receive Channel 4 Flow Control Threshold Register
02C0 8134	RX5FLOWTHRESH	Receive Channel 5 Flow Control Threshold Register
02C0 8138	RX6FLOWTHRESH	Receive Channel 6 Flow Control Threshold Register
02C0 813C	RX7FLOWTHRESH	Receive Channel 7 Flow Control Threshold Register
02C0 8140	RX0FREEBUFFER	Receive Channel 0 Free Buffer Count Register
02C0 8144	RX1FREEBUFFER	Receive Channel 1 Free Buffer Count Register
02C0 8148	RX2FREEBUFFER	Receive Channel 2 Free Buffer Count Register
02C0 814C	RX3FREEBUFFER	Receive Channel 3 Free Buffer Count Register

Copyright © 2012–2016, Texas Instruments Incorporated

Table 6-55. Ethernet MAC (EMAC) Control Registers (continued)

HEX ADDRESS	ACRONYM	REGISTER NAME
02C0 8150	RX4FREEBUFFER	Receive Channel 4 Free Buffer Count Register
02C0 8154	RX5FREEBUFFER	Receive Channel 5 Free Buffer Count Register
02C0 8158	RX6FREEBUFFER	Receive Channel 6 Free Buffer Count Register
02C0 815C	RX7FREEBUFFER	Receive Channel 7 Free Buffer Count Register
02C0 8160	MACCONTROL	MAC Control Register
02C0 8164	MACSTATUS	MAC Status Register
02C0 8168	EMCONTROL	Emulation Control Register
02C0 816C	FIFOCONTROL	FIFO Control Register
02C0 8170	MACCONFIG	MAC Configuration Register
02C0 8174	SOFTRESET	Soft Reset Register
02C0 81D0	MACSRCADDRLO	MAC Source Address Low Bytes Register
02C0 81D4	MACSRCADDRHI	MAC Source Address High Bytes Register
02C0 81D8	MACHASH1	MAC Hash Address Register 1
02C0 81DC	MACHASH2	MAC Hash Address Register 2
02C0 81E0	BOFFTEST	Back Off Test Register
02C0 81E4	TPACETEST	Transmit Pacing Algorithm Test Register
02C0 81E8	RXPAUSE	Receive Pause Timer Register
02C0 81EC	TXPAUSE	Transmit Pause Timer Register
02C0 8200 - 02C0 82FC	-	See Table 6-56.
02C0 8300 - 02C0 84FC	-	Reserved
02C0 8500	MACADDRLO	MAC Address Low Bytes Register (used in Receive Address Matching)
02C0 8504	MACADDRHI	MAC Address High Bytes Register (used in Receive Address Matching)
02C0 8508	MACINDEX	MAC Index Register
02C0 850C - 02C0 85FC	-	Reserved
02C0 8600	TX0HDP	Transmit Channel 0 DMA Head Descriptor Pointer Register
02C0 8604	TX1HDP	Transmit Channel 1 DMA Head Descriptor Pointer Register
02C0 8608	TX2HDP	Transmit Channel 2 DMA Head Descriptor Pointer Register
02C0 860C	TX3HDP	Transmit Channel 3 DMA Head Descriptor Pointer Register
02C0 8610	TX4HDP	Transmit Channel 4 DMA Head Descriptor Pointer Register
02C0 8614	TX5HDP	Transmit Channel 5 DMA Head Descriptor Pointer Register
02C0 8618	TX6HDP	Transmit Channel 6 DMA Head Descriptor Pointer Register
02C0 861C	TX7HDP	Transmit Channel 7 DMA Head Descriptor Pointer Register
02C0 8620	RX0HDP	Receive Channel 0 DMA Head Descriptor Pointer Register
02C0 8624	RX1HDP	Receive t Channel 1 DMA Head Descriptor Pointer Register
02C0 8628	RX2HDP	Receive Channel 2 DMA Head Descriptor Pointer Register
02C0 862C	RX3HDP	Receive t Channel 3 DMA Head Descriptor Pointer Register
02C0 8630	RX4HDP	Receive Channel 4 DMA Head Descriptor Pointer Register
02C0 8634	RX5HDP	Receive t Channel 5 DMA Head Descriptor Pointer Register
02C0 8638	RX6HDP	Receive Channel 6 DMA Head Descriptor Pointer Register
02C0 863C	RX7HDP	Receive t Channel 7 DMA Head Descriptor Pointer Register
02C0 8640	TX0CP	Transmit Channel 0 Completion Pointer (Interrupt Acknowledge) Register
02C0 8644	TX1CP	Transmit Channel 1 Completion Pointer (Interrupt Acknowledge) Register
02C0 8648	TX2CP	Transmit Channel 2 Completion Pointer (Interrupt Acknowledge) Register
02C0 864C	TX3CP	Transmit Channel 3 Completion Pointer (Interrupt Acknowledge) Register
02C0 8650	TX4CP	Transmit Channel 4 Completion Pointer (Interrupt Acknowledge) Register
02C0 8654	TX5CP	Transmit Channel 5 Completion Pointer (Interrupt Acknowledge) Register
02C0 8658	TX6CP	Transmit Channel 6 Completion Pointer (Interrupt Acknowledge) Register

Copyright © 2012–2016, Texas Instruments Incorporated

Table 6-55. Ethernet MAC (EMAC) Control Registers (continued)

HEX ADDRESS	ACRONYM	REGISTER NAME
02C0 865C	TX7CP	Transmit Channel 7 Completion Pointer (Interrupt Acknowledge) Register
02C0 8660	RX0CP	Receive Channel 0 Completion Pointer (Interrupt Acknowledge) Register
02C0 8664	RX1CP	Receive Channel 1 Completion Pointer (Interrupt Acknowledge) Register
02C0 8668	RX2CP	Receive Channel 2 Completion Pointer (Interrupt Acknowledge) Register
02C0 866C	RX3CP	Receive Channel 3 Completion Pointer (Interrupt Acknowledge) Register
02C0 8670	RX4CP	Receive Channel 4 Completion Pointer (Interrupt Acknowledge) Register
02C0 8674	RX5CP	Receive Channel 5 Completion Pointer (Interrupt Acknowledge) Register
02C0 8678	RX6CP	Receive Channel 6 Completion Pointer (Interrupt Acknowledge) Register
02C0 867C	RX7CP	Receive Channel 7 Completion Pointer (Interrupt Acknowledge) Register
02C0 8680 - 02C0 86FC	-	Reserved
02C0 8700 - 02C0 877C	-	Reserved
02C0 8780 - 02C0 8FFF	-	Reserved

Table 6-56. EMAC Statistics Registers

HEX ADDRESS	ACRONYM	REGISTER NAME
02C0 8200	RXGOODFRAMES	Good Receive Frames Register
02C0 8204	RXBCASTFRAMES	Broadcast Receive Frames Register (Total number of Good Broadcast Frames Receive)
02C0 8208	RXMCASTFRAMES	Multicast Receive Frames Register (Total number of Good Multicast Frames Received)
02C0 820C	RXPAUSEFRAMES	Pause Receive Frames Register
02C0 8210	RXCRCERRORS	Receive CRC Errors Register (Total number of Frames Received with CRC Errors)
02C0 8214	RXALIGNCODEERRORS	Receive Alignment/Code Errors register (Total number of frames received with alignment/code errors)
02C0 8218	RXOVERSIZED	Receive Oversized Frames Register (Total number of Oversized Frames Received)
02C0 821C	RXJABBER	Receive Jabber Frames Register (Total number of Jabber Frames Received)
02C0 8220	RXUNDERSIZED	Receive Undersized Frames Register (Total number of Undersized Frames Received)
02C0 8224	RXFRAGMENTS	Receive Frame Fragments Register
02C0 8228	RXFILTERED	Filtered Receive Frames Register
02C0 822C	RXQOSFILTERERED	Received QOS Filtered Frames Register
02C0 8230	RXOCTETS	Receive Octet Frames Register (Total number of Received Bytes in Good Frames)
02C0 8234	TXGOODFRAMES	Good Transmit Frames Register (Total number of Good Frames Transmitted)
02C0 8238	TXBCASTFRAMES	Broadcast Transmit Frames Register
02C0 823C	TXMCASTFRAMES	Multicast Transmit Frames Register
02C0 8240	TXPAUSEFRAMES	Pause Transmit Frames Register
02C0 8244	TXDEFERED	Deferred Transmit Frames Register
02C0 8248	TXCOLLISION	Transmit Collision Frames Register
02C0 824C	TXSINGLECOLL	Transmit Single Collision Frames Register
02C0 8250	TXMULTICOLL	Transmit Multiple Collision Frames Register
02C0 8254	TXEXCESSIVECOLL	Transmit Excessive Collision Frames Register
02C0 8258	TXLATECOLL	Transmit Late Collision Frames Register
02C0 825C	TXUNDERRUN	Transmit Under Run Error Register
02C0 8260	TXCARRIERSENSE	Transmit Carrier Sense Errors Register
02C0 8264	TXOCTETS	Transmit Octet Frames Register
02C0 8268	FRAME64	Transmit and Receive 64 Octet Frames Register

Copyright © 2012–2016, Texas Instruments Incorporated

Table 6-56. EMAC Statistics Registers (continued)

HEX ADDRESS	ACRONYM	REGISTER NAME
02C0 826C	FRAME65T127	Transmit and Receive 65 to 127 Octet Frames Register
02C0 8270	FRAME128T255	Transmit and Receive 128 to 255 Octet Frames Register
02C0 8274	FRAME256T511	Transmit and Receive 256 to 511 Octet Frames Register
02C0 8278	FRAME512T1023	Transmit and Receive 512 to 1023 Octet Frames Register
02C0 827C	FRAME1024TUP	Transmit and Receive 1024 to 1518 Octet Frames Register
02C0 8280	NETOCTETS	Network Octet Frames Register
02C0 8284	RXSOFOVERRUNS	Receive FIFO or DMA Start of Frame Overruns Register
02C0 8288	RXMOFOVERRUNS	Receive FIFO or DMA Middle of Frame Overruns Register
02C0 828C	RXDMAOVERRUNS	Receive DMA Start of Frame and Middle of Frame Overruns Register
02C0 8290 - 02C0 82FC	-	Reserved

Table 6-57. EMAC Descriptor Memory

HEX ADDRESS	ACRONYM	REGISTER NAME
02C0 A000 - 02C0 BFFF	-	EMAC Descriptor Memory

Table 6-58. SGMII Control Registers

HEX ADDRESS	ACRONYM	REGISTER NAME
02C0 8900	IDVER	Identification and Version register
02C0 8904	SOFT_RESET	Software Reset Register
02C0 8910	CONTROL	Control Register
02C0 8914	STATUS	Status Register
02C0 8918	MR_ADV_ABILITY	Advertised Ability Register
02C0 891C	-	Reserved
02C0 8920	MR_LP_ADV_ABILITY	Link Partner Advertised Ability Register
02C0 8924 - 02C0 8948	-	Reserved

Copyright © 2012–2016, Texas Instruments Incorporated

Table 6-59. EMIC Control Registers

HEX ADDRESS	ACRONYM	REGISTER NAME
02C0 8A00	IDVER	Identification and Version register
02C0 8A04	SOFT_RESET	Software Reset Register
02C0 8A08	EM_CONTROL	Emulation Control Register
02C0 8A0C	INT_CONTROL	Interrupt Control Register
02C0 8A10	C0_RX_THRESH_EN	Receive Threshold Interrupt Enable Register for CorePac0
02C0 8A14	C0_RX_EN	Receive Interrupt Enable Register for CorePac0
02C0 8A18	C0_TX_EN	Transmit Interrupt Enable Register for CorePac0
02C0 8A1C	C0_MISC_EN	Misc Interrupt Enable Register for CorePac0
02C0 8A10	C1_RX_THRESH_EN	Receive Threshold Interrupt Enable Register for CorePac1 (C6657 only)
02C0 8A14	C1_RX_EN	Receive Interrupt Enable Register for CorePac1 (C6657 only)
02C0 8A18	C1_TX_EN	Transmit Interrupt Enable Register for CorePac1 (C6657 only)
02C0 8A1C	C1_MISC_EN	Misc Interrupt Enable Register for CorePac1 (C6657 only)
02C0 8A90	C0_RX_THRESH_STAT	Receive Threshold Masked Interrupt Status Register for CorePac0
02C0 8A94	C0_RX_STAT	Receive Interrupt Masked Interrupt Status Register for CorePac0
02C0 8A98	C0_TX_STAT	Transmit Interrupt Masked Interrupt Status Register for CorePac0
02C0 8A9C	C0_MISC_STAT	Misc Interrupt Masked Interrupt Status Register for CorePac0
02C0 8AA0	C1_RX_THRESH_STAT	Receive Threshold Masked Interrupt Status Register for CorePac1 (C6657 only)
02C0 8AA4	C1_RX_STAT	Receive Interrupt Masked Interrupt Status Register for CorePac1 (C6657 only)
02C0 8AA8	C1_TX_STAT	Transmit Interrupt Masked Interrupt Status Register for CorePac1 (C6657 only)
02C0 8AAC	C1_MISC_STAT	Misc Interrupt Masked Interrupt Status Register for CorePac1 (C6657 only)
02C0 8B10	C0_RX_IMAX	Receive Interrupts Per Millisecond for CorePac0
02C0 8B14	C0_TX_IMAX	Transmit Interrupts Per Millisecond for CorePac0
02C0 8B18	C1_RX_IMAX	Receive Interrupts Per Millisecond for CorePac1 (C6657 only)
02C0 8B1C	C1_TX_IMAX	Transmit Interrupts Per Millisecond for CorePac1 (C6657 only)

6.15.3 EMAC Electrical Data/Timing (SGMII)

The Hardware Design Guide for KeyStone Devices specifies a complete EMAC and SGMII interface solution for the C665x as well as a list of compatible EMAC and SGMII devices. TI has performed the simulation and system characterization to ensure all EMAC and SGMII interface timings in this solution are met; therefore, no electrical data/timing information is supplied here for this interface.

NOTE

TI supports only designs that follow the board design guidelines outlined in the application report.

Copyright © 2012–2016, Texas Instruments Incorporated

6.16 Management Data Input/Output (MDIO)

The management data input/output (MDIO) module implements the 802.3 serial management interface to interrogate and control up to 32 Ethernet PHY(s) connected to the device, using a shared 2-wire bus. Application software uses the MDIO module to configure the auto-negotiation parameters of each PHY attached to the GbE switch subsystem, retrieve the negotiation results, and configure required parameters in the GbE switch subsystem module for correct operation. The module is designed to allow almost transparent operation of the MDIO interface, with very little maintenance from the core processor. For more information, see the Gigabit Ethernet (GbE) Subsystem for KeyStone Devices User's Guide.

The EMAC control module is the main interface between the device core processor, the MDIO module, and the EMAC module. The relationship between these three components is shown in Figure 6-24.

For more detailed information on the EMAC/MDIO, see Gigabit Ethernet (GbE) Subsystem for KeyStone Devices User's Guide.

6.16.1 MDIO Peripheral Registers

The memory map of the MDIO is shown in Table 6-60.

Table 6-60. MDIO Registers

HEX ADDRESS	ACRONYM	REGISTER NAME
02C0 8800	VERSION	MDIO Version Register
02C0 8804	CONTROL	MDIO Control Register
02C0 8808	ALIVE	MDIO PHY Alive Status Register
02C0 880C	LINK	MDIO PHY Link Status Register
02C0 8810	LINKINTRAW	MDIO link Status Change Interrupt (unmasked) Register
02C0 8814	LINKINTMASKED	MDIO link Status Change Interrupt (masked) Register
02C0 8818 - 02C0 881C	-	Reserved
02C0 8820	USERINTRAW	MDIO User Command Complete Interrupt (Unmasked) Register
02C0 8824	USERINTMASKED	MDIO User Command Complete Interrupt (Masked) Register
02C0 8828	USERINTMASKSET	MDIO User Command Complete Interrupt Mask Set Register
02C0 882C	USERINTMASKCLEAR	MDIO User Command Complete Interrupt Mask Clear Register
02C0 8830 - 02C0 887C	-	Reserved
02C0 8880	USERACCESS0	MDIO User Access Register 0
02C0 8884	USERPHYSEL0	MDIO User PHY Select Register 0
02C0 8888	USERACCESS1	MDIO User Access Register 1
02C0 888C	USERPHYSEL1	MDIO User PHY Select Register 1
02C0 8890 - 02C0 8FFF	-	Reserved

Copyright © 2012–2016, Texas Instruments Incorporated

6.17 Timers

The timers can be used to: time events, count events, generate pulses, interrupt the CPU and send synchronization events to the EDMA3 channel controller.

6.17.1 Timers Device-Specific Information

The C665x devices have eight (C6657) or seven (C6655) 64-bit timers in total. On the C6657, Timer0 and Timer1 are dedicated to each of the two CorePacs as a watchdog timer and can also be used as general-purpose timers. Each of the other six timers can also be configured as a general-purpose timer only, with each timer programmed as a 64-bit timer or as two separate 32-bit timers. On the C6655, Timer0 is dedicated to the CorePac as a watchdog timer and can also be used as a general-purpose timer. Each of the other six timers can also be configured as a general-purpose timer only, programmed as a 64-bit timer or as two separate 32-bit timers.

When operating in 64-bit mode, the timer counts either VBUS clock cycles or input (TINPLx) pulses (rising edge) and generates an output pulse/waveform (TOUTLx) plus an internal event (TINTLx) on a software-programmable period.

When operating in 32-bit mode, the timer is split into two independent 32-bit timers. Each timer is made up of two 32-bit counters: a high counter and a low counter. The timer pins, TINPLx and TOUTLx are connected to the low counter. The timer pins, TINPHx and TOUTHx are connected to the high counter.

When operating in watchdog mode, the timer counts down to 0 and generates an event. It is a requirement that software writes to the timer before the count expires, after which the count begins again. If the count ever reaches 0, the timer event output is asserted. Reset initiated by a watchdog timer can be set by programming Section 6.6.2.6 and the type of reset initiated can set by programming Section 6.6.2.8. For more information, see the 64-bit Timer (Timer 64) for KeyStone Devices User's Guide.

6.18 Semaphore2

The device contains an enhanced semaphore module for the management of shared resources of the DSP C66x CorePac. The semaphore enforces atomic accesses to shared chip-level resources so that the read-modify-write sequence is not broken. The semaphore module has a unique interrupt to the CorePac to identify when the core has acquired the resource.

Semaphore resources within the module are not tied to specific hardware resources. It is a software requirement to allocate semaphore resources to the hardware resource(s) to be arbitrated.

The semaphore module supports 8(C6655) or 2(C6657) masters and contains 32 semaphores to be used within the system.

The Semaphore module is accessible only by masters with privilege ID (privID) 0(C6655) or 0 to 1(C6657), which means only CorePac 0 (C6655) or 0 to 1(C6657) or the EDMA transactions initiated by CorePac 0(C6655) or 0 to 1(C6657) can access the Semaphore module.

There are two methods of accessing a semaphore resource:

- **Direct Access:** A core directly accesses a semaphore resource. If free, the semaphore will be granted. If not, the semaphore is not granted.
- **Indirect Access:** A core indirectly accesses a semaphore resource by writing it. Once it is free, an interrupt notifies the CPU that it is available.

Copyright © 2012–2016, Texas Instruments Incorporated

6.19 Multichannel Buffered Serial Port (McBSP)

The McBSP provides these functions:

- Full-duplex communication
- Double-buffered data registers, which allow a continuous data stream
- Independent framing and clocking for receive and transmit
- Direct interface to industry-standard codecs, analog interface chips (AICs), and other serially connected analog-to-digital (A/D) and digital-to-analog (D/A) devices
- External shift clock or an internal, programmable frequency shift clock for data transfer
- Transmit and receive FIFO buffers allow the McBSP to operate at a higher sample rate by making it more tolerant to DMA latency

If an internal clock source is used, the CLKGDV field of the Sample Rate Generator Register (SRGR) must always be set to a value of 1 or greater.

For more information, see the *Multichannel Buffered Serial Port (McBSP) for KeyStone Devices User's Guide*.

6.19.1 McBSP Peripheral Register

Table 6-61 describes the McBSP registers.

Table 6-61. McBSP/FIFO Registers

MCBSP0 BYTE ADDRESS	McBSP1 BYTE ADDRESS	ACRONYM	REGISTER DESCRIPTION
McBSP Registers			
0x021B 4000	0x021B 8000	DRR	McBSP Data Receive Register (read-only)
0x021B 4004	0x021B 8004	DXR	McBSP Data Transmit Register
0x021B 4008	0x021B 8008	SPCR	McBSP Serial Port Control Register
0x021B 400C	0x021B 800C	RCR	McBSP Receive Control Register
0x021B 4010	0x021B 8010	XCR	McBSP Transmit Control Register
0x021B 4014	0x021B 8014	SRGR	McBSP Sample Rate Generator register
0x021B 4018	0x021B 8018	MCR	McBSP Multichannel Control Register
0x021B 401C	0x021B 801C	RCERE0	McBSP Enhanced Receive Channel Enable Register 0 Partition A/B
0x021B 4020	0x021B 8020	XCERE0	McBSP Enhanced Transmit Channel Enable Register 0 Partition A/B
0x021B 4024	0x021B 8024	PCR	McBSP Pin Control Register
0x021B 4028	0x021B 8028	RCERE1	McBSP Enhanced Receive Channel Enable Register 1 Partition C/D
0x021B 402C	0x021B 802C	XCERE1	McBSP Enhanced Transmit Channel Enable Register 1 Partition C/D
0x021B 4030	0x021B 8030	RCERE2	McBSP Enhanced Receive Channel Enable Register 2 Partition E/F
0x021B 4034	0x021B 8034	XCERE2	McBSP Enhanced Transmit Channel Enable Register 2 Partition E/F
0x021B 4038	0x021B 8038	RCERE3	McBSP Enhanced Receive Channel Enable Register 3 Partition G/H
0x021B 403C	0x021B 803C	XCERE3	McBSP Enhanced Transmit Channel Enable Register 3 Partition G/H
McBSP FIFO Control and Status Registers			
0x021B 6000	0x021B A000	BFIFOREV	BFIFO Revision Identification Register
0x021B 6010	0x021B A010	WFIFOCTL	Write FIFO Control Register
0x021B 6014	0x021B A014	WFIFOSTS	Write FIFO Status Register
0x021B 6018	0x021B A018	RFIFOCTL	Read FIFO Control Register
0x021B 601C	0x021B A01C	RFIFOSTS	Read FIFO Status Register
McBSP FIFO Data Registers			
0x2200 0000	0x2240 0000	RBUF	McBSP FIFO Receive Buffer
0x2200 0000	0x2240 0000	XBUF	McBSP FIFO Transmit Buffer

Copyright © 2012–2016, Texas Instruments Incorporated

6.20 Universal Parallel Port (uPP)

The universal parallel port (uPP) peripheral is a multichannel, high-speed parallel interface with dedicated data lines and minimal control signals. It is designed to interface cleanly with high-speed analog-to-digital converters (ADCs) or digital-to-analog converters (DACs) with up to 16-bits of data width (per channel). It may also be interconnected with field-programmable gate arrays (FPGAs) or other uPP devices to achieve high-speed digital data transfer. It can operate in receive mode, transmit mode, or duplex mode, in which its individual channels operate in opposite directions.

The uPP peripheral includes an internal DMA controller to maximize throughput and minimize CPU overhead during high-speed data transmission. All uPP transactions use the internal DMA to provide data to or retrieve data from the I/O channels. The DMA controller includes two DMA channels, which typically service separate I/O channels. The uPP peripheral also supports data interleave mode, in which all DMA resources service a single I/O channel. In this mode, only one I/O channel may be used.

The features of the uPP include:

- Programmable data width per channel (from 8 bits to 16 bits inclusive)
- Programmable data justification
  - Right-justify with 0 extend
  - Right-justify with sign extend
  - Left-justify with 0 fill
- Supports multiplexing of interleaved data during SDR transmit
- Optional frame Start signal with programmable polarity
- Optional data ENABLE signal with programmable polarity
- Optional synchronization WAIT signal with programmable polarity
- Single Data Rate (SDR) or Double Data Rate (DDR, interleaved) interface
  - Supports multiplexing of interleaved data during SDR transmit
  - Supports demultiplexing and multiplexing of interleaved data during DDR transfers

For more information, see the *Universal Parallel Port (uPP) for KeyStone Devices User's Guide*.

Copyright © 2012–2016, Texas Instruments Incorporated

6.20.1 uPP Register Descriptions

Table 6-62. Universal Parallel Port (uPP) Registers

BYTE ADDRESS	ACRONYM	REGISTER DESCRIPTION
0x0258 0000	UPPID	uPP Peripheral Identification Register
0x0258 0004	UPPCR	uPP Peripheral Control Register
0x0258 0008	UPDLB	uPP Digital Loopback Register
0x0258 0010	UPCTL	uPP Channel Control Register
0x0258 0014	UPICR	uPP Interface Configuration Register
0x0258 0018	UPIVR	uPP Interface Idle Value Register
0x0258 001C	UPTCR	uPP Threshold Configuration Register
0x0258 0020	UPISR	uPP Interrupt Raw Status Register
0x0258 0024	UPIER	uPP Interrupt Enabled Status Register
0x0258 0028	UPIES	uPP Interrupt Enable Set Register
0x0258 002C	UPIEC	uPP Interrupt Enable Clear Register
0x0258 0030	UPEOI	uPP End-of-Interrupt Register
0x0258 0040	UPID0	uPP DMA Channel I Descriptor 0 Register
0x0258 0044	UPID1	uPP DMA Channel I Descriptor 1 Register
0x0258 0048	UPID2	uPP DMA Channel I Descriptor 2 Register
0x0258 0050	UPIS0	uPP DMA Channel I Status 0 Register
0x0258 0054	UPIS1	uPP DMA Channel I Status 1 Register
0x0258 0058	UPIS2	uPP DMA Channel I Status 2 Register
0x0258 0060	UPQD0	uPP DMA Channel Q Descriptor 0 Register
0x0258 0064	UPQD1	uPP DMA Channel Q Descriptor 1 Register
0x0258 0068	UPQD2	uPP DMA Channel Q Descriptor 2 Register
0x0258 0070	UPQS0	uPP DMA Channel Q Status 0 Register
0x0258 0074	UPQS1	uPP DMA Channel Q Status 1 Register
0x0258 0078	UPQS2	uPP DMA Channel Q Status 2 Register

6.21 Serial RapidIO (SRIO) Port

The SRIO port is a high-performance, low pin-count interconnect aimed for embedded markets. The use of the RapidIO interconnect in a baseband board design can create a homogeneous interconnect environment, providing even more connectivity and control among the components. RapidIO is based on the memory and device addressing concepts of processor buses where the transaction processing is managed completely by hardware. This enables the RapidIO interconnect to lower the system cost by providing lower latency, reduced overhead of packet data processing, and higher system bandwidth, all of which are key for wireless interfaces. For more information, see the *Serial RapidIO (SRIO) for KeyStone Devices User's Guide* in Section 10.3.

Copyright © 2012–2016, Texas Instruments Incorporated

6.22 Turbo Decoder Coprocessor (TCP3d)

The C6655 and C6657 have one high-performance embedded Turbo-Decoder Coprocessor (TCP3d) that significantly speeds up channel-decoding operations on-chip for WCDMA, HSPA, HSPA+, TD-SCDMA, LTE, and WiMAX. Operating at CPU clock divided-by-2, the TCP3d is capable of processing data channels at a throughput of >100 Mbps. For more information, see the *Turbo Decoder Coprocessor 3 (TCP3d) for KeyStone Devices User's Guide* in Section 10.3.

6.23 Enhanced Viterbi-Decoder Coprocessor (VCP2)

The devices have two high-performance embedded Viterbi Decoder Coprocessors (VCP2) that significantly speed up channel-decoding operations on-chip. Each VCP2, operating at CPU clock divided-by-3, can decode more than 694 7.95-Kbps adaptive multi-rate (AMR) [K = 9, R = 1/3] voice channels. The VCP2 supports constraint lengths K = 5, 6, 7, 8, and 9, rates R = 3/4, 1/2, 1/3, 1/4, and 1/5, and flexible polynomials, while generating hard decisions or soft decisions. Communications between the VCP2 and the CPU are carried out through the EDMA3 controller.

The VCP2 supports:

- Unlimited frame sizes
- Code rates 3/4, 1/2, 1/3, 1/4, and 1/5
- Constraint lengths 5, 6, 7, 8, and 9
- Programmable encoder polynomials
- Programmable reliability and convergence lengths
- Hard and soft decoded decisions
- Tail and convergent modes
- Yamamoto logic
- Tail biting logic
- Various input and output FIFO lengths

For more information, see the *Viterbi Coprocessor (VCP2) for KeyStone Devices User's Guide* in Section 10.3.

6.24 Emulation Features and Capability

6.24.1 Advanced Event Triggering (AET)

The C665x device supports advanced event triggering (AET). This capability can be used to debug complex problems as well as understand performance characteristics of user applications. AET provides the following capabilities:

- **Hardware Program Breakpoints:** specify addresses or address ranges that can generate events such as halting the processor or triggering the trace capture.
- **Data Watchpoints:** specify data variable addresses, address ranges, or data values that can generate events such as halting the processor or triggering the trace capture.
- **Counters:** count the occurrence of an event or cycles for performance monitoring.
- **State Sequencing:** allows combinations of hardware program breakpoints and data watchpoints to precisely generate events for complex sequences.

For more information on AET, see the following documents in Section 10.3:

- Using Advanced Event Triggering to Find and Fix Intermittent Real-Time Bugs
- Using Advanced Event Triggering to Debug Real-Time Problems in High Speed Embedded Microprocessor Systems

Copyright © 2012–2016, Texas Instruments Incorporated

6.24.2 Trace

The C665x device supports trace. Trace is a debug technology that provides a detailed, historical account of application code execution, timing, and data accesses. Trace collects, compresses, and exports debug information for analysis. Trace works in real-time and does not impact the execution of the system.

For more information on board design guidelines for trace advanced emulation, see the *60-Pin Emulation Header Technical Reference*.

6.24.3 IEEE 1149.1 JTAG

The JTAG interface is used to support boundary scan and emulation of the device. The boundary scan supported allows for an asynchronous TRST and only the 5 baseline JTAG signals (for example, no EMU[1:0]) required for boundary scan. Most interfaces on the device follow the Boundary Scan Test Specification (IEEE1149.1), while all of the SerDes (SRIO and SGMII) support the AC-coupled net test defined in *AC-Coupled Net Test Specification* (IEEE1149.6).

It is expected that all compliant devices are connected through the same JTAG interface, in daisy-chain fashion, in accordance with the specification. The JTAG interface uses 1.8-V LVCMOS buffers, compliant with the *Power Supply Voltage and Interface Standard for Nonterminated Digital Integrated Circuit Specification* (EAI/JESD8-5).

6.24.3.1 IEEE 1149.1 JTAG Compatibility Statement

For maximum reliability, the C665x DSP includes an internal pulldown (IPD) on the TRST pin to ensure that TRST will always be asserted upon power up and the internal emulation logic of the DSP will always be properly initialized when this pin is not routed out. JTAG controllers from Texas Instruments actively drive TRST high. However, some third-party JTAG controllers may not drive TRST high but expect the use of an external pullup resistor on TRST. When using this type of JTAG controller, assert TRST to initialize the DSP after power up and externally drive TRST high before attempting any emulation or boundary scan operations.

6.25 DSP Core Description

The C66x DSP extends the performance of the C64x+ and C674x DSPs through enhancements and new features. Many of the new features target increased performance for vector processing. The C64x+ and C674x DSPs support 2-way SIMD operations for 16-bit data and 4-way SIMD operations for 8-bit data. On the C66x DSP, the vector processing capability is improved by extending the width of the SIMD instructions. C66x DSPs can execute instructions that operate on 128-bit vectors. For example the QMPY32 instruction is able to perform the element-to-element multiplication between two vectors of four 32-bit data each. The C66x DSP also supports SIMD for floating-point operations. Improved vector processing capability (each instruction can process multiple data in parallel) combined with the natural instruction level parallelism of C6000 architecture (for example, execution of up to 8 instructions per cycle) results in a very high level of parallelism that can be exploited by DSP programmers through the use of TI's optimized C/C++ compiler.

The C66x DSP consists of eight functional units, two register files, and two data paths as shown in Figure 6-25. The two general-purpose register files (A and B) each contain 32 32-bit registers for a total of 64 registers. The general-purpose registers can be used for data or can be data address pointers. The data types supported include packed 8-bit data, packed 16-bit data, 32-bit data, 40-bit data, and 64-bit data. Multiplies also support 128-bit data. 40-bit-long or 64-bit-long values are stored in register pairs, with the 32 LSBs of data placed in an even register and the remaining 8 or 32 MSBs in the next upper register (which is always an odd-numbered register). 128-bit data values are stored in register quadruplets, with the 32 LSBs of data placed in a register that is a multiple of 4 and the remaining 96 MSBs in the next 3 upper registers.

Copyright © 2012–2016, Texas Instruments Incorporated

The eight functional units (.M1, .L1, .D1, .S1, .M2, .L2, .D2, and .S2) are each capable of executing one instruction every clock cycle. The .M functional units perform all multiply operations. The .S and .L units perform a general set of arithmetic, logical, and branch functions. The .D units primarily load data from memory to the register file and store results from the register file into memory.

Each C66x .M unit can perform one of the following fixed-point operations each clock cycle: four 32 × 32 bit multiplies, sixteen 16 × 16 bit multiplies, four 16 × 32 bit multiplies, four 8 × 8 bit multiplies, four 8 × 8 bit multiplies with add operations, and four 16 × 16 multiplies with add/subtract capabilities. There is also support for Galois field multiplication for 8-bit and 32-bit data. Many communications algorithms such as FFTs and modems require complex multiplication. Each C66x .M unit can perform one 16 × 16 bit complex multiply with or without rounding capabilities, two 16 × 16 bit complex multiplies with rounding capability, and a 32 × 32 bit complex multiply with rounding capability. The C66x can also perform two 16 × 16 bit and one 32 × 32 bit complex multiply instructions that multiply a complex number with a complex conjugate of another number with rounding capability. Communication signal processing also requires an extensive use of matrix operations. Each C66x .M unit is capable of multiplying a [1 × 2] complex vector by a [2 × 2] complex matrix per cycle with or without rounding capability. A version also exists allowing multiplication of the conjugate of a [1 × 2] vector with a [2 × 2] complex matrix.

Each C66x .M unit also includes IEEE floating-point multiplication operations from the C674x DSP, which includes one single-precision multiply each cycle and one double-precision multiply every 4 cycles. There is also a mixed-precision multiply that allows multiplication of a single-precision value by a double-precision value and an operation allowing multiplication of two single-precision numbers resulting in a double-precision number. The C66x DSP improves the performance over the C674x double-precision multiplies by adding a instruction allowing one double-precision multiply per cycle and also reduces the number of delay slots from 10 down to 4. Each C66x .M unit can also perform one the following floating-point operations each clock cycle: one, two, or four single-precision multiplies or a complex single-precision multiply.

The .L and .S units can now support up to 64-bit operands. This allows for new versions of many of the arithmetic, logical, and data packing instructions to allow for more parallel operations per cycle. Additional instructions were added yielding performance enhancements of the floating point addition and subtraction instructions, including the ability to perform one double precision addition or subtraction per cycle. Conversion to/from integer and single-precision values can now be done on both .L and .S units on the C66x. Also, by taking advantage of the larger operands, instructions were also added to double the number of these conversions that can be done. The .L unit also has additional instructions for logical AND and OR instructions, as well as, 90 degree or 270 degree rotation of complex numbers (up to two per cycle). Instructions have also been added that allow for the computing the conjugate of a complex number.

The MFENCE instruction is a new instruction introduced on the C66x DSP. This instruction will create a DSP stall until the completion of all the DSP-triggered memory transactions, including:

- Cache line fills
- Writes from L1D to L2 or from the CorePac to MSMC and/or other system endpoints
- Victim write backs
- Block or global coherence operations
- Cache mode changes
- Outstanding XMC prefetch requests

This is useful as a simple mechanism for programs to wait for these requests to reach their endpoint. It also ensures ordering for writes arriving at a single endpoint through multiple paths, multiprocessor algorithms that depend on ordering, and manual coherence operations.

For more details on the C66x DSP and its enhancements over the C64x+ and C674x architectures, see the following documents:

- C66x CPU and Instruction Set Reference Guide
- C66x DSP Cache User's Guide

Copyright © 2012–2016, Texas Instruments Incorporated

- C66x CorePac User's Guide

Figure 6-25 shows the DSP core functional units and data paths.

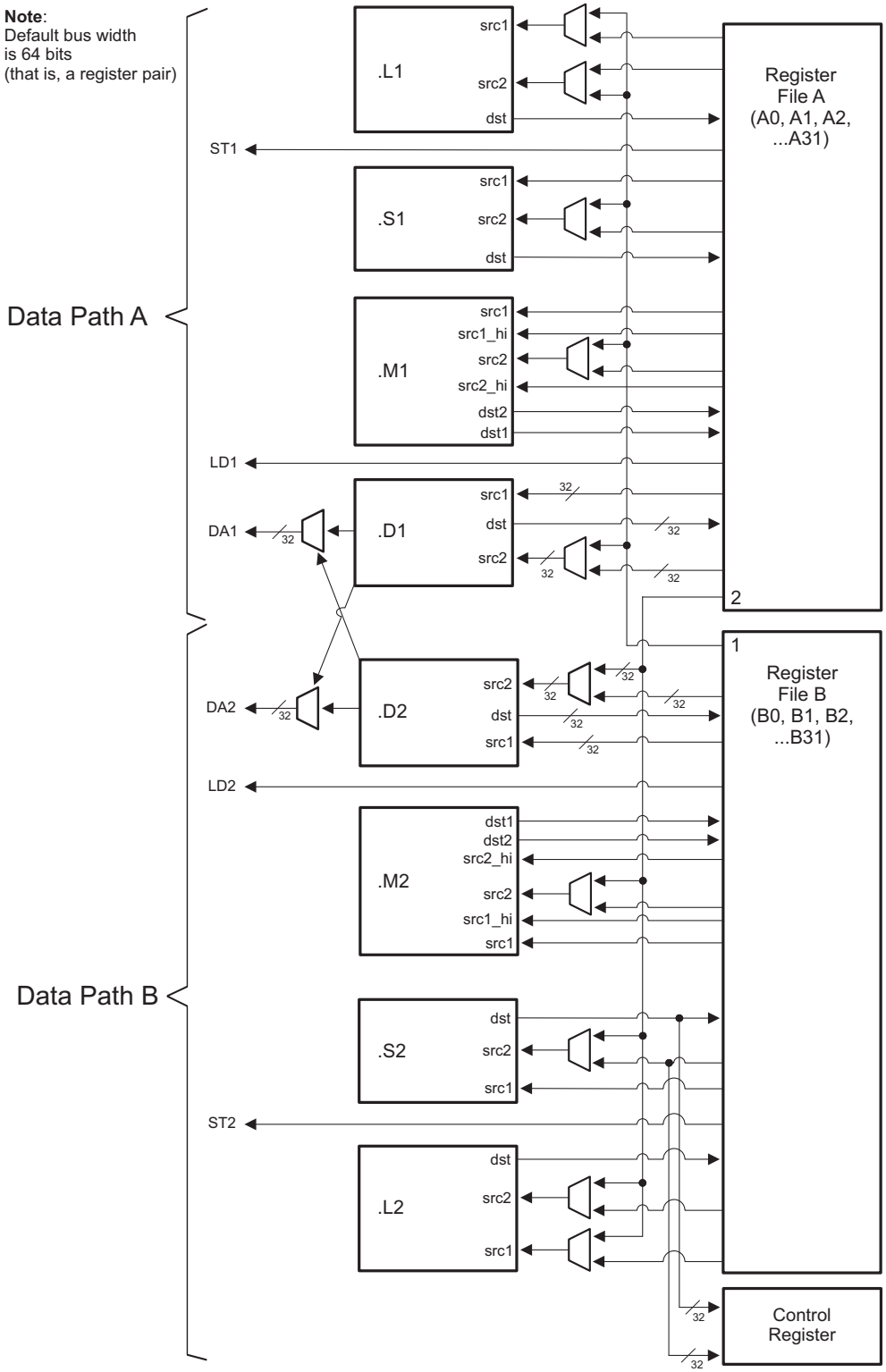

Figure 6-25. DSP Core Data Paths

6.26 Memory Map Summary

Table 6-63 shows the memory map address ranges of the C665x device.

Table 6-63. Memory Map Summary

LOGICAL 32-BIT ADDRESS		PHYSICAL 36-BIT ADDRESS			
START	END	START	END	BYTES	DESCRIPTION
00000000	007FFFFF	0 00000000	0 007FFFFF	8M	Reserved
00800000	008FFFFF	0 00800000	0 008FFFFF	1M	Local L2 SRAM
00900000	00DFFFFF	0 00900000	0 00DFFFFF	5M	Reserved
00E00000	00E07FFF	0 00E00000	0 00E07FFF	32K	Local L1P SRAM
00E08000	00EFFFFF	0 00E08000	0 00EFFFFF	1M-32K	Reserved
00F00000	00F07FFF	0 00F00000	0 00F07FFF	32K	Local L1D SRAM
00F08000	017FFFFF	0 00F08000	0 017FFFFF	9M-32K	Reserved
01800000	01BFFFFF	0 01800000	0 01BFFFFF	4M	C66x CorePac Registers
01C00000	01CFFFFF	0 01C00000	0 01CFFFFF	1M	Reserved
01D00000	01D0007F	0 01D00000	0 01D0007F	128	Tracer_MSMC_0
01D00080	01D07FFF	0 01D00080	0 01D07FFF	32K-128	Reserved
01D08000	01D0807F	0 01D08000	0 01D0807F	128	Tracer_MSMC_1
01D08080	01D0FFFF	0 01D08080	0 01D0FFFF	32K-128	Reserved
01D10000	01D1007F	0 01D10000	0 01D1007F	128	Tracer_MSMC_2
01D10080	01D17FFF	0 01D10080	0 01D17FFF	32K-128	Reserved
01D18000	01D1807F	0 01D18000	0 01D1807F	128	Tracer_MSMC_3
01D18080	01D1FFFF	0 01D18080	0 01D1FFFF	32K-128	Reserved
01D20000	01D2007F	0 01D20000	0 01D2007F	128	Tracer_QM_DMA
01D20080	01D27FFF	0 01D20080	0 01D27FFF	32K-128	Reserved
01D28000	01D2807F	0 01D28000	0 01D2807F	128	Tracer_DDR
01D28080	01D2FFFF	0 01D28080	0 01D2FFFF	32K-128	Reserved
01D30000	01D3007F	0 01D30000	0 01D3007F	128	Tracer_SM
01D30080	01D37FFF	0 01D30080	0 01D37FFF	32K-128	Reserved
01D38000	01D3807F	0 01D38000	0 01D3807F	128	Tracer_QM_CFG
01D38080	01D3FFFF	0 01D38080	0 01D3FFFF	32K-128	Reserved
01D40000	01D4007F	0 01D40000	0 01D4007F	128	Tracer_CFG
01D40080	01D47FFF	0 01D40080	0 01D47FFF	32K-128	Reserved
01D48000	01D4807F	0 01D48000	0 01D4807F	128	Tracer_L2_0
01D48080	01D4FFFF	0 01D48080	0 01D4FFFF	32K-128	Reserved
01D50000	01D5007F	0 01D50000	0 01D5007F	128	Tracer_L2_1(C6657) or Reserved (C6655)
01D50080	01D57FFF	0 01D50080	0 01D57FFF	32K-128	Reserved
01D58000	01D5807F	0 01D58000	0 01D5807F	128	Tracer_TNet_6P_A
01D58080	021B3FFF	0 01D58080	0 021B3FFF	4464K -128	Reserved
021B4000	021B47FF	0 021B4000	0 021B47FF	2K	McBSP0 Registers
021B4800	021B5FFF	0 021B4800	0 021B5FFF	6K	Reserved
021B6000	021B67FF	0 021B6000	0 021B67FF	2K	McBSP0 FIFO Registers
021B6800	021B7FFF	0 021B6800	0 021B7FFF	6K	Reserved
021B8000	021B87FF	0 021B8000	0 021B87FF	2K	McBSP1 Registers
021B8800	021B9FFF	0 021B8800	0 021B9FFF	6K	Reserved
021BA000	021BA7FF	0 021BA000	0 021BA7FF	2K	McBSP1 FIFO Registers
021BA800	021BFFFF	0 021BA800	0 021BFFFF	22K	Reserved
021C0000	021C03FF	0 021C0000	0 021C03FF	1K	TCP3d Registers

Copyright © 2012–2016, Texas Instruments Incorporated

Table 6-63. Memory Map Summary (continued)

LOGICAL 32-BIT ADDRESS		PHYSICAL 36-BIT ADDRESS			
START	END	START	END	BYTES	DESCRIPTION
021C0400	021CFFFF	0 021C0400	0 021CFFFF	63K	Reserved
021D0000	021D00FF	0 021D0000	0 021D00FF	256	VCP2_A Registers
021D0100	021D3FFF	0 021D0100	0 021D3FFF	16K - 256	Reserved
021D4000	021D40FF	0 021D4000	0 021D40FF	256	VCP2_B Registers
021D4100	021FFFFF	0 021D4100	0 021FFFFF	176K - 256	Reserved
02200000	0220007F	0 02200000	0 0220007F	128	Timer0
02200080	0220FFFF	0 02200080	0 0220FFFF	64K-128	Reserved
02210000	0221007F	0 02210000	0 0221007F	128	Reserved
02210080	0221FFFF	0 02210080	0 0221FFFF	64K-128	Reserved
02220000	0222007F	0 02220000	0 0222007F	128	Timer2
02220080	0222FFFF	0 02220080	0 0222FFFF	64K-128	Reserved
02230000	0223007F	0 02230000	0 0223007F	128	Timer3
02230080	0223FFFF	0 02230080	0 0223FFFF	64K-128	Reserved
02240000	0224007F	0 02240000	0 0224007F	128	Timer4
02240080	0224FFFF	0 02240080	0 0224FFFF	64K-128	Reserved
02250000	0225007F	0 02250000	0 0225007F	128	Timer5
02250080	0225FFFF	0 02250080	0 0225FFFF	64K-128	Reserved
02260000	0226007F	0 02260000	0 0226007F	128	Timer6
02260080	0226FFFF	0 02260080	0 0226FFFF	64K-128	Reserved
02270000	0227007F	0 02270000	0 0227007F	128	Timer7
02270080	0230FFFF	0 02270080	0 0230FFFF	640K - 128	Reserved
02310000	023101FF	0 02310000	0 023101FF	512	PLL Controller
02310200	0231FFFF	0 02310200	0 0231FFFF	64K-512	Reserved
02320000	023200FF	0 02320000	0 023200FF	256	GPIO
02320100	0232FFFF	0 02320100	0 0232FFFF	64K-256	Reserved
02330000	023303FF	0 02330000	0 023303FF	1K	SmartReflex
02330400	0234FFFF	0 02330400	0 0234FFFF	127K	Reserved
02350000	02350FFF	0 02350000	0 02350FFF	4K	Power Sleep Controller (PSC)
02351000	0235FFFF	0 02351000	0 0235FFFF	64K-4K	Reserved
02360000	023603FF	0 02360000	0 023603FF	1K	Memory Protection Unit (MPU) 0
02360400	02367FFF	0 02360400	0 02367FFF	31K	Reserved
02368000	023683FF	0 02368000	0 023683FF	1K	Memory Protection Unit (MPU) 1
02368400	0236FFFF	0 02368400	0 0236FFFF	31K	Reserved
02370000	023703FF	0 02370000	0 023703FF	1K	Memory Protection Unit (MPU) 2
02370400	02377FFF	0 02370400	0 02377FFF	31K	Reserved
02378000	023783FF	0 02378000	0 023783FF	1K	Memory Protection Unit (MPU) 3
02378400	0237FFFF	0 02378400	0 0237FFFF	31K	Reserved
02380000	023803FF	0 02380000	0 023803FF	1K	Memory Protection Unit (MPU) 4
02380400	023FFFFF	0 02380400	0 023FFFFF	511K	Reserved
02440000	02443FFF	0 02440000	0 02443FFF	16K	DSP trace formatter 0
02444000	0244FFFF	0 02444000	0 0244FFFF	48K	Reserved
02450000	02453FFF	0 02450000	0 02453FFF	16K	DSP trace formatter 1 (C6657) or Reserved (C6655)
02454000	02521FFF	0 02454000	0 02521FFF	824K	Reserved
02522000	02522FFF	0 02522000	0 02522FFF	4K	Efuse
02523000	0252FFFF	0 02523000	0 0252FFFF	52K	Reserved
02530000	0253007F	0 02530000	0 0253007F	128	I^2C data and control

Copyright © 2012–2016, Texas Instruments Incorporated

Table 6-63. Memory Map Summary (continued)

LOGICAL 32-BIT ADDRESS		PHYSICAL 36-BIT ADDRESS			
START	END	START	END	BYTES	DESCRIPTION
02530080	0253FFFF	0 02530080	0 0253FFFF	64K-128	Reserved
02540000	0254003F	0 02540000	0 0254003F	64	UART 0
02540400	0254FFFF	0 02540400	0 0254FFFF	64K-64	Reserved
02550000	0255003F	0 02550000	0 0255003F	64	UART 1
02550040	0257FFFF	0 02550040	0 0257FFFF	192K-64	Reserved
02580000	02580FFF	0 02580000	0 02580FFF	4K	uPP
02581000	025FFFFF	0 02581000	0 025FFFFF	508K	Reserved
02600000	02601FFF	0 02600000	0 02601FFF	8K	Chip Interrupt Controller (CIC) 0
02602000	02603FFF	0 02602000	0 02603FFF	8K	Reserved
02604000	02605FFF	0 02604000	0 02605FFF	8K	Chip Interrupt Controller (CIC) 1
02606000	02607FFF	0 02606000	0 02607FFF	8K	Reserved
02608000	02609FFF	0 02608000	0 02609FFF	8K	Chip Interrupt Controller (CIC) 2
0260A000	0261FFFF	0 0260A000	0 0261FFFF	88K	Reserved
02620000	026207FF	0 02620000	0 026207FF	2K	Chip-Level Registers
02620800	0263FFFF	0 02620800	0 0263FFFF	126K	Reserved
02640000	026407FF	0 02640000	0 026407FF	2K	Semaphore
02640800	0273FFFF	0 02640800	0 0273FFFF	1022K	Reserved
02740000	02747FFF	0 02740000	0 02747FFF	32K	EDMA Channel Controller (EDMA3CC)
02748000	0278FFFF	0 02748000	0 0278FFFF	288K	Reserved
02790000	027903FF	0 02790000	0 027903FF	1K	EDMA3CC Transfer Controller EDMA3TC0
02790400	02797FFF	0 02790400	0 02797FFF	31K	Reserved
02798000	027983FF	0 02798000	0 027983FF	1K	EDMA3CC Transfer Controller EDMA3TC1
02798400	0279FFFF	0 02798400	0 0279FFFF	31K	Reserved
027A0000	027A03FF	0 027A0000	0 027A03FF	1K	EDMA3CC Transfer Controller EDMA3TC2
027A0400	027A7FFF	0 027A0400	0 027A7FFF	31K	Reserved
027A8000	027A83FF	0 027A8000	0 027A83FF	1K	EDMA3CC Transfer Controller EDMA3TC3
027A8400	027CFFFF	0 027A8400	0 027CFFFF	159K	Reserved
027D0000	027D0FFF	0 027D0000	0 027D0FFF	4K	TI embedded trace buffer (TETB) - CorePac0
027D1000	027DFFFF	0 027D1000	0 027DFFFF	60K	Reserved
027E0000	027E0FFF	0 027E0000	0 027E0FFF	4K	TI embedded trace buffer (TETB) - CorePac1 (C6657) or Reserved (C6655)
027E1000	0284FFFF	0 027E1000	0 0284FFFF	444K	Reserved
02850000	02857FFF	0 02850000	0 02857FFF	32K	TI embedded trace buffer (TETB) — system
02858000	028FFFFF	0 02858000	0 028FFFFF	672K	Reserved
02900000	02920FFF	0 02900000	0 02920FFF	132K	Serial RapidIO (SRIO) configuration
02921000	029FFFFF	0 02921000	0 029FFFFF	1M-132K	Reserved
02A00000	02AFFFFF	0 02A00000	0 02AFFFFF	1M	Queue manager subsystem configuration
02B00000	02C07FFF	0 02B00000	0 02C07FFF	1056K	Reserved
02C08000	02C8BFFF	0 02C08000	0 02C8BFFF	16K	EMAC subsystem configuration
02C0C000	07FFFFFF	0 02C0C000	0 07FFFFFF	84M - 48K	Reserved
08000000	0800FFFF	0 08000000	0 0800FFFF	64K	Extended memory controller (XMC) configuration
08010000	0BBFFFFF	0 08010000	0 0BBFFFFF	60M-64K	Reserved
0BC00000	0BCFFFFF	0 0BC00000	0 0BCFFFFF	1M	Multicore shared memory controller (MSMC) config
0BD00000	0BFFFFFF	0 0BD00000	0 0BFFFFFF	3M	Reserved
0C000000	0C1FFFFF	0 0C000000	0 0C1FFFFF	1M	Multicore shared memory (MSM)
0C200000	107FFFFF	0 0C100000	0 107FFFFF	71 M	Reserved

Copyright © 2012–2016, Texas Instruments Incorporated

Table 6-63. Memory Map Summary (continued)

LOGICAL 32-BIT ADDRESS		PHYSICAL 36-BIT ADDRESS		BYTES	DESCRIPTION
START	END	START	END		
10800000	108FFFFF	0 10800000	0 108FFFFF	1M	CorePac0 L2 SRAM
10900000	10DFFFFF	0 10900000	0 10DFFFFF	5M	Reserved
10E00000	10E07FFF	0 10E00000	0 10E07FFF	32K	CorePac0 L1P SRAM
10E08000	10EFFFFF	0 10E08000	0 10EFFFFF	1M-32K	Reserved
10F00000	10F07FFF	0 10F00000	0 10F07FFF	32K	CorePac0 L1D SRAM
10F08000	117FFFFF	0 10F08000	0 117FFFFF	9M-32K	Reserved
11800000	118FFFFF	0 11800000	0 118FFFFF	1M	CorePac1 L2 SRAM (C6657) or Reserved (C6655)
11900000	11DFFFFF	0 11900000	0 11DFFFFF	5M	Reserved
11E00000	11E07FFF	0 11E00000	0 11E07FFF	32K	CorePac1 L1P SRAM (C6657) or Reserved (C6655)
11E08000	11EFFFFF	0 11E08000	0 11EFFFFF	1M-32K	Reserved
11F00000	11F07FFF	0 11F00000	0 11F07FFF	32K	CorePac1 L1D SRAM (C6657) or Reserved (C6655)
11F08000	1FFFFFFF	0 11F08000	0 1FFFFFFF	225M-32K	Reserved
20000000	200FFFFF	0 20000000	0 200FFFFF	1M	System trace manager (STM) configuration
20100000	207FFFFF	0 20100000	0 207FFFFF	7M	Reserved
20800000	208FFFFF	0 20080000	0 208FFFFF	1M	TCP3d Data
20900000	20AFFFFF	0 20900000	0 20AFFFFF	2M	Reserved
20B00000	20B1FFFF	0 20B00000	0 20B1FFFF	128K	Boot ROM
20B20000	20BEFFFF	0 20B20000	0 20BEFFFF	832K	Reserved
20BF0000	20BF01FF	0 20BF0000	0 20BF01FF	512	SPI
20BF0400	20BFFFFF	0 20BF0200	0 20BFFFFF	64K -512	Reserved
20C00000	20C000FF	0 20C00000	0 20C000FF	256	EMIF16 configuration
20C00100	20FFFFFF	0 20C00100	0 20FFFFFF	4M - 256	Reserved
21000000	210001FF	1 00000000	1 000001FF	512	DDR3 EMIF configuration
21000200	213FFFFF	0 21000200	0 213FFFFF	4M-512	Reserved
21400000	214000FF	0 21400000	0 214000FF	256	HyperLink config
21400100	217FFFFF	0 21400100	0 217FFFFF	4M-256	Reserved
21800000	21807FFF	0 21800000	0 21807FFF	32K	PCIe config
21808000	33FFFFFF	0 21808000	0 33FFFFFF	8M-32K	Reserved
22000000	22000FFF	0 22000000	0 22000FFF	4K	McBSP0 FIFO Data
22000100	223FFFFF	0 22000100	0 223FFFFF	4M-4K	Reserved
22400000	22400FFF	0 22400000	0 22400FFF	4K	McBSP1 FIFO Data
22400100	229FFFFF	0 22400100	0 229FFFFF	6M-4K	Reserved
22A00000	22A0FFFF	0 22A00000	0 22A0FFFF	64K	VCP2_A
22A01000	22AFFFFF	0 22A01000	0 22AFFFFF	1M-64K	Reserved
22B00000	22B0FFFF	0 22B00000	0 22B0FFFF	64K	VCP2_B
22B01000	33FFFFFF	0 22B01000	0 33FFFFFF	277M-64K	Reserved
34000000	341FFFFF	0 34000000	0 341FFFFF	2M	Queue manager subsystem data
34200000	3FFFFFFF	0 34200000	0 3FFFFFFF	190M	Reserved
40000000	4FFFFFFF	0 40000000	0 4FFFFFFF	256M	HyperLink data
50000000	5FFFFFFF	0 50000000	0 5FFFFFFF	256M	Reserved
60000000	6FFFFFFF	0 60000000	0 6FFFFFFF	256M	PCIe data

Copyright © 2012–2016, Texas Instruments Incorporated

Table 6-63. Memory Map Summary (continued)

LOGICAL 32-BIT ADDRESS		PHYSICAL 36-BIT ADDRESS		BYTES	DESCRIPTION
START	END	START	END		
70000000	73FFFFFF	0 70000000	0 73FFFFFF	64M	EMIF16 CE0 data space, supports NAND, NOR, or SRAM memory(1)
74000000	77FFFFFF	0 74000000	0 77FFFFFF	64M	EMIF16 CE1 data space, supports NAND, NOR, or SRAM memory(1)
78000000	7BFFFFFF	0 78000000	0 7BFFFFFF	64M	EMIF16 CE2 data space, supports NAND, NOR, or SRAM memory(1)
7C000000	7FFFFFFF	0 7C000000	0 7FFFFFFF	64M	EMIF16 CE3 data space, supports NAND, NOR or SRAM memory(1)
80000000	FFFFFFFF	8 00000000	8 7FFFFFFF	2G	DDR3 EMIF data(2)

(1) 32MB per chip select for 16-bit NOR and SRAM. 16MB per chip select for 8-bit NOR and SRAM. The 32MB and 16MB size restrictions do not apply to NAND.
(2) The memory map only shows the default MPAX configuration of DDR3 memory space. For the extended DDR3 memory space access (up to 8GB), see the MPAX configuration details in *C66x CorePac User's Guide* and *Multicore Shared Memory Controller (MSMC) for KeyStone Devices User's Guide* in Section 10.3.

6.27 Boot Sequence

The boot sequence is a process by which the DSP's internal memory is loaded with program and data sections. The DSP's internal registers are programmed with predetermined values. The boot sequence is started automatically after each power-on reset, warm reset, and system reset. A local reset to an individual C66x CorePac should not affect the state of the hardware boot controller on the device. For more details on the initiators of the resets, see Section 6.5. The bootloader uses a section of the L2 SRAM (start address 0x008EFD00 and end address 0x008F FFFF) during initial booting of the device. For more details on the type of configurations stored in this reserved L2 section see the Bootloader for the C66x DSP User's Guide.

Copyright © 2012–2016, Texas Instruments Incorporated

6.28 Boot Modes Supported and PLL Settings

The device supports several boot processes, which leverage the internal boot ROM. Most boot processes are software driven, using the BOOTMODE[2:0] device configuration inputs to determine the software configuration that must be completed. From a hardware perspective, there are two possible boot modes:

- **ROM Boot** - C66x CorePac0 is released from reset and begins executing from the L3 ROM base address. After performing the boot process (for example, from I^2C ROM, Ethernet, or RapidIO), C66x CorePac0 then begins execution from the provided boot entry point. For C6657 only, the other C66x CorePac is released from reset and begins executing an IDLE from the L3 ROM. It is then released from IDLE based on interrupts generated by C66x CorePac0. See the Bootloader for the C66x DSP User's Guide for more details.

The boot process performed by the C66x CorePac0 in ROM boot is determined by the BOOTMODE[12:0] value in the DEVSTAT register. The C66x CorePac0 reads this value, and then executes the associated boot process in software. Figure 6-26 shows the bits associated with BOOTMODE[12:0].

Figure 6-26. Boot Mode Pin Decoding

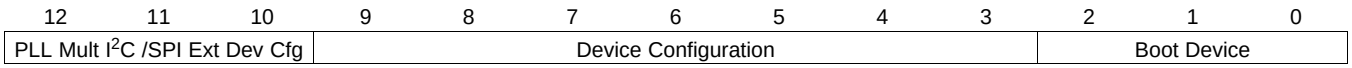

6.28.1 Boot Device Field

The Boot Device field BOOTMODE[2:0] defines the boot device that is chosen. Table 6-64 shows the supported boot modes.

Table 6-64. Boot Mode Pins: Boot Device Values

Bit	Field	Description
2-0	Boot Device	Device boot mode • 0 = EMIF16 / UART / No Boot • 1 = Serial Rapid I/O • 2 = Ethernet (SGMII) • 3 = NAND • 4 = PCIe • 5 = I^2C • 6 = SPI • 7 = HyperLink

Copyright © 2012–2016, Texas Instruments Incorporated

6.28.2 Device Configuration Field

The device configuration fields BOOTMODE[9:3] are used to configure the boot peripheral and, therefore, the bit definitions depend on the boot mode.

6.28.2.1 EMIF16 / UART / No Boot Device Configuration

Figure 6-27. EMIF16 / UART / No Boot Configuration Fields

9	8	7	6	5	4	3
Submode Specific Configuration				Submode		

Table 6-65. EMIF16 / UART / No Boot Configuration Field Descriptions

Bit	Field	Description
9-6	Submode Specific Configuration	Configures the selected submode. See Section 6.28.2.1.1, Section 6.28.2.1.2, and Section 6.28.2.1.3
5-3	Submode	Submode selection. • 0 = No boot • 1 = UART port 0 boot • 2 - 3 = Reserved • 4 = EMIF16 boot • 5 = UART port 1 boot • 6 - 7 = Reserved

Copyright © 2012–2016, Texas Instruments Incorporated

6.28.2.1.1 No Boot Mode

No boot mode is shown in Figure 6-28 and described in Table 6-66.

Figure 6-28. No Boot Configuration Fields

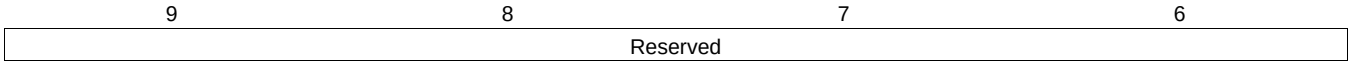

Table 6-66. No Boot Configuration Field Descriptions

Bit	Field	Description
9-6	Reserved	Reserved

6.28.2.1.2 UART Boot Mode

UART boot mode is shown in Figure 6-29 and described in Table 6-67.

Figure 6-29. UART Boot Configuration Fields

9	8	7	6
Speed		Parity	

Table 6-67. UART Boot Configuration Field Descriptions

Bit	Field	Description
9-8	Speed	UART interface speed. • 0 = 115200 baud • 1 = 38400 baud • 2 = 19200 baud • 3 = 9600 baud
7-6	Parity	UART parity used during boot. • 0 = None • 1 = Odd • 2 = Even • 4 = None

Copyright © 2012–2016, Texas Instruments Incorporated

6.28.2.1.3 EMIF16 Boot Mode

EMIF16 boot mode is shown in Figure 6-30 and described in Table 6-68.

Figure 6-30. EMIF16 Boot Configuration Fields

9	8	7	6
Wait Enable	Width Select	Chip Select	

Table 6-68. EMIF16 Boot Configuration Field Descriptions

Bit	Field	Description
9	Wait Enable	Extended Wait mode for EMIF16. • 0 = Wait enable disabled (EMIF16 submode) • 1 = Wait enable enabled (EMIF16 submode)
8	Width Select	EMIF data width for EMIF16. • 0 = 8-bit wide EMIF (EMIF16 submode) • 1 = 16-bit wide EMIF (EMIF16 submode)
7-6	Chip Select	EMIF Chip Select used during EMIF 16 boot. • 0 = CS2 • 1 = CS3 • 2 = CS4 • 4 = CS5

Copyright © 2012–2016, Texas Instruments Incorporated

6.28.2.2 Serial Rapid I/O Boot Device Configuration

The device ID is always set to 0xff (8-bit node IDs) or 0xffff (16-bit node IDs) at power-on reset.

Figure 6-31. Serial Rapid I/O Device Configuration Fields

9	8	7	6	5	4	3
Lane Setup	Data Rate		Ref Clock		Reserved	

Table 6-69. Serial Rapid I/O Configuration Field Descriptions

Bit	Field	Description
9	Lane Setup	SRIO port and lane configuration • 0 = Port Configured as 4 ports each 1 lane wide (4 -1× ports) • 1 = Port Configured as 2 ports 2 lanes wide (2 – 2× ports)
8-7	Data Rate	SRIO data rate configuration • 0 = 1.25 GBaud • 1 = 2.5 GBaud • 2 = 3.125 GBaud • 3 = 5.0 GBaud
6-5	Ref Clock	SRIO reference clock configuration • 0 = 156.25 MHz • 1 = 250 MHz • 2 = 312.5 MHz • 3 = Reserved
4-3	Reserved	Reserved

In SRIO boot mode, the message mode will be enabled by default. If use of the memory reserved for received messages is required and reception of messages cannot be prevented, the master can disable the message mode by writing to the boot table and generating a boot restart.

Copyright © 2012–2016, Texas Instruments Incorporated

6.28.2.3 Ethernet (SGMII) Boot Device Configuration

SGMII boot is shown in Figure 6-32 and described in Table 6-70.

Figure 6-32. Ethernet (SGMII) Device Configuration Fields

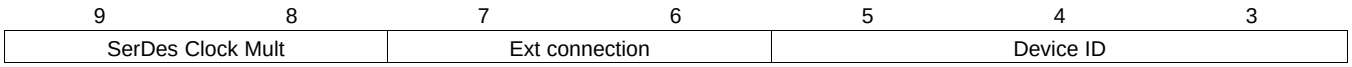

Table 6-70. Ethernet (SGMII) Configuration Field Descriptions

Bit	Field	Description
9-8	SerDes Clock Mult	SGMII SerDes input clock. The output frequency of the PLL must be 1.25GB. • 0 = ×8 for input clock of 156.25 MHz • 1 = ×5 for input clock of 250 MHz • 2 = ×4 for input clock of 312.5 MHz • 3 = Reserved
7-6	Ext connection	External connection mode • 0 = MAC to MAC connection, master with auto negotiation • 1 = MAC to MAC connection, slave, and MAC to PHY • 2 = MAC to MAC, forced link • 3 = MAC to fiber connection
5-3	Device ID	This value can range from 0 to 7 is used in the device ID field of the Ethernet-ready frame.

Copyright © 2012–2016, Texas Instruments Incorporated

6.28.2.4 NAND Boot Device Configuration

NAND boot is shown in Figure 6-33 and described in Table 6-71.

Figure 6-33. NAND Device Configuration Fields

9	8	7	6	5	4	3
1st Block					I^2C	Reserved

Table 6-71. NAND Configuration Field Descriptions

Bit	Field	Description
9-5	1st Block	NAND Block to be read first by the boot ROM. • 0 = Block 0 • ... • 31 = Block 31
4	I^2C	NAND parameters read from I^2C EEPROM • 0 = Parameters are not read from I^2C • 1 = Parameters are read from I^2C
3	Reserved	Reserved

Copyright © 2012–2016, Texas Instruments Incorporated

6.28.2.5 PCI Boot Device Configuration

Extra device configuration is provided in the PCI bits in the DEVSTAT register. PCI boot is shown in Figure 6-34 and described in Table 6-72 and Table 6-73.

Figure 6-34. PCI Device Configuration Fields

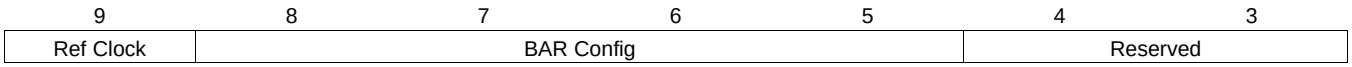

Table 6-72. PCI Device Configuration Field Descriptions

Bit	Field	Description
9	Ref Clock	PCIe reference clock configuration • 0 = 100 MHz • 1 = 250 MHz
8-5	BAR Config	PCIe BAR registers configuration This value can range from 0 to 0xf. See Table 6-73.
4-3	Reserved	Reserved

Table 6-73. BAR Config / PCIe Window Sizes

		32-BIT ADDRESS TRANSLATION					64-BIT ADDRESS TRANSLATION	
BAR CFG	BAR0	BAR1	BAR2	BAR3	BAR4	BAR5	BAR2/3	BAR4/5
0b0000	PCIe MMRs	32	32	32	32	Clone of BAR4		
0b0001		16	16	32	64			
0b0010		16	32	32	64			
0b0011		32	32	32	64			
0b0100		16	16	64	64			
0b0101		16	32	64	64			
0b0110		32	32	64	64			
0b0111		32	32	64	128			
0b1000		64	64	128	256			
0b1001		4	128	128	128			
0b1010		4	128	128	256			
0b1011		4	128	256	256			
0b1100							256	256
0b1101							512	512
0b1110							1024	1024
0b1111							2048	2048

Copyright © 2012–2016, Texas Instruments Incorporated

6.28.2.6 I²C Boot Device Configuration

6.28.2.6.1 I²C Master Mode

In master mode, the I²C device configuration uses 10 bits of device configuration instead of 7 as used in other boot modes. In this mode, the device will make the initial read of the I²C EEPROM while the PLL is in bypass mode. The initial read will contain the desired clock multiplier, which will be set up prior to any subsequent reads. I²C master mode is shown in Figure 6-35 and described in Table 6-74.

Figure 6-35. I²C Master Mode Device Configuration Bit Fields

12	11	10	9	8	7	6	5	4	3
Mode	Address		Speed	Parameter Index					

Table 6-74. I²C Master Mode Device Configuration Field Descriptions

Bit	Field	Description
12	Mode	I²C operation mode • 0 = Master mode • 1 = Passive mode (see Section 6.28.2.6.2)
11 - 10	Address	I²C bus address configuration • 0 = Boot from I²C EEPROM at I²C bus address 0x50 • 1 = Boot from I²C EEPROM at I²C bus address 0x51 • 2= Boot from I²C EEPROM at I²C bus address 0x52 • 3= Boot from I²C EEPROM at I²C bus address 0x53
9	Speed	I²C data rate configuration • 0 = I²C slow mode. Initial data rate is SYSCLK / 5000 until PLLs and clocks are programmed • 1 = I²C fast mode. Initial data rate is SYSCLK / 250 until PLLs and clocks are programmed
8-3	Parameter Index	Identifies the index of the configuration table initially read from the I2C EEPROM This value can range from 0 to 31.

Copyright © 2012–2016, Texas Instruments Incorporated

6.28.2.6.2 I²C Passive Mode

In passive mode, the device does not drive the clock, but simply acks data received on the specified address. I²C passive mode is shown in Figure 6-36 and described in Table 6-75.

Figure 6-36. I²C Passive Mode Device Configuration Bit Fields

12	11	10	9	8	7	6	5	4	3
Mode	Address							Reserved	

Table 6-75. I²C Passive Mode Device Configuration Field Descriptions

Bit	Field	Description
12	Mode	I²C operation mode • 0 = Master mode (see Section 6.28.2.6.1) • 1 = Passive mode
11 - 5	Address	I²C bus address accepted during boot. Value may range from 0x00 to 0x7F
4 - 3	Reserved	Reserved

Copyright © 2012–2016, Texas Instruments Incorporated

6.28.2.7 SPI Boot Device Configuration

In SPI boot mode, the SPI device configuration uses 10 bits of device configuration instead of 7 as used in other boot modes. SPI boot is shown in Figure 6-37 and described in Table 6-76.

Figure 6-37. SPI Device Configuration Bit Fields

12	11	10	9	8	7	6	5	4	3
Mode		4, 5 Pin	Addr Width	Chip Select		Parameter Table Index			

Table 6-76. SPI Device Configuration Field Descriptions

Bit	Field	Description
12-11	Mode	Clk Pol / Phase • 0 = Data is output on the rising edge of SPICLK. Input data is latched on the falling edge. • 1 = Data is output one half-cycle before the first rising edge of SPICLK and on subsequent falling edges. Input data is latched on the rising edge of SPICLK. • 2 = Data is output on the falling edge of SPICLK. Input data is latched on the rising edge. • 3 = Data is output one half-cycle before the first falling edge of SPICLK and on subsequent rising edges. Input data is latched on the falling edge of SPICLK.
10	4, 5 Pin	SPI operation mode configuration • 0 = 4-pin mode used • 1 = 5-pin mode used
9	Addr Width	SPI address width configuration • 0 = 16-bit address values are used • 1 = 24-bit address values are used
8-7	Chip Select	The chip select field value
6-3	Parameter Table Index	Specifies which parameter table is loaded

Copyright © 2012–2016, Texas Instruments Incorporated

6.28.2.8 HyperLink Boot Device Configuration

Figure 6-38. HyperLink Boot Device Configuration Fields

9	8	7	6	5	4	3
Reserved	Data Rate		Ref Clock		Reserved	

Table 6-77. HyperLink Boot Device Configuration Field Descriptions

Bit	Field	Description
9	Reserved	Reserved
8-7	Data Rate	HyperLink data rate configuration • 0 = 1.25 GBaud/s • 1 = 3.125 GBaud/s • 2 = 6.25 GBaud/s • 3 = Reserved
6-5	Ref Clocks	HyperLink reference clock configuration • 0 = 156.25 MHz • 1 = 250 MHz • 2 = 312.5 MHz • 3 = Reserved
4-3	Reserved	Reserved

Copyright © 2012–2016, Texas Instruments Incorporated

6.28.3 Boot Parameter Table

The ROM Bootloader (RBL) is guided by the boot parameter table to carry out the boot process. The boot parameter table is the most common format the RBL employs to determine the boot flow. These boot parameter tables have certain parameters common across all the boot modes, while the rest of the parameters are unique to the boot modes. Table 6-78 lists the common entries in the boot parameter table.

Table 6-78. Boot Parameter Table Common Values

Byte Offset	Name	Description
0	Length	The length of this table, including this length field, in bytes.
2	Checksum	Identifies the device port number to boot from, if applicable. The value 0xFFFF indicates that all ports are configured (Ethernet, SRIO).
4	Boot Mode	See Table 6-79
6	Port Num	Identifies the device port number to boot from, if applicable. The value 0xFFFF indicates that all ports are configured (Ethernet, SRIO).
8	PLL config, MSW	PLL configuration, MSW (see Figure 6-39)
10	PLL config, LSW	PLL configuration, LSW

Table 6-79. Boot Parameter Table Boot Mode Field

Value	Boot Mode
10	Ethernet (boot table)
20	Rapid I/O
30	PCIe
40	I2C Master
41	I2C Slave
42	I2C Master Write
50	SPI
60	Hyperlink
70	EMIF16
80	NAND
81	NAND I2C
100	SLEEP, no PLL configuration
110	UART

Figure 6-39. Boot Parameter PLL Configuration Field

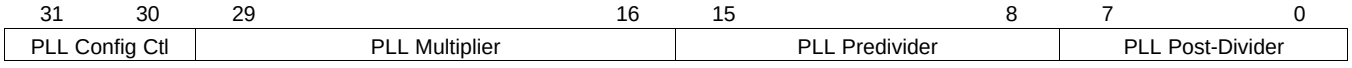

Table 6-80. PLL Configuration Field Description

Field	Value	Description
PLL Config Ctl	0b00	PLL is not configured
	0b01	PLL is configured only if it is currently disabled or in bypass
	0b10	PLL is configured only if it is currently disabled or in bypass
	0b11	PLL is disabled and put into bypass
Predivider	0-255	Input clock division. The value 0 is treated as predivide by 1
Multiplier	0-16383	Multiplier. The value 0 is treated as multiply by 1
Post-divider	0-255	PLL output division. The value 0 is treated as post divide by 1

Copyright © 2012–2016, Texas Instruments Incorporated

6.28.3.1 Sleep / XIP Mode Parameter Table

The sleep mode parameter table has no fields in addition to the common fields described in Section 6.28.3.

Table 6-81. EMIF16 XIP Parameter Table Values

Byte Offset	Name	Descriptions
12	Options	Figure 6-40
14	Type	Must be set to 0 for NOR flash
16	Branch Addr, MSW	Address to branch to
18	Branch Addr, LSW	
20	CsNum	The chip select number, valid values are 2-5
22	memWidth	The bit width of the memory, valid values are 8 or 16
24	waitEnable	Extended wait is enabled if this value is 1, otherwise disabled
26	Async config, MSW	EMIF16 async config register value, msw
28	Async config, LSW	EMIF16 async config register value, lsw

Figure 6-40. EMIF16 XIP Options Fields

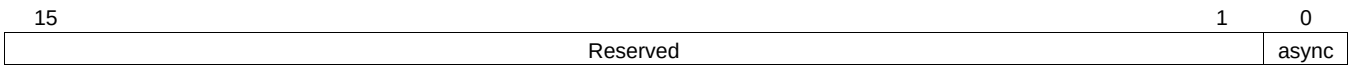

Table 6-82. EMIF16 XIP Option Field Descriptions

Field	Value	Description
Async	0	The async config register is not changed by the boot code
	1	The async config value in the boot parameter table is programmed in the async config register (EMIF timing values)

6.28.3.2 SRIO Mode Boot Parameter Table

Table 6-83. SRIO Mode Boot Parameter Table

Byte Offset	Name	Description
12	Options	See Figure 6-41
14	Lane Setup	See Table 6-85
16	Reserved	Reserved
18	Node ID	The node ID value to set for this device
20	SERDES ref clk	The SERDES reference clock frequency, in 1/100 MHZ. Used only if PLL setup field in options is set.
22	Link Rate	Link rate, MHz. Used only if PLL setup field in options is set.
24	PF Low	Packet forward address range, low value
26	PF high	Packet forward address range, high value
28	Promiscuous Mask	A bit is set for each lane/port that is configured as promiscuous.
30	Serdes AUX, MSW	Serdes Auxillary Register Configuration, MSW
32	Serdes AUX, LSW	Serdes Auxillary Register Configuration, LSW
34	SERDES Rx Lane 0, MSW	Serdes Rx Config, Lane 0, MSW
36	SERDES Rx Lane 0, LSW	Serdes Rx Config, Lane 0, LSW
38	SERDES Rx Lane 1, MSW	Serdes Rx Config, Lane 1, MSW
40	SERDES Rx Lane 1, LSW	Serdes Rx Config, Lane 1, LSW
42	SERDES Rx Lane 2, MSW	Serdes Rx Config, Lane 2, MSW
44	SERDES Rx Lane 2, LSW	Serdes Rx Config, Lane 2, LSW
46	SERDES Rx Lane 3, MSW	Serdes Rx Config, Lane 3, MSW
48	SERDES Rx Lane 3, LSW	Serdes Rx Config, Lane 3, LSW
50	SERDES Tx Lane 0, MSW	Serdes Tx Config, Lane 0, MSW
52	SERDES Tx Lane 0, LSW	Serdes Tx Config, Lane 0, LSW
54	SERDES Tx Lane 1, MSW	Serdes Tx Config, Lane 1, MSW
56	SERDES Tx Lane 1, LSW	Serdes Tx Config, Lane 1, LSW
58	SERDES Tx Lane 2, MSW	Serdes Tx Config, Lane 2, MSW
60	SERDES Tx Lane 2, LSW	Serdes Tx Config, Lane 2, LSW
62	SERDES Tx Lane 3, MSW	Serdes Tx Config, Lane 3, MSW
64	SERDES Tx Lane 3, LSW	Serdes Tx Config, Lane 3, LSW

Figure 6-41. SRIO Boot Options

15 – 5	4	3	2	1	0
Reserved	PLL Setup	QM Bypass	Cfg Bypass	Mailbox En	Tx En

Copyright © 2012–2016, Texas Instruments Incorporated

Table 6-84. SRIO Boot Options Description

Parameter	Value	Description
PLL Setup	0	Serdes Configuration registers taken without modification
	1	Multiplier and rate fields are modified based on the reference clock and link rate fields.
QM Bypass	0	Configure the QM (and cpdma)
	1	Bypass QM configuration
Cfg Bypass	0	Configure the SRIO
	1	Bypass SRIO configuration
Mailbox En	0	Mailbox mode disabled. SRIO boot is in Master mode
	1	Mailbox mode enabled. SRIO boot is in message mode (master boot still works)
Tx En	0	SRIO transmit disabled
	1	SRIO transmit enabled

Table 6-85. SRIO Lane Setup Values

Value	Description
0	SRIO configured as four 1x ports
1	SRIO configured as 3 ports (2x, 1x, 1x)
2	SRIO configured as 3 ports (1x, 1x, 2x)
3	SRIO configured as 2 ports (2x, 2x)
4	SRIO configured as 1 4x port
5-0xFFFF	Reserved

6.28.3.3 Ethernet Mode Boot Parameter Table

The default multicast Ethernet MAC address is the broadcast address.

Table 6-86. Ethernet Boot Parameter Table Values

Byte Offset	Name	Description
12	Options	See Figure 6-42
14	MAC High	The 16 MSBs of the MAC address to receive during boot
16	MAC Med	The 16 middle bits of the MAC address to receive during boot
18	MAC Low	The 16 LSBs of the MAC address to receive during boot
20	Multi MAC High	The 16 MSBs of the multicast MAC address to receive during boot
22	Multi MAC Med	The 16 middle bits of the multicast MAC address to receive during boot
24	Mulit MAC Low	The 16 LSBs of the multicast MAC address to receive during boot
26	Source Port	The source UDP port to accept boot packets from. A value of 0 will accept packets from any UDP port
28	Dest Port	The destination port to accept boot packets on.
30	Device ID 12	The first 2 bytes of the device ID. This is typically a string value, and is sent in the Ethernet ready frame
32	Device ID 34	The second 2 bytes of the device ID.
34	Dest MAC High	The 16 MSBs of the MAC destination address used for the Ethernet ready frame. Default is broadcast.
36	Dest MAC Med	The 16 middle bits of the MAC destination address
38	DEST MAC Low	The 16 LSBs of the MAC destination address
40	Sgmii Config	See Figure 6-43
42	Sgmii Control	The SGMII control register value (if table value not used)
44	Sgmii Adv Abilility	The SGMII ADV Ability register value (if table value not used)
46	Sgmii Tx Cfg High	The 16 MSBs of the sgmii Tx config register (if table value not used)
48	Sgmii Tx Cfg Low	The 16 LSBs of the sgmii Tx config register (if table value not used)

Copyright © 2012–2016, Texas Instruments Incorporated

Table 6-86. Ethernet Boot Parameter Table Values (continued)

Byte Offset	Name	Description
50	Sgmii Rx Cfg High	The 16 MSBs of the sgmii Rx config register (if table value not used)
52	Sgmii Rx Cfg Low	The 16 LSBs of the sgmii Rx config register (if table value not used)
54	Sgmii Aux Cfg High	The 16 MSBs of the sgmii Aux config register (if table value not used)
56	Sgmii Aux Cfg Low	The 16 LSBs of the sgmii Aux config register (if table value not used)
58	Pkt PLL Config, MSW	The packet subsystem PLL configuration, MSW (unused in gauss)
60	Packet PLL Config, LSW	The packet subsystem PLL configuration, LSW

Figure 6-42. Ethernet Mode Boot Parameter Options Field

15 – 7	6 – 5	4	3 – 0
Reserved	Init Config	Skip Tx	Reserved

Table 6-87. Ethernet Options Field Descriptions

Name	Value	Description
Init Config	0b00	SERDES and SGMII are configured.
	0b01	SERDES and SGMII are NOT configured
	0b10	Reserved
	0b11	None of the Ethernet system hardware is configured.
Skip tx	0	Ethernet ready frame is sent once when the system is first ready to receive packets, and then roughly every 3 seconds until the first boot packet is accepted.
	1	Ethernet ready frame is not sent

Figure 6-43. SGMII Config Bit Field

15 – 6	5	4	3 – 0
Reserved	bypass	direct	Index

Table 6-88. SGMII Config Field Descriptions

Field	Value	Description
Index	0	Configure the SGMII as a master
	1	Configure the SGMII as a slave, or connected to a Phy
	2	Configure the SGMII as a forced link
	3	Configure the SGMII as mac to fiber
	4-15	Reserved
Direct	0	Configure the SGMII as directed in the index field
	1	Configure the SGMII using the advise ability and control fields in the boot parameter table, not based on the index field
Bypass	0	Configure the SGMII.
	1	Do not configure the SGMII.

Copyright © 2012–2016, Texas Instruments Incorporated

6.28.3.4 NAND Mode Boot Parameter Table

Table 6-89. NAND Mode Boot Parameter Table

Byte Offset	Name	Decription
12	Options	See Figure 6-44
14	I2cClkFreqKhz	The I2C clock frequency to use when using I2C tables
16	I2cTargetAddr	The I2C bus address of the EEPROM
18	I2cLocalAddr	The I2C bus address of the Appleton device
20	I2cDataAddr	The address on the EEPROM of the NAND configuration table
22	I2cWtoRDelay	Delay between addres writes and data reads, in I2C clock periods
24	csNum	The NAND chip-select region (0-3)
26	firstBlock	The first block of the boot image

Figure 6-44. NAND Boot Parameter Option Fields

15	1	0
Reserved		I2C

Table 6-90. NAND Boot Parameter Options Bit Field Descriptions

Name	Value	Description
I2C	0	NAND configuration is NOT read from I2C
	1	NAND configuration is read from the I2C

6.28.3.5 PCIE Mode Boot Parameter Table

Table 6-91. PCIe Mode Boot Parameter Table

Byte Offset	Name	Description
12	options	PCI configuration options (see Figure 6-45)
14	Address Width	PCI address width, can be 32 or 64
16	Serdes Frequency	Serdes frequency, in MBs. Currently only 2500 supported.
18	Reference clock	Reference clock frequency, in units of 10 kHz. Valid values are 10000 (100 MHz), 12500 (125 MHz), 15625 (156.25 MHz), 25000 (250 MHz) and 31250 (312.5 MHz), although other values should work.
20	Window 1 Size	Window 1 size, in Mbytes
22	Window 2 Size	Window 2 size, in Mbytes
24	Window 3 Size	Window 3 size, in Mbytes. Valid only if address width is 32.
26	Window 4 Size	Window 4 Size, in Mbytes Valid only if address width is 32.
28	Window 5 Size	Window 5 Size. Valid only if the address width is 32.
30	Vendor ID	Vendor ID field
32	Device ID	Device ID field (0xb006 by default for Gauss)
34	Class code Rev Id, MSW	Class code/revision ID field
36	Class code Rev Id, LSW	Class code/revision ID field
38	Serdes cfg msw	PCIe serdes config word, MSW
40	Serdes cfg lsw	PCIe serdes config word, LSW
42	Serdes lane 0 cfg msw	Serdes lane config word, msw lane 0
44	Serdes lane 0 cfg lsw	Serdes lane config word, lsw, lane 0
46	Serdes lane 1 cfg msw	Serdes lane config word, msw, lane 1
48	Serdes lane 1 cfg lsw	Serdes lane config word, lsw, lane 1

Figure 6-45. PCIe Options Bit Field

15 – 3	2	1	0
Reserved	Serdes Cfg	Cfg Disable	Reserved

Table 6-92. PCIe Options Field Descriptions

Field	Value	Description
Cfg disable	0	PCIe peripheral is configured by the boot rom
	1	PCIe peripheral is not configured by the boot rom
Serdes Cfg	0	Serdes PLL multiplier and rate fields in the table are used directly
	1	Serdes PLL multiplier and rate fields in the serdes registers will be overwritten based on the values in the serdes frequency and reference clock parameters.

Copyright © 2012–2016, Texas Instruments Incorporated

6.28.3.6 I2C Mode Boot Parameter Table

Table 6-93. I2C Mode Boot Parameter Table

Byte Offset	Name	Description
12	Options	See Figure 6-46
14	Boot Dev Addr	The I2C device address to boot from
16	Boot Dev Addr Ext	Extended boot device address, or I2C bus address (typically 0x50, 0x51)
18	Broadcast Addr	In master broadcast boot, this is the I2C address to send the boot data to
20	Local Address	The I2C address of this device.
22	Device Freq	The operating frequency of the device (MHz). Used to compute the divide down to the I2C module
24	Bus Frequency	The desired I2C data rate (kHz).
26	Next Dev Addr	The next device to boot from (used in boot config mode)
28	Next Dev Addr Ext	The extended next boot device address
30	Address Delay	The number of CPU cycles to delay between writing the address to an I2C EEPROM and reading data. This allows the I2C EEPROM time to load the data.

Figure 6-46. I2C Mode Boot Options Bitfield

15	2	1	0
Reserved		Mode	

Table 6-94. Register Description

Parameter	Value	Description
Mode	0	Load a boot parameter table from the I2C
	1	Load boot records from the I2C (boot tables)
	2	Load boot config records from the I2C (boot config tables)
	3	Perform a slave mode boot, listening on the local address specified in the table.

Copyright © 2012–2016, Texas Instruments Incorporated

6.28.3.7 SPI Mode Boot Parameter Table

Table 6-95. 2.5.3.7 SPI Mode Boot Parameter Table

Byte Offset	Name	Description
12	options	See Figure 6-47
14	Address Width	The number of bytes in the SPI device address. Can be 2 or 3 (16 or 24 bit)
16	NPin	The operational mode, 4 or 5 pin
18	Chipsel	The chip select used. Can be 0-3.
20	Mode	SPI mode, 0-3
22	C2T Delay	SPI chip select active to transmit start delay value (0-255)
24	CPU Freq MHz	The speed of the CPU, in MHz
26	Bus Freq, MHz	The MHz portion of the SPI bus frequency. Default = 5MHz
28	Bus Freq, kHz	The kHz portion of the SPI buf frequency. Default = 0
30	Read Addr MSW	The first address to read from, MSW (valid for 24 bit address width only)
32	Read Addr LSW	The first address to read from, LSW
34	Next chipsel	Chipsel value used after boot config table processing is complete
36	Next read MSW	The next read address, MSW after config table processing is complete
38	Next read LSW	The next read address, LSW after config table processing is complete

The bus frequency programmed into the SPI by the boot ROM is from the table: MHz.kHz. So for a 5.1 MHz bus frequency the MHz value is 5, the kHz value is 100.

Figure 6-47. SPI Options Field Bit Map

15	2	1	0
Reserved		Mode	

Table 6-96. SPI Options Field Description

Parameter	Value	Description
Mode	0	Load a boot parameter table from the SPI
	1	Load boot records from the SPI (boot tables)
	2	Load boot config records from the SPI (boot config tables)
	3	Reserved

Copyright © 2012–2016, Texas Instruments Incorporated

6.28.3.8 Hyperlink Mode Boot Parameter Table

Table 6-97. Hyperlink Mode Boot Parameter Table

Byte Offset	Name	Description
12	Options	See Figure 6-48
14	N lanes	The number of lanes to configure
16	Serdes Aux, MSW	SERDES Aux register config value, MSW
18	Serdes Aux, LSW	SERDES Aux register config value, LSW
20	Rx Lane 0, MSW	SERDES Rx Lane 0 register value, MSW
22	Rx Lane 0, LSW	SERDES Rx Lane 0 register value, LSW
24	Tx Lane 0, MSW	SERDES Tx Lane 0 register value, MSW
26	Tx Lane 0, LSW	SERDES Tx Lane 0 register value, LSW
28	Rx Lane 1, MSW	SERDES Rx Lane 1 register value, MSW
30	Rx Lane 1, LSW	SERDES Rx Lane 1 register value, LSW
32	Tx Lane 1, MSW	SERDES Tx Lane 1 register value, MSW
34	Tx Lane 1, LSW	SERDES Tx Lane 1 register value, LSW
36	Rx Lane 2, MSW	SERDES Rx Lane 2 register value, MSW
38	Rx Lane 2, LSW	SERDES Rx Lane 2 register value, LSW
40	Tx Lane 2, MSW	SERDES Tx Lane 2 register value, MSW
42	Tx Lane 2, LSW	SERDES Tx Lane 2 register value, LSW

Figure 6-48. Hyperlink Options Bit Field

15	2	1	0
Reserved		nonit	Rsvd

Table 6-98. Hyperlink Options Field Descriptions

Field	Value	Description
nonit	0	Initialize hyperlink peripheral
	1	Do not initialize hyperlink peripheral

Copyright © 2012–2016, Texas Instruments Incorporated

6.28.3.9 UART Mode Boot Parameter Table

Table 6-99. UART Mode Boot Parameter Table

Byte Offset	Field	Description
12	Rsvd	Reserved
14	Data Format	Only value 1, boot table format is supported
16	Protocol	Only value 0, XMODEM is supported
18	Initial Ping Cnt	Number of initial pings without reply before the boot times out
20	Max Err Count	Number of consecutive errors before the boot fails
22	Nack timeout	Time-out period waiting for an ack/nack, in milliseconds
24	Char timeout	Time-out period between characters
26	Data bits	Number of data bits. Only the value 8 is supported
28	Parity	0 = none, 1 = odd, 2 = even
30	Stop bits x2	Number of stop bits x2, (2 = 1 stop bit, 4 = 2 stop bits)
32	Oversample	The oversample factor. Only 13 and 16 are valid
34	Flow Control	Only 0, no flow control is supported.
36	Data Rate, MSW	The Baud rate, MSW
38	Data Rate, LSW	The Baud rate, LSW
40	timerRefMhz	Timer reference frequency, in MHz. In Gauss this is the frequency the device is operating at after the PLL is programmed.

Copyright © 2012–2016, Texas Instruments Incorporated

6.29 PLL Boot Configuration Settings

The PLL default settings are determined by the BOOTMODE[12:10] bits. Table 6-100 shows settings for various input clock frequencies.

Table 6-100. C66x DSP System PLL Configuration(1)

BOOTMODE [12:10]	INPUT CLOCK FREQ (MHz)	850 MHz DEVICE			1000 MHz DEVICE			1250 MHz DEVICE		
		PLLD	PLLM	DSP *f*	PLLD	PLLM	DSP *f*	PLLD	PLLM	DSP *f*
0b000	50.00	0	33	850	0	39	1000	0	49	1250
0b001	66.67	1	50	850.04	0	29	1000.05	1	74	1250.063
0b010	80.00	3	84	850	0	24	1000	3	124	1250
0b011	100.00	0	16	850	0	19	1000	0	24	1250
0b100	156.25	49	543	850	4	63	1000	0	15	1250
0b101	250.00	4	33	850	0	7	1000	0	9	1250
0b110	312.50	49	271	850	4	31	1000	0	7	1250
0b111	122.88	5	82	849.92	28	471	999.989	28	589	1249.986

(1) The PLL boot configuration table above may not include all the frequency values that the device supports.

OUTPUT_DIVIDE is the value of the field of SECCTL[22:19]. This will set the PLL to the maximum clock setting for the device (with OUTPUT_DIVIDE=2, by default).

- CLK = CLKIN × ((PLLM+1) ÷ ((OUTPUT_DIVIDE+1) × (PLLD+1)))

The Main PLL is controlled using a PLL controller and a chip-level MMR. The DDR3 PLL is controlled by chip level MMRs. For details on how to set up the PLL see Section 6.6. For details on the operation of the PLL controller module, see the Phase-Locked Loop (PLL) for KeyStone Devices User's Guide.

6.30 Second-Level Bootloaders

Any of the boot modes can be used to download a second-level bootloader. A second-level bootloader allows for any level of customization to current boot methods as well as the definition of a completely customized boot.

Copyright © 2012–2016, Texas Instruments Incorporated

7 C66x CorePac

The C66x CorePac consists of several components:

- The C66x DSP and associated C66x CorePac core
- Level-one and level-two memories (L1P, L1D, L2)
- Data Trace Formatter (DTF)
- Embedded Trace Buffer (ETB)
- Interrupt Controller
- Power-down controller
- External Memory Controller
- Extended Memory Controller
- A dedicated power/sleep controller (LPSC)

The C66x CorePac also provides support for memory protection, bandwidth management (for resources local to the C66x CorePac) and address extension. Figure 7-1 shows a block diagram of the C66x CorePac.

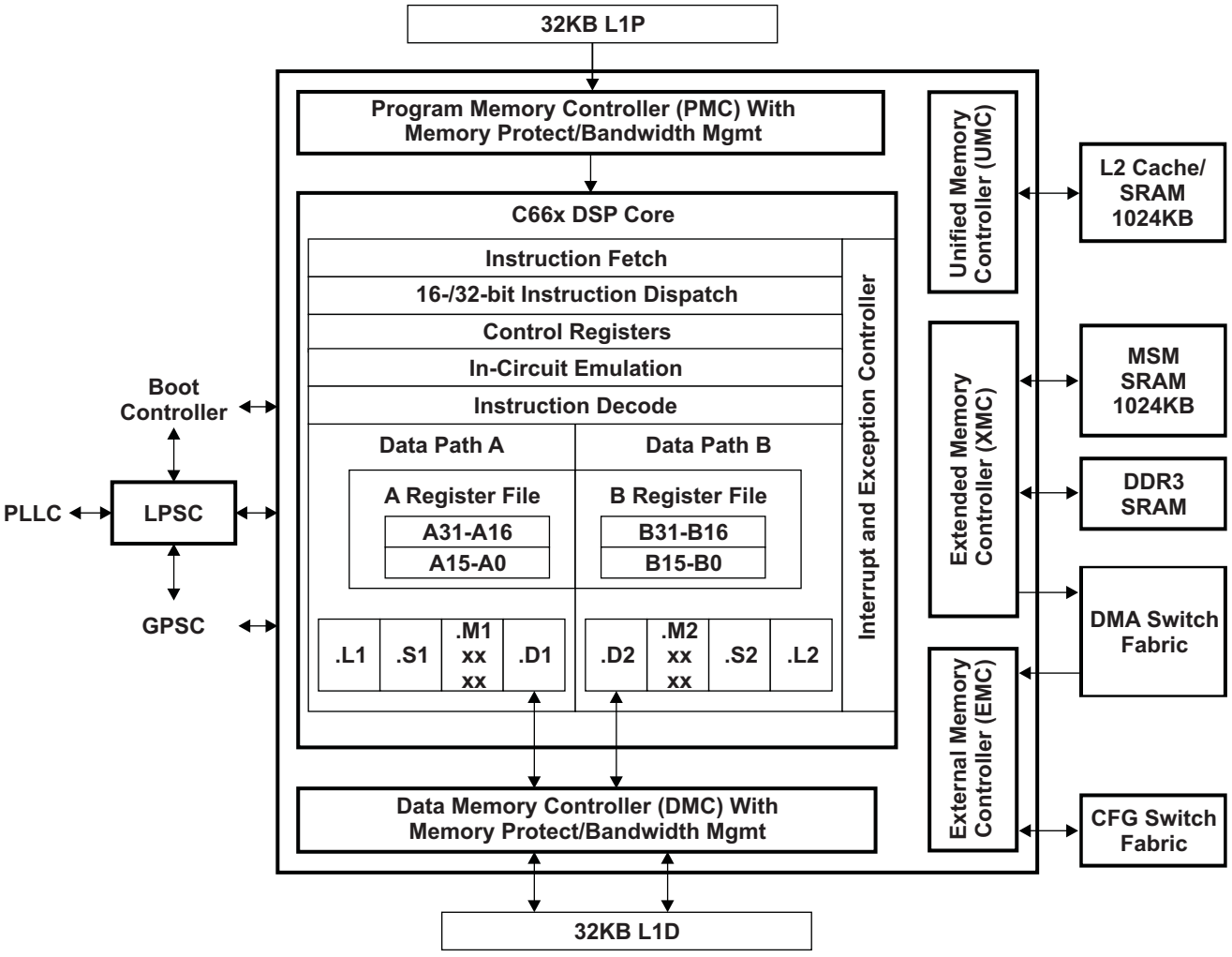

Figure 7-1. C66x CorePac Block Diagram

For more detailed information on the TMS320C66x CorePac on the C665x device, see the C66x CorePac User's Guide.

Copyright © 2012–2016, Texas Instruments Incorporated

7.1 Memory Architecture

Each C66x CorePac of the device contains a 1024KB level-2 memory (L2), a 32KB level-1 program memory (L1P), and a 32KB level-1 data memory (L1D). The C665x device also contain a 1024KB multicore shared memory (MSM). All memory on the C665x has a unique location in the memory map (see Table 6-63).

After device reset, L1P and L1D cache are configured as all cache, by default. The L1P and L1D cache can be reconfigured through software through the L1PMODE field of the L1P Configuration Register (L1PCFG) and the L1DMODE field of the L1D Configuration Register (L1DCFG) of the C66x CorePac. L1D is a two-way set-associative cache, while L1P is a direct-mapped cache.

The on-chip bootloader changes the reset configuration for L1P and L1D. For more information, see the Bootloader for the C66x DSP User's Guide.

For more information on the operation L1 and L2 caches, see the C66x DSP User's Guide.

7.1.1 L1P Memory

The L1P memory configuration for the C665x device is as follows:

- 32KB with no wait states

Figure 7-2 shows the available SRAM/cache configurations for L1P.

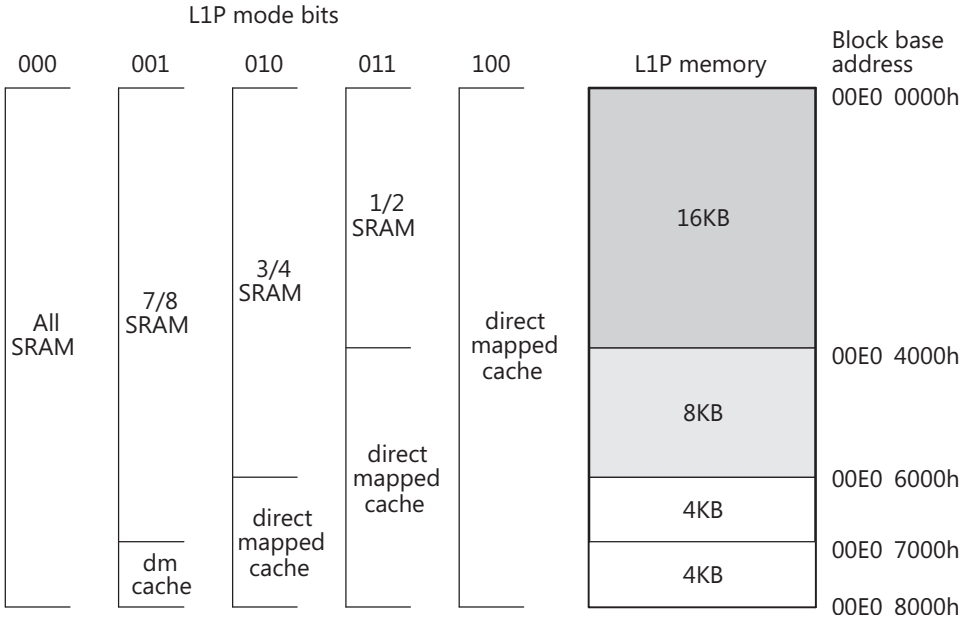

Figure 7-2. L1P Memory Configurations

7.1.2 L1D Memory

The L1D memory configuration for the C665x device is as follows:

- 32KB with no wait states

Figure 7-3 shows the available SRAM/cache configurations for L1D.

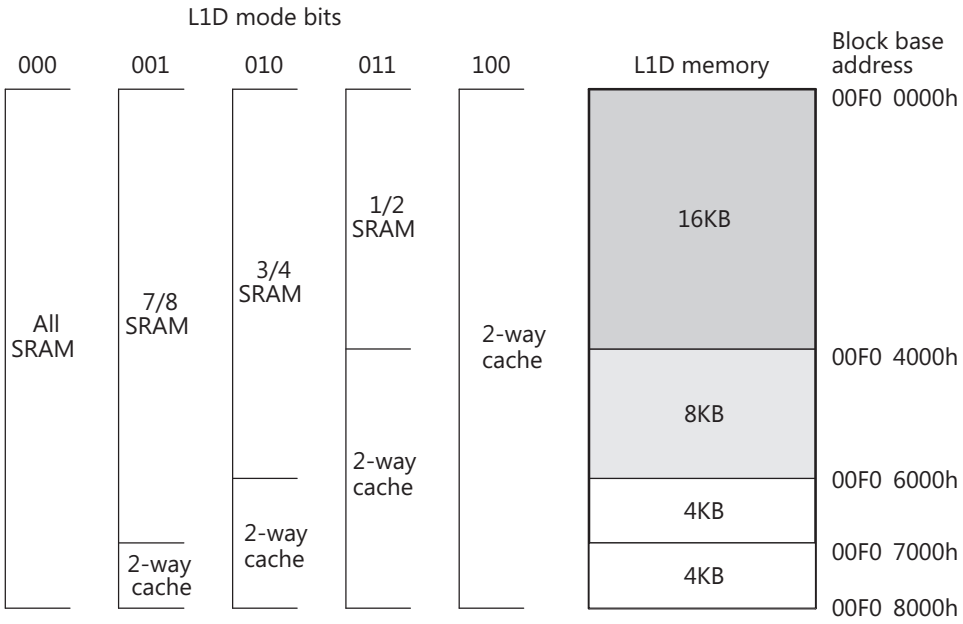

Figure 7-3. L1D Memory Configurations

Copyright © 2012–2016, Texas Instruments Incorporated

7.1.3 L2 Memory

The L2 memory configuration for the C665x device is as follows:

- Total memory is 1024KB (C6655) or 2048KB (C6657)
- Each core contains 1024KB of memory
- Local starting address for each core is 0080 0000h

L2 memory can be configured as all SRAM, all 4-way set-associative cache, or a mix of the two. The amount of L2 memory that is configured as cache is controlled through the L2MODE field of the L2 Configuration Register (L2CFG) of the C66x CorePac. Figure 7-4 shows the available SRAM/cache configurations for L2. By default, L2 is configured as all SRAM after device reset.

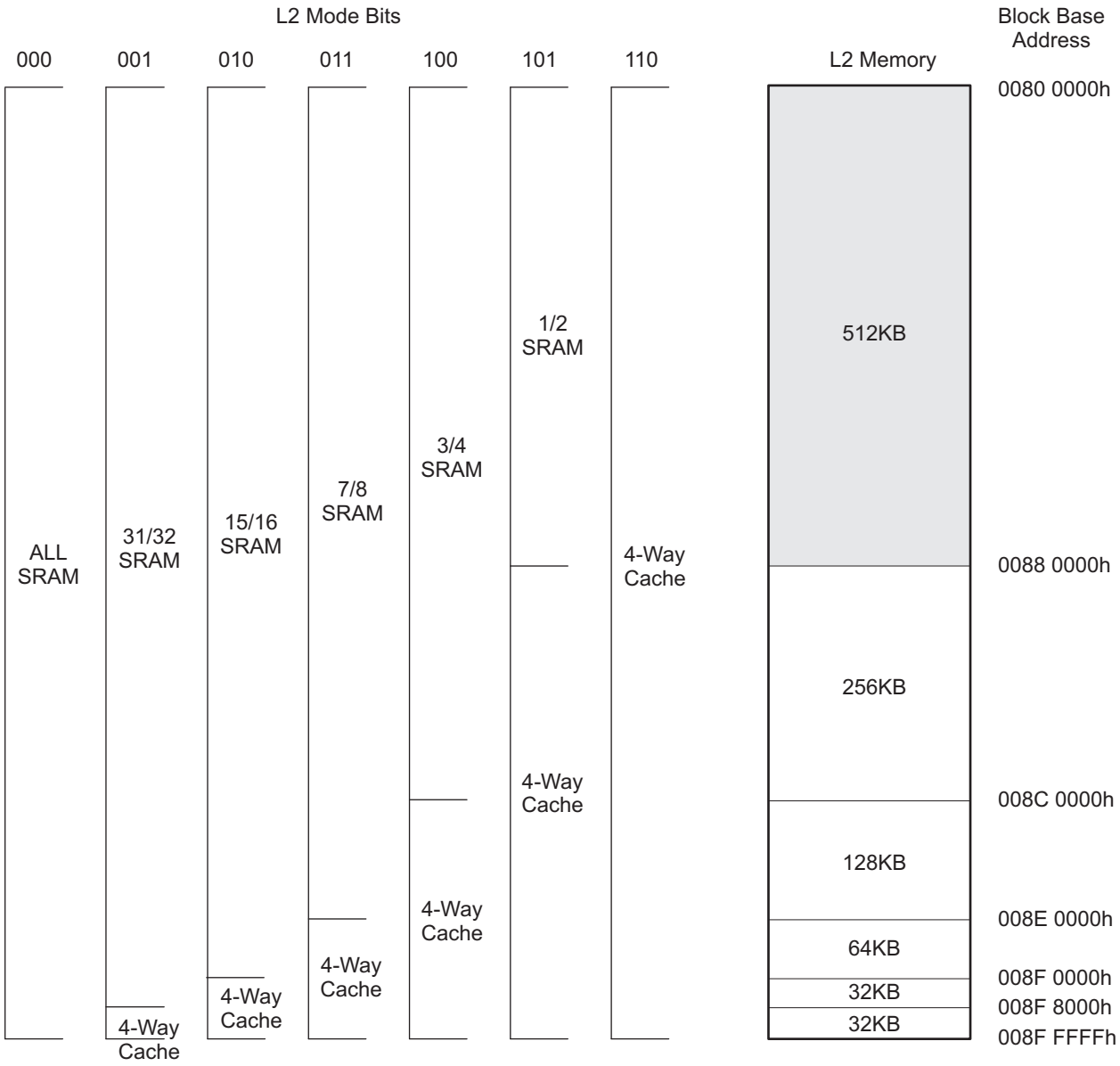

Figure 7-4. L2 Memory Configurations

Global addresses are accessible to all masters in the system. In addition, local memory can be accessed directly by the associated processor through aliased addresses, where the eight MSBs are masked to zero. The aliasing is handled within the C66x CorePac and allows for common code to be run unmodified on multiple cores. For example, address location 0x10800000 is the global base address for C66x CorePac Core 0's L2 memory. C66x CorePac Core 0 can access this location by either using 0x10800000 or 0x00800000. Any other master on the device must use 0x10800000 only. Conversely, 0x00800000 can by used by any of the cores as their own L2 base addresses.

For C66x CorePac Core 0, address 0x00800000 is equivalent to 0x10800000, and for C66x CorePac Core 1 (C6657 only) address 0x00800000 is equivalent to 0x11800000. Local addresses should be used only for shared code or data, allowing a single image to be included in memory. Any code/data targeted to a specific core, or a memory region allocated during run-time by a particular core should always use the global address only.

7.1.4 MSM SRAM

The MSM SRAM configuration for the device is as follows:

- Memory size is 1024KB
- The MSM SRAM can be configured as shared L2 and/or shared L3 memory
- Allows extension of external addresses from 2GB to up to 8GB
- Has built in memory protection features

The MSM SRAM is always configured as all SRAM. When configured as a shared L2, its contents can be cached in L1P and L1D. When configured in shared L3 mode, it's contents can be cached in L2 also. For more details on external memory address extension and memory protection features, see the Multicore Shared Memory Controller (MSMC) for KeyStone Devices User's Guide.

7.1.5 L3 Memory

The L3 ROM on the device is 128KB. The ROM contains software used to boot the device. There is no requirement to block accesses from this portion to the ROM.

7.2 Memory Protection

Memory protection allows an operating system to define who or what is authorized to access L1D, L1P, and L2 memory. To accomplish this, the L1D, L1P, and L2 memories are divided into pages. There are 16 pages of L1P (2KB each), 16 pages of L1D (2KB each), and 32 pages of L2 (16KB each). The L1D, L1P, and L2 memory controllers in the C66x CorePac are equipped with a set of registers that specify the permissions for each memory page.

Each page may be assigned with fully orthogonal user and supervisor read, write, and execute permissions. In addition, a page may be marked as either (or both) locally accessible or globally accessible. A local access is a direct DSP access to L1D, L1P, and L2, while a global access is initiated by a DMA (either IDMA or the EDMA3) or by other system masters. EDMA or IDMA transfers programmed by the DSP count as global accesses.

The DSP and each of the system masters on the device are all assigned a privilege ID. It is possible to specify whether memory pages are locally or globally accessible.

The AIDx and LOCAL bits of the memory protection page attribute registers specify the memory page protection scheme, see Table 7-1.

Copyright © 2012–2016, Texas Instruments Incorporated

Table 7-1. Available Memory Page Protection Schemes

AIDx BIT	LOCAL BIT	DESCRIPTION
0	0	No access to memory page is permitted.
0	1	Only direct access by DSP is permitted.
1	0	Only accesses by system masters and IDMA are permitted (includes EDMA and IDMA accesses initiated by the DSP).
1	1	All accesses permitted.

Faults are handled by software in an interrupt (or an exception, programmable within the C66x CorePac interrupt controller) service routine. A DSP or DMA access to a page without the proper permissions will:

- Block the access — reads return 0, writes are ignored
- Capture the initiator in a status register — ID, address, and access type are stored
- Signal event to DSP interrupt controller

The software is responsible for taking corrective action to respond to the event and resetting the error status in the memory controller. For more information on memory protection for L1D, L1P, and L2, see the C66x CorePac User's Guide.

7.3 Bandwidth Management

When multiple requestors contend for a single C66x CorePac resource, the conflict is resolved by granting access to the highest priority requestor. The following four resources are managed by the Bandwidth Management control hardware:

- Level 1 Program (L1P) SRAM/Cache
- Level 1 Data (L1D) SRAM/Cache
- Level 2 (L2) SRAM/Cache
- Memory-mapped registers configuration bus

The priority level for operations initiated within the C66x CorePac are declared through registers in the C66x CorePac. These operations are:

- DSP-initiated transfers
- User-programmed cache coherency operations
- IDMA-initiated transfers

The priority level for operations initiated outside the C66x CorePac by system peripherals is declared through the Priority Allocation Register (PRI_ALLOC), see Section 9.4 for more details. System peripherals with no fields in the PRI_ALLOC have their own registers to program their priorities.

More information on the bandwidth management features of the C66x CorePac can be found in the C66x CorePac User's Guide.

7.4 Power-Down Control

The C66x CorePac supports the ability to power down various parts of the C66x CorePac. The power down controller (PDC) of the C66x CorePac can be used to power down L1P, the cache control hardware, the DSP, and the entire C66x CorePac. These power-down features can be used to design systems for lower overall system power requirements.

NOTE

The C665x does not support power-down modes for the L2 memory at this time.

More information on the power-down features of the C66x CorePac can be found in the C66x CorePac User's Guide.

Copyright © 2012–2016, Texas Instruments Incorporated

7.5 C66x CorePac Revision

The version and revision of the C66x CorePac can be read from the CorePac Revision ID Register (MM_REVID) located at address 0181 2000h. The MM_REVID register is shown in Figure 7-5 and described in Table 7-2. The C66x CorePac revision is dependent on the silicon revision being used.

Figure 7-5. CorePac Revision ID Register (MM_REVID) Address - 0181 2000h

31	16	15	0
VERSION		REVISION	
R-n		R-n	

Legend: R = Read; *-n* = value after reset

Table 7-2. CorePac Revision ID Register (MM_REVID) Field Descriptions

BIT	FIELD	DESCRIPTION
31-16	VERSION	Version of the C66x CorePac implemented on the device.
15-0	REVISION	Revision of the C66x CorePac version implemented on the device.

7.6 C66x CorePac Register Descriptions

See the C66x CorePac User's Guide for register offsets and definitions.

Copyright © 2012–2016, Texas Instruments Incorporated

8 Device Configuration

On the C665x device, certain device configurations like boot mode and endianness, are selected at device power-on reset. The status of the peripherals (enabled or disabled) is determined after device power-on reset.

8.1 Device Configuration at Device Reset

Table 8-1 describes the device configuration pins. The logic level is latched at power-on reset to determine the device configuration. The logic level on the device configuration pins can be set by using external pullup or pulldown resistors or by using some control device (for example, FPGA/CPLD) to intelligently drive these pins. When using a control device, ensure there is no contention on the lines when the device is out of reset. The device configuration pins are sampled during power-on reset and are driven after the reset is removed. To avoid contention, the control device must stop driving the device configuration pins of the DSP. And when driving by a control device, the control device must be fully powered and out of reset and driving the pins before the DSP can be taken out of reset.

Most of the device configuration pins are shared with other function pins (LENDIAN/GPIO[0], BOOTMODE[12:0]/GPIO[13:1], PCIESSMODE[1:0]/GPIO[15:14], and PCIESSEN/TIMI0). Some time must be given following the rising edge of reset to drive these device configuration input pins before they assume an output state (those GPIO pins should not become outputs during boot). Also be aware that systems using TIMI0 (the pin shared with PCIESSEN) as a clock input must assure that the clock is disabled from the input until after reset is released and a control device is no longer driving that input.

NOTE

If a configuration pin must be routed out from the device and it is not driven (Hi-Z state), the internal pullup or pulldown (IPU/IPD) resistor should not be relied upon. TI recommends the use of an external pullup or pulldown resistor. For more detailed information on pullup or pulldown resistors and situations in which external pullup or pulldown resistors are required, see Section 8.4.

Table 8-1. C665x Device Configuration Pins

CONFIGURATION PIN	PIN NO.	IPD/IPU(1)	FUNCTIONAL DESCRIPTION
LENDIAN(1)(2)	T25	IPU	Device endian mode (LENDIAN). • 0 = Device operates in big-endian mode • 1 = Device operates in little-endian mode
BOOTMODE[12:0](1)(2)	R25, R3, U25, T23, U24, T22, R21, U22, U23, V23, U21, T21, V22	IPD	Method of boot. Some pins may not be used by bootloader and can be used as general purpose config pins. See Bootloader for the C66x DSP User's Guide for how to determine the device enumeration ID value.
PCIESSMODE[1:0](1)(2)	W21, V21	IPD	PCIe Subsystem mode selection. • 00 = PCIe in end point mode • 01 = PCIe legacy end point (support for legacy INTx) • 10 = PCIe in root complex mode • 11 = Reserved
PCIESSEN(1)(2)	AD20	IPD	PCIe subsystem enable/disable. • 0 = PCIE Subsystem is disabled • 1 = PCIE Subsystem is enabled

(1) Internal 100-µA pulldown or pullup is provided for this terminal. In most systems, a 1-kΩ resistor can be used to oppose the IPD/IPU. For more detailed information on pulldown or pullup resistors and situations in which external pulldown or pullup resistors are required, see Section 8.4.
(2) These signal names are the secondary functions of these pins.

Copyright © 2012–2016, Texas Instruments Incorporated

8.2 Peripheral Selection After Device Reset

Several of the peripherals on the C665x are controlled by the Power Sleep Controller (PSC). By default, the PCIe, SRIO, and HyperLink are held in reset and clock-gated. The memories in these modules are also in a low-leakage sleep mode. Software is required to turn these memories on. The software enables the modules (turns on clocks and deasserts reset) before these modules can be used.

If one of the above modules is used in the selected ROM boot mode, the ROM code will automatically enable the module.

All other modules come up enabled by default and there is no special software sequence to enable. For more detailed information on the PSC use, see the Power Sleep Controller (PSC) for KeyStone Devices User's Guide.

8.3 Device State Control Registers

The C665x device has a set of registers that are used to provide the status or configure certain parts of its peripherals. Table 8-2 lists these registers.

Table 8-2. Device State Control Registers

ADDRESS START	ADDRESS END	SIZE	FIELD	DESCRIPTION
0x02620000	0x02620007	8B	Reserved	
0x02620008	0x02620017	16B	Reserved	
0x02620018	0x0262001B	4B	JTAGID	See Section 8.3.3.
0x0262001C	0x0262001F	4B	Reserved	
0x02620020	0x02620023	4B	DEVSTAT	See Section 8.3.1.
0x02620024	0x02620037	20B	Reserved	
0x02620038	0x0262003B	4B	KICK0	See Section 8.3.4.
0x0262003C	0x0262003F	4B	KICK1	
0x02620040	0x02620043	4B	DSP_BOOT_ADDR0	The boot address for C66x DSP CorePac0
0x02620044	0x02620047	4B	DSP_BOOT_ADDR1	The boot address for C66x DSP CorePac1 (C6657) or Reserved (C6655)
0x02620048	0x0262004B	4B	Reserved	
0x0262004C	0x0262004F	4B	Reserved	
0x02620050	0x02620053	4B	Reserved	
0x02620054	0x02620057	4B	Reserved	
0x02620058	0x0262005B	4B	Reserved	
0x0262005C	0x0262005F	4B	Reserved	
0x02620060	0x026200DF	128B	Reserved	
0x026200E0	0x0262010F	48B	Reserved	
0x02620110	0x02620117	8B	MACID	See Section 6.15.
0x02620118	0x0262012F	24B	Reserved	
0x02620130	0x02620133	4B	LRSTNMIPINSTAT_CLR	See Section 8.3.6.
0x02620134	0x02620137	4B	RESET_STAT_CLR	See Section 8.3.8.
0x02620138	0x0262013B	4B	Reserved	
0x0262013C	0x0262013F	4B	BOOTCOMPLETE	See Section 8.3.9.
0x02620140	0x02620143	4B	Reserved	
0x02620144	0x02620147	4B	RESET_STAT	See Section 8.3.7.
0x02620148	0x0262014B	4B	LRSTNMIPINSTAT	See Section 8.3.5.
0x0262014C	0x0262014F	4B	DEVCFG	See Section 8.3.2.
0x02620150	0x02620153	4B	PWRSTATECTL	See Section 8.3.10.
0x02620154	0x02620157	4B	SRIO_SERDES_STS	See Section 10.3.

Copyright © 2012–2016, Texas Instruments Incorporated

Table 8-2. Device State Control Registers (continued)

ADDRESS START	ADDRESS END	SIZE	FIELD	DESCRIPTION
0x02620158	0x0262015B	4B	SGMII_SERDES_STS	See Section 10.3.
0x0262015C	0x0262015F	4B	PCIE_SERDES_STS	
0x02620160	0x02620163	4B	HYPERLINK_SERDES_STS	See Section 10.3.
0x02620164	0x02620167	4B	Reserved	
0x02620168	0x0262016B	4B	Reserved	
0x0262016C	0x0262016F	4B	UPP_CLOCK	See Section 8.3.22.
0x02620170	0x02620183	20B	Reserved	
0x02620184	0x0262018F	12B	Reserved	
0x02620190	0x02620193	4B	Reserved	
0x02620194	0x02620197	4B	Reserved	
0x02620198	0x0262019B	4B	Reserved	
0x0262019C	0x0262019F	4B	Reserved	
0x026201A0	0x026201A3	4B	Reserved	
0x026201A4	0x026201A7	4B	Reserved	
0x026201A8	0x026201AB	4B	Reserved	
0x026201AC	0x026201AF	4B	Reserved	
0x026201B0	0x026201B3	4B	Reserved	
0x026201B4	0x026201B7	4B	Reserved	
0x026201B8	0x026201BB	4B	Reserved	
0x026201BC	0x026201BF	4B	Reserved	
0x026201C0	0x026201C3	4B	Reserved	
0x026201C4	0x026201C7	4B	Reserved	
0x026201C8	0x026201CB	4B	Reserved	
0x026201CC	0x026201CF	4B	Reserved	
0x026201D0	0x026201FF	48B	Reserved	
0x02620200	0x02620203	4B	NMIGR0	See Section 8.3.11.
0x02620204	0x02620207	4B	NMIGR1	See Section 8.3.11.(C6657) or Reserved (C6655))
0x02620208	0x0262020B	4B	Reserved	
0x0262020C	0x0262020F	4B	Reserved	
0x02620210	0x02620213	4B	Reserved	
0x02620214	0x02620217	4B	Reserved	
0x02620218	0x0262021B	4B	Reserved	
0x0262021C	0x0262021F	4B	Reserved	
0x02620220	0x0262023F	32B	Reserved	
0x02620240	0x02620243	4B	IPCGR0	See Section 8.3.12.
0x02620244	0x02620247	4B	IPCGR1	See Section 8.3.12. (C6657) or Reserved (C6655))
0x02620248	0x0262024B	4B	Reserved	
0x0262024C	0x0262024F	4B	Reserved	
0x02620250	0x02620253	4B	Reserved	
0x02620254	0x02620257	4B	Reserved	
0x02620258	0x0262025B	4B	Reserved	
0x0262025C	0x0262025F	4B	Reserved	
0x02620260	0x0262027B	28B	Reserved	
0x0262027C	0x0262027F	4B	IPCGRH	See Section 8.3.14.
0x02620280	0x02620283	4B	IPCAR0	See Section 8.3.13.
0x02620284	0x02620287	4B	IPCAR1	See Section 8.3.13. (C6657) or Reserved (C6655))
0x02620288	0x0262028B	4B	Reserved	

Copyright © 2012–2016, Texas Instruments Incorporated

Table 8-2. Device State Control Registers (continued)

ADDRESS START	ADDRESS END	SIZE	FIELD	DESCRIPTION
0x0262028C	0x0262028F	4B	Reserved	
0x02620290	0x02620293	4B	Reserved	
0x02620294	0x02620297	4B	Reserved	
0x02620298	0x0262029B	4B	Reserved	
0x0262029C	0x0262029F	4B	Reserved	
0x026202A0	0x026202BB	28B	Reserved	
0x026202BC	0x026202BF	4B	IPCARH	See Section 8.3.15.
0x026202C0	0x026202FF	64B	Reserved	
0x02620300	0x02620303	4B	TINPSEL	See Section 8.3.16.
0x02620304	0x02620307	4B	TOUTPSEL	See Section 8.3.17.
0x02620308	0x0262030B	4B	RSTMUX0	See Section 8.3.18.
0x0262030C	0x0262030F	4B	RSTMUX1	See Section 8.3.18. (C6657) or Reserved (C6655))
0x02620310	0x02620313	4B	Reserved	
0x02620314	0x02620317	4B	Reserved	
0x02620318	0x0262031B	4B	Reserved	
0x0262031C	0x0262031F	4B	Reserved	
0x02620320	0x02620323	4B	Reserved	
0x02620324	0x02620327	4B	Reserved	
0x02620328	0x0262032B	4B	MAINPLLCTL0	See Section 6.6.
0x0262032C	0x0262032F	4B	MAINPLLCTL1	
0x02620330	0x02620333	4B	DDR3PLLCTL0	See Section 6.7.
0x02620334	0x02620337	4B	DDR3PLLCTL1	
0x02620338	0x0262033B	4B	Reserved	
0x0262033C	0x0262033F	4B	Reserved	
0x02620340	0x02620343	4B	SGMII_SERDES_CFGPLL	See Section 10.3.
0x02620344	0x02620347	4B	SGMII_SERDES_CFGRX0	
0x02620348	0x0262034B	4B	SGMII_SERDES_CFGTX0	
0x0262034C	0x0262034F	4B	Reserved	
0x02620350	0x02620353	4B	Reserved	
0x02620354	0x02620357	4B	Reserved	
0x02620358	0x0262035B	4B	PCIE_SERDES_CFGPLL	
0x0262035C	0x0262035F	4B	Reserved	
0x02620360	0x02620363	4B	SRIO_SERDES_CFGPLL	See Section 10.3.
0x02620364	0x02620367	4B	SRIO_SERDES_CFGRX0	
0x02620368	0x0262036B	4B	SRIO_SERDES_CFGTX0	
0x0262036C	0x0262036F	4B	SRIO_SERDES_CFGRX1	
0x02620370	0x02620373	4B	SRIO_SERDES_CFGTX1	
0x02620374	0x02620377	4B	SRIO_SERDES_CFGRX2	
0x02620378	0x0262037B	4B	SRIO_SERDES_CFGTX2	
0x0262037C	0x0262037F	4B	SRIO_SERDES_CFGRX3	
0x02620380	0x02620383	4B	SRIO_SERDES_CFGTX3	
0x02620384	0x02620387	8B	Reserved	
0x02620388	0x026203AF	28B	Reserved	
0x026203B0	0x026203B3	4B	Reserved	

Copyright © 2012–2016, Texas Instruments Incorporated

Table 8-2. Device State Control Registers (continued)

ADDRESS START	ADDRESS END	SIZE	FIELD	DESCRIPTION
0x026203B4	0x026203B7	4B	HYPERLINK_SERDES_CFG PLL	See Section 10.3.
0x026203B8	0x026203BB	4B	HYPERLINK_SERDES_CFG RX0	
0x026203BC	0x026203BF	4B	HYPERLINK_SERDES_CFG TX0	
0x026203C0	0x026203C3	4B	HYPERLINK_SERDES_CFG RX1	
0x026203C4	0x026203C7	4B	HYPERLINK_SERDES_CFG TX1	
0x026203C8	0x026203CB	4B	HYPERLINK_SERDES_CFG RX2	
0x026203CC	0x026203CF	4B	HYPERLINK_SERDES_CFG TX2	
0x026203D0	0x026203D3	4B	HYPERLINK_SERDES_CFG RX3	
0x026203D4	0x026203D7	4B	HYPERLINK_SERDES_CFG TX3	
0x026203D8	0x026203DB	4B	Reserved	
0x026203DC	0x026203F7	28B	Reserved	
0x026203F8	0x026203FB	4B	DEVSPEED	See Section 8.3.19.
0x026203FC	0x026203FF	4B	Reserved	
0x02620400	0x02620403	4B	CHIP_MISC_CTL	See Section 9.4.
0x02620404	0x02620467	100B	Reserved	
0x02620468	0x0262057f	280B	Reserved	
0x02620580	0x02620583	4B	PIN_CONTROL_0	See Section 8.3.20.
0x02620584	0x02620587	4B	PIN_CONTROL_1	See Section 8.3.21.
0x02620588	0x0262058B	4B	EMAC_UPP_PRI_ALLOC	See Section 9.4.

Copyright © 2012–2016, Texas Instruments Incorporated

8.3.1 Device Status Register

The Device Status Register depicts the device configuration selected upon a power-on reset by either the $\overline{\text{POR}}$ or $\overline{\text{RESETFULL}}$ pin. Once set, these bits will remain set until the next power-on reset. The Device Status Register is shown in Figure 8-1 and described in Table 8-3.

Figure 8-1. Device Status Register

31	17	16	15	14	13	1	0
Reserved		PCIESSEN	PCIESSMODE [1:0]		BOOTMODE[12:0]		LENDIAN
R-0		R-x	R/W-xx		R/W-xxxxxxxxxxxx		R-x(1)

Legend: R = Read only; RW = Read/Write; -*n* = value after reset

(1) x indicates the bootstrap value latched through the external pin

Table 8-3. Device Status Register Field Descriptions

BIT	FIELD	DESCRIPTION
31-17	Reserved	Reserved. Read only, writes have no effect.
16	PCIESSEN	PCIe module enable • 0 = PCIe module disabled • 1 = PCIe module enabled
15-14	PCIESSMODE[1:0]	PCIe Mode selection pins • 00b = PCIe in End-point mode • 01b = PCIe in Legacy End-point mode (support for legacy INTx) • 10b = PCIe in Root complex mode • 11b = Reserved
13-1	BOOTMODE[12:0]	Determines the bootmode configured for the device. For more information on bootmode, see Section 6.28 and see the Bootloader for the C66x DSP User's Guide
0	LENDIAN	Device Endian mode (LENDIAN) — Shows the status of whether the system is operating in Big Endian mode or Little Endian mode. • 0 = System is operating in Big Endian mode • 1 = System is operating in Little Endian mode

Copyright © 2012–2016, Texas Instruments Incorporated

8.3.2 Device Configuration Register

The Device Configuration Register is one-time writeable through software. The register is reset on all hard resets and is locked after the first write. The Device Configuration Register is shown in Figure 8-2 and described in Table 8-4.

Figure 8-2. Device Configuration Register (DEVCFG)

31	1	0
Reserved		SYSCLKOUTEN
R-0		R/W-1

Legend: R = Read only; RW = Read/Write; -n = value after reset

Table 8-4. Device Configuration Register Field Descriptions

BIT	FIELD	DESCRIPTION
31-1	Reserved	Reserved. Read only, writes have no effect.
0	SYSCLKOUTEN	SYSCLKOUT Enable • 0 = No clock output • 1 = Clock output enabled (default)

8.3.3 JTAG ID (JTAGID) Register Description

The JTAG ID register is a read-only register that identifies to the customer the JTAG/Device ID. For the device, the JTAG ID register resides at address location 0x0262 0018. The JTAG ID Register is shown in Figure 8-3 and described in Table 8-5.

Figure 8-3. JTAG ID (JTAGID) Register

31 28	27 12	11 1	0
VARIANT	PART NUMBER	MANUFACTURER	LSB
R-xxxxb	R-1011 1001 0111 1010b	0000 0010 111b	R-1

Legend: RW = Read/Write; R = Read only; -n = value after reset

Table 8-5. JTAG ID Register Field Descriptions

BIT	FIELD	VALUE	DESCRIPTION
31-28	VARIANT	xxxxb	Variant (4-Bit) value.
27-12	PART NUMBER	1011 1001 0111 1010b	Part Number for boundary scan
11-1	MANUFACTURER	0000 0010 111b	Manufacturer
0	LSB	1b	This bit is read as a 1 for C665x

NOTE

The value of the VARIANT and PART NUMBER fields depend on the silicon revision. See the Silicon Errata for details.

Copyright © 2012–2016, Texas Instruments Incorporated

8.3.4 Kicker Mechanism (KICK0 and KICK1) Register

The Bootcfg module contains a kicker mechanism to prevent any spurious writes from changing any of the Bootcfg MMR values. When the kicker is locked (which it is initially after power on reset), none of the Bootcfg MMRs are writable (they are only readable). On the C665x, the exceptions to this are the IPC registers such as IPCGRx and IPCARx. These registers are not protected by the kicker mechanism. This mechanism requires two MMR writes to the KICK0 and KICK1 registers with exact data values before the kicker lock mechanism is unlocked. See Table 8-2 for the address location. Once released, then all the Bootcfg MMRs having write permissions are writable (the read only MMRs are still read only). The first KICK0 data is 0x83e70b13. The second KICK1 data is 0x95a4f1e0. Writing any other data value to either of these kick MMRs will lock the kicker mechanism and block any writes to Bootcfg MMRs. To ensure protection of all Bootcfg MMRs, software must always relock the kicker mechanism after completing the MMR writes.

8.3.5 LRESETNMI PIN Status (LRSTNMIPINSTAT) Register

The LRSTNMIPINSTAT Register is created in Boot Configuration to latch the status of $\overline{\text{LRESET}}$ and $\overline{\text{NMI}}$ based on CORESEL. The LRESETNMI PIN Status Register is shown in Figure 8-4 and described in Table 8-6.

Figure 8-4. LRESETNMI PIN Status Register (LRSTNMIPINSTAT)

31	18	17	16	15	2	1	0
Reserved		NMI1/Reserved	NMI0	Reserved		LR1	LR0
R, +0000 0000		R,+0	R,+0	R, +0000 0000		R,+0	R,+0

Legend: R = Read only; -*n* = value after reset;

Table 8-6. LRESETNMI PIN Status Register (LRSTNMIPINSTAT) Field Descriptions

BIT	FIELD	DESCRIPTION
31-18	Reserved	Reserved
17	NMI1/Reserved	CorePac1 in NMI (C6657) or Reserved (C6655)
16	NMI0	CorePac0 in NMI
15-2	Reserved	Reserved
1	LR1/Reserved	CorePac1 in Local Reset (C6657) or Reserved (C6655)
0	LR0	CorePac0 in Local Reset

Copyright © 2012–2016, Texas Instruments Incorporated

8.3.6 LRESETNMI PIN Status Clear (LRSTNMIPINSTAT_CLR) Register

The LRSTNMIPINSTAT_CLR Register is used to clear the status of $\overline{\text{LRESET}}$ and $\overline{\text{NMI}}$ based on CORESEL. The LRESETNMI PIN Status Clear Register is shown in Figure 8-5 and described in Table 8-7.

Figure 8-5. LRESETNMI PIN Status Clear Register (LRSTNMIPINSTAT_CLR)

31	18	17	16	15	2	1	0
Reserved		NMI1/Reserved	NMI0	Reserved		LR1/Reserved	LR0
R, +0000 0000		WC,+0	WC,+0	R, +0000 0000		WC,+0	WC,+0

Legend: R = Read only; -*n* = value after reset; WC = Write 1 to Clear

Table 8-7. LRESETNMI PIN Status Clear Register (LRSTNMIPINSTAT_CLR) Field Descriptions

BIT	FIELD	DESCRIPTION
31-18	Reserved	Reserved
17	NMI1/Reserved	CorePac1 in NMI Clear (C6657) or Reserved (C6655)
16	NMI0	CorePac0 in NMI Clear
15-2	Reserved	Reserved
1	LR1/Reserved	CorePac1 in Local Reset Clear (C6657) or Reserved (C6655)
0	LR0	CorePac0 in Local Reset Clear

Copyright © 2012–2016, Texas Instruments Incorporated

8.3.7 Reset Status (RESET_STAT) Register

The reset status register (RESET_STAT) captures the status of Local reset (LRx) for each of the cores and also the global device reset (GR). Software can use this information to take different device initialization steps, if desired.

- In case of Local reset: The LRx bits are written as 1 and GR bit is written as 0 only when the CorePac receives a local reset without receiving a global reset.
- In case of Global reset: The LRx bits are written as 0 and GR bit is written as 1 only when a global reset is asserted.

The Reset Status Register is shown in Figure 8-6 and described in Table 8-8.

Figure 8-6. Reset Status Register (RESET_STAT)

31	30	2	1	0
GR	Reserved		LR1/Reserved	LR0
R, +1	R, + 000 0000 0000 0000 0000 0000		R,+0	R,+0

Legend: R = Read only; -*n* = value after reset

Table 8-8. Reset Status Register (RESET_STAT) Field Descriptions

BIT	FIELD	DESCRIPTION
31	GR	Global reset status • 0 = Device has not received a global reset. • 1 = Device received a global reset.
30-2	Reserved	Reserved.
1	LR1/Reserved	CorePac1 reset status (C6657) or Reserved (C6655) • 0 = CorePac1 has not received a local reset. • 1 = CorePac1 received a local reset.
0	LR0	CorePac0 reset status • 0 = CorePac0 has not received a local reset. • 1 = CorePac0 received a local reset.

Copyright © 2012–2016, Texas Instruments Incorporated

8.3.8 Reset Status Clear (RESET_STAT_CLR) Register

The RESET_STAT bits can be cleared by writing 1 to the corresponding bit in the RESET_STAT_CLR register. The Reset Status Clear Register is shown in Figure 8-7 and described in Table 8-9.

Figure 8-7. Reset Status Clear Register (RESET_STAT_CLR)

31	30	2	1	0
GR	Reserved		LR1/Reserved	LR0
RW, +0	R, + 000 0000 0000 0000 0000 0000		RW,+0	RW,+0

Legend: R = Read only; RW = Read/Write; -*n* = value after reset

Table 8-9. Reset Status Clear Register (RESET_STAT_CLR) Field Descriptions

BIT	FIELD	DESCRIPTION
31	GR	Global reset clear bit • 0 = Writing 0 has no effect. • 1 = Writing 1 to the GR bit clears the corresponding bit in the RESET_STAT register.
30-2	Reserved	Reserved.
1	LR1/Reserved	CorePac1 reset clear bit (C6657) or Reserved (C6655) • 0 = Writing 0 has no effect. • 1 = Writing 1 to the LR1 bit clears the corresponding bit in the RESET_STAT register.
0	LR0	CorePac0 reset clear bit • 0 = Writing 0 has no effect. • 1 = Writing 1 to the LR0 bit clears the corresponding bit in the RESET_STAT register.

Copyright © 2012–2016, Texas Instruments Incorporated

8.3.9 Boot Complete (BOOTCOMPLETE) Register

The BOOTCOMPLETE register controls the BOOTCOMPLETE pin status. The purpose is to indicate the completion of the ROM booting process. The Boot Complete Register is shown in Figure 8-8 and described Table 8-10.

Figure 8-8. Boot Complete Register (BOOTCOMPLETE)

31	2	1	0
Reserved		BC1/Reserved	BC0
R, + 0000 0000 0000 0000 0000 0000		RW,+0	RW,+0

Legend: R = Read only; RW = Read/Write; -*n* = value after reset

Table 8-10. Boot Complete Register (BOOTCOMPLETE) Field Descriptions

BIT	FIELD	DESCRIPTION
31-2	Reserved	Reserved.
1	BC1	CorePac1 boot status (C6657) or Reserved (C6655) • 0 = CorePac1 boot NOT complete • 1 = CorePac1 boot complete
0	BC0	CorePac0 boot status • 0 = CorePac0 boot NOT complete • 1 = CorePac0 boot complete

The BCx bit indicates the boot complete status of the corresponding core. All BCx bits will be sticky bits — that is, they can be set only once by the software after device reset and they will be cleared to 0 on all device resets.

Boot ROM code will be implemented such that each core will set its corresponding BCx bit immediately before branching to the predefined location in memory.

Copyright © 2012–2016, Texas Instruments Incorporated

8.3.10 Power State Control (PWRSTATECTL) Register

The PWRSTATECTL register is controlled by the software to indicate the power-saving mode. ROM code reads this register to differentiate between the various power saving modes. This register is cleared only by POR and will survive all other device resets. See the Hardware Design Guide for KeyStone Devices for more information. The Power State Control Register is shown in Figure 8-9 and described in Table 8-11.

Figure 8-9. Power State Control Register (PWRSTATECTL)

31	3	2	1	0
GENERAL_PURPOSE		HIBERNATION_MODE	HIBERNATION	STANDBY
RW, +0000 0000 0000 0000 0000 0000 0000 0		RW,+0	RW,+0	RW,+0

Legend: RW = Read/Write; -*n* = value after reset

Table 8-11. Power State Control Register (PWRSTATECTL) Field Descriptions

BIT	FIELD	DESCRIPTION
31-3	GENERAL_PURPOSE	Used to provide a start address for execution out of the hibernation modes. See the Bootloader for the C66x DSP User's Guide.
2	HIBERNATION_MODE	Indicates whether the device is in hibernation mode 1 or mode 2. • 0 = Hibernation mode 1 • 1 = Hibernation mode 2
1	HIBERNATION	Indicates whether the device is in hibernation mode or not. • 0 = Not in hibernation mode • 1 = Hibernation mode
0	STANDBY	Indicates whether the device is in standby mode or not. • 0 = Not in standby mode • 1 = Standby mode

Copyright © 2012–2016, Texas Instruments Incorporated

8.3.11 NMI Event Generation to CorePac (NMIGRx) Register

NMIGRx registers are used for generating NMI events to the corresponding CorePac. The C6657 has two NMIGRx registers (NMIGR0 and NMIGR1) while the C6655 has only NMIGR0. The NMIGR0 register generates an NMI event to CorePac0, and the NMIGR1 register generates an NMI event to CorePac1. Writing 1 to the NMIG field generates an NMI pulse. Writing 0 has no effect and reads return 0 and have no other effect. The NMI Event Generation to CorePac Register is shown in Figure 8-10 and described in Table 8-12.

Figure 8-10. NMI Generation Register (NMIGRx)

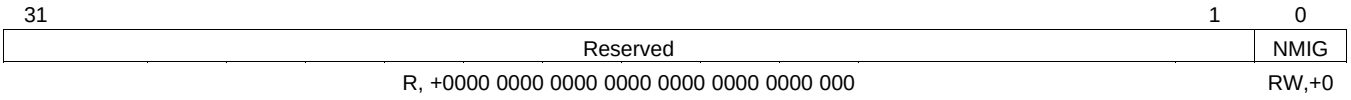

Legend: RW = Read/Write; -*n* = value after reset

Table 8-12. NMI Generation Register (NMIGRx) Field Descriptions

BIT	FIELD	DESCRIPTION
31-1	Reserved	Reserved
0	NMIG	NMI pulse generation. Reads return 0 Writes: • 0 = No effect • 1 = Sends an NMI pulse to the corresponding CorePac — CorePac0 for NMIGR0, and so forth.

8.3.12 IPC Generation (IPCGRx) Registers

IPCGRx are the IPC interrupt generation registers to facilitate inter CorePac interrupts.

The C6657 has two IPCGRx registers (IPCGR0 and IPCGR1) while the C6655 has only IPCGR0. These registers can be used by external hosts or CorePacs to generate interrupts to other CorePacs. A write of 1 to the IPCG field of the IPCGRx register will generate an interrupt pulse to CorePacx (0 <= x <= 1).

These registers also provide a *Source ID* facility by which up to 28 different sources of interrupts can be identified. Allocation of source bits to source processor and meaning is entirely based on software convention. The register field descriptions are given in the following tables. Virtually anything can be a source for these registers as this is completely controlled by software. Any master that has access to BOOTCFG module space can write to these registers. The IPC Generation Register is shown in Figure 8-11 and described in Table 8-13.

Figure 8-11. IPC Generation Registers (IPCGRx)

31	30	29	28	27 – 8	7	6	5	4	3 – 1	0
SRCS27	SRCS26	SRCS25	SRCS24	SRCS23 – SRCS4	SRCS3	SRCS2	SRCS1	SRCS0	Reserved	IPCG
RW +0	RW +0	RW +0	RW +0	RW +0 (per bit field)	RW +0	RW +0	RW +0	RW +0	R, +000	RW +0

Legend: R = Read only; RW = Read/Write; -*n* = value after reset

Table 8-13. IPC Generation Registers (IPCGRx) Field Descriptions

BIT	FIELD	DESCRIPTION
31-4	SRCSx	Interrupt source indication. Reads return current value of internal register bit. Writes: • 0 = No effect • 1 = Sets both SRCSx and the corresponding SRCCx.
3-1	Reserved	Reserved
0	IPCG	Inter-DSP interrupt generation. Reads return 0. Writes: • 0 = No effect • 1 = Creates an Inter-DSP interrupt.

Copyright © 2012–2016, Texas Instruments Incorporated

8.3.13 IPC Acknowledgement (IPCARx) Registers

IPCARx are the IPC interrupt-acknowledgement registers to facilitate inter-CorePac core interrupts.

The C6657 has two IPCARx registers (IPCAR0 and IPCAR1) while the C6655 has only IPCAR0. These registers also provide a *Source ID* facility by which up to 28 different sources of interrupts can be identified. Allocation of source bits to source processor and meaning is entirely based on software convention. The register field descriptions are shown in the following tables. Virtually anything can be a source for these registers as this is completely controlled by software. Any master that has access to BOOTCFG module space can write to these registers. The IPC Acknowledgement Register is shown in Figure 8-12 and described in Table 8-14.

Figure 8-12. IPC Acknowledgement Registers (IPCARx)

31	30	29	28	27 – 8	7	6	5	4	3 – 0
SRCC 27	SRCC 26	SRCC 25	SRCC 24	SRCC23 – SRCC4	SRCC3	SRCC2	SRCC1	SRCC0	Reserved
RW +0	RW +0	RW +0	RW +0	RW +0 (per bit field)	RW +0	RW +0	RW +0	RW +0	R, +0000

Legend: R = Read only; RW = Read/Write; -*n* = value after reset

Table 8-14. IPC Acknowledgement Registers (IPCARx) Field Descriptions

BIT	FIELD	DESCRIPTION
31-4	SRCCx	Interrupt source acknowledgement. Reads return current value of internal register bit. Writes: • 0 = No effect • 1 = Clears both SRCCx and the corresponding SRCSx
3-0	Reserved	Reserved

Copyright © 2012–2016, Texas Instruments Incorporated

8.3.14 IPC Generation Host (IPCGRH) Register

The IPCGRH register facilitates interrupts to external hosts. Operation and use of the IPCGRH register is the same as for other IPCGR registers. The interrupt output pulse created by the IPCGRH register appears on device pin HOUT.

The host interrupt output pulse should be stretched. It should be asserted for 4 bootcfg clock cycles (CPU/6) followed by a deassertion of 4 bootcfg clock cycles. Generating the pulse will result in 8 CPU/6 cycle pulse blocking window. Write to IPCGRH with IPCG bit (bit 0) set will only generate a pulse if they are beyond 8 CPU/6 cycle period. The IPC Generation Host Register is shown in Figure 8-13 and described in Table 8-15.

Figure 8-13. IPC Generation Registers (IPCGRH)

31	30	29	28	27 – 8	7	6	5	4	3 – 1	0
SRCS27	SRCS26	SRCS25	SRCS24	SRCS23 – SRCS4	SRCS3	SRCS2	SRCS1	SRCS0	Reserved	IPCG
RW +0	RW +0	RW +0	RW +0	RW +0 (per bit field)	RW +0	RW +0	RW +0	RW +0	R, +000	RW +0

Legend: R = Read only; RW = Read/Write; -*n* = value after reset

Table 8-15. IPC Generation Registers (IPCGRH) Field Descriptions

BIT	FIELD	DESCRIPTION
31-4	SRCSx	Interrupt source indication. Reads return current value of internal register bit. Writes: • 0 = No effect • 1 = Sets both SRCSx and the corresponding SRCCx.
3-1	Reserved	Reserved
0	IPCG	Host interrupt generation. Reads return 0. Writes: • 0 = No effect • 1 = Creates an interrupt pulse on device pin (host interrupt/event output in HOUT pin)

Copyright © 2012–2016, Texas Instruments Incorporated

8.3.15 IPC Acknowledgement Host (IPCARH) Register

IPCARH registers are provided to facilitate host DSP interrupt. Operation and use of IPCARH is the same as other IPCAR registers. The IPC Acknowledgement Host Register is shown in Figure 8-14 and described in Table 8-16.

Figure 8-14. IPC Acknowledgement Register (IPCARH)

31	30	29	28	27 – 8	7	6	5	4	3 – 0
SRCC 27	SRCC 26	SRCC 25	SRCC 24	SRCC23 – SRCC4	SRCC3	SRCC2	SRCC1	SRCC0	Reserved
RW +0	RW +0	RW +0	RW +0	RW +0 (per bit field)	RW +0	RW +0	RW +0	RW +0	R, +0000

Legend: R = Read only; RW = Read/Write; -*n* = value after reset

Table 8-16. IPC Acknowledgement Register (IPCARH) Field Descriptions

BIT	FIELD	DESCRIPTION
31-4	SRCCx	Interrupt source acknowledgement. Reads return current value of internal register bit. Writes: • 0 = No effect • 1 = Clears both SRCCx and the corresponding SRCSx
3-0	Reserved	Reserved

8.3.16 Timer Input Selection Register (TINPSEL)

Timer input selection is handled within the control register TINPSEL. The Timer Input Selection Register is shown in Figure 8-15 and described in Table 8-17.

Figure 8-15. Timer Input Selection Register (TINPSEL)

31	30	29	28	27	26	25	24	23	22	21	20	19	18	17	16
Reserved															
R, +1010 1010 1010 1010															
15	**14**	**13**	**12**	**11**	**10**	**9**	**8**	**7**	**6**	**5**	**4**	**3**	**2**	**1**	**0**
TINPHSEL7	TINPLSEL7	TINPHSEL6	TINPLSEL6	TINPHSEL5	TINPLSEL5	TINPHSEL4	TINPLSEL4	TINPHSEL3	TINPLSEL3	TINPHSEL2	TINPLSEL2	TINPHSEL1	TINPLSEL1	TINPHSEL0	TINPLSEL0
RW, +1	RW, +0	RW, +1	RW, +0	RW, +1	RW, +0	RW, +1	RW, +0	RW, +1	RW, +0	RW, +1	RW, +0	RW, +1	RW, +0	RW, +1	RW, +0

Legend: R = Read only; RW = Read/Write; -*n* = value after reset

Table 8-17. Timer Input Selection Field Description (TINPSEL)

BIT	FIELD	DESCRIPTION
31-16	Reserved	• Reserved
15	TINPHSEL7	Input select for TIMER7 high. • 0 = TIMI0 • 1 = TIMI1
14	TINPLSEL7	Input select for TIMER7 low. • 0 = TIMI0 • 1 = TIMI1
13	TINPHSEL6	Input select for TIMER6 high. • 0 = TIMI0 • 1 = TIMI1
12	TINPLSEL6	Input select for TIMER6 low. • 0 = TIMI0 • 1 = TIMI1
11	TINPHSEL5	Input select for TIMER5 high. • 0 = TIMI0 • 1 = TIMI1
10	TINPLSEL5	Input select for TIMER5 low. • 0 = TIMI0 • 1 = TIMI1
9	TINPHSEL4	Input select for TIMER4 high. • 0 = TIMI0 • 1 = TIMI1
8	TINPLSEL4	Input select for TIMER4 low. • 0 = TIMI0 • 1 = TIMI1
7	TINPHSEL3	Input select for TIMER3 high. • 0 = TIMI0 • 1 = TIMI1
6	TINPLSEL3	Input select for TIMER3 low. • 0 = TIMI0 • 1 = TIMI1
5	TINPHSEL2	Input select for TIMER2 high. • 0 = TIMI0 • 1 = TIMI1

Copyright © 2012–2016, Texas Instruments Incorporated

Table 8-17. Timer Input Selection Field Description (TINPSEL) (continued)

BIT	FIELD	DESCRIPTION
4	TINPLSEL2	Input select for TIMER2 low. • 0 = TIMI0 • 1 = TIMI1
3	TINPHSEL1	Input select for TIMER1 high. • 0 = TIMI0 • 1 = TIMI1
2	TINPLSEL1	Input select for TIMER1 low. • 0 = TIMI0 • 1 = TIMI1
1	TINPHSEL0	Input select for TIMER0 high. • 0 = TIMI0 • 1 = TIMI1
0	TINPLSEL0	Input select for TIMER0 low. • 0 = TIMI0 • 1 = TIMI1

Copyright © 2012–2016, Texas Instruments Incorporated

8.3.17 Timer Output Selection Register (TOUTPSEL)

The timer output selection is handled within the control register TOUTSEL. The Timer Output Selection Register is shown in Figure 8-16 and described in Table 8-18.

Figure 8-16. Timer Output Selection Register (TOUTPSEL)

31	10	9	5	4	0
Reserved		TOUTPSEL1		TOUTPSEL0	
R,+00000000000000000000000000		RW,+00001		RW,+00000	

Legend: R = Read only; RW = Read/Write; -*n* = value after reset

Table 8-18. Timer Output Selection Field Description (TOUTPSEL)

BIT	FIELD	DESCRIPTION
31-10	Reserved	Reserved
9-5	TOUTPSEL1	Output select for TIMO1 • 0x0: TOUTL0 • 0x1: TOUTH0 • 0x2: TOUTL1 • 0x3: TOUTH1 • 0x4: TOUTL2 • 0x5: TOUTH2 • 0x6: TOUTL3 • 0x7: TOUTH3 • 0x8: TOUTL4 • 0x9: TOUTH4 • 0xA: TOUTL5 • 0xB: TOUTH5 • 0xC: TOUTL6 • 0xD: TOUTH6 • 0xE: TOUTL7 • 0xF: TOUTH7 • 0x10 to 0x1F: Reserved
4-0	TOUTPSEL0	Output select for TIMO0 • 0x0: TOUTL0 • 0x1: TOUTH0 • 0x2: TOUTL1 • 0x3: TOUTH1 • 0x4: TOUTL2 • 0x5: TOUTH2 • 0x6: TOUTL3 • 0x7: TOUTH3 • 0x8: TOUTL4 • 0x9: TOUTH4 • 0xA: TOUTL5 • 0xB: TOUTH5 • 0xC: TOUTL6 • 0xD: TOUTH6 • 0xE: TOUTL7 • 0xF: TOUTH7 • 0x10 to 0x1F: Reserved

Copyright © 2012–2016, Texas Instruments Incorporated

8.3.18 Reset Mux (RSTMUXx) Register

The software controls the Reset Mux block through the reset multiplex registers using RSTMUX0 through RSTMUX1 for each of the two CorePacs on the C6657. The C6655 has only RSTMUX0. These registers arelocated in Bootcfg memory space. The Reset Mux Register is shown in Figure 8-17 and described in Table 8-19.

Figure 8-17. Reset Mux Register RSTMUXx

31 10	9	8	7 5	4	3 1	0
Reserved	EVTSTATCLR	Reserved	DELAY	EVTSTAT	OMODE	LOCK
R, +0000 0000 0000 0000 0000 00	RC, +0	R, +0	RW, +100	R, +0	RW, +000	RW, +0

Legend: R = Read only; RW = Read/Write; -*n* = value after reset; RC = Read only and write 1 to clear

Table 8-19. Reset Mux Register Field Descriptions

BIT	FIELD	DESCRIPTION
31-10	Reserved	Reserved
9	EVTSTATCLR	Clear event status • 0 = Writing 0 has no effect • 1 = Writing 1 clears the EVTSTAT bit
8	Reserved	Reserved
7-5	DELAY	Delay cycles between NMI and local reset • 000b = 256 CPU/6 cycles delay between NMI and local reset, when OMODE = 100b • 001b = 512 CPU/6 cycles delay between NMI and local reset, when OMODE=100b • 010b = 1024 CPU/6 cycles delay between NMI and local reset, when OMODE=100b • 011b = 2048 CPU/6 cycles delay between NMI and local reset, when OMODE=100b • 100b = 4096 CPU/6 cycles delay between NMI and local reset, when OMODE=100b (Default) • 101b = 8192 CPU/6 cycles delay between NMI and local reset, when OMODE=100b • 110b = 16384 CPU/6 cycles delay between NMI and local reset, when OMODE=100b • 111b = 32768 CPU/6 cycles delay between NMI and local reset, when OMODE=100b
4	EVTSTAT	Event status. • 0 = No event received (Default) • 1 = WD timer event received by Reset Mux block
3-1	OMODE	Timer event operation mode • 000b = WD timer event input to the reset mux block does not cause any output event (default) • 001b = Reserved • 010b = WD timer event input to the reset mux block causes local reset input to CorePac • 011b = WD timer event input to the reset mux block causes NMI input to CorePac • 100b = WD timer event input to the reset mux block causes NMI input followed by local reset input to CorePac. Delay between NMI and local reset is set in DELAY bit field. • 101b = WD timer event input to the reset mux block causes device reset to C665x • 110b = Reserved • 111b = Reserved
0	LOCK	Lock register fields • 0 = Register fields are not locked (default) • 1 = Register fields are locked until the next timer reset

Copyright © 2012–2016, Texas Instruments Incorporated

8.3.19 Device Speed (DEVSPEED) Register

The Device Speed Register indicates the device speed grade. The Device Speed Register is shown in Figure 8-18 and described in Table 8-20.

Figure 8-18. Device Speed Register (DEVSPEED)

31	30 23	22 0
Reserved	DEVSPEED	Reserved
R-n	R-n	R-n

Legend: R = Read only; RW = Read/Write; -*n* = value after reset

Table 8-20. Device Speed Register Field Descriptions

BIT	FIELD	DESCRIPTION
31	Reserved	Reserved. Read only
30-23	DEVSPEED	Indicates the speed of the device (Read Only) • 1xxx xxxxb = 850 MHz • 01xx xxxxb = 1000 MHz • 001x xxxxb = 1250 MHz • 0001 xxxxb = Reserved • 0000 1xxxb = Reserved • 0000 01xxb = 1250 MHz • 0000 001xb = 1000 MHz • 0000 0001b = 850 MHz • 0000 0000b = 850 MHz
22-0	Reserved	Reserved. Read only

Copyright © 2012–2016, Texas Instruments Incorporated

8.3.20 Pin Control 0 (PIN_CONTROL_0) Register

The Pin Control 0 Register controls the pin muxing between GPIO[16:31] and TIMER / UART / SPI pins. The Pin Control 0 Register is shown in Figure 8-19 and described in Table 8-21.

Figure 8-19. Pin Control 0 Register (PIN_CONTROL_0)

31	30	29	28	27	26	25	24
GPIO31_SPIDOUT_MUX	GPIO30_SPIDIN_MUX	GPIO29_SPICS1_MUX	GPIO28_SPICS0_MUX	GPIO27_UARTRTS1_MUX	GPIO26_UARTCTS1_MUX	GPIO25_UARTTX1_MUX	GPIO24_UARTRX1_MUX
RW-0	RW-0	RW-0	RW-0	RW-0	RW-0	RW-0	RW-0
23	22	21	20	19	18	17	16
GPIO23_UARTRTS0_MUX	GPIO22_UARTCTS0_MUX	GPIO21_UARTTX0_MUX	GPIO20_UARTRX0_MUX	GPIO19_TIMO1_MUX	GPIO18_TIMO0_MUX	GPIO17_TIMI1_MUX	GPIO16_TIMI0_MUX
RW-0	RW-0	RW-0	RW-0	RW-0	RW-0	RW-0	RW-0

15	0
Reserved	
R-0	

Legend: R = Read only; RW = Read/Write; -*n* = value after reset

Table 8-21. Pin Control 0 Register Field Descriptions

BIT	FIELD	DESCRIPTION
31	GPIO31_SPIDOUT_MUX	SPI or GPIO mux control • 0 = SPIDOUT pin enabled • 1 = GPIO31 pin enabled
30	GPIO30_SPIDIN_MUX	SPI or GPIO mux control • 0 = SPIDIN pin enabled • 1 = GPIO30 pin enabled
29	GPIO29_SPICS1_MUX	SPI or GPIO mux control • 0 = SPICS1 pin enabled • 1 = GPIO29 pin enabled
28	GPIO28_SPICS0_MUX	SPI or GPIO mux control • 0 = SPICS0 pin enabled • 1 = GPIO28 pin enabled
27	GPIO27_UARTRTS1_MUX	UART or GPIO mux control • 0 = UARTRTS1 pin enabled • 1 = GPIO27 pin enabled
26	GPIO26_UARTCTS1_MUX	UART or GPIO mux control • 0 = UARTCTS1 pin enabled • 1 = GPIO26 pin enabled
25	GPIO25_UARTTX1_MUX	UART or GPIO mux control • 0 = UARTTX1 pin enabled • 1 = GPIO25 pin enabled
24	GPIO24_UARTRX1_MUX	UART or GPIO mux control • 0 = UARTRX1 pin enabled • 1 = GPIO24 pin enabled
23	GPIO23_UARTRTS0_MUX	UART or GPIO mux control • 0 = UARTRTS0 pin enabled • 1 = GPIO23 pin enabled
22	GPIO22_UARTCTS0_MUX	UART or GPIO mux control • 0 = UARTCTS0 pin enabled • 1 = GPIO22 pin enabled
21	GPIO21_UARTTX0_MUX	UART or GPIO mux control • 0 = UARTTX0 pin enabled • 1 = GPIO21 pin enabled

Copyright © 2012–2016, Texas Instruments Incorporated

Table 8-21. Pin Control 0 Register Field Descriptions (continued)

BIT	FIELD	DESCRIPTION
20	GPIO20_UARTRX0_MUX	UART or GPIO mux control • 0 = UARTRX0 pin enabled • 1 = GPIO20 pin enabled
19	GPIO19_TIMO1_MUX	TIMER or GPIO mux control • 0 = TIMO1 pin enabled • 1 = GPIO19 pin enabled
18	GPIO18_TIMO0_MUX	TIMER or GPIO mux control • 0 = TIMO0 pin enabled • 1 = GPIO18 pin enabled
17	GPIO17_TIMI1_MUX	TIMER or GPIO mux control • 0 = TIMI1 pin enabled • 1 = GPIO17 pin enabled
16	GPIO16_TIMI0_MUX	TIMER or GPIO mux control • 0 = TIMI0 pin enabled • 1 = GPIO16 pin enabled
15-0	Reserved	Reserved

Copyright © 2012–2016, Texas Instruments Incorporated

8.3.21 Pin Control 1 (PIN_CONTROL_1) Register

The Pin Control 1 Register controls the pin muxing between uPP and EMIF16 pins. The Pin Control 1 Register is shown in Figure 8-20 and described in Table 8-22.

Figure 8-20. Pin Control 1Register (PIN_CONTROL_1)

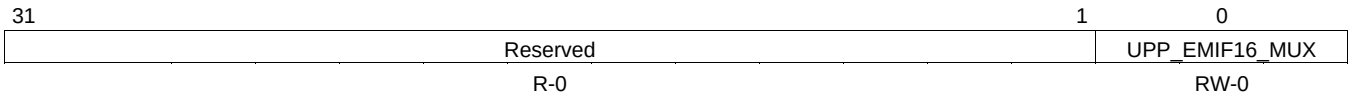

Legend: R = Read only; RW = Read/Write; -*n* = value after reset

Table 8-22. Pin Control 1 Register Field Descriptions

BIT	FIELD	DESCRIPTION
31-1	Reserved	Reserved
0	UPP_EMIF_MUX	uPP or EMIF16 mux control • 0 = EMIF16 pins enabled • 1 = uPP pins enabled

8.3.22 uPP Clock Source (UPP_CLOCK) Register

The uPP Clock Source Register controls whether the uPP transmit clock is internally or externally sourced. The uPP Clock Source Register is shown in Figure 8-21 and described in Table 8-23.

Figure 8-21. uPP Clock Source Register (UPP_CLOCK)

31	1	0
Reserved		UPP_TX_CLKSRC
R-0		RW-0

Legend: R = Read only; RW = Read/Write; -*n* = value after reset

Table 8-23. uPP Clock Source Register Field Descriptions

BIT	FIELD	DESCRIPTION
31-1	Reserved	Reserved
0	UPP_TX_CLKSRC	uPP clock source selection • 0 = from internal SYSCLK4 (CPU/3) • 1 = from external UPP_2XTXCLK pin

Copyright © 2012–2016, Texas Instruments Incorporated

8.4 Pullup and Pulldown Resistors

Proper board design should ensure that input pins to the device always be at a valid logic level and not floating. This may be achieved through pullup and pulldown resistors. The device features internal pullup (IPU) and internal pulldown (IPD) resistors on most pins to eliminate the need, unless otherwise noted, for external pullup and pulldown resistors.

An external pullup or pulldown resistor needs to be used in the following situations:

- **Device Configuration Pins:** If the pin is both routed out and is not driven (in Hi-Z state), an external pullup or pulldown resistor must be used, even if the IPU/IPD matches the desired value/state.
- **Other Input Pins:** If the IPU/IPD does not match the desired value/state, use an external pullup or pulldown resistor to pull the signal to the opposite rail.

For the device configuration pins (listed in Table 8-1), if they are both routed out and are not driven (in Hi-Z state), it is strongly recommended that an external pullup or pulldown resistor be implemented. Although, internal pullup and pulldown resistors exist on these pins and they may match the desired configuration value, providing external connectivity can help ensure that valid logic levels are latched on these device configuration pins. In addition, applying external pullup and pulldown resistors on the device configuration pins adds convenience to the user in debugging and flexibility in switching operating modes.

Tips for choosing an external pullup or pulldown resistor:

- Consider the total amount of current that may pass through the pullup or pulldown resistor. Make sure to include the leakage currents of all the devices connected to the net, as well as any internal pullup or pulldown resistors.
- Decide a target value for the net. For a pulldown resistor, this should be below the lowest V_{IL} level of all inputs connected to the net. For a pullup resistor, this should be above the highest V_{IH} level of all inputs on the net. A reasonable choice would be to target the V_{OL} or V_{OH} levels for the logic family of the limiting device; which, by definition, have margin to the V_{IL} and V_{IH} levels.
- Select a pullup or pulldown resistor with the largest possible value that can still ensure that the net will reach the target pulled value when maximum current from all devices on the net is flowing through the resistor. The current to be considered includes leakage current plus, any other internal and external pullup or pulldown resistors on the net.
- For bidirectional nets, there is an additional consideration that sets a lower limit on the resistance value of the external resistor. Verify that the resistance is small enough that the weakest output buffer can drive the net to the opposite logic level (including margin).
- Remember to include tolerances when selecting the resistor value.
- For pullup resistors, also remember to include tolerances on the DV_{DD} rail.

For most systems:

- A 1-kΩ resistor can be used to oppose the IPU/IPD while meeting the above criteria. Users should confirm this resistor value is correct for their specific application.
- A 20-kΩ resistor can be used to compliment the IPU/IPD on the device configuration pins while meeting the above criteria. Users should confirm this resistor value is correct for their specific application.

For more detailed information on input current (I_I), and the low-level/high-level input voltages (V_{IL} and V_{IH}) for the C665x device, see Section 5.5.

To determine which pins on the device include internal pullup and pulldown resistors, see Table 4-2.

Copyright © 2012–2016, Texas Instruments Incorporated

9 System Interconnect

On the C665x device, the C66x CorePacs, the EDMA3 transfer controller, and the system peripherals are interconnected through the TeraNet, which is a nonblocking switch fabric enabling fast and contention-free internal data movement. The TeraNet allows for low-latency, concurrent data transfers between master peripherals and slave peripherals. The TeraNet also allows for seamless arbitration between the system masters when accessing system slaves.

9.1 Internal Buses and Switch Fabrics

Two types of buses exist in the device: data buses and configuration buses. Some peripherals have both a data bus and a configuration bus interface, while others have only one type of interface. Further, the bus interface width and speed varies from peripheral to peripheral. Configuration buses are mainly used to access the register space of a peripheral and the data buses are used mainly for data transfers.

The C66x CorePacs, the EDMA3 traffic controller, and the various system peripherals can be classified into two categories: masters and slaves. Masters can initiate read and write transfers in the system and do not rely on the EDMA3 for their data transfers. Slaves, on the other hand, rely on the masters to perform transfers to and from them. Examples of masters include the EDMA3 traffic controller, SRIO, and PCI Express. Examples of slaves include the SPI, UART, and I^2C.

The masters and slaves in the device communicate through the TeraNet (switch fabric). The device contains two switch fabrics. The data switch fabric (data TeraNet) and the configuration switch fabric (configuration TeraNet). The data TeraNet, is a high-throughput interconnect mainly used to move data across the system. The data TeraNet connects masters to slaves through data buses. The configuration TeraNet is mainly used to access peripheral registers. The configuration TeraNet connects masters to slaves through configuration buses. The data TeraNet also connects to the configuration TeraNet. For more details see Section 9.2.

9.2 Switch Fabric Connections Matrix

Table 9-1 and Table 9-2 list the master and slave end point connections.

Intersecting cells may contain one of the following:

- Y — There is a connection between this master and that slave.
- - — There is no connection between this master and that slave.
- n — A numeric value indicates that the path between this master and that slave goes through bridge n.

Copyright © 2012–2016, Texas Instruments Incorporated

Table 9-1. Switch Fabric Connection Matrix Section 1

	SLAVES																							
MASTERS	**CorePac0_SDMA**	**CorePac1_SDMA (C6657 Only)**	**PCIe0_Slave**	**Boot_ROM**	**SPI**	**EMIF16**	**Mcbsp0_FIFO_Data**	**Mcbsp1_FIFO_Data**	**QM_Slave**	**HyperLink_Slave**	**MSMC_SES**	**MSMC_SMS**	**STM**	**VCP2(0-1)**	**TCP3d**	**TETB_D**	**TETB0**	**TETB1 (C6657 Only)**	**VCP2_Cfg**	**TCP3d**	**EDMA3CC**	**EDMA3TC(0-3)**	**Semaphore**	**QM__CFG**
HyperLink_Master	Y	Y	Y	Y	Y	Y	1, 4	1, 4	1	-	Y	Y	-	Y	Y	-	-	-	1	1	1	1	1	1
EDMA3CC_TC0_RD	Y	Y	Y	Y	Y	Y	-	-	-	Y	Y	Y	-	Y	Y	1	-	-	1	1	1	1	1	1
EDMA3CC_TC0_WR	Y	Y	Y	-	Y	Y	-	-	-	Y	Y	Y	1	Y	Y	-	-	-	1	1	1	1	1	1
EDMA3CC_TC1_RD	Y	Y	Y	Y	Y	Y	2, 4	2, 4	-	Y	Y	Y	-	-	Y	-	2	2	-	-	2	2	-	-
EDMA3CC_TC1_WR	Y	Y	Y	-	Y	Y	2, 4	2, 4	-	Y	Y	Y	-	-	Y	-	-	-	-	-	2	2	-	-
EDMA3CC_TC2_RD	Y	Y	Y	Y	Y	Y	1, 4	1, 4	-	Y	Y	Y	-	Y	Y	1	-	-	1	1	1	1	1	1
EDMA3CC_TC2_WR	Y	Y	Y	-	Y	Y	1, 4	1, 4	-	Y	Y	Y	-	Y	Y	-	-	-	1	1	1	1	1	1
EDMA3CC_TC3_RD	Y	Y	Y	Y	Y	Y	-	-	2	Y	Y	Y	-	-	-	-	-	-	-	-	2	2	-	-
EDMA3CC_TC3_WR	Y	Y	Y	-	Y	Y	-	-	2	Y	Y	Y	2	-	-	-	-	-	-	-	2	2	-	-
SRIO packet DMA	Y	Y	-	-	-	-	-	-	1	Y	Y	Y	-	-	-	-	-	-	-	-	-	-	-	-
SRIO_Master	Y	Y	-	-	Y	Y	1, 4	1, 4	1	Y	Y	Y	1	Y	Y	1	1	1	1	1	1	1	1	1
PCIe_Master	Y	Y	-	-	Y	Y	1, 4	1, 4	1	Y	Y	Y	1	Y	Y	1	1	1	1	1	1	1	1	1
EMAC	3	3	-	-	-	-	-	-	-	3	3	3	-	-	-	-	-	-	-	-	-	-	-	-
MSMC_Data_Master	Y	Y	Y	Y	Y	Y	1, 4	1, 4	1	Y	-	-	1	Y	Y	-	-	-	-	-	-	-	-	-
QM Packet DMA	Y	Y	-	-	-	-	-	-	1	Y	Y	Y	-	-	-	-	-	-	-	-	-	-	-	-
QM Second	Y	Y	-	Y	Y	Y	-	-	1	Y	Y	Y	-	-	-	-	-	-	-	-	-	-	-	-
DAP_Master	Y	Y	Y	Y	Y	Y	1, 4	1, 4	1	Y	Y	Y	1	Y	Y	1	1	1	1	1	1	1	1	1
CorePac0_CFG	-	-	-	-	-	-	-	-	-	-	-	-	-	-	-	-	-	-	-	-	-	Y	-	-
CorePac1_CFG (C6657 Only)	-	-	-	-	-	-	-	-	-	-	-	-	-	-	-	Y	Y	Y	Y	Y	Y	Y	Y	Y
Tracer_Master	-	-	-	-	-	-	-	-	-	-	-	-	1	-	-	Y	Y	Y	Y	Y	Y	Y	Y	Y
uPP	3	3	-	-	-	-	-	-	-	3	3	3	-	-	-	-	-	-	-	-	-	-		

Table 9-2. Switch Fabric Connection Matrix Section 2

MASTERS	SLAVES																				
	Tracer	SRIO_CFG (C6655/57 Only)	Timer	GPIO	I2C	SEC_CTL	SEC_KEY_MGR	Efuse	Boot_CFG	PSC	PLL	CIC	MPU0-3	MPU4	Debug_SS_CFG	SmartReflex	UART_CFG (0-1)	McBSP_CFG(0-1)	McBSP_FIFO_CFG(0-1)	EMAC_CFG	UPP_CFG
HyperLink_Master	1	1	1, 4	1, 4	1, 4	1, 4	1, 4	1, 4	1, 4	1, 4	1, 4	1, 4	1	1, 4	1, 4	1, 4	1, 4	1, 4	1, 4	1, 4	1
EDMA3CC_TC0_RD	1	1	1, 4	1, 4	1, 4	1, 4	1, 4	-	1, 4	1, 4	1, 4	1, 4	1	1, 4	-	-	1, 4	1, 4	1, 4	1, 4	1
EDMA3CC_TC0_WR	1	1	1, 4	1, 4	1, 4	1, 4	1, 4	-	1, 4	1, 4	1, 4	1, 4	1	1, 4	-	-	1, 4	1, 4	1, 4	1, 4	1
EDMA3CC_TC1_RD	-	-	-	-	-	-	-	-	-	-	-	-	-	-	-	-	-	-	-	-	-
EDMA3CC_TC1_WR	-	-	-	-	-	-	-	-	-	-	-	-	-	-	-	-	-	-	-	-	-
EDMA3CC_TC2_RD	1	1	1, 4	1, 4	1, 4	1, 4	1, 4	-	1, 4	1, 4	1, 4	1, 4	1	1, 4	-	-	1, 4	1, 4	1, 4	1, 4	1
EDMA3CC_TC2_WR	1	1	1, 4	1, 4	1, 4	1, 4	1, 4	-	1, 4	1, 4	1, 4	1, 4	1	1, 4	-	-	1, 4	1, 4	1, 4	1, 4	1
EDMA3CC_TC3_RD	-	-	-	-	-	-	-	-	-	-	-	-	-	-	-	-	-	-	-	-	-
EDMA3CC_TC3_WR	-	-	-	-	-	-	-	-	-	-	-	-	-	-	-	-	-	-	-	-	-
SRIO packet DMA	-	-	-	-	-	-	-	-	-	-	-	-	-	-	-	-	-	-	-	-	-
SRIO_Master	1	1	1, 4	1, 4	1, 4	1, 4	1, 4	-	1, 4	1, 4	1, 4	1, 4	1	1, 4	1, 4	1, 4	1, 4	1, 4	1, 4	1, 4	1
PCIe_Master	1	1	1, 4	1, 4	1, 4	1, 4	1, 4	-	1, 4	1, 4	1, 4	1, 4	1	1, 4	1, 4	1, 4	1, 4	1, 4	1, 4	1, 4	1
EMAC	-	-	-	-	-	-	-	-	-	-	-	-	-	-	-	-	-	-	-	-	-
MSMC_Data_Master	-	-	-	-	-	-	-	-	-	-	-	-	-	-	-	-		-	-	-	-
QM Packet DMA	-	-	-	-	-	-	-	-	-	-	-	-	-	-	-	-	-	-	-	-	-
QM Second	-	-	-	-	-	-	-	-	-	-	-	-	-	-	-	-	-	-	-	-	-
DAP_Master	1	1	1, 4	1, 4	1, 4	1, 4	1, 4	1, 4	1, 4	1, 4	1, 4	1, 4	1	1, 4	1, 4	1, 4	1, 4	1, 4	1, 4	1, 4	1
EDMA3CC	-	-	-	-	-	-	-	-	-	-	-	-	-	-	-	-	-	-	-	-	-
CorePac0_CFG	Y	Y	4	4	4	4	4	4	4	4	4	4	Y	4	4	4	4	4	4	4	Y
CorePac1_CFG (C6657 Only)	Y	Y	4	4	4	4	4	4	4	4	4	4	Y	4	4	4	4	4	4	4	Y
Tracer_Master	-	-	-	-	-	-	-	-	-	-	-	-	-	-	-	-	-	-	-	-	-
uPP	-	-	-	-	-	-	-	-	-	-	-	-	-	-	-	-	-	-	-	-	-

Copyright © 2012–2016, Texas Instruments Incorporated

9.3 TeraNet Switch Fabric Connections

Figure 9-1, Figure 9-2, Figure 9-3, Figure 9-4, and Figure 9-5 show the connections between masters and slaves through various sections of the TeraNet.

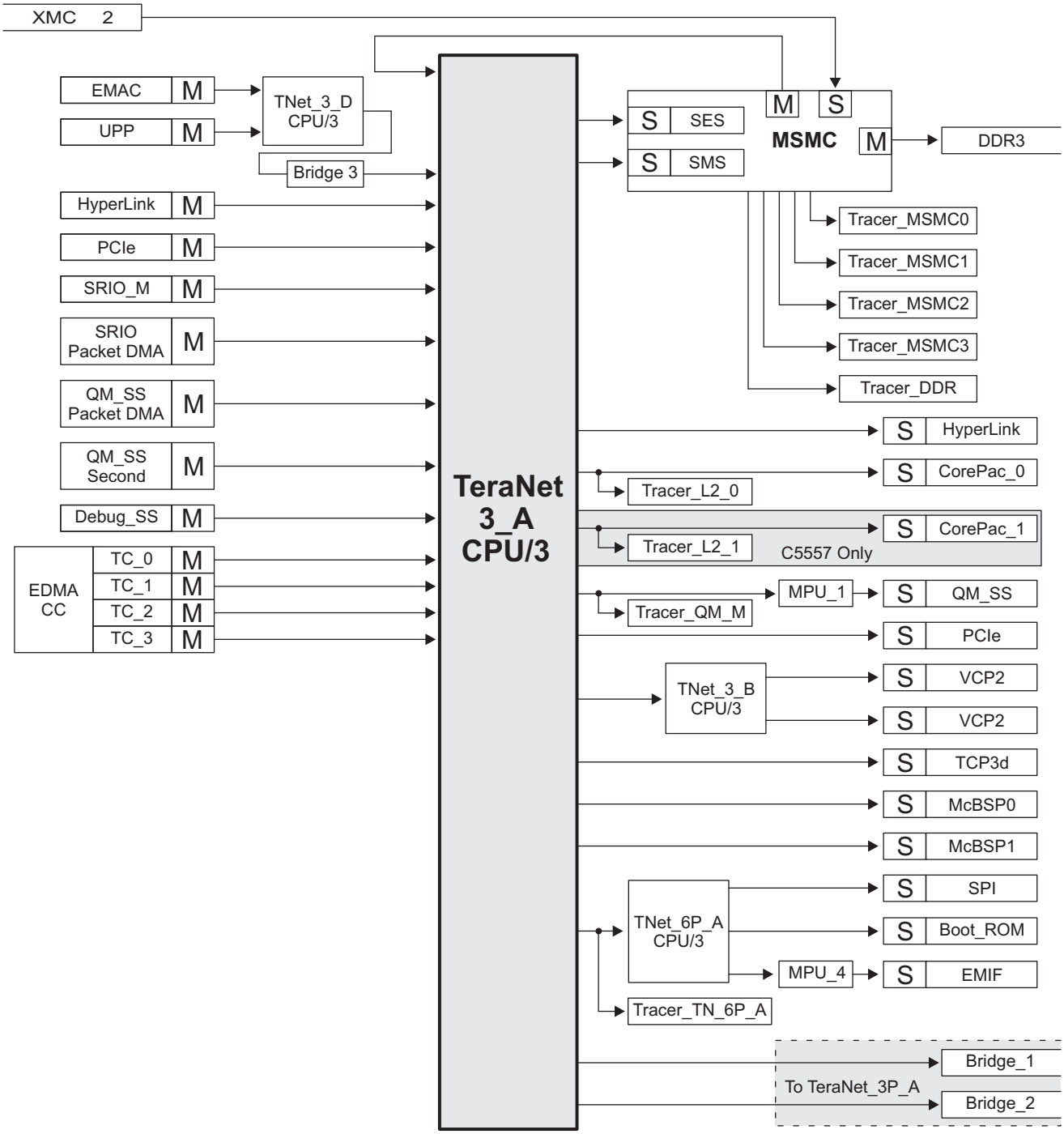

Figure 9-1. TeraNet 3A

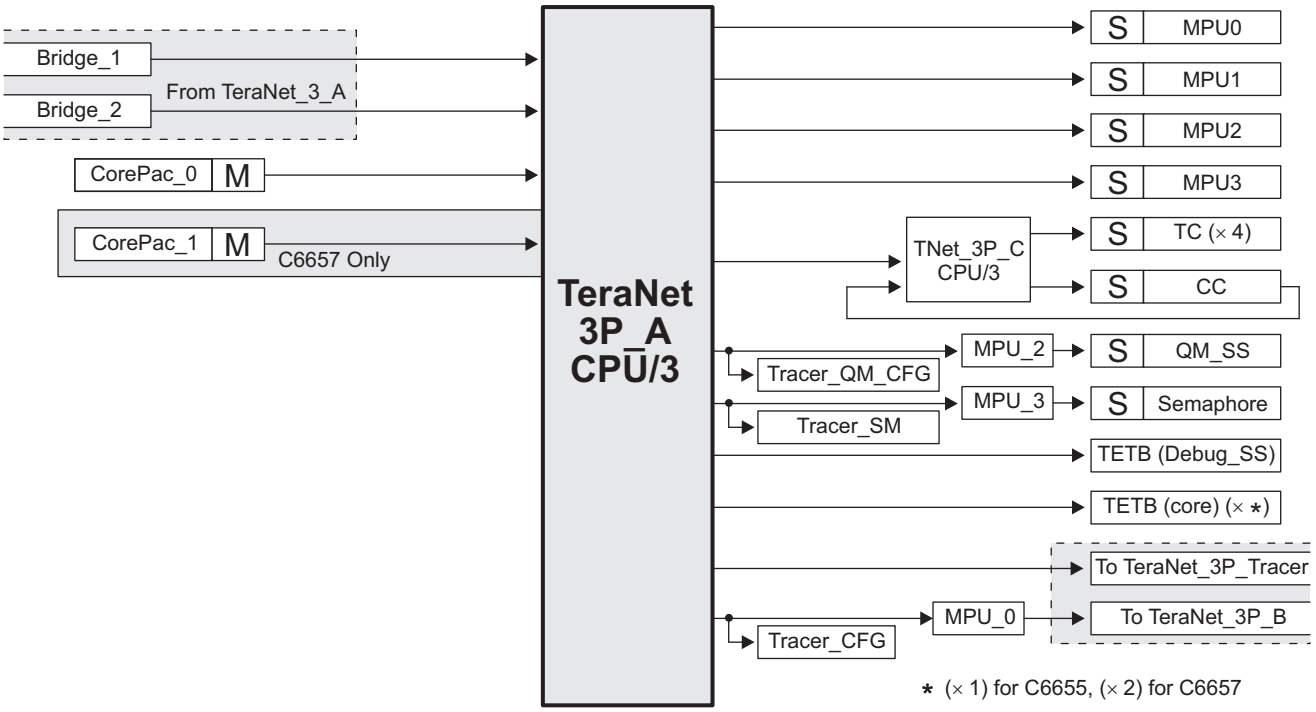

Figure 9-2. TeraNet 3P_A

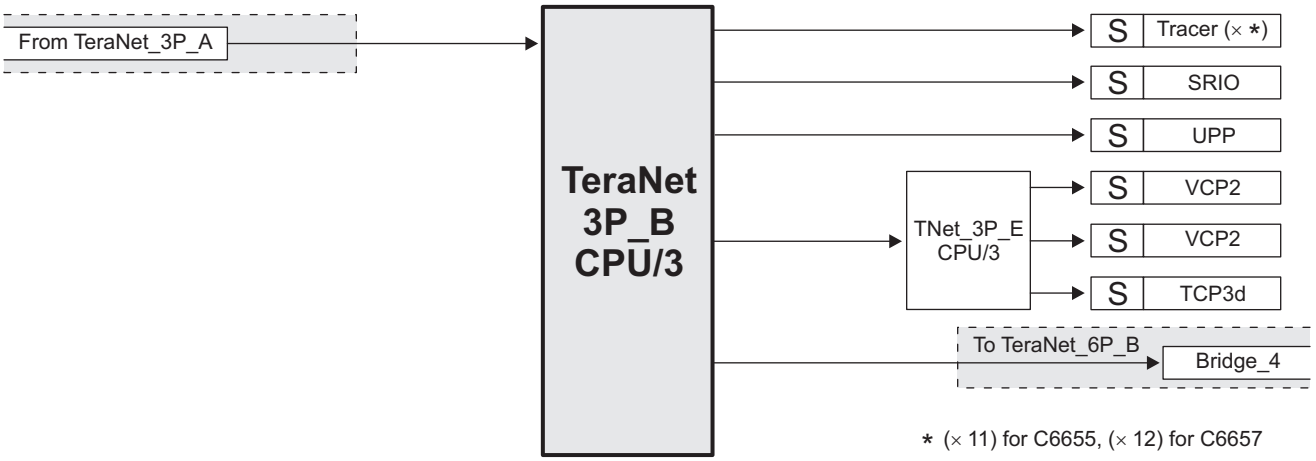

Figure 9-3. TeraNet 3P_B

Copyright © 2012–2016, Texas Instruments Incorporated

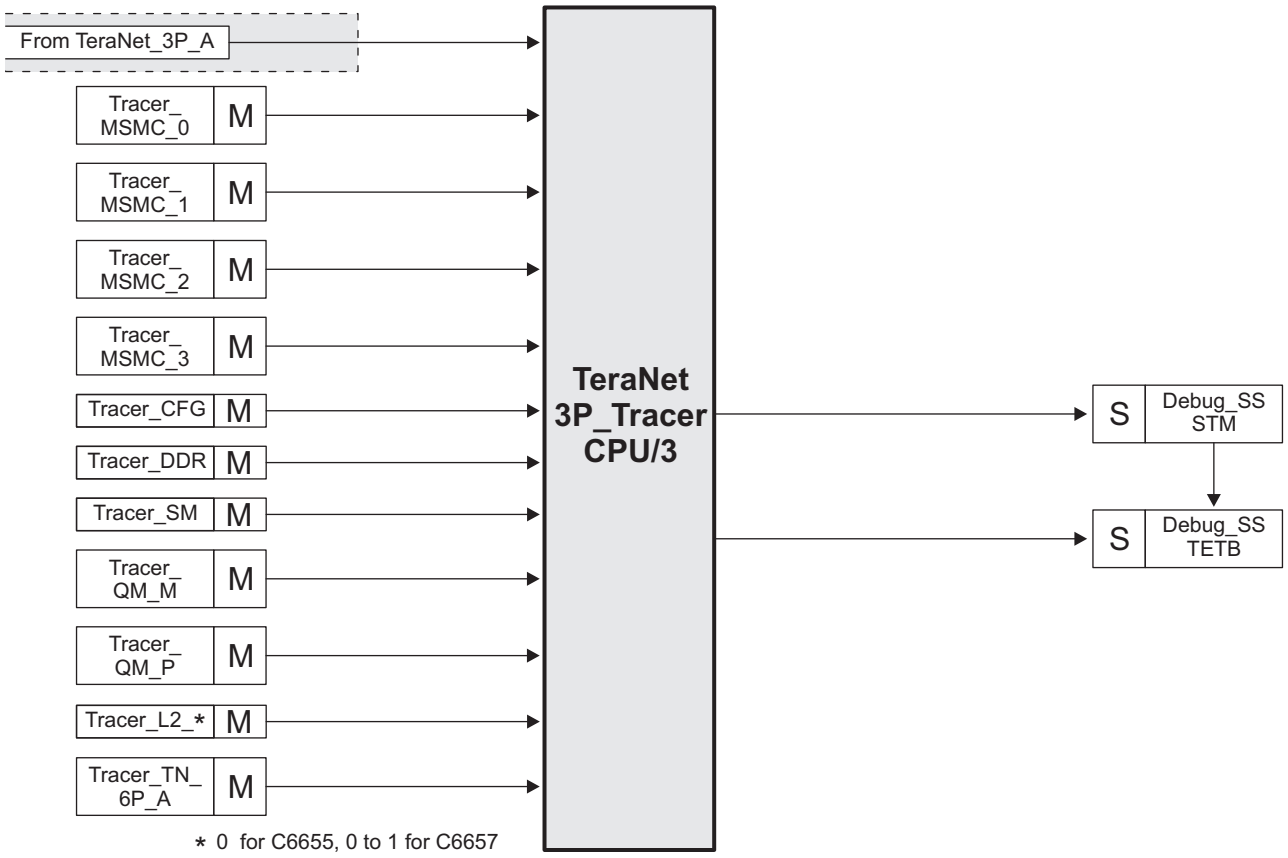

Figure 9-4. TeraNet 3P_Tracer

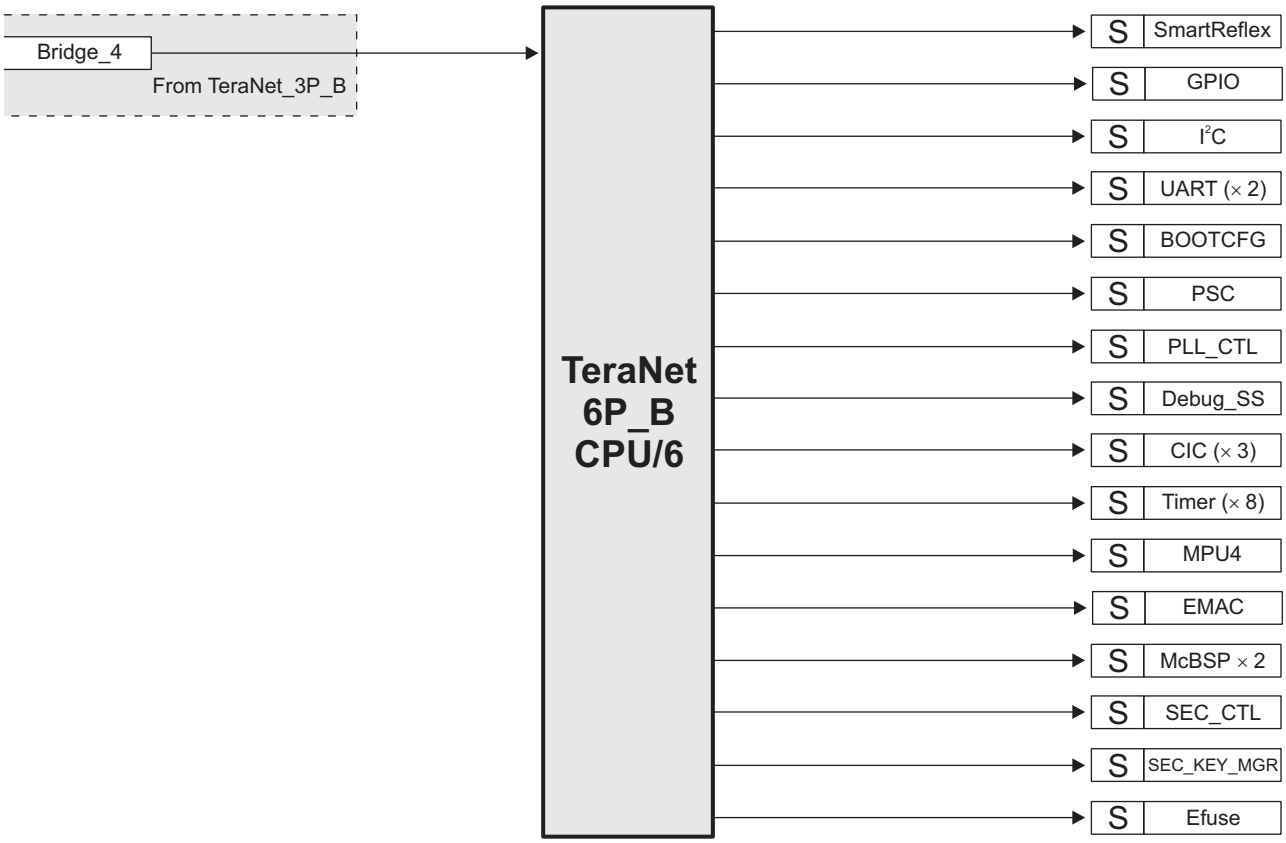

Figure 9-5. TeraNet 6P_B

9.4 Bus Priorities

The priority level of all master peripheral traffic is defined at the TeraNet boundary. User programmable priority registers allow software configuration of the data traffic through the TeraNet. A lower number means higher priority - PRI = 000b = urgent, PRI = 111b = low.

Most master ports provide their priority directly and do not need a default priority setting. Examples include the CorePacs, whose priorities are set through software in the UMC control registers. All the packet-DMA-based peripherals also have internal registers to define the priority level of their initiated transactions.

Some masters do not have apriority allocation register of their own. For these masters, a priority allocation register is provided for them and described Section 9.4.1 and Section 9.4.2. For all other modules, see the respective User Guides in Section 10.3 for programmable priority registers.

9.4.1 Packet DMA Priority Allocation (PKTDMA_PRI_ALLOC) Register

The packet DMA secondary port is one master port that does not have priority allocation register inside the IP. The priority level for transaction from this master port is described by PKTDMA_PRI_ALLOC register in Figure 9-6 and Table 9-3.

Figure 9-6. Packet DMA Priority Allocation Register (PKTDMA_PRI_ALLOC)

31	3	2	0
Reserved		PKTDMA_PRI	
R/W-00000000000000000000000001000011		RW-000	

LEGEND: R/W = Read/Write; R = Read only; -*n* = value after reset

Copyright © 2012–2016, Texas Instruments Incorporated

Table 9-3. Packet DMA Priority Allocation Register (PKTDMA_PRI_ALLOC) Field Descriptions

BIT	NAME	DESCRIPTION
31-3	Reserved	Reserved
2-0	PKTDMA_PRI	Control the priority level for the transactions from packet DMA master port, which access the external linking RAM.

9.4.2 EMAC / uPP Priority Allocation (EMAC_UPP_PRI_ALLOC) Register

The EMAC and uPP are master ports that do not have priority allocation registers inside the IP. The priority level for transaction from these master ports is described by EMAC_UPP_PRI_ALLOC register in Figure 9-7 and Table 9-4.

Figure 9-7. EMAC / uPP Priority Allocation Register (EMAC_UPP_PRI_ALLOC)

31 27	26 24	23 19	18 16	15 11	10 8	7 3	2 0
Reserved	EMAC_EPRI	Reserved	EMAC_PRI	Reserved	UPP_EPRI	Reserved	UPP_PRI
R-00000	RW-110	R-00000	RW-111	R-00000	RW-110	R-00000	RW-111

LEGEND: R/W = Read/Write; R = Read only; -*n* = value after reset

Table 9-4. EMAC / uPP Priority Allocation Register (EMAC_UPP_PRI_ALLOC) Field Descriptions

BIT	NAME	DESCRIPTION
31-27	Reserved	Reserved
26-24	EMAC_EPRI	Control the maximum priority level for the transactions from EMAC master port.
23-19	Reserved	Reserved
18-16	EMAC_PRI	Control the priority level for the transactions from EMAC master port.
15-11	Reserved	Reserved
10-8	UPP_EPRI	Control the maximum priority level for the transactions from uPP master port.
7-3	Reserved	Reserved
2-0	UPP_PRI	Control the priority level for the transactions from uPP master port.

Copyright © 2012–2016, Texas Instruments Incorporated

10 Device and Documentation Support

10.1 Device Nomenclature

To designate the stages in the product development cycle, TI assigns prefixes to the part numbers of all DSP devices and support tools. Each DSP commercial family member has one of three prefixes: TMX, TMP, or TMS (for example, TMX320CMH). Texas Instruments recommends two of three possible prefix designators for its support tools: TMDX and TMDS. These prefixes represent evolutionary stages of product development from engineering prototypes (TMX/TMDX) through fully qualified production devices/tools (TMS/TMDS).

Device development evolutionary flow:

- **TMX:** Experimental device that is not necessarily representative of the final device's electrical specifications
- **TMP:** Final silicon die that conforms to the device's electrical specifications but has not completed quality and reliability verification
- **TMS:** Fully qualified production device

Support tool development evolutionary flow:

- **TMDX:** Development-support product that has not yet completed Texas Instruments internal qualification testing.
- **TMDS:** Fully qualified development-support product

TMX and TMP devices and TMDX development-support tools are shipped with the following disclaimer:

- **"Developmental product is intended for internal evaluation purposes."**

TMS devices and TMDS development-support tools have been characterized fully, and the quality and reliability of the device have been demonstrated fully. TI's standard warranty applies.

Predictions show that prototype devices (TMX or TMP) have a greater failure rate than the standard production devices. Texas Instruments recommends that these devices not be used in any production system because their expected end-use failure rate still is undefined. Only qualified production devices are to be used.

TI device nomenclature also includes a suffix with the device family name. This suffix indicates the package type (for example, CZH), the temperature range (for example, blank is the default case temperature range), and the device speed range, in Megahertz (for example, blank is 1000 MHz [1 GHz]).

For device part numbers and further ordering information for C665x in the CZH or GZH package type, see the TI website www.ti.com or contact your TI sales representative.

Figure 10-1 provides a legend for reading the complete device name for any C66x KeyStone device.

Copyright © 2012–2016, Texas Instruments Incorporated

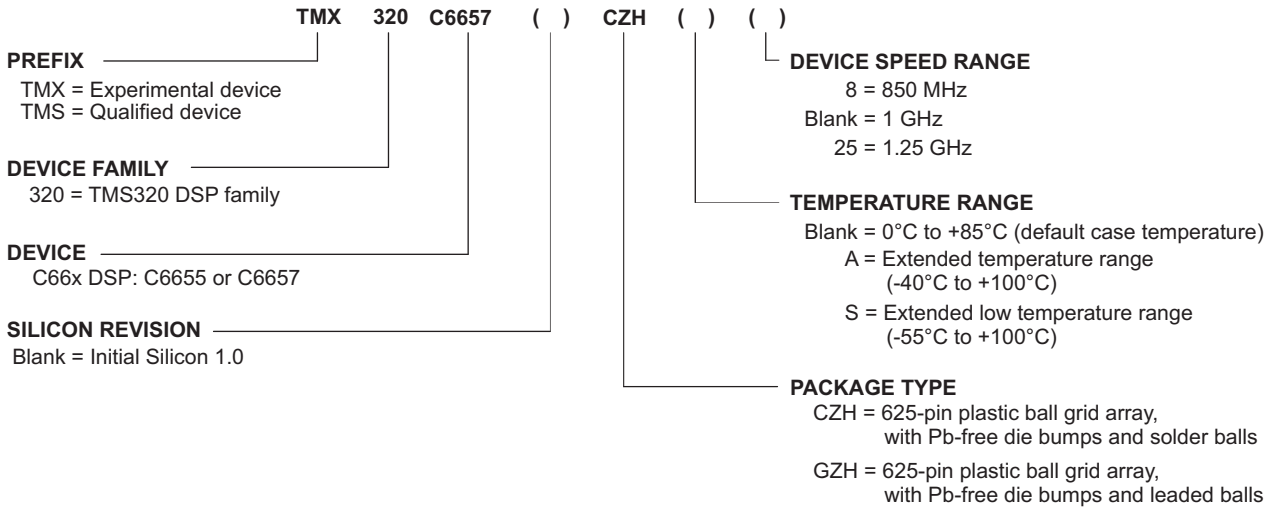

Figure 10-1. C66x DSP Device Nomenclature (including the C665x)

10.2 Tools and Software

In case the customer would like to develop their own features and software on the C665x device, TI offers an extensive line of development tools for the TMS320C6000™ DSP platform, including tools to evaluate the performance of the processors, generate code, develop algorithm implementations, and fully integrate and debug software and hardware modules. The tool's support documentation is electronically available within the Code Composer Studio™ Integrated Development Environment (IDE).

The following products support development of C6000™ DSP-based applications:

- **Software Development Tools:**
  - Code Composer Studio™ Integrated Development Environment (IDE), including Editor C/C++/Assembly Code Generation, and Debug plus additional development tools.
  - Scalable, Real-Time Foundation Software (DSP/BIOS™), which provides the basic run-time target software needed to support any DSP application.
- **Hardware Development Tools:**
  - Extended Development System (XDS™) Emulator (supports C6000™ DSP multiprocessor system debug)
  - EVM (Evaluation Module)

Copyright © 2012–2016, Texas Instruments Incorporated

10.3 Documentation Support

These documents describe the C665x Fixed and Floating-Point Digital Signal Processor. Copies of these documents are available on the Internet at www.ti.com.

Receiving Notification of Documentation Updates

To receive notification of documentation updates—including silicon errata—go to the product folder for your device on ti.com. In the upper right-hand corner, click the "Alert me" button. This registers you to receive a weekly digest of product information that has changed (if any). For change details, check the revision history of any revised document.

Application Reports

DDR3 Design Guide for KeyStone Devices

DSP Power Consumption Summary for KeyStone Devices

Emulation and Trace Headers Technical Reference

Hardware Design Guide for KeyStone Devices

Using Advanced Event Triggering to Debug Real-Time Problems in High Speed Embedded Microprocessor Systems

Using Advanced Event Triggering to Find and Fix Intermittent Real-Time Bugs

Using IBIS Models for Timing Analysis

User's Guides

64-bit Timer (Timer 64) for KeyStone Devices User's Guide

Bootloader for the C66x DSP User's Guide

C66x CorePac User's Guide

C66x CPU and Instruction Set Reference Guide

C66x DSP Cache User's Guide

DDR3 Memory Controller for KeyStone Devices User's Guide

Debug and Trace for KeyStone I Devices User's Guide

Enhanced Direct Memory Access 3 (EDMA3) for KeyStone Devices User's Guide

External Memory Interface (EMIF16) for KeyStone Devices User's Guide

General-Purpose Input/Output (GPIO) for KeyStone Devices User's Guide

Ethernet Media Access Controller (EMAC) for KeyStone Devices User's Guide

HyperLink for KeyStone Devices User's Guide

Inter Integrated Circuit (I^2C) for KeyStone Devices User's Guide

Chip Interrupt Controller (CIC) for KeyStone Devices User's Guide

Memory Protection Unit (MPU) for KeyStone Devices User's Guide

Multichannel Buffered Serial Port (McBSP) for KeyStone Devices User's Guide

Multicore Navigator for KeyStone Devices User's Guide

Peripheral Component Interconnect Express (PCIe) for KeyStone Devices User's Guide

Phase-Locked Loop (PLL) for KeyStone Devices User's Guide

Power Sleep Controller (PSC) for KeyStone Devices User's Guide

Semaphore2 Hardware Module for KeyStone Devices User's Guide

Serial Peripheral Interface (SPI) for KeyStone Devices User's Guide

Serial RapidIO (SRIO) for KeyStone Devices User's Guide

Turbo Decoder Coprocessor 3 (TCP3d) for KeyStone Devices User's Guide

Copyright © 2012–2016, Texas Instruments Incorporated

Universal Asynchronous Receiver/Transmitter (UART) for KeyStone Devices User's Guide

Universal Parallel Port (uPP) for KeyStone Architecture User's Guide

Viterbi Coprocessor (VCP2) for KeyStone Devices User's Guide

10.4 Related Links

Table 10-1 lists quick access links. Categories include technical documents, support and community resources, tools and software, and quick access to sample or buy.

Table 10-1. Related Links

PARTS	PRODUCT FOLDER	SAMPLE AND BUY	TECHNICAL DOCUMENTS	TOOLS AND SOFTWARE	SUPPORT AND COMMUNITY
TMS320C6655	Click here	Click here	Click here	Click here	Click here
TMS320C6657	Click here	Click here	Click here	Click here	Click here

10.5 Community Resources

The following links connect to TI community resources. Linked contents are provided "AS IS" by the respective contributors. They do not constitute TI specifications and do not necessarily reflect TI's views; see TI's Terms of Use.

TI E2E™ Online Community ***TI's Engineer-to-Engineer (E2E) Community.*** Created to foster collaboration among engineers. At e2e.ti.com, you can ask questions, share knowledge, explore ideas and help solve problems with fellow engineers.

TI Embedded Processors Wiki ***Texas Instruments Embedded Processors Wiki.*** Established to help developers get started with Embedded Processors from Texas Instruments and to foster innovation and growth of general knowledge about the hardware and software surrounding these devices.

10.6 Trademarks

E2E is a trademark of Texas Instruments.
SmartReflex, TMS320C6000 are trademarks of Texas Instruments Inc.
All other trademarks are the property of their respective owners.

10.7 Electrostatic Discharge Caution



This integrated circuit can be damaged by ESD. Texas Instruments recommends that all integrated circuits be handled with appropriate precautions. Failure to observe proper handling and installation procedures can cause damage.

ESD damage can range from subtle performance degradation to complete device failure. Precision integrated circuits may be more susceptible to damage because very small parametric changes could cause the device not to meet its published specifications.

10.8 Glossary

TI Glossary This glossary lists and explains terms, acronyms, and definitions.

Copyright © 2012–2016, Texas Instruments Incorporated

11 Mechanical Packaging and Orderable Information

11.1 Packaging Information

The following pages include mechanical packaging and orderable information. This information is the most current data available for the designated devices. This data is subject to change without notice and revision of this document. For browser-based versions of this data sheet, see the left-hand navigation.

Copyright © 2012–2016, Texas Instruments Incorporated

PACKAGING INFORMATION

Orderable Device	Status (1)	Package Type	Package Drawing	Pins	Package Qty	Eco Plan (2)	Lead/Ball Finish (6)	MSL Peak Temp (3)	Op Temp (°C)	Device Marking (4/5)	Samples
TMS320C6655CZH	ACTIVE	FCBGA	CZH	625	60	Green (RoHS & no Sb/Br)	SNAGCU	Level-3-245C-168 HR	0 to 85	TMS320C6655CZH @2012 TI	Samples
TMS320C6655CZH25	ACTIVE	FCBGA	CZH	625	60	Green (RoHS & no Sb/Br)	SNAGCU	Level-3-245C-168 HR	0 to 85	TMS320C6655CZH @2012 TI 1.25GHZ	Samples
TMS320C6655CZHA	ACTIVE	FCBGA	CZH	625	60	Green (RoHS & no Sb/Br)	SNAGCU	Level-3-245C-168 HR	-40 to 100	TMS320C6655CZH @2012 TI A1GHZ	Samples
TMS320C6655CZHA25	ACTIVE	FCBGA	CZH	625	60	Green (RoHS & no Sb/Br)	SNAGCU	Level-3-245C-168 HR	-40 to 100	TMS320C6655CZH @2012 TI A1.25GHZ	Samples
TMS320C6655GZHA	ACTIVE	FCBGA	GZH	625	60	TBD	SNPB	Level-3-220C-168 HR	-40 to 100	TMS320C6655GZH @2012 TI A1GHZ	Samples
TMS320C6655SCZH	ACTIVE	FCBGA	CZH	625		TBD	Call TI	Call TI	0 to 85	TMS320C6655SCZH @2012 TI	Samples
TMS320C6657CZH	ACTIVE	FCBGA	CZH	625	60	Green (RoHS & no Sb/Br)	SNAGCU	Level-3-245C-168 HR	0 to 85	TMS320C6657CZH @2012 TI	Samples
TMS320C6657CZH25	ACTIVE	FCBGA	CZH	625	60	Green (RoHS & no Sb/Br)	SNAGCU	Level-3-245C-168 HR	0 to 85	TMS320C6657CZH @2012 TI 1.25GHZ	Samples
TMS320C6657CZH8	ACTIVE	FCBGA	CZH	625	60	Green (RoHS & no Sb/Br)	SNAGCU	Level-3-245C-168 HR	0 to 85	TMS320C6657CZH @2012 TI 850MHZ	Samples
TMS320C6657CZHA	ACTIVE	FCBGA	CZH	625	60	Green (RoHS & no Sb/Br)	SNAGCU	Level-3-245C-168 HR	-40 to 100	TMS320C6657CZH @2012 TI A1GHZ	Samples
TMS320C6657CZHA25	ACTIVE	FCBGA	CZH	625	60	Green (RoHS & no Sb/Br)	SNAGCU	Level-3-245C-168 HR	-40 to 100	TMS320C6657CZH @2012 TI A1.25GHZ	Samples
TMS320C6657GZHA	ACTIVE	FCBGA	GZH	625	60	TBD	SNPB	Level-3-220C-168 HR	-40 to 100	TMS320C6657GZH @2012 TI A1GHZ	Samples
TMS320C6657SCZH	ACTIVE	FCBGA	CZH	625		TBD	Call TI	Call TI	0 to 85	TMS320C6657SCZH @2012 TI	Samples

(1) The marketing status values are defined as follows:
ACTIVE: Product device recommended for new designs.
LIFEBUY: TI has announced that the device will be discontinued, and a lifetime-buy period is in effect.
NRND: Not recommended for new designs. Device is in production to support existing customers, but TI does not recommend using this part in a new design.
PREVIEW: Device has been announced but is not in production. Samples may or may not be available.
OBSOLETE: TI has discontinued the production of the device.

(2) **RoHS:** TI defines "RoHS" to mean semiconductor products that are compliant with the current EU RoHS requirements for all 10 RoHS substances, including the requirement that RoHS substance do not exceed 0.1% by weight in homogeneous materials. Where designed to be soldered at high temperatures, "RoHS" products are suitable for use in specified lead-free processes. TI may reference these types of products as "Pb-Free".
RoHS Exempt: TI defines "RoHS Exempt" to mean products that contain lead but are compliant with EU RoHS pursuant to a specific EU RoHS exemption.
Green: TI defines "Green" to mean the content of Chlorine (Cl) and Bromine (Br) based flame retardants meet JS709B low halogen requirements of <=1000ppm threshold. Antimony trioxide based flame retardants must also meet the <=1000ppm threshold requirement.

(3) MSL, Peak Temp. - The Moisture Sensitivity Level rating according to the JEDEC industry standard classifications, and peak solder temperature.

(4) There may be additional marking, which relates to the logo, the lot trace code information, or the environmental category on the device.

(5) Multiple Device Markings will be inside parentheses. Only one Device Marking contained in parentheses and separated by a "~" will appear on a device. If a line is indented then it is a continuation of the previous line and the two combined represent the entire Device Marking for that device.

(6) Lead/Ball Finish - Orderable Devices may have multiple material finish options. Finish options are separated by a vertical ruled line. Lead/Ball Finish values may wrap to two lines if the finish value exceeds the maximum column width.

Important Information and Disclaimer: The information provided on this page represents TI's knowledge and belief as of the date that it is provided. TI bases its knowledge and belief on information provided by third parties, and makes no representation or warranty as to the accuracy of such information. Efforts are underway to better integrate information from third parties. TI has taken and continues to take reasonable steps to provide representative and accurate information but may not have conducted destructive testing or chemical analysis on incoming materials and chemicals. TI and TI suppliers consider certain information to be proprietary, and thus CAS numbers and other limited information may not be available for release.

In no event shall TI's liability arising out of such information exceed the total purchase price of the TI part(s) at issue in this document sold by TI to Customer on an annual basis.

GZH (S–PBGA–N625) PLASTIC BALL GRID ARRAY

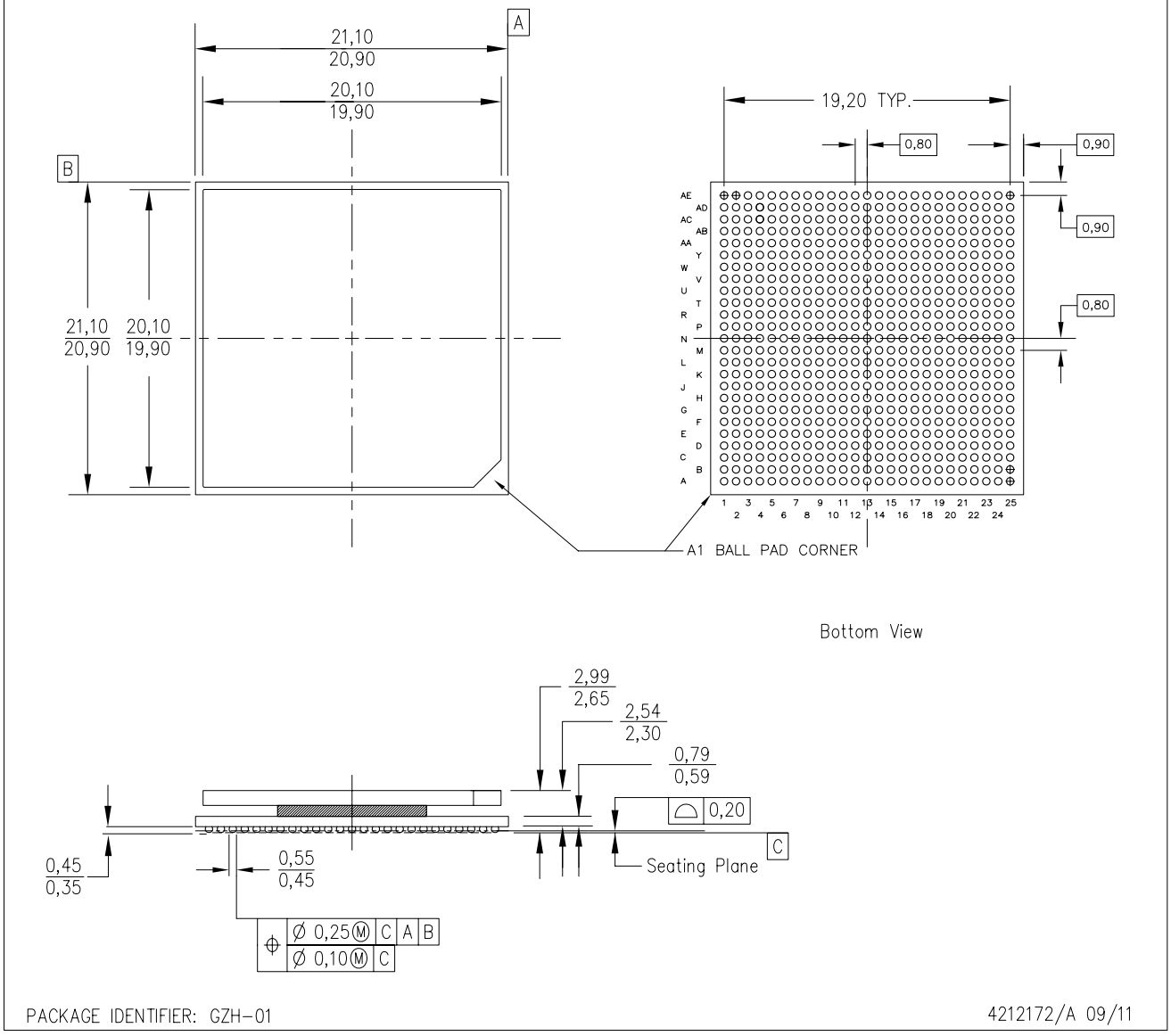

NOTES:
A. All linear dimensions are in millimeters. Dimensioning and tolerancing per ASME Y14.5M–1994.
B. This drawing is subject to change without notice.
C. Flip chip application only.
D. Thermally enhanced plastic package with heat slug (HSL).

CZH (S–PBGA–N625) PLASTIC BALL GRID ARRAY

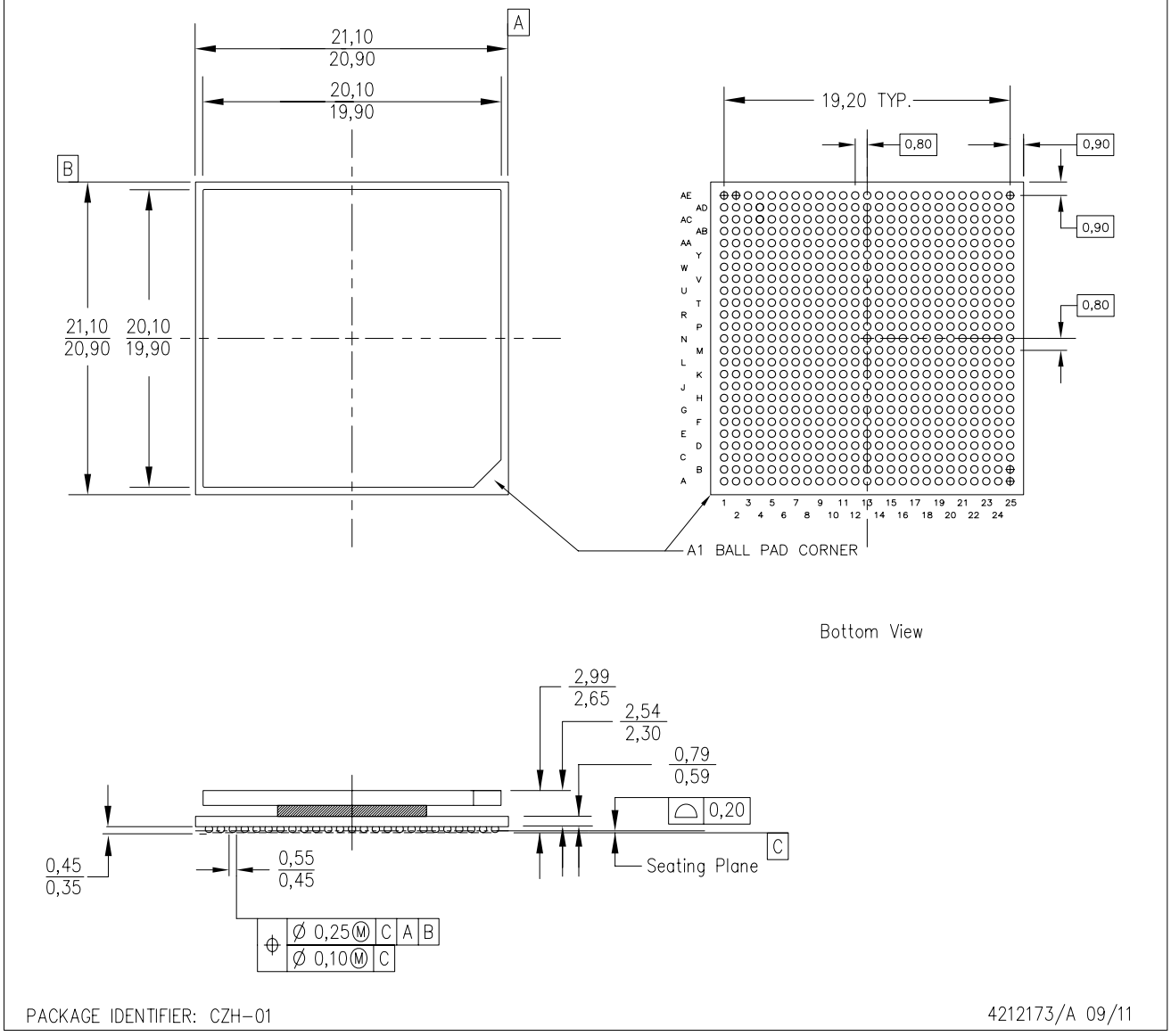

PACKAGE IDENTIFIER: CZH–01 4212173/A 09/11

NOTES:
A. All linear dimensions are in millimeters. Dimensioning and tolerancing per ASME Y14.5M–1994.
B. This drawing is subject to change without notice.
C. Flip chip application only.
D. Thermally enhanced plastic package with heat slug (HSL).
E. Pb–free die bump and solder ball.

IMPORTANT NOTICE

Texas Instruments Incorporated (TI) reserves the right to make corrections, enhancements, improvements and other changes to its semiconductor products and services per JESD46, latest issue, and to discontinue any product or service per JESD48, latest issue. Buyers should obtain the latest relevant information before placing orders and should verify that such information is current and complete.

TI's published terms of sale for semiconductor products (http://www.ti.com/sc/docs/stdterms.htm) apply to the sale of packaged integrated circuit products that TI has qualified and released to market. Additional terms may apply to the use or sale of other types of TI products and services.

Reproduction of significant portions of TI information in TI data sheets is permissible only if reproduction is without alteration and is accompanied by all associated warranties, conditions, limitations, and notices. TI is not responsible or liable for such reproduced documentation. Information of third parties may be subject to additional restrictions. Resale of TI products or services with statements different from or beyond the parameters stated by TI for that product or service voids all express and any implied warranties for the associated TI product or service and is an unfair and deceptive business practice. TI is not responsible or liable for any such statements.

Buyers and others who are developing systems that incorporate TI products (collectively, "Designers") understand and agree that Designers remain responsible for using their independent analysis, evaluation and judgment in designing their applications and that Designers have full and exclusive responsibility to assure the safety of Designers' applications and compliance of their applications (and of all TI products used in or for Designers' applications) with all applicable regulations, laws and other applicable requirements. Designer represents that, with respect to their applications, Designer has all the necessary expertise to create and implement safeguards that (1) anticipate dangerous consequences of failures, (2) monitor failures and their consequences, and (3) lessen the likelihood of failures that might cause harm and take appropriate actions. Designer agrees that prior to using or distributing any applications that include TI products, Designer will thoroughly test such applications and the functionality of such TI products as used in such applications.

TI's provision of technical, application or other design advice, quality characterization, reliability data or other services or information, including, but not limited to, reference designs and materials relating to evaluation modules, (collectively, "TI Resources") are intended to assist designers who are developing applications that incorporate TI products; by downloading, accessing or using TI Resources in any way, Designer (individually or, if Designer is acting on behalf of a company, Designer's company) agrees to use any particular TI Resource solely for this purpose and subject to the terms of this Notice.

TI's provision of TI Resources does not expand or otherwise alter TI's applicable published warranties or warranty disclaimers for TI products, and no additional obligations or liabilities arise from TI providing such TI Resources. TI reserves the right to make corrections, enhancements, improvements and other changes to its TI Resources. TI has not conducted any testing other than that specifically described in the published documentation for a particular TI Resource.

Designer is authorized to use, copy and modify any individual TI Resource only in connection with the development of applications that include the TI product(s) identified in such TI Resource. NO OTHER LICENSE, EXPRESS OR IMPLIED, BY ESTOPPEL OR OTHERWISE TO ANY OTHER TI INTELLECTUAL PROPERTY RIGHT, AND NO LICENSE TO ANY TECHNOLOGY OR INTELLECTUAL PROPERTY RIGHT OF TI OR ANY THIRD PARTY IS GRANTED HEREIN, including but not limited to any patent right, copyright, mask work right, or other intellectual property right relating to any combination, machine, or process in which TI products or services are used. Information regarding or referencing third-party products or services does not constitute a license to use such products or services, or a warranty or endorsement thereof. Use of TI Resources may require a license from a third party under the patents or other intellectual property of the third party, or a license from TI under the patents or other intellectual property of TI.

TI RESOURCES ARE PROVIDED "AS IS" AND WITH ALL FAULTS. TI DISCLAIMS ALL OTHER WARRANTIES OR REPRESENTATIONS, EXPRESS OR IMPLIED, REGARDING RESOURCES OR USE THEREOF, INCLUDING BUT NOT LIMITED TO ACCURACY OR COMPLETENESS, TITLE, ANY EPIDEMIC FAILURE WARRANTY AND ANY IMPLIED WARRANTIES OF MERCHANTABILITY, FITNESS FOR A PARTICULAR PURPOSE, AND NON-INFRINGEMENT OF ANY THIRD PARTY INTELLECTUAL PROPERTY RIGHTS. TI SHALL NOT BE LIABLE FOR AND SHALL NOT DEFEND OR INDEMNIFY DESIGNER AGAINST ANY CLAIM, INCLUDING BUT NOT LIMITED TO ANY INFRINGEMENT CLAIM THAT RELATES TO OR IS BASED ON ANY COMBINATION OF PRODUCTS EVEN IF DESCRIBED IN TI RESOURCES OR OTHERWISE. IN NO EVENT SHALL TI BE LIABLE FOR ANY ACTUAL, DIRECT, SPECIAL, COLLATERAL, INDIRECT, PUNITIVE, INCIDENTAL, CONSEQUENTIAL OR EXEMPLARY DAMAGES IN CONNECTION WITH OR ARISING OUT OF TI RESOURCES OR USE THEREOF, AND REGARDLESS OF WHETHER TI HAS BEEN ADVISED OF THE POSSIBILITY OF SUCH DAMAGES.

Unless TI has explicitly designated an individual product as meeting the requirements of a particular industry standard (e.g., ISO/TS 16949 and ISO 26262), TI is not responsible for any failure to meet such industry standard requirements.

Where TI specifically promotes products as facilitating functional safety or as compliant with industry functional safety standards, such products are intended to help enable customers to design and create their own applications that meet applicable functional safety standards and requirements. Using products in an application does not by itself establish any safety features in the application. Designers must ensure compliance with safety-related requirements and standards applicable to their applications. Designer may not use any TI products in life-critical medical equipment unless authorized officers of the parties have executed a special contract specifically governing such use. Life-critical medical equipment is medical equipment where failure of such equipment would cause serious bodily injury or death (e.g., life support, pacemakers, defibrillators, heart pumps, neurostimulators, and implantables). Such equipment includes, without limitation, all medical devices identified by the U.S. Food and Drug Administration as Class III devices and equivalent classifications outside the U.S.

TI may expressly designate certain products as completing a particular qualification (e.g., Q100, Military Grade, or Enhanced Product). Designers agree that it has the necessary expertise to select the product with the appropriate qualification designation for their applications and that proper product selection is at Designers' own risk. Designers are solely responsible for compliance with all legal and regulatory requirements in connection with such selection.

Designer will fully indemnify TI and its representatives against any damages, costs, losses, and/or liabilities arising out of Designer's non-compliance with the terms and provisions of this Notice.

Mailing Address: Texas Instruments, Post Office Box 655303, Dallas, Texas 75265
Copyright © 2018, Texas Instruments Incorporated