TRS202E 5-V Dual RS-232 Line Driver and Receiver With ±15-kV IEC ESD Protection

1 Features

- IEC61000-4-2 (Level 4) ESD Protection for RS-232 Bus Pins:
  - ±8-kV Contact Discharge
  - ±15-k-V Air-Gap Discharge
  - ±15-kV Human-Body Model
- Meets or Exceeds the Requirements of TIA/EIA-232-F and ITU v.28 Standards
- Operates at 5-V V_{CC} Supply
- Operates Up to 120 kbit/s
- External Capacitors: 4 × 0.1 µF or 4 × 1 µF
- Latch-Up Performance Exceeds 100 mA Per JESD 78, Class II

2 Applications

- Battery-Powered Systems
- Notebooks
- Laptops
- Set-Top Boxes
- Hand-Held Equipment

3 Description

The TRS202E device consists of two line drivers, two line receivers, and a dual charge-pump circuit. TRS202E has IEC61000-4-2 (Level 4) ESD protection pin-to-pin (serial-port connection pins, including GND). The device meets the requirements of TIA/EIA-232-F and provides the electrical interface between an asynchronous communication controller and the serial-port connector. The charge pump and four small external capacitors allow operation from a single 5-V supply. The device operates at data signaling rates up to 120 kbit/s and a maximum of 30-V/µs driver output slew rate.

Device Information(1)

PART NUMBER	PACKAGE	BODY SIZE (NOM)
TRS202ECD TRS202EID	SOIC (16)	9.90 mm × 3.91 mm
TRS202ECDW TRS202EIDW	SOIC (16)	10.30 mm × 7.50 mm
TRS202ECN TRS202EIN	PDIP (16)	19.30 mm × 6.35 mm
TRS202ECPW TRS202EIPW	TSSOP (16)	5.00 mm × 4.40 mm

(1) For all available packages, see the orderable addendum at the end of the data sheet.

Logic Diagram (Positive Logic)

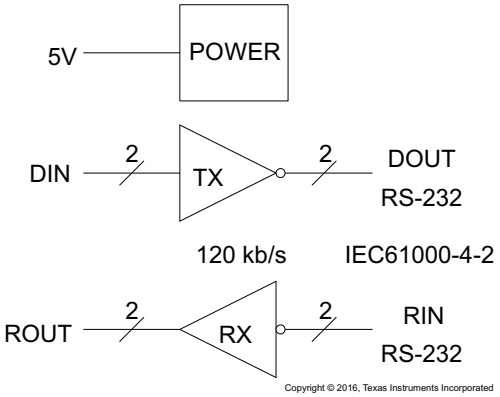

Copyright © 2016, Texas Instruments Incorporated

An IMPORTANT NOTICE at the end of this data sheet addresses availability, warranty, changes, use in safety-critical applications, intellectual property matters and other important disclaimers. PRODUCTION DATA.

Table of Contents

1 Features ... 1
2 Applications ... 1
3 Description ... 1
4 Revision History ... 2
5 Pin Configuration and Functions ... 3
6 Specifications ... 4
6.1 Absolute Maximum Ratings ... 4
6.2 ESD Ratings ... 4
6.3 Recommended Operating Conditions ... 4
6.4 Thermal Information ... 5
6.5 Electrical Characteristics ... 5
6.6 Electrical Characteristics: Driver ... 5
6.7 Electrical Characteristics: Receiver ... 5
6.8 Switching Characteristics: Driver ... 6
6.9 Switching Characteristics: Receiver ... 6
6.10 Typical Characteristics ... 6
7 Parameter Measurement Information ... 8
8 Detailed Description ... 9
8.1 Overview ... 9
8.2 Functional Block Diagram ... 9
8.3 Feature Description ... 9
8.4 Device Functional Modes ... 9
9 Application and Implementation ... 11
9.1 Application Information ... 11
9.2 Typical Application ... 11
10 Power Supply Recommendations ... 13
11 Layout ... 13
11.1 Layout Guidelines ... 13
11.2 Layout Example ... 13
12 Device and Documentation Support ... 14
12.1 Receiving Notification of Documentation Updates ... 14
12.2 Community Resources ... 14
12.3 Trademarks ... 14
12.4 Electrostatic Discharge Caution ... 14
12.5 Glossary ... 14

4 Revision History

NOTE: Page numbers for previous revisions may differ from page numbers in the current version.

Changes from Revision D (November 2012) to Revision E — **Page**

- Added *ESD Ratings* table, *Feature Description* section, *Device Functional Modes*, *Application and Implementation* section, *Power Supply Recommendations* section, *Layout* section, *Device and Documentation Support* section, and *Mechanical, Packaging, and Orderable Information* section ... 1
- Deleted *Ordering Information* table; see *Package Option Addendum* at the end of the data sheet ... 1
- Changed Package thermal impedance, $R_{\theta JA}$, values in Thermal Information table From: 73°C/W To: 76.7°C/W (D), From: 57°C/W To: 77.1°C/W (DW), From: 67°C/W To: 44.1°C/W (N), and From: 108°C/W To: 101.7°C/W (PW) ... 5

Changes from Revision C (May 2010) to Revision D — **Page**

- Fixed I_{OS} values typo in *Electrical Characteristics* table, changed – to ± ... 5

Copyright © 2007–2016, Texas Instruments Incorporated

5 Pin Configuration and Functions

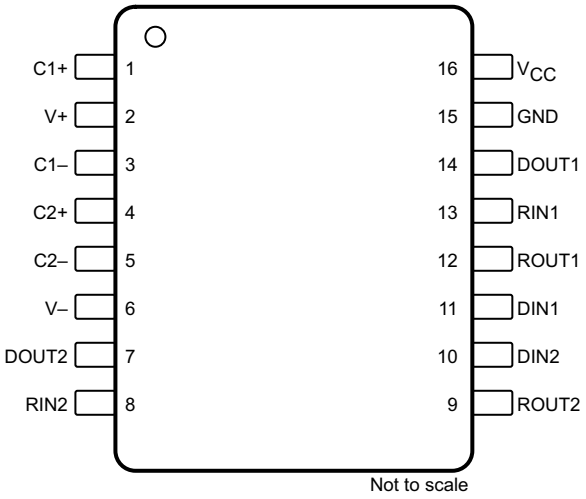

Pin Functions

PIN		I/O	DESCRIPTION
NO.	NAME		
1	C1+	—	Positive lead of C1 capacitor
2	V+	O	Positive charge pump output for storage capacitor only
3	C1–	—	Negative lead of C1 capacitor
4	C2+	—	Positive lead of C2 capacitor
5	C2–	—	Negative lead of C2 capacitor
6	V–	O	Negative charge pump output for storage capacitor only
7	DOUT2	O	RS-232 line data output (to remote RS-232 system)
8	RIN2	I	RS-232 line data input (from remote RS-232 system)
9	ROUT2	O	Logic data output (to UART)
10	DIN2	I	Logic data input (from UART)
11	DIN1	I	Logic data input (from UART)
12	ROUT1	O	Logic data output (to UART)
13	RIN1	I	RS-232 line data input (from remote RS-232 system)
14	DOUT1	O	RS-232 line data output (to remote RS-232 system)
15	GND	—	Ground
16	V_{CC}	—	Supply voltage, connect to external 5-V power supply

Copyright © 2007–2016, Texas Instruments Incorporated

6 Specifications

6.1 Absolute Maximum Ratings

over operating free-air temperature range (unless otherwise noted)(1)(2)

		MIN	MAX	UNIT
Supply voltage, V_{CC}(2)		–0.3	6	V
Positive charge pump voltage, V+(2)		V_{CC} – 0.3	14	V
Negative charge pump voltage, V–		–14	0.3	V
Input voltage, V_I	Drivers	–0.3	V+ + 0.3	V
	Receivers		±30	
Output voltage, V_O	Drivers	V– – 0.3	V+ + 0.3	V
	Receivers	–0.3	V_{CC} + 0.3	
Short-circuit duration, D_{OUT}		Continuous		
Operating virtual junction temperature, T_J			150	°C
Storage temperature, T_{stg}		–65	150	°C

(1) Stresses beyond those listed under *Absolute Maximum Ratings* may cause permanent damage to the device. These are stress ratings only, which do not imply functional operation of the device at these or any other conditions beyond those indicated under *Recommended Operating Conditions*. Exposure to absolute-maximum-rated conditions for extended periods may affect device reliability.
(2) All voltages are with respect to network GND.

6.2 ESD Ratings

				VALUE	UNIT
$V_{(ESD)}$	Electrostatic discharge	Human-body model (HBM), per ANSI/ESDA/JEDEC JS-001(1)	Pins 7, 8, 13, 14, 15	±15000	V
			All other pins	±2000	
		Charged-device model (CDM), per JEDEC specification JESD22-C101(2)	All pins	±1500	
		IEC 61000-4-2 contact discharge	Pins 7, 8, 13, 14, 15	±8000	
		IEC 61000-4-2 air-gap discharge	Pins 7, 8, 13, 14, 15	±15000	

(1) JEDEC document JEP155 states that 500-V HBM allows safe manufacturing with a standard ESD control process.
(2) JEDEC document JEP157 states that 250-V CDM allows safe manufacturing with a standard ESD control process.

6.3 Recommended Operating Conditions

see Figure 9(1)

			MIN	NOM	MAX	UNIT
	Supply voltage		4.5	5	5.5	V
V_{IH}	Driver high-level input voltage (D_{IN})		2			V
V_{IL}	Driver low-level input voltage (D_{IN})				0.8	V
V_I	Driver input voltage (D_{IN})		0		5.5	V
	Receiver input voltage		–30		30	
T_A	Operating free-air temperature	TRS202EC	0		70	°C
		TRS202EI	–40		85	

(1) Test conditions are C1 to C4 = 0.1 µF at V_{CC} = 5 V ±0.5 V.

Copyright © 2007–2016, Texas Instruments Incorporated

6.4 Thermal Information

THERMAL METRIC[1]		TRS202E				UNIT
		D (SOIC)	DW (SOIC)	N (PDIP)	PW (TSSOP)	
		16 PINS	16 PINS	16 PINS	16 PINS	
$R_{\theta JA}$	Junction-to-ambient thermal resistance	76.7	77.1	44.1	101.7	°C/W
$R_{\theta JC(top)}$	Junction-to-case (top) thermal resistance	37.4	39.9	30.8	37	°C/W
$R_{\theta JB}$	Junction-to-board thermal resistance	34.2	41.8	24.2	46.6	°C/W
ψ_{JT}	Junction-to-top characterization parameter	7	12.9	15.2	2.8	°C/W
ψ_{JB}	Junction-to-board characterization parameter	33.9	41.3	24	46	°C/W

(1) For more information about traditional and new thermal metrics, see the *Semiconductor and IC Package Thermal Metrics* application report.

6.5 Electrical Characteristics

over recommended ranges of supply voltage and operating free-air temperature (unless otherwise noted; see Figure 9)[1]

PARAMETER		TEST CONDITIONS	MIN	TYP[2]	MAX	UNIT
I_{CC}	Supply current	No load, V_{CC} = 5 V		8	15	mA

(1) Test conditions are C1 to C4 = 0.1 µF at V_{CC} = 5 V + 0.5 V.
(2) All typical values are at V_{CC} = 5 V and T_A = 25°C.

6.6 Electrical Characteristics: Driver

over recommended ranges of supply voltage and operating free-air temperature (unless otherwise noted) (see Figure 9)[1]

PARAMETER		TEST CONDITIONS	MIN	TYP[2]	MAX	UNIT
V_{OH}	High-level output voltage	D_{OUT} at R_L = 3 kΩ to GND, D_{IN} = GND	5	9		V
V_{OL}	Low-level output voltage	D_{OUT} at R_L = 3 kΩ to GND, D_{IN} = V_{CC}	–5	–9		V
I_{IH}	High-level input current	V_I = V_{CC}		15	200	µA
I_{IL}	Low-level input current	V_I at 0 V		–15	–200	µA
I_{OS}[3]	Short-circuit output current	V_{CC} = 5.5 V and V_O = 0 V		±10	±60	mA
r_o	Output resistance	V_{CC}, V+, V– = 0 V, and V_O = ±2 V	300			Ω

(1) Test conditions are C1 to C4 = 0.1 µF at V_{CC} = 5 V + 0.5 V.
(2) All typical values are at V_{CC} = 5 V and T_A = 25°C.
(3) Short-circuit durations must be controlled to prevent exceeding the device absolute power-dissipation ratings, and not more than one output must be shorted at a time.

6.7 Electrical Characteristics: Receiver

over recommended ranges of supply voltage and operating free-air temperature (unless otherwise noted; see Figure 9)[1]

PARAMETER		TEST CONDITIONS	MIN	TYP[2]	MAX	UNIT
V_{OH}	High-level output voltage	I_{OH} = –1 mA	3.5	V_{CC} – 0.4		V
V_{OL}	Low-level output voltage	I_{OL} = 1.6 mA			0.4	V
V_{IT+}	Positive-going input threshold voltage	V_{CC} = 5 V and T_A = 25°C		1.7	2.4	V
$V_{IT–}$	Negative-going input threshold voltage	V_{CC} = 5 V and T_A = 25°C	0.8	1.2		V
V_{hys}	Input hysteresis (V_{IT+} – $V_{IT–}$)		0.2	0.5	1	V
r_i	Input resistance	V_I = ±3 V to ±25 V	3	5	7	kΩ

(1) Test conditions are C1 to C4 = 0.1 µF at V_{CC} = 5 V + 0.5 V.
(2) All typical values are at V_{CC} = 5 V and T_A = 25°C.

Copyright © 2007–2016, Texas Instruments Incorporated

6.8 Switching Characteristics: Driver

over recommended ranges of supply voltage and operating free-air temperature (unless otherwise noted; see Figure 9)(1)

PARAMETER		TEST CONDITIONS	MIN	TYP(2)	MAX	UNIT
	Maximum data rate	C_L = 50 to 1000 pF, one D_{OUT} switching, and R_L = 3 kΩ to 7 kΩ (see Figure 6)	120			kbit/s
$t_{PLH(D)}$	Propagation delay time, low- to high-level output	C_L = 2500 pF, all drivers loaded, and R_L = 3 kΩ (see Figure 6)		2		µs
$t_{PHL(D)}$	Propagation delay time, high- to low-level output	C_L = 2500 pF, all drivers loaded, and R_L = 3 kΩ (see Figure 6)		2		µs
$t_{sk(p)}$	Pulse skew(3)	C_L = 150 to 2500 pF and R_L = 3 kΩ to 7 kΩ (see Figure 7)		300		ns
SR(tr)	Slew rate, transition region	C_L = 50 to 1000 pF, V_{CC} = 5 V, and R_L = 3 kΩ to 7 kΩ (see Figure 6)	3	6	30	V/µs

(1) Test conditions are C1 to C4 = 0.1 µF at V_{CC} = 5 V + 0.5 V.
(2) All typical values are at V_{CC} = 5 V and T_A = 25°C.
(3) Pulse skew is defined as $|t_{PLH} - t_{PHL}|$ of each channel of the same device.

6.9 Switching Characteristics: Receiver

over recommended ranges of supply voltage and operating free-air temperature (unless otherwise noted; see Figure 8)(1)

PARAMETER		TEST CONDITIONS	MIN	TYP(2)	MAX	UNIT
$t_{PLH(R)}$	Propagation delay time, low- to high-level output	C_L = 150 pF		0.5	10	µs
$t_{PHL(R)}$	Propagation delay time, high- to low-level output	C_L = 150 pF		0.5	10	µs
$t_{sk(p)}$	Pulse skew(3)			300		ns

(1) Test conditions are C1 to C4 = 0.1 µF at V_{CC} = 5 V + 0.5 V.
(2) All typical values are at V_{CC} = 5 V and T_A = 25°C.
(3) Pulse skew is defined as $|t_{PLH} - t_{PHL}|$ of each channel of the same device.

6.10 Typical Characteristics

T_A = 25°C (unless otherwise noted)

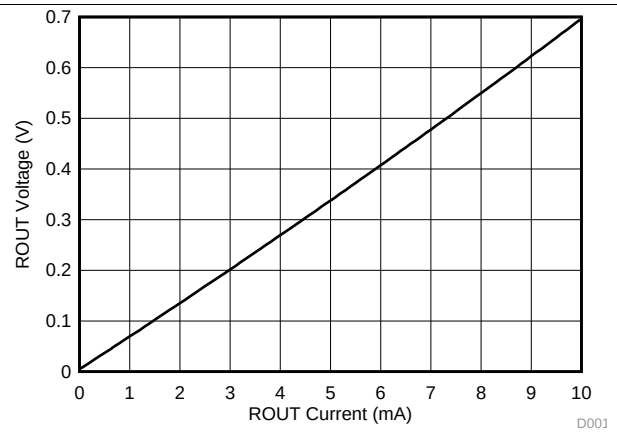

Figure 1. Receiver V_{OL} vs Output Current

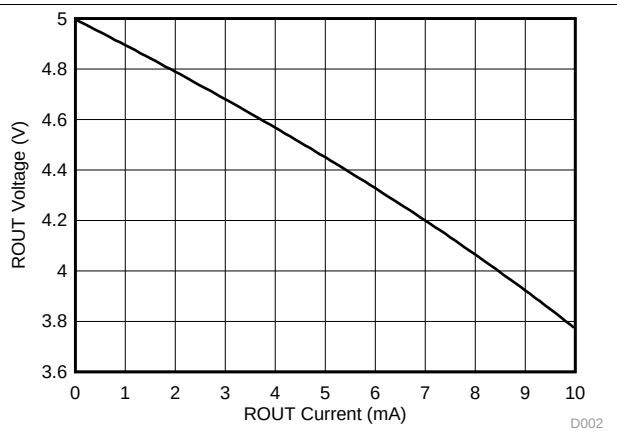

Figure 2. Receiver V_{OH} vs Output Current

Copyright © 2007–2016, Texas Instruments Incorporated

Typical Characteristics (continued)

T_A = 25°C (unless otherwise noted)

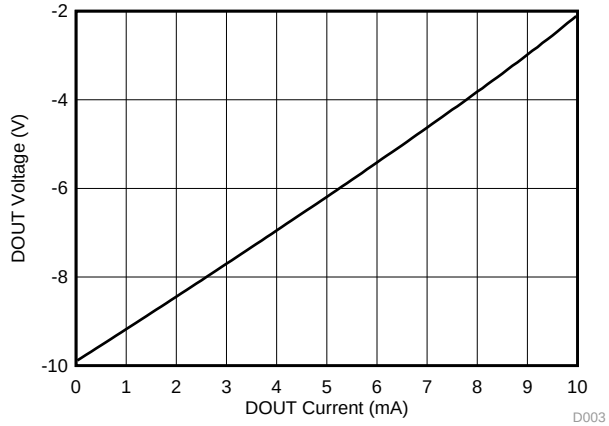

Figure 3. Driver V_{OL} vs Output Current

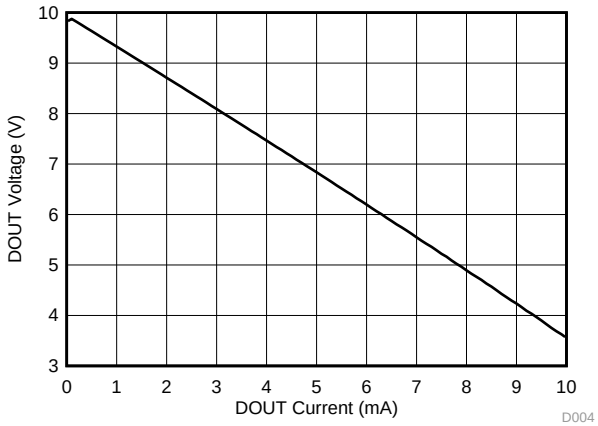

Figure 4. Driver V_{OH} vs Output Current

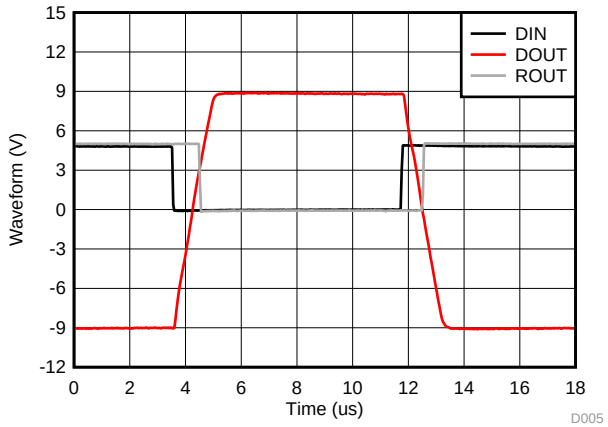

Figure 5. Driver and Receiver Loopback Waveforms

7 Parameter Measurement Information

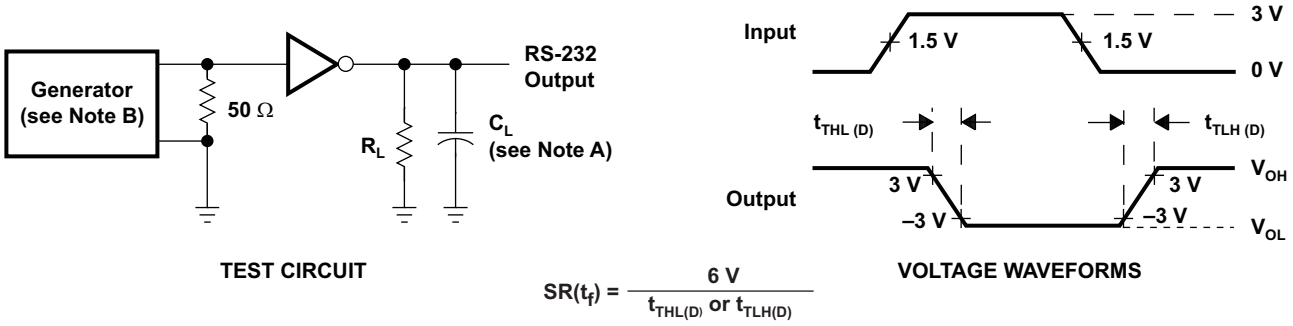

NOTES: A. C_L includes probe and jig capacitance.
B. The pulse generator has the following characteristics: PRR = 120 kbit/s, Z_O = 50 Ω, 50% duty cycle, $t_r \le 10$ ns, $t_f \le 10$ ns.

Figure 6. Driver Slew Rate

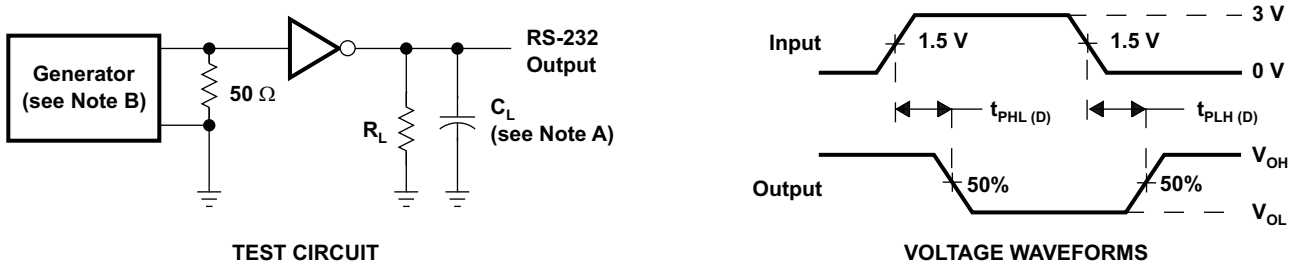

NOTES: A. C_L includes probe and jig capacitance.
B. The pulse generator has the following characteristics: PRR = 120 kbit/s, Z_O = 50 Ω, 50% duty cycle, $t_r \le 10$ ns, $t_f \le 10$ ns.

Figure 7. Driver Pulse Skew

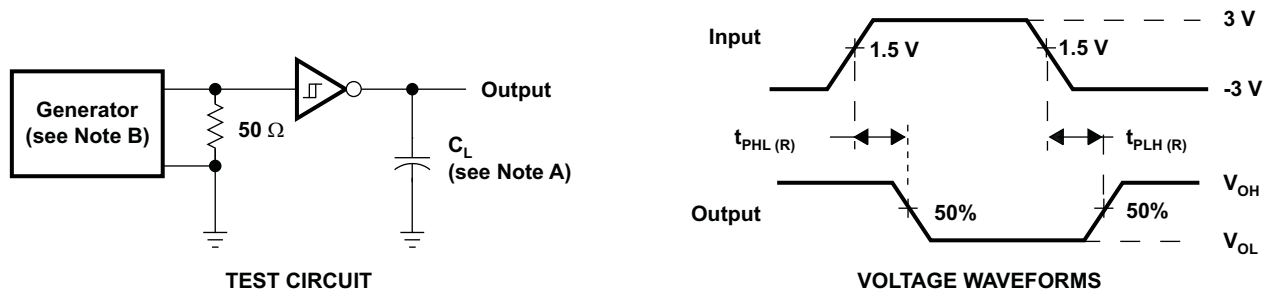

NOTES: A. C_L includes probe and jig capacitance.
B. The pulse generator has the following characteristics: Z_O = 50 Ω, 50% duty cycle, $t_r \le 10$ ns, $t_f \le 10$ ns.

Figure 8. Receiver Propagation Delay Times

Copyright © 2007–2016, Texas Instruments Incorporated

8 Detailed Description

8.1 Overview

The TRS202E device is a dual driver and receiver that includes a capacitive voltage generator using four capacitors to supply TIA/EIA-232-F voltage levels from a single 5-V supply. All RS-232 pins have 15-kV HBM and IEC61000-4-2 Air-Gap discharge protection. RS-232 pins also have 8-kV IEC61000-4-2 contact discharge protection. Each receiver converts TIA/EIA-232-F inputs to 5-V TTL/CMOS levels. These receivers have shorted and open fail safe. The receiver can accept up to ±30-V inputs and decode inputs as low as ±3 V. Each driver converts TTL/CMOS input levels into TIA/EIA-232-F levels. Outputs are protected against shorts to ground.

8.2 Functional Block Diagram

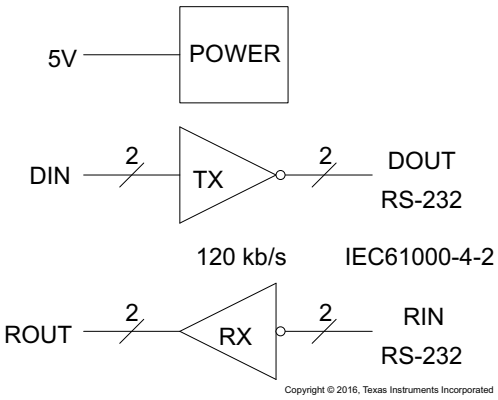

8.3 Feature Description

8.3.1 Power

The power block increases and inverts the 5-V supply for the RS-232 driver using a charge pump that requires four 0.1-µF or 1-µF external capacitors.

8.3.2 RS-232 Driver

Two drivers interface standard logic levels to RS-232 levels. The driver inputs do not have internal pullup resistors. Do not float the driver inputs.

8.3.3 RS-232 Receiver

Two Schmitt trigger receivers interface RS-232 levels to standard logic levels. Each receiver has an internal 5-kΩ load to ground. An open input results in a high output on R_{OUT}.

8.4 Device Functional Modes

8.4.1 V_{CC} Powered by 5 V

The device is in normal operation when powered by 5 V.

8.4.2 V_{CC} Unpowered

When TRS202E is unpowered, it can be safely connected to an active remote RS-232 device.

8.4.3 Truth Tables

Table 1 and Table 2 list the function for each driver and receiver (respectively).

Copyright © 2007–2016, Texas Instruments Incorporated

Table 1. Function Table for Each Driver(1)

INPUT DIN	OUTPUT DOUT
L	H
H	L

(1) H = high level, L = low level

Table 2. Function Table for Each Receiver(1)

INPUT RIN	OUTPUT ROUT
L	H
H	L
Open	H

(1) H = high level, L = low level,
Open = input disconnected or connected driver off

Copyright © 2007–2016, Texas Instruments Incorporated

9 Application and Implementation

NOTE

Information in the following applications sections is not part of the TI component specification, and TI does not warrant its accuracy or completeness. TI's customers are responsible for determining suitability of components for their purposes. Customers should validate and test their design implementation to confirm system functionality.

9.1 Application Information

For proper operation, add capacitors as shown in Figure 9. Pins 9 through 12 connect to UART or general purpose logic lines. RS-232 lines on pins 7, 8, 13, and 14 connect to a connector or cable.

9.2 Typical Application

Two driver and two receiver channels are supported for full duplex transmission with hardware flow control. The two 5kΩ-resistors are internal to the TRS202E.

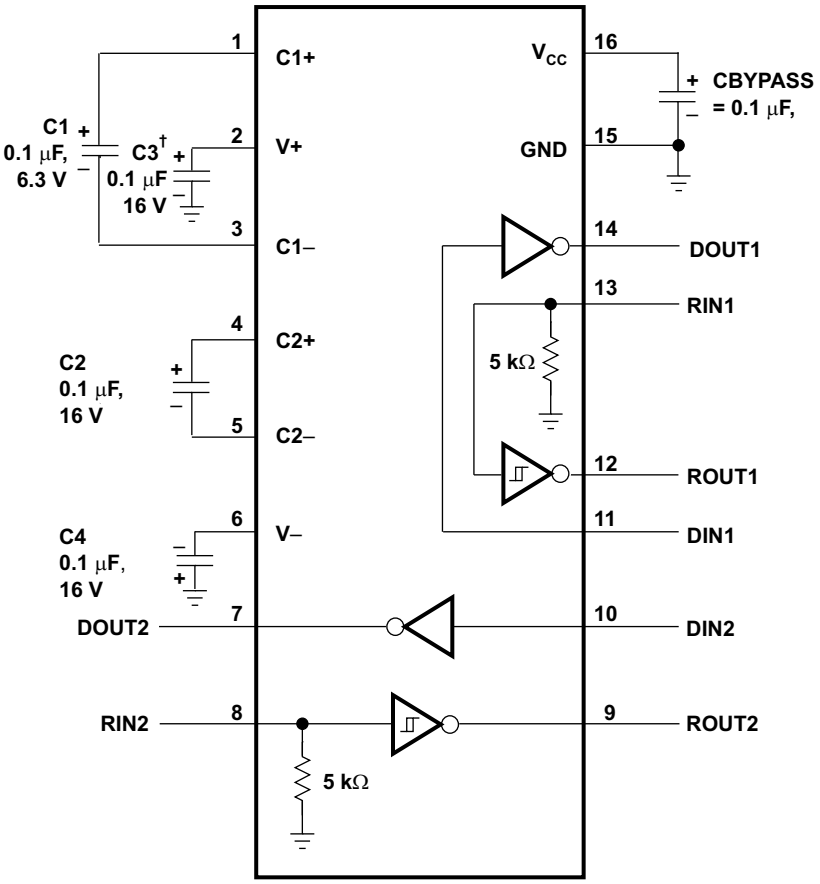

† C3 can be connected to V_{CC} or GND.

NOTES: A . Resistor values shown are nominal.

B . Nonpolarized ceramic capacitors are acceptable. If polarized tantalum or electrolytic capacitors are used, they should be connected as shown.

Copyright © 2016, Texas Instruments Incorporated

Figure 9. Typical Operating Circuit and Capacitor Values

Typical Application (continued)

9.2.1 Design Requirements

- V_{CC} minimum is 4.5 V and maximum is 5.5 V.
- Maximum recommended bit rate is 120 kbps.

9.2.2 Detailed Design Procedure

9.2.2.1 Capacitor Selection

The capacitor type used for C1 through C4 is not critical for proper operation. The TRS202E requires 0.1-µF capacitors. 1-µF capacitors are also acceptable. TI recommends ceramic dielectrics. When using the minimum recommended capacitor values, ensure the capacitance value does not degrade excessively as the operating temperature varies. If in doubt, use capacitors with a larger (for example, 2×) nominal value. The capacitors' effective series resistance (ESR), which usually rises at low temperatures, influences the amount of ripple on V+ and V–.

Bypass V_{CC} to ground with at least 0.1 µF. In applications sensitive to power-supply noise generated by the charge pumps, decouple V_{CC} to ground with a capacitor the same size as (or larger than) the charge-pump capacitors (C1 to C4).

9.2.3 Application Curves

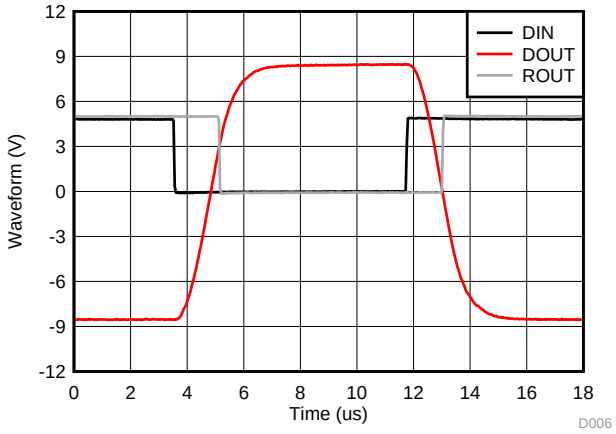

120 kbit/s, 1-nF load

Figure 10. Driver and Receiver Loopback Signal

Copyright © 2007–2016, Texas Instruments Incorporated

10 Power Supply Recommendations

The V_{CC} voltage must be connected to the same power source used for logic device connected to DIN and ROUT pins. V_{CC} must be between 4.5 V and 5.5 V.

11 Layout

11.1 Layout Guidelines

Keep the external capacitor traces short. This is more important on C1 and C2 nodes that have the fastest rise and fall times. Make the impedance from TRS202E ground pin and circuit board's ground plane as low as possible for best ESD performance. Use wide metal and multiple vias on both sides of ground pin.

11.2 Layout Example

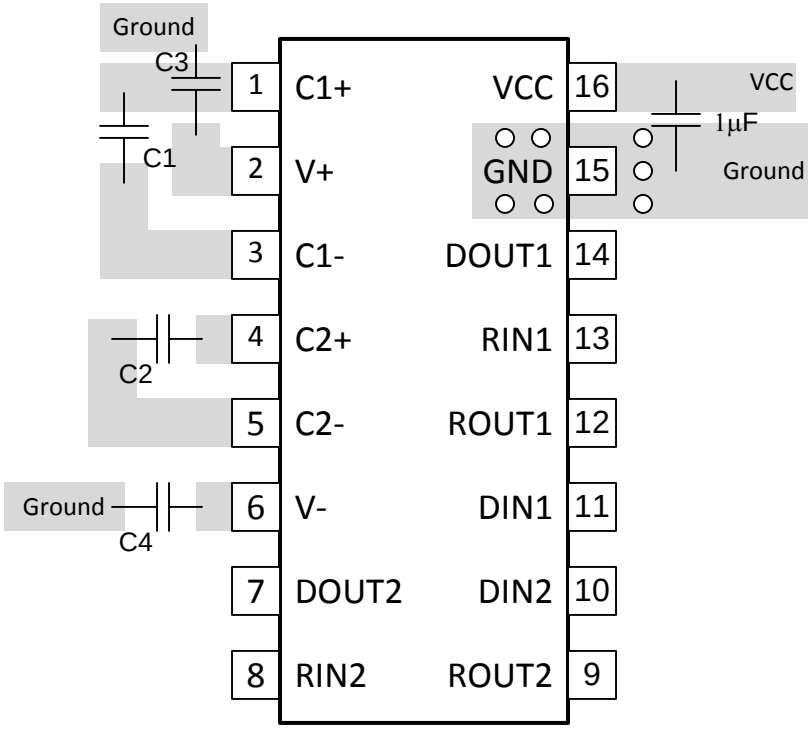

Figure 11. TRS202E Layout

12 Device and Documentation Support

12.1 Receiving Notification of Documentation Updates

To receive notification of documentation updates, navigate to the device product folder on ti.com. In the upper right corner, click on *Alert me* to register and receive a weekly digest of any product information that has changed. For change details, review the revision history included in any revised document.

12.2 Community Resources

The following links connect to TI community resources. Linked contents are provided "AS IS" by the respective contributors. They do not constitute TI specifications and do not necessarily reflect TI's views; see TI's Terms of Use.

TI E2E™ Online Community ***TI's Engineer-to-Engineer (E2E) Community.*** Created to foster collaboration among engineers. At e2e.ti.com, you can ask questions, share knowledge, explore ideas and help solve problems with fellow engineers.

Design Support ***TI's Design Support*** Quickly find helpful E2E forums along with design support tools and contact information for technical support.

12.3 Trademarks

E2E is a trademark of Texas Instruments.
All other trademarks are the property of their respective owners.

12.4 Electrostatic Discharge Caution



These devices have limited built-in ESD protection. The leads should be shorted together or the device placed in conductive foam during storage or handling to prevent electrostatic damage to the MOS gates.

12.5 Glossary

SLYZ022 — *TI Glossary*.

This glossary lists and explains terms, acronyms, and definitions.

Copyright © 2007–2016, Texas Instruments Incorporated

PACKAGING INFORMATION

Orderable Device	Status (1)	Package Type	Package Drawing	Pins	Package Qty	Eco Plan (2)	Lead/Ball Finish (6)	MSL Peak Temp (3)	Op Temp (°C)	Device Marking (4/5)	Samples
TRS202ECD	ACTIVE	SOIC	D	16	40	Green (RoHS & no Sb/Br)	CU NIPDAU	Level-1-260C-UNLIM	0 to 70	TRS202EC	Samples
TRS202ECDR	ACTIVE	SOIC	D	16	2500	Green (RoHS & no Sb/Br)	CU NIPDAU	Level-1-260C-UNLIM	0 to 70	TRS202EC	Samples
TRS202ECDRG4	ACTIVE	SOIC	D	16	2500	Green (RoHS & no Sb/Br)	CU NIPDAU	Level-1-260C-UNLIM	0 to 70	TRS202EC	Samples
TRS202ECDWR	ACTIVE	SOIC	DW	16	2000	Green (RoHS & no Sb/Br)	CU NIPDAU	Level-1-260C-UNLIM	0 to 70	TRS202EC	Samples
TRS202ECN	ACTIVE	PDIP	N	16	25	Pb-Free (RoHS)	CU NIPDAU	N / A for Pkg Type	0 to 70	TRS202ECN	Samples
TRS202ECNE4	ACTIVE	PDIP	N	16	25	Pb-Free (RoHS)	CU NIPDAU	N / A for Pkg Type	0 to 70	TRS202ECN	Samples
TRS202ECPW	ACTIVE	TSSOP	PW	16	90	Green (RoHS & no Sb/Br)	CU NIPDAU	Level-1-260C-UNLIM	0 to 70	RU02EC	Samples
TRS202ECPWR	ACTIVE	TSSOP	PW	16	2000	Green (RoHS & no Sb/Br)	CU NIPDAU	Level-1-260C-UNLIM	0 to 70	RU02EC	Samples
TRS202ECPWRG4	ACTIVE	TSSOP	PW	16	2000	Green (RoHS & no Sb/Br)	CU NIPDAU	Level-1-260C-UNLIM	0 to 70	RU02EC	Samples
TRS202EID	ACTIVE	SOIC	D	16	40	Green (RoHS & no Sb/Br)	CU NIPDAU	Level-1-260C-UNLIM	-40 to 85	TRS202EI	Samples
TRS202EIDR	ACTIVE	SOIC	D	16	2500	Green (RoHS & no Sb/Br)	CU NIPDAU	Level-1-260C-UNLIM	-40 to 85	TRS202EI	Samples
TRS202EIDW	ACTIVE	SOIC	DW	16	40	Green (RoHS & no Sb/Br)	CU NIPDAU	Level-1-260C-UNLIM	-40 to 85	TRS202EI	Samples
TRS202EIDWR	ACTIVE	SOIC	DW	16	2000	Green (RoHS & no Sb/Br)	CU NIPDAU	Level-1-260C-UNLIM	-40 to 85	TRS202EI	Samples
TRS202EIN	ACTIVE	PDIP	N	16	25	Pb-Free (RoHS)	CU NIPDAU	N / A for Pkg Type	-40 to 85	TRS202EIN	Samples
TRS202EINE4	ACTIVE	PDIP	N	16	25	Pb-Free (RoHS)	CU NIPDAU	N / A for Pkg Type	-40 to 85	TRS202EIN	Samples
TRS202EIPW	ACTIVE	TSSOP	PW	16	90	Green (RoHS & no Sb/Br)	CU NIPDAU	Level-1-260C-UNLIM	-40 to 85	RU02EI	Samples
TRS202EIPWG4	ACTIVE	TSSOP	PW	16	90	Green (RoHS & no Sb/Br)	CU NIPDAU	Level-1-260C-UNLIM	-40 to 85	RU02EI	Samples

Orderable Device	Status (1)	Package Type	Package Drawing	Pins	Package Qty	Eco Plan (2)	Lead/Ball Finish (6)	MSL Peak Temp (3)	Op Temp (°C)	Device Marking (4/5)	Samples
TRS202EIPWR	ACTIVE	TSSOP	PW	16	2000	Green (RoHS & no Sb/Br)	CU NIPDAU	Level-1-260C-UNLIM	-40 to 85	RU02EI	Samples
TRS202EIPWRG4	ACTIVE	TSSOP	PW	16	2000	Green (RoHS & no Sb/Br)	CU NIPDAU	Level-1-260C-UNLIM	-40 to 85	RU02EI	Samples

(1) The marketing status values are defined as follows:
ACTIVE: Product device recommended for new designs.
LIFEBUY: TI has announced that the device will be discontinued, and a lifetime-buy period is in effect.
NRND: Not recommended for new designs. Device is in production to support existing customers, but TI does not recommend using this part in a new design.
PREVIEW: Device has been announced but is not in production. Samples may or may not be available.
OBSOLETE: TI has discontinued the production of the device.

(2) Eco Plan - The planned eco-friendly classification: Pb-Free (RoHS), Pb-Free (RoHS Exempt), or Green (RoHS & no Sb/Br) - please check http://www.ti.com/productcontent for the latest availability information and additional product content details.
TBD: The Pb-Free/Green conversion plan has not been defined.
Pb-Free (RoHS): TI's terms "Lead-Free" or "Pb-Free" mean semiconductor products that are compatible with the current RoHS requirements for all 6 substances, including the requirement that lead not exceed 0.1% by weight in homogeneous materials. Where designed to be soldered at high temperatures, TI Pb-Free products are suitable for use in specified lead-free processes.
Pb-Free (RoHS Exempt): This component has a RoHS exemption for either 1) lead-based flip-chip solder bumps used between the die and package, or 2) lead-based die adhesive used between the die and leadframe. The component is otherwise considered Pb-Free (RoHS compatible) as defined above.
Green (RoHS & no Sb/Br): TI defines "Green" to mean Pb-Free (RoHS compatible), and free of Bromine (Br) and Antimony (Sb) based flame retardants (Br or Sb do not exceed 0.1% by weight in homogeneous material)

(3) MSL, Peak Temp. - The Moisture Sensitivity Level rating according to the JEDEC industry standard classifications, and peak solder temperature.

(4) There may be additional marking, which relates to the logo, the lot trace code information, or the environmental category on the device.

(5) Multiple Device Markings will be inside parentheses. Only one Device Marking contained in parentheses and separated by a "~" will appear on a device. If a line is indented then it is a continuation of the previous line and the two combined represent the entire Device Marking for that device.

(6) Lead/Ball Finish - Orderable Devices may have multiple material finish options. Finish options are separated by a vertical ruled line. Lead/Ball Finish values may wrap to two lines if the finish value exceeds the maximum column width.

Important Information and Disclaimer: The information provided on this page represents TI's knowledge and belief as of the date that it is provided. TI bases its knowledge and belief on information provided by third parties, and makes no representation or warranty as to the accuracy of such information. Efforts are underway to better integrate information from third parties. TI has taken and continues to take reasonable steps to provide representative and accurate information but may not have conducted destructive testing or chemical analysis on incoming materials and chemicals. TI and TI suppliers consider certain information to be proprietary, and thus CAS numbers and other limited information may not be available for release.

In no event shall TI's liability arising out of such information exceed the total purchase price of the TI part(s) at issue in this document sold by TI to Customer on an annual basis.

TAPE AND REEL INFORMATION

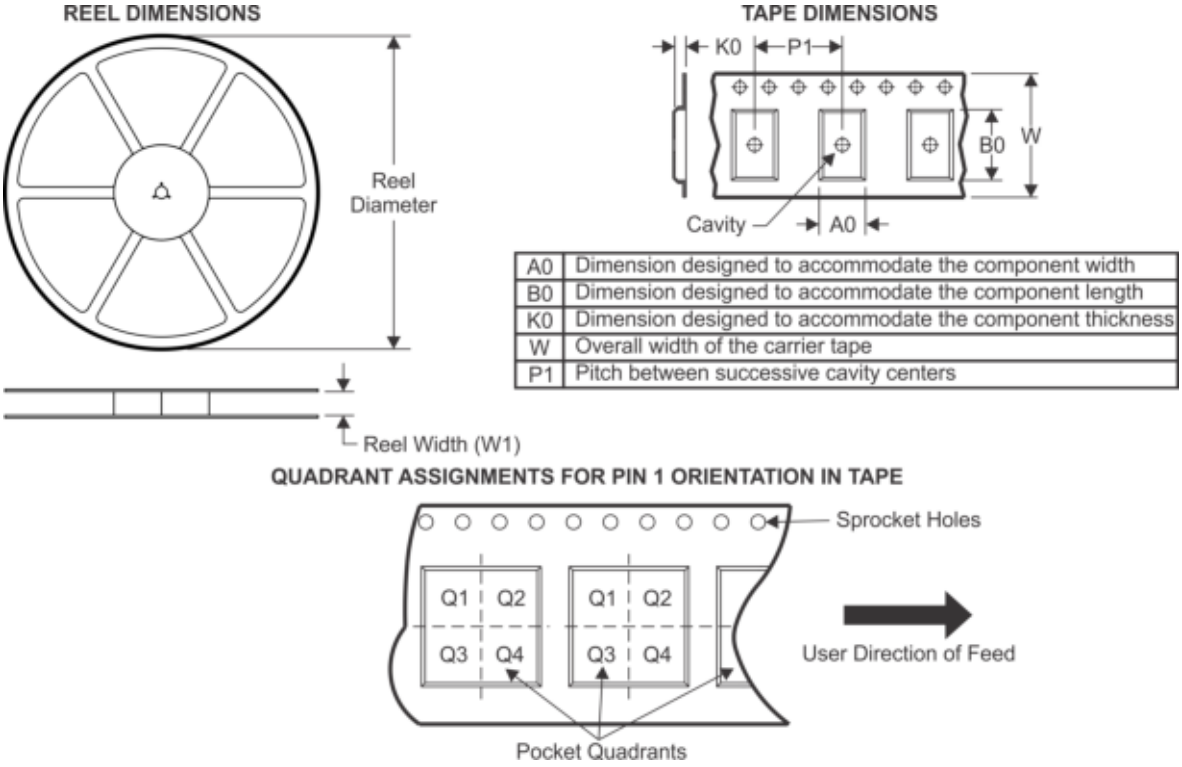

A0	Dimension designed to accommodate the component width
B0	Dimension designed to accommodate the component length
K0	Dimension designed to accommodate the component thickness
W	Overall width of the carrier tape
P1	Pitch between successive cavity centers

*All dimensions are nominal

Device	Package Type	Package Drawing	Pins	SPQ	Reel Diameter (mm)	Reel Width W1 (mm)	A0 (mm)	B0 (mm)	K0 (mm)	P1 (mm)	W (mm)	Pin1 Quadrant
TRS202ECDR	SOIC	D	16	2500	330.0	16.4	6.5	10.3	2.1	8.0	16.0	Q1
TRS202ECDWR	SOIC	DW	16	2000	330.0	16.4	10.75	10.7	2.7	12.0	16.0	Q1
TRS202ECPWR	TSSOP	PW	16	2000	330.0	12.4	6.9	5.6	1.6	8.0	12.0	Q1
TRS202EIDR	SOIC	D	16	2500	330.0	16.4	6.5	10.3	2.1	8.0	16.0	Q1
TRS202EIDWR	SOIC	DW	16	2000	330.0	16.4	10.75	10.7	2.7	12.0	16.0	Q1
TRS202EIPWR	TSSOP	PW	16	2000	330.0	12.4	6.9	5.6	1.6	8.0	12.0	Q1

TAPE AND REEL BOX DIMENSIONS

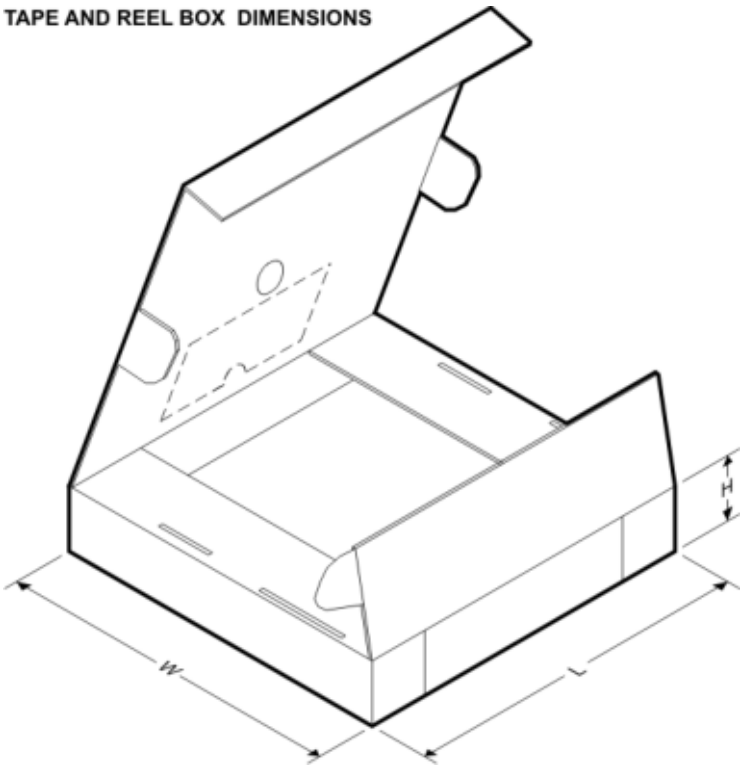

*All dimensions are nominal

Device	Package Type	Package Drawing	Pins	SPQ	Length (mm)	Width (mm)	Height (mm)
TRS202ECDR	SOIC	D	16	2500	367.0	367.0	38.0
TRS202ECDWR	SOIC	DW	16	2000	367.0	367.0	38.0
TRS202ECPWR	TSSOP	PW	16	2000	367.0	367.0	35.0
TRS202EIDR	SOIC	D	16	2500	367.0	367.0	38.0
TRS202EIDWR	SOIC	DW	16	2000	367.0	367.0	38.0
TRS202EIPWR	TSSOP	PW	16	2000	367.0	367.0	35.0

D (R–PDSO–G16) PLASTIC SMALL OUTLINE

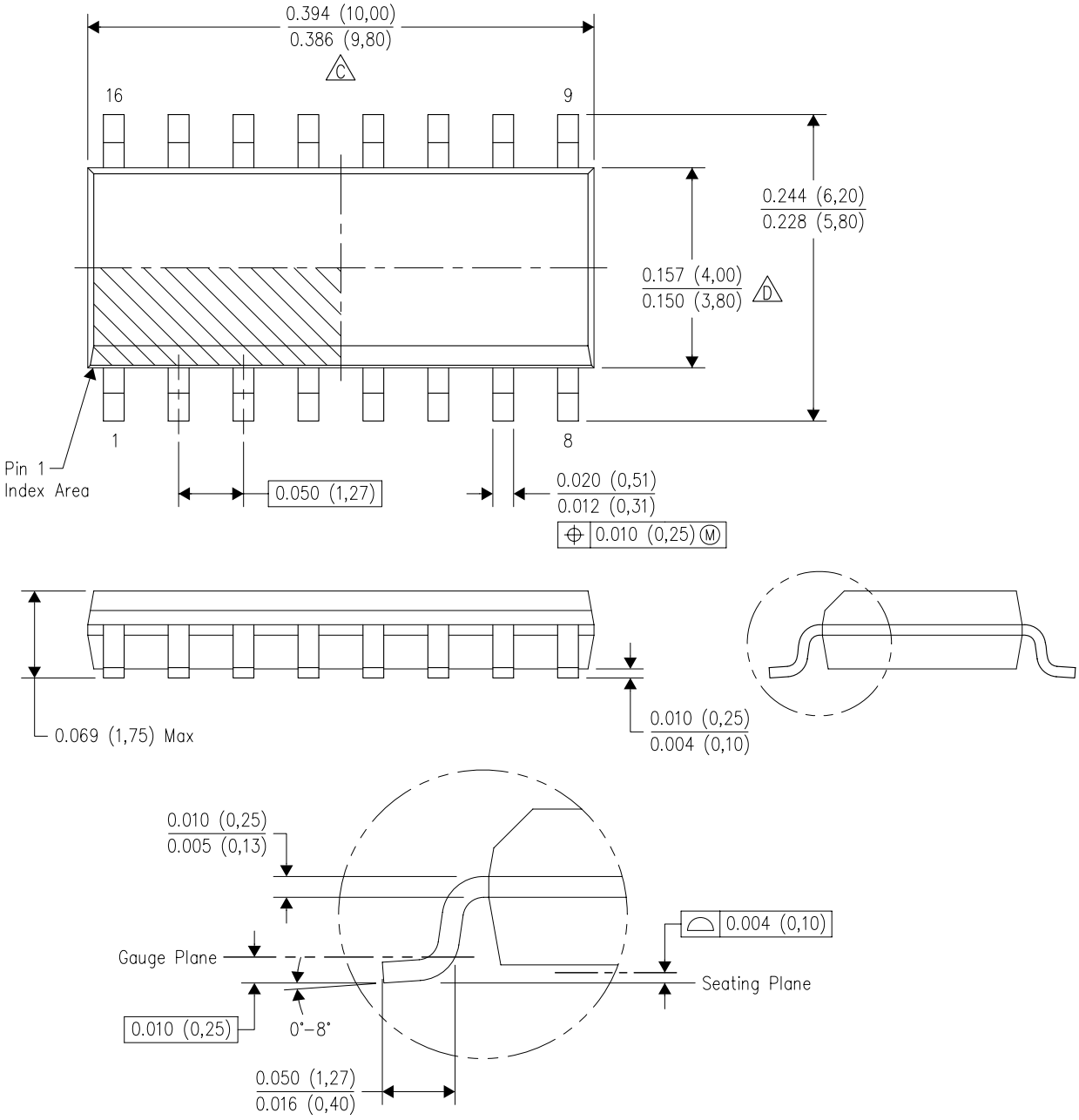

NOTES:
A. All linear dimensions are in inches (millimeters).
B. This drawing is subject to change without notice.
C. Body length does not include mold flash, protrusions, or gate burrs. Mold flash, protrusions, or gate burrs shall not exceed 0.006 (0,15) each side.
D. Body width does not include interlead flash. Interlead flash shall not exceed 0.017 (0,43) each side.
E. Reference JEDEC MS–012 variation AC.

D (R–PDSO–G16) PLASTIC SMALL OUTLINE

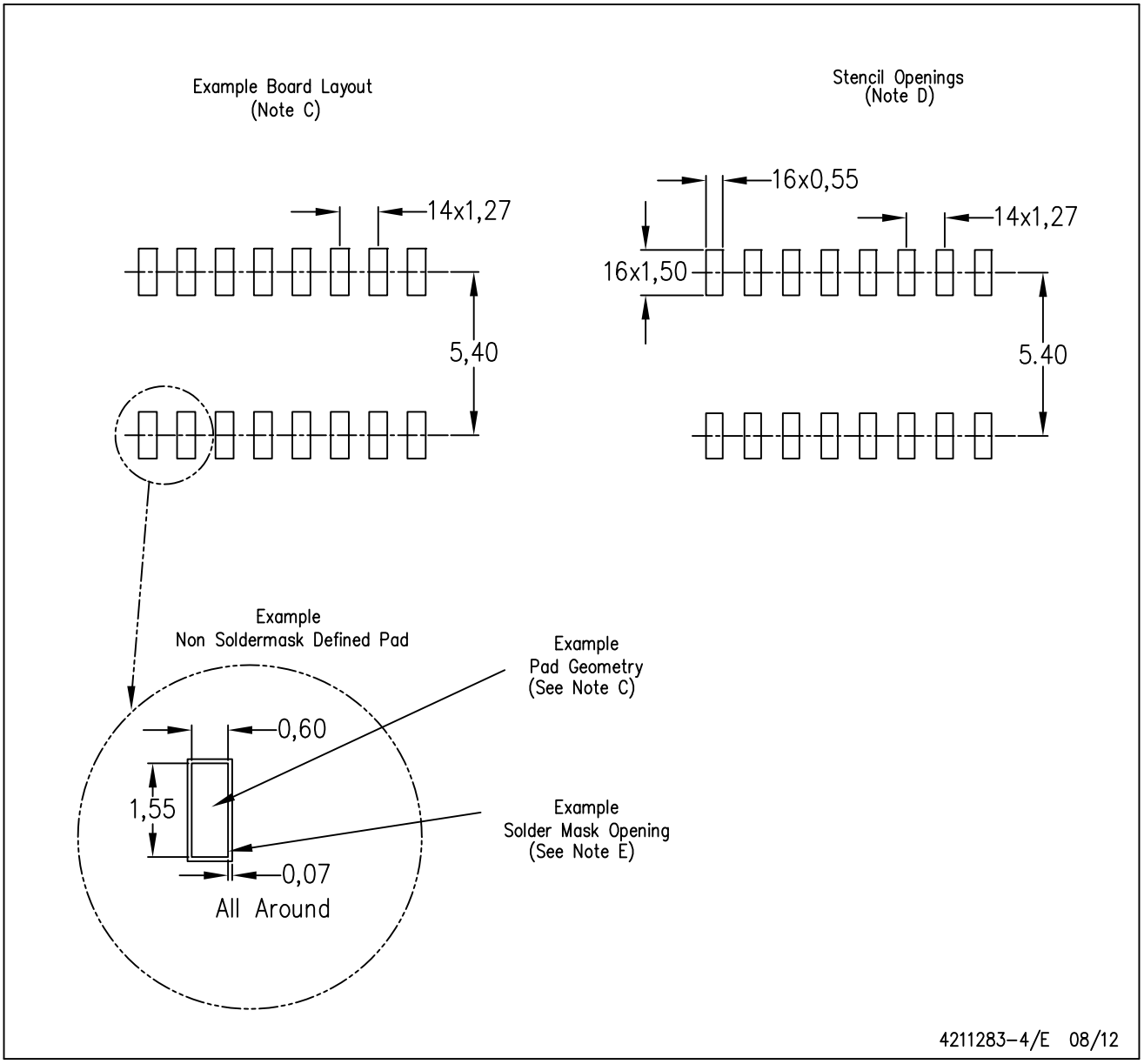

NOTES:
A. All linear dimensions are in millimeters.
B. This drawing is subject to change without notice.
C. Publication IPC–7351 is recommended for alternate designs.
D. Laser cutting apertures with trapezoidal walls and also rounding corners will offer better paste release. Customers should contact their board assembly site for stencil design recommendations. Refer to IPC–7525 for other stencil recommendations.
E. Customers should contact their board fabrication site for solder mask tolerances between and around signal pads.

DW (R–PDSO–G16) PLASTIC SMALL OUTLINE

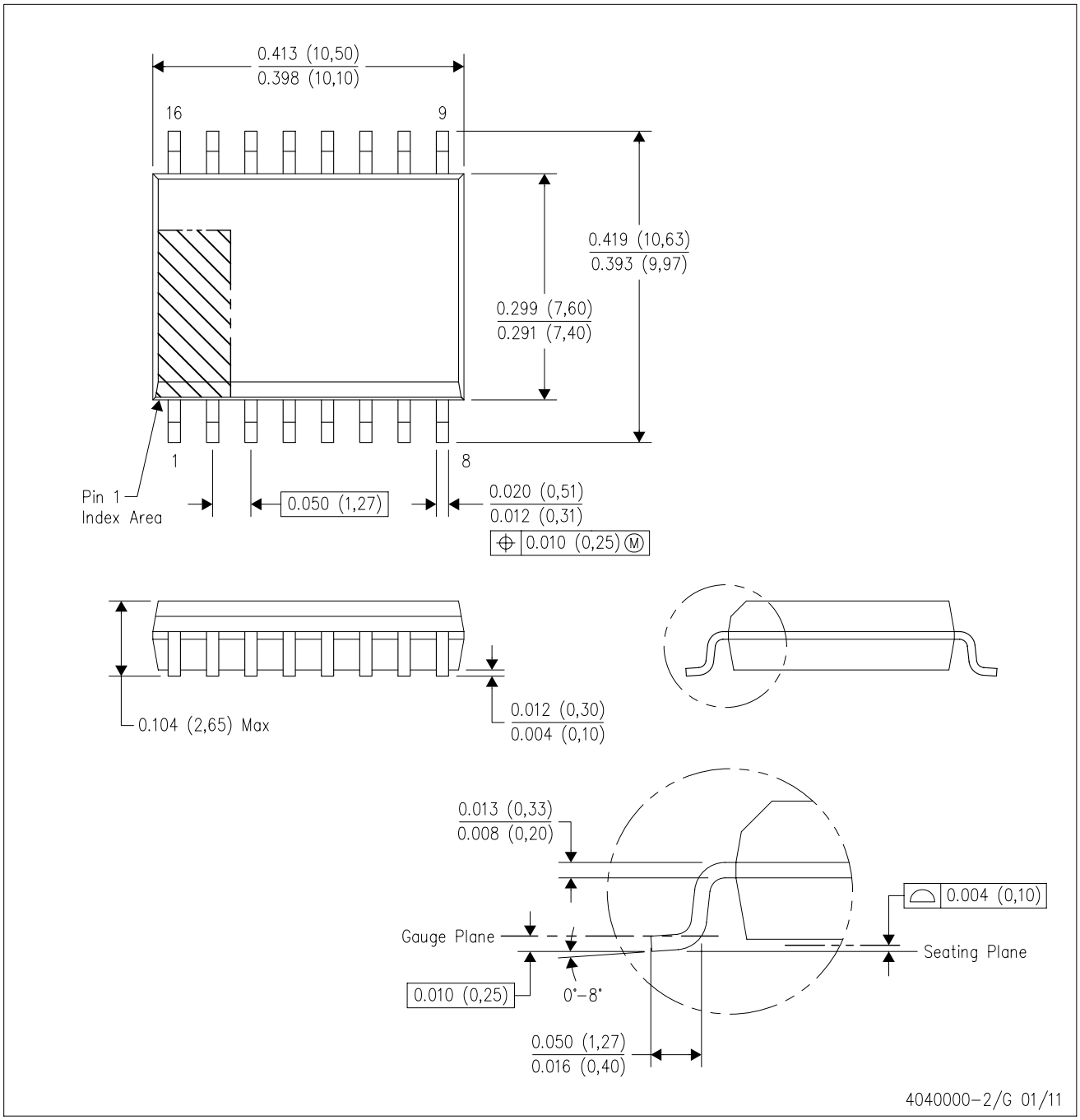

NOTES:
A. All linear dimensions are in inches (millimeters). Dimensioning and tolerancing per ASME Y14.5M–1994.
B. This drawing is subject to change without notice.
C. Body dimensions do not include mold flash or protrusion not to exceed 0.006 (0,15).
D. Falls within JEDEC MS–013 variation AA.

DW (R–PDSO–G16) PLASTIC SMALL OUTLINE

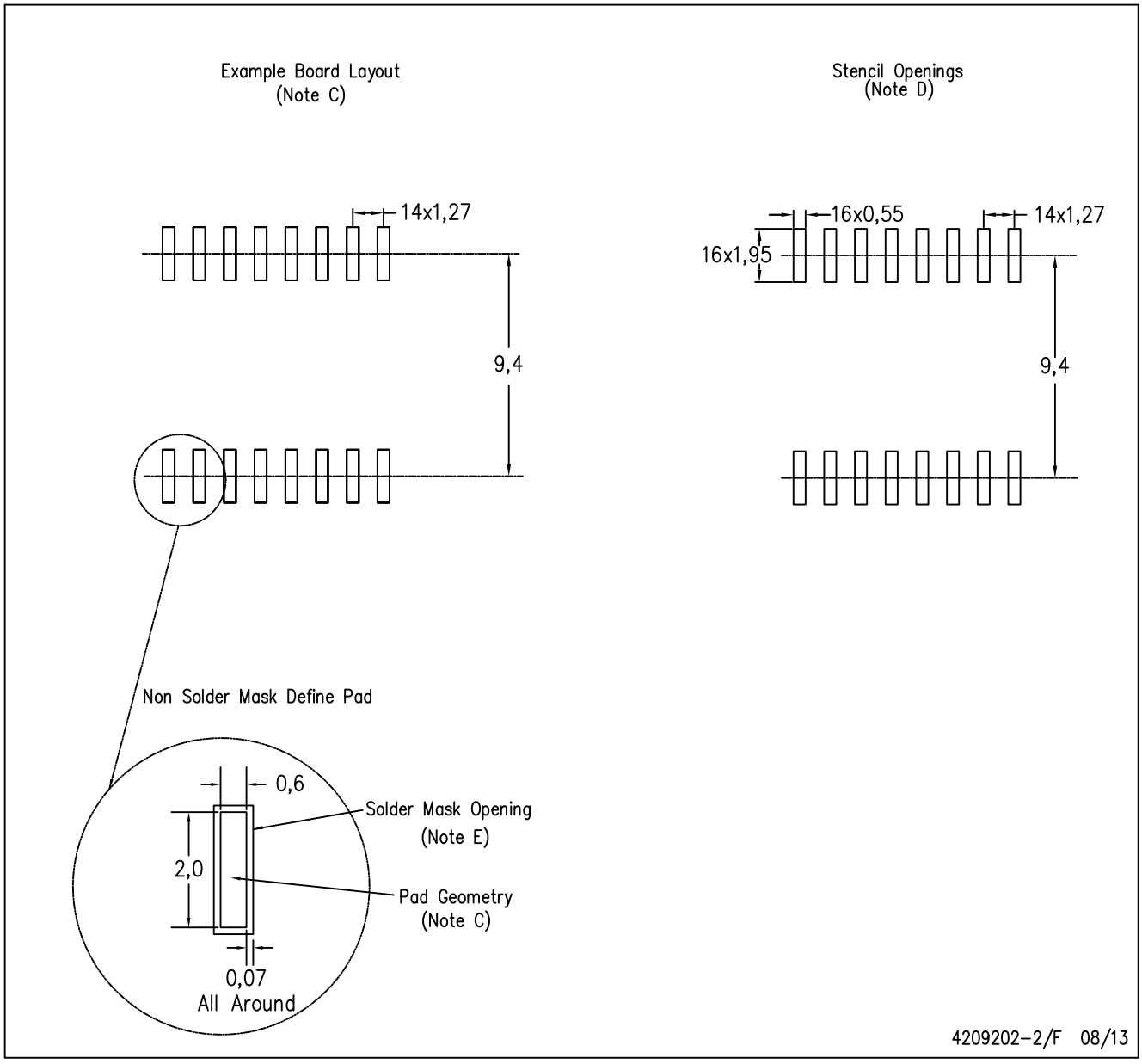

NOTES:
A. All linear dimensions are in millimeters.
B. This drawing is subject to change without notice.
C. Refer to IPC7351 for alternate board design.
D. Laser cutting apertures with trapezoidal walls and also rounding corners will offer better paste release. Customers should contact their board assembly site for stencil design recommendations. Refer to IPC–7525
E. Customers should contact their board fabrication site for solder mask tolerances between and around signal pads.

N (R–PDIP–T**)

PLASTIC DUAL–IN–LINE PACKAGE

16 PINS SHOWN

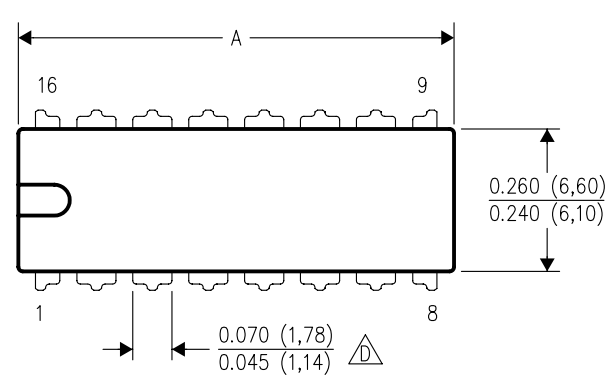

DIM \ PINS **	14	16	18	20
A MAX	0.775 (19,69)	0.775 (19,69)	0.920 (23,37)	1.060 (26,92)
A MIN	0.745 (18,92)	0.745 (18,92)	0.850 (21,59)	0.940 (23,88)
MS–001 VARIATION (C)	AA	BB	AC	AD

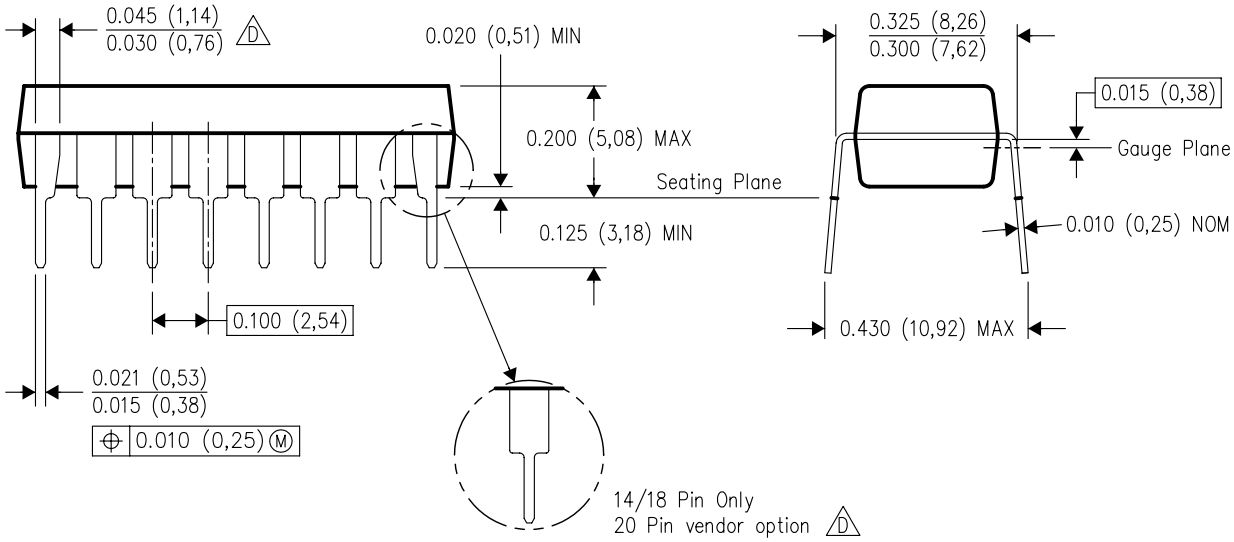

4040049/E 12/2002

NOTES:
A. All linear dimensions are in inches (millimeters).
B. This drawing is subject to change without notice.
C. Falls within JEDEC MS–001, except 18 and 20 pin minimum body length (Dim A).
D. The 20 pin end lead shoulder width is a vendor option, either half or full width.

PW (R–PDSO–G16) PLASTIC SMALL OUTLINE

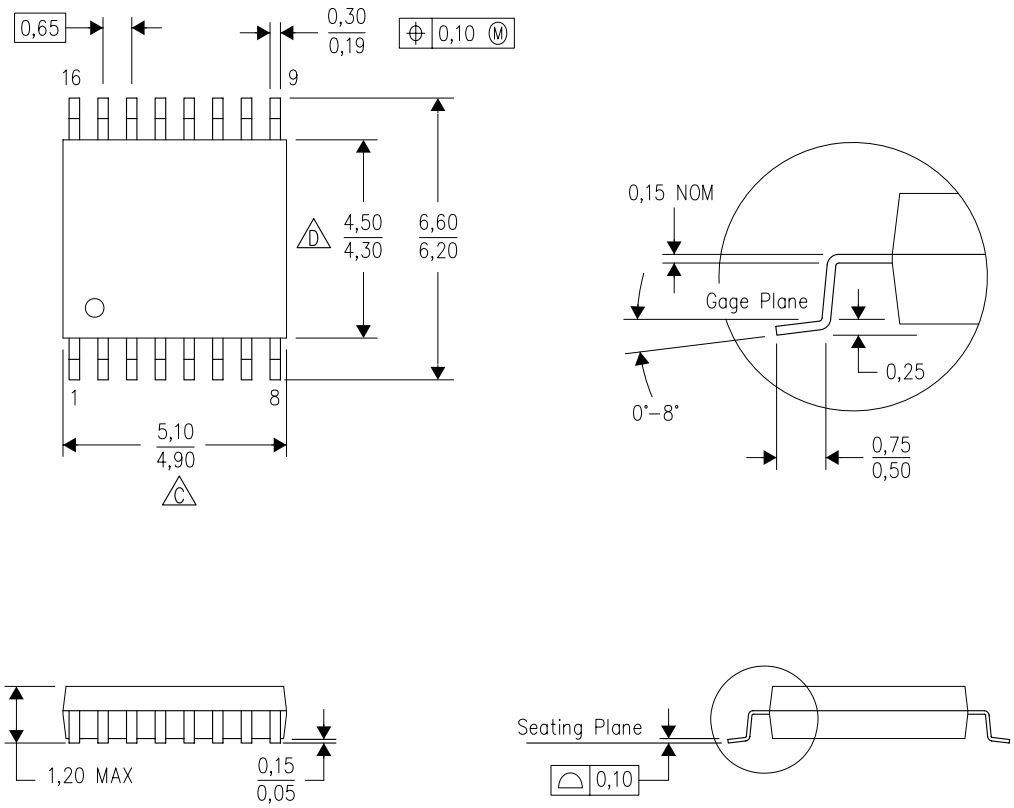

4040064–4/G 02/11

NOTES:
A. All linear dimensions are in millimeters. Dimensioning and tolerancing per ASME Y14.5M–1994.
B. This drawing is subject to change without notice.
C. Body length does not include mold flash, protrusions, or gate burrs. Mold flash, protrusions, or gate burrs shall not exceed 0,15 each side.
D. Body width does not include interlead flash. Interlead flash shall not exceed 0,25 each side.
E. Falls within JEDEC MO–153

PW (R–PDSO–G16) PLASTIC SMALL OUTLINE

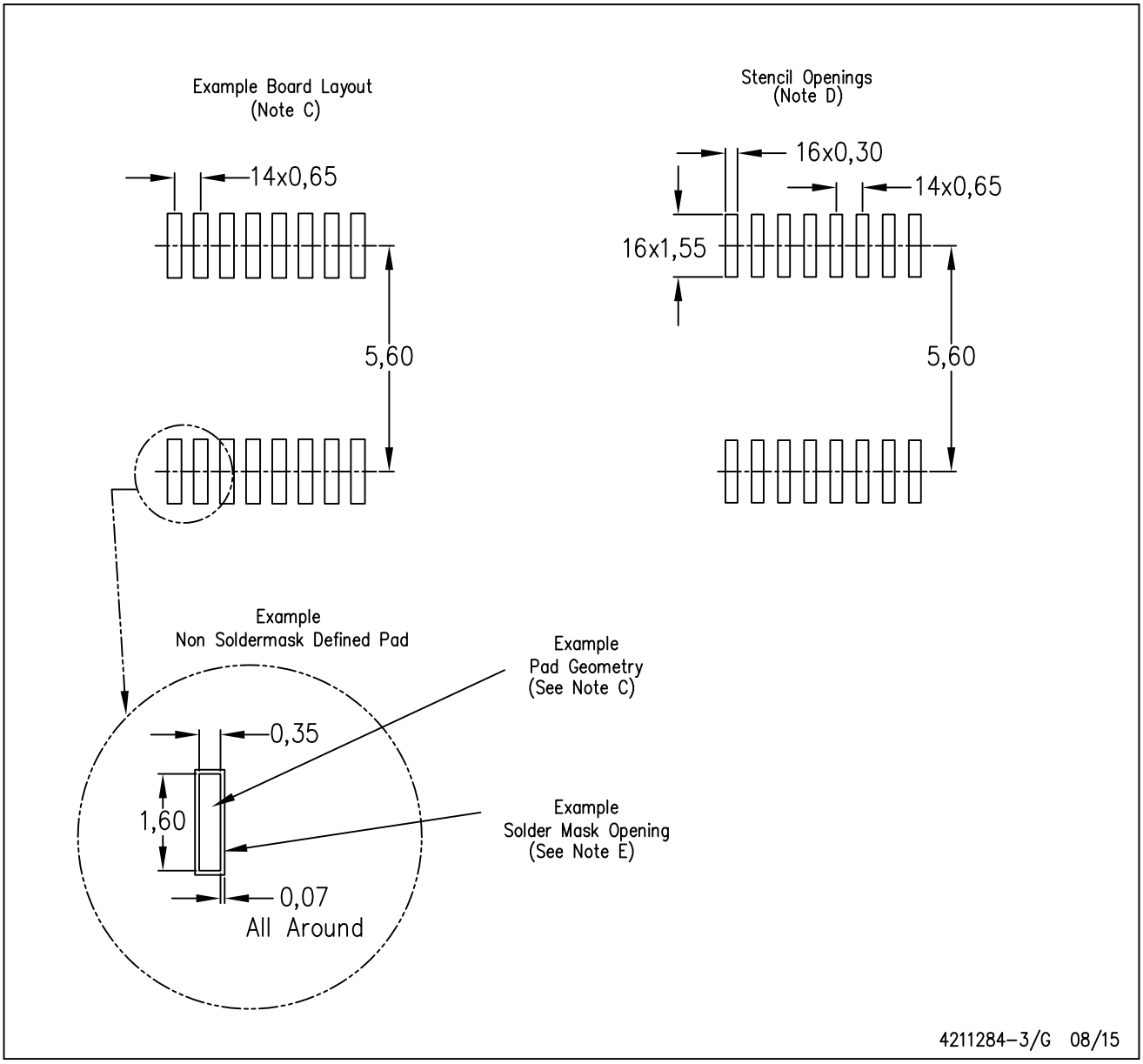

NOTES:
A. All linear dimensions are in millimeters.
B. This drawing is subject to change without notice.
C. Publication IPC–7351 is recommended for alternate designs.
D. Laser cutting apertures with trapezoidal walls and also rounding corners will offer better paste release. Customers should contact their board assembly site for stencil design recommendations. Refer to IPC–7525 for other stencil recommendations.
E. Customers should contact their board fabrication site for solder mask tolerances between and around signal pads.

IMPORTANT NOTICE

Texas Instruments Incorporated and its subsidiaries (TI) reserve the right to make corrections, enhancements, improvements and other changes to its semiconductor products and services per JESD46, latest issue, and to discontinue any product or service per JESD48, latest issue. Buyers should obtain the latest relevant information before placing orders and should verify that such information is current and complete. All semiconductor products (also referred to herein as “components”) are sold subject to TI’s terms and conditions of sale supplied at the time of order acknowledgment.

TI warrants performance of its components to the specifications applicable at the time of sale, in accordance with the warranty in TI’s terms and conditions of sale of semiconductor products. Testing and other quality control techniques are used to the extent TI deems necessary to support this warranty. Except where mandated by applicable law, testing of all parameters of each component is not necessarily performed.

TI assumes no liability for applications assistance or the design of Buyers’ products. Buyers are responsible for their products and applications using TI components. To minimize the risks associated with Buyers’ products and applications, Buyers should provide adequate design and operating safeguards.

TI does not warrant or represent that any license, either express or implied, is granted under any patent right, copyright, mask work right, or other intellectual property right relating to any combination, machine, or process in which TI components or services are used. Information published by TI regarding third-party products or services does not constitute a license to use such products or services or a warranty or endorsement thereof. Use of such information may require a license from a third party under the patents or other intellectual property of the third party, or a license from TI under the patents or other intellectual property of TI.

Reproduction of significant portions of TI information in TI data books or data sheets is permissible only if reproduction is without alteration and is accompanied by all associated warranties, conditions, limitations, and notices. TI is not responsible or liable for such altered documentation. Information of third parties may be subject to additional restrictions.

Resale of TI components or services with statements different from or beyond the parameters stated by TI for that component or service voids all express and any implied warranties for the associated TI component or service and is an unfair and deceptive business practice. TI is not responsible or liable for any such statements.

Buyer acknowledges and agrees that it is solely responsible for compliance with all legal, regulatory and safety-related requirements concerning its products, and any use of TI components in its applications, notwithstanding any applications-related information or support that may be provided by TI. Buyer represents and agrees that it has all the necessary expertise to create and implement safeguards which anticipate dangerous consequences of failures, monitor failures and their consequences, lessen the likelihood of failures that might cause harm and take appropriate remedial actions. Buyer will fully indemnify TI and its representatives against any damages arising out of the use of any TI components in safety-critical applications.

In some cases, TI components may be promoted specifically to facilitate safety-related applications. With such components, TI’s goal is to help enable customers to design and create their own end-product solutions that meet applicable functional safety standards and requirements. Nonetheless, such components are subject to these terms.

No TI components are authorized for use in FDA Class III (or similar life-critical medical equipment) unless authorized officers of the parties have executed a special agreement specifically governing such use.

Only those TI components which TI has specifically designated as military grade or “enhanced plastic” are designed and intended for use in military/aerospace applications or environments. Buyer acknowledges and agrees that any military or aerospace use of TI components which have ***not*** been so designated is solely at the Buyer's risk, and that Buyer is solely responsible for compliance with all legal and regulatory requirements in connection with such use.

TI has specifically designated certain components as meeting ISO/TS16949 requirements, mainly for automotive use. In any case of use of non-designated products, TI will not be responsible for any failure to meet ISO/TS16949.

Products		**Applications**	
Audio	www.ti.com/audio	Automotive and Transportation	www.ti.com/automotive
Amplifiers	amplifier.ti.com	Communications and Telecom	www.ti.com/communications
Data Converters	dataconverter.ti.com	Computers and Peripherals	www.ti.com/computers
DLP® Products	www.dlp.com	Consumer Electronics	www.ti.com/consumer-apps
DSP	dsp.ti.com	Energy and Lighting	www.ti.com/energy
Clocks and Timers	www.ti.com/clocks	Industrial	www.ti.com/industrial
Interface	interface.ti.com	Medical	www.ti.com/medical
Logic	logic.ti.com	Security	www.ti.com/security
Power Mgmt	power.ti.com	Space, Avionics and Defense	www.ti.com/space-avionics-defense
Microcontrollers	microcontroller.ti.com	Video and Imaging	www.ti.com/video
RFID	www.ti-rfid.com		
OMAP Applications Processors	www.ti.com/omap	**TI E2E Community**	e2e.ti.com
Wireless Connectivity	www.ti.com/wirelessconnectivity		

Mailing Address: Texas Instruments, Post Office Box 655303, Dallas, Texas 75265
Copyright © 2016, Texas Instruments Incorporated