When precision matters...

A Tallysman *Accutenna*®
TW7972 Triple Band GNSS Antenna + L-band Correction Services

The TW7972 is precision tuned triple band, *Accutenna*® technology antenna for reception of GPS L1/L2/L5, GLONASS G1/G2/G3, BeiDou B1/B2, Galileo E1/E5a+b plus L-band corrections signals. The TW7972 provides superior multi-path rejection and axial ratio, a linear phase response, and tight Phase Centre Variation (PCV), while protecting against intermodulation and saturation caused by high level cellular 700MHz signals. This antenna is ideal for precision agriculture, autonomous vehicle tracking and guidance, and other applications where precision matters.

Architecturally, the TW7972 features a dual feed circular stacked patch element. The signals from the two orthogonal feeds are summed in quadrature, pre-filtered in a low loss filter to protect against a wide range of potentially interfering signals, amplified in high linearity, wide-band LNA, then band-split, tightly filtered and amplified prior to signal recombination at the output.

The TW7972 provides reception for signals in the bands 1164MHz to 1254MHz and 1525MHz to 1606MHz. It is housed in a magnetic mount, weather-proof enclosure.

This product is also available in an OEM format (TW3967 for 28dB and TW3972E for 35dB)

TW7972 Dimensions (mm)

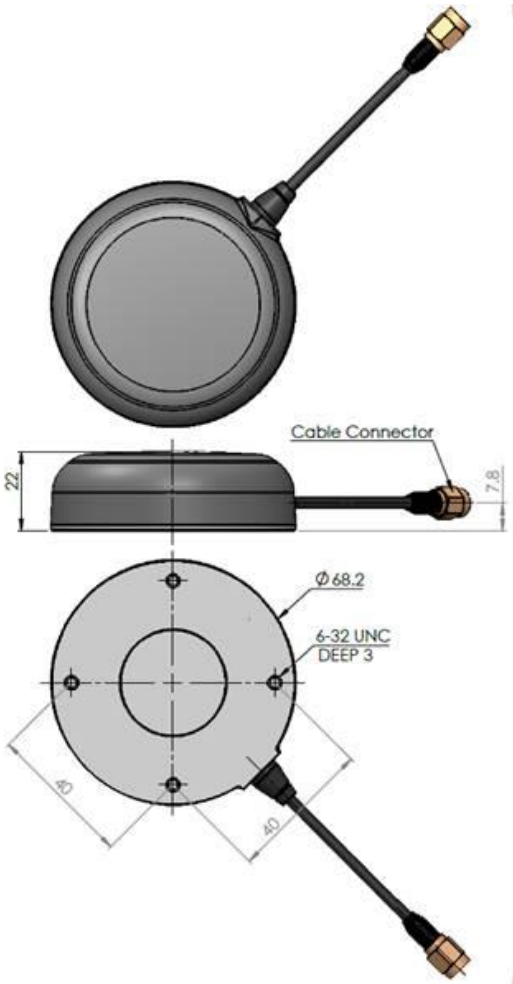

Applications

- Precision GPS position
- Triple Frequency RTK systems (base and rovers)
- Positive Train Control (PTC) systems
- Military & Security

Features

- Very low Noise, Pre-filtered Preamp, 2.5dB
- Axial ratio: <2dB typ.
- Tight Phase Center Variation
- LNA Gain 32 dB typ.
- Low current: 24mA typ.
- ESD circuit protection: 15 KV
- Invariant performance from: +2.5 to 16VDC

Benefits

- Ideal for triple band RTK systems
- Great multipath rejection
- Increased system accuracy
- Great signal to noise ratio
- IP69K, REACH, and RoHS compliant

TW7972 Triple Band GNSS Antenna + L-band Correction Services

Specifications (Measured a Vcc = 3V, and Temperature=25°C)

Antenna

Patch Architecture			Circular, Dual Feed, Dual Stacked Patch	
E5a/L5 Gain (100mm ground plane)			-1.5dBic Min at Zenith	
E5b/G3 Gain (100mm ground plane)			2.5 dBic Min at Zenith	
L2 Gain (100mm ground plane)			4.0 dBic Min at Zenith	
G2 Gain (100mm ground plane)			2.5 dBic Min at Zenith	
E1 Gain (100mm ground plane)			4.0 dBic Min at Zenith	
L1 Gain (100mm ground plane)			4.0 dBic Min at Zenith	
G1 Gain (100mm ground plane)			3.0 dBic Min at Zenith	
Typical Axial Ratio @ zenith				
L5/E5ab	<2dB		L2/B2	<1.5dB
G2	<2dB		L-Band	<1dB
L1/E1	<1dB		G1	<1.5dB

Electrical

Bandwidth	L2/L5: 1164MHz-1254MHz (Filter bandwidth) L-band/L1: 1525 MHz-1606MHz (Filter bandwidth)			
Overall LNA Gain	32dB typ,			
Gain Variation with Temperature.	3dB max over operational temperature range			
LNA Noise Figure	2.5dB typ at 25°C			
VSWR (at LNA output)	<1.5:1 typ. 1.8:1 max.			
Supply Voltage Range	+2.5 to 16VDC nominal, up to 50mV p-p ripple			
EMI Immunity	50V/Meter, excepting L1+/-100MHz and L2 +/- 100MHz			
Supply Current	24mA typ. at 25°C, 25mA max at 75°C.			
ESD Circuit protection	15 KV air discharge.			
Polarization	RHCP			
Out-of-Band Rejection	**L5/E5/L2/G2**		**L1/E1/B1/G1**	
	<1050 MHz	>45 dB	<1450 MHz	>30dB
	<1125 MHz	>30 dB	>1690 MHz	> 30dB
	>1350 MHz	>35 dB	>1730 MHz	> 40dB

Mechanicals & Environmental

Mechanical Size, Ground Plane	69mm (dia) x 22mm (H)
Operating Temperature Range	-40°C to +85°C
Enclosure	Radome: EXL9330, Base: Zamak White Metal
Weight	180 g
Attachment Method	Magnetic Mount. Four-threaded holes (#6x32, 4mm deep in the base allow for screw mounting.
Environmental	IP69K, RoHS, RED, and REACH compliant
Shock	Vertical axis: 50 G, other axes: 30 G
Vibration	MIL STD 810D

Ordering Information

TW7972 – Triple Band GNSS antenna with L-Band Correction 33-7972-xx-yyyy
Where xx = connector type and yyyy = cable length in mm (where applicable)

Please refer to the Ordering Guide (http://www.tallysman.com/index.php/gnss/ordering-guide/) for the current and complete list of available connectors.

36 Steacie Drive Ottawa ON K2K 2A9 Canada
Tel +1 613 591 3131 Fax 613 591 3121 sales@tallysman.com
The information provided herein is intended as a guide only and is subject to change without notice. This document is not to be regarded as a guarantee of performance. Tallysman Wireless Inc. hereby disclaims any or all warranties and liabilities of any kind. © 2015 Tallysman Wireless Inc. All rights reserved. v1.9