VSP6037L

TALLYSMAN®
A CALIAN® COMPANY
When precision matters.®

VSP6037L VeroStar™ Full GNSS Precision Antenna + L-band

Frequency Coverage: GPS/QZSS-L1/L2/L5, QZSS-L6, GLONASS-G1/G2/G3, Galileo-E1/E5a/E5b/E6, BeiDou-B1/B2/B2a/B3, NavIC-L5 + L-band correction services

The patent-pending VSP6037L antenna employs Tallysman's unique VeroStar™ technology, providing high gain over the full GNSS spectrum: GPS/QZSS-L1/L2/L5, QZSS-L6, GLONASS-G1/G2/G3, Galileo-E1/E5a/E5b/E6, BeiDou-B1/B2/B2a/B3, and NavIC-L5, including the satellite-based augmentation system (SBAS) available in the region of operation [WAAS (North America), EGNOS (Europe), MSAS (Japan), or GAGAN (India)], as well as L-band correction services.

The light and compact embedded VeroStar™ VSP6037L is designed and crafted for high-accuracy positioning while being robust and reliable.

With an exceptionally low roll-off from zenith to the horizon, the VeroStar™ antenna provides the best-in-class tracking of GNSS and L-band correction signals from low elevation angles. In addition, the optimized axial ratio at all elevation angles results in excellent multipath rejection, thus enabling accurate and precise code and phase tracking of GNSS and L-band correction signals.

A wide-band spherical antenna element enables the VeroStar™ to deliver a ±2 mm phase centre variation (PCV), making it ideal for high-precision applications, such as autonomous vehicle navigation (land, sea, and air), smart survey devices, and maritime positioning.

The VeroStar™ antenna features a robust pre-filter and high-IP3 LNA architecture, minimizing de-sensing from high-level out-of-band signals, including 700 MHz LTE, while still providing a noise figure of only 1.8 dB.

The housed antenna, featuring an integrated rubber bumper to absorb routine impacts, has passed a battery of tests (water pressure, altitude, salt fog, shock, drop, and vibration) to ensure it can survive the rigours of day-to-day field use.

The unique features of the VeroStar™ antenna guarantee it can deliver high signal-to-noise ratio (SNR) and highly accurate and precise code and phase tracking of GNSS signals from all elevation angles in the most challenging environments.



Applications

- High-precision GNSS systems
- All embedded precision applications, such as:
  - Autonomous vehicle navigation (land, sea, air)
  - Deformation monitoring stations
  - Land survey rover
  - Marine navigation
  - RTK/PPP systems
  - Reference networks

Features

- Tight phase centre ariation (± 2 mm typ.)
- Low axial ratios from zenith to horizon
- Low roll-off from zenith to the horizon
- Superior low-elevation L-band correction reception
- High G/T at low elevation angles
- Invariant performance from 3.0 to 16 VDC
- Low current (50 mA)
- Low noise figure (1.8 dB)
- Light, compact, and robust design
- IP69K, REACH, and RoHS compliant

Benefits

- Consistent performance across all frequency bands
- Excellent GNSS tracking from low elevation angles
- Extreme accuracy and precision
- Excellent multipath rejection

About Tallysman: With global headquarters and manufacturing in Ottawa, Canada, Tallysman is a leading manufacturer of high-precision antennas and components for Global Navigation Satellite System (GNSS) applications. Tallysman's mission is to support the needs of a new generation of positioning systems by delivering unprecedented antenna precision at competitive prices. Learn more at **www.tallysman.com**

Revision: 1.0

Contact us:
info@tallysman.com
T: +1 613 591-3131

VSP6037L VeroStar™ Full GNSS Precision Antenna + L-band

Frequency Coverage: GPS/QZSS-L1/L2/L5, QZSS-L6, GLONASS-G1/G2/G3, Galileo-E1/E5a/E5b/E6, BeiDou-B1/B2/B2a/B3, NavIC-L5 + L-band correction services

Antenna

Technology Full GNSS frequency crossed dipoles

		Gain	Axial Ratio
		dBic typ. at Zenith	dB at Zenith
GNSS			
GPS / QZSS	L1	4.0	< 1.0
	L2	4.5	< 1.0
	L5	4.0	< 1.0
GLONASS	G1	4.0	< 1.0
	G2	4.5	< 1.0
	G3	4.5	< 1.0
Galileo	E1	4.0	< 1.0
	E5a	4.0	< 1.0
	E5b	4.5	< 1.0
	E6	4.0	< 1.0
BeiDou	B1	4.0	< 1.0
	B2	4.5	< 1.0
	B2a	4.0	< 1.0
	B3	4.0	< 1.0
IRNSS / NavIC	L5	4.0	< 1.0
QZSS	L6	4.0	< 1.0
L-band correction services		4.0	< 1.0
Satellite Communications			
Iridium		-	-
Globalstar		-	-

Other			
Axial Ratio at 10°	5.0 dB max.	Efficiency	> 70%
Phase Centre Variation	± 2 mm typ. (no azi.)	G/T @10°C (L-band c.s.)	≥ -25.4 dB/K

Mechanicals

Mechanical Size	170 mm (dia.) x 74.9 mm (h.)
Weight	500 g
Available Connectors	TNC (female)
Radome / Enclosure	EXL9330 plastic
Mount	5/8"-11 TPI or 1"-14 TPI

Environmental

Operating Temperature	-45 °C to +85 °C
Storage Temperature	-55 °C to +95 °C
Mechanical Vibration	MIL-STD-810E - Test method 514.5
Shock and Drop	MIL-STD-810G - Test method 516.6
Salt Fog	MIL-STD-810G - Test method 509.6
Low Pressure - Altitude	MIL-STD-810F - Test method 500.5
IP Rating (housing)	IP69K
Compliance	IPC-A-610, FCC Part 15, RED / CE Mark, RoHS, REACH

Warranty:

Parts and Labour	3-year standard warranty

Low Noise Amplifier (LNA) - Measured at 3.0 VDC and 25°C

Frequency Bandwith		Out-of-Band Rejection
Lower Band	1160 - 1300 MHz	≥ 70 dB @ ≤ 500 MHz ≥ 45 dB @ ≤ 900 MHz ≥ 44 dB @ ≤ 1064 MHz ≥ 30 dB @ ≤ 1080 MHz ≥ 24 dB @ ≤ 1370 MHz ≥ 45 dB @ ≥ 1410 MHz ≥ 60 dB @ ≥ 1430 MHz
L-band corrections services	1539 - 1559 MHz	≥ 80 dB @ ≤ 1450 MHz ≥ 50 dB @ ≤ 1480 MHz ≥ 35 dB @ ≤ 1500 MHz ≥ 60 dB @ ≥ 1650 MHz ≥ 75 dB @ ≥ 1700 MHz
Upper Band	1559 - 1606 MHz	

Architecture	Pre-filter → LNA stage 1 → filter → LNA stage 2
Gain	37 dB min.
Noise Figure	1.8 dB typ. @ 25 °C
VSWR	< 1.5:1 typ. | 1.8:1 max.
Supply Voltage Range	3.0 to 16 VDC nominal
Supply Current	50 mA typ.
ESD Circuit Protection	15 kV air discharge
P 1dB Output	+ 6.0 dBm
Group Delay Variation	< 10 ns

Mechanical Diagram

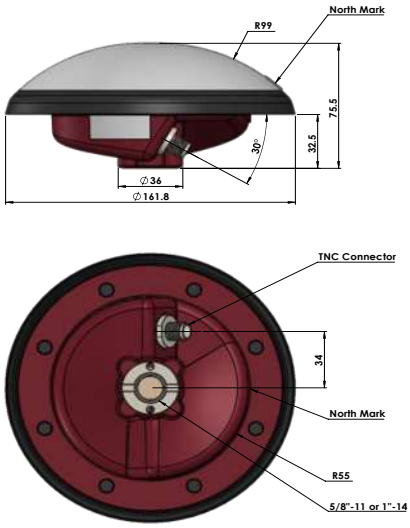

Ordering Information

Part Number **33-VSP6037L-zz**

where zz = mounting type: 58 = 5/8"-11 TPI | 01 = 1"-14 TPI

Please refer to our **Ordering Guide** to review available radomes and connectors at:
https://www.tallysman.com/resource/tallysman-ordering-guide/

© 2019 Tallysman Inc. All rights reserved. Tallysman, the "When Precision Matters" tag line and the Tallysman logo are trademarks or registered trademarks of Tallysman Inc. and/or its affiliates in Canada and certain other countries. All other trademarks mentioned in this document are the property of their respective owners. The information presented is subject to change without notice. Tallysman assumes no responsibility for any errors or omissions in this document. Tallysman Wireless Inc. hereby disclaims any or all warranties and liabilities of any kind.