UNITRODE

Stepper Motor Drive Circuit

FEATURES

- Full-Step, Half-Step and Micro-Step Capability
- Bipolar Output Current up to 1A
- Wide Range of Motor Supply Voltage 10-46V
- Low Saturation Voltage with Integrated Bootstrap
- Built-In Fast Recovery Commutating Diodes
- Current Levels Selected in Steps or Varied Continuously
- Thermal Protection with Soft Intervention

DESCRIPTION

The UC3717A is an improved version of the UC3717, used to switch drive the current in one winding of a bipolar stepper motor. The UC3717A has been modified to supply higher winding current, more reliable thermal protection, and improved efficiency by providing integrated bootstrap circuitry to lower recirculation saturation voltages. The diagram shown below presents the building blocks of the UC3717A. Included are an LS-TTL compatible logic input, a current sensor, a monostable, a thermal shutdown network, and an H-bridge output stage. The output stage features built-in fast recovery commutating diodes and integrated bootstrap pull up. Two UC3717As and a few external components form a complete control and drive unit for LS-TTL or micro-processor controlled stepper motor systems.

The UC3717A is characterized for operation over the temperature range of 0°C to +70°C.

ABSOLUTE MAXIMUM RATINGS (Note 1)

Voltage
- Logic Supply, V_{CC} 7V
- Output Supply, V_m 50V

Input Voltage
- Logic Inputs (Pins 7, 8, 9) 6V
- Analog Input (Pin 10) . . . . . V_{CC}
- Reference Input (Pin 11) 15V

Input Current
- Logic Inputs (Pins 7, 8, 9) . . . . . -10mA
- Analog Inputs (Pins 10, 11) . . . . . -10mA

Output Current (Pins 1, 15) . . . . . ±1.2A
Junction Temperature, T_J . . . . . +150°C
Storage Temperature Range, T_S . . . . . -55°C to +150°C

Note 1: All voltages are with respect to ground, Pins 4, 5, 12, 13. Currents are positive into, negative out of the specified terminal. Pin numbers refer to DIL-16 package.
Consult Packaging Section of Databook for thermal limitations and considerations of package.

BLOCK DIAGRAM

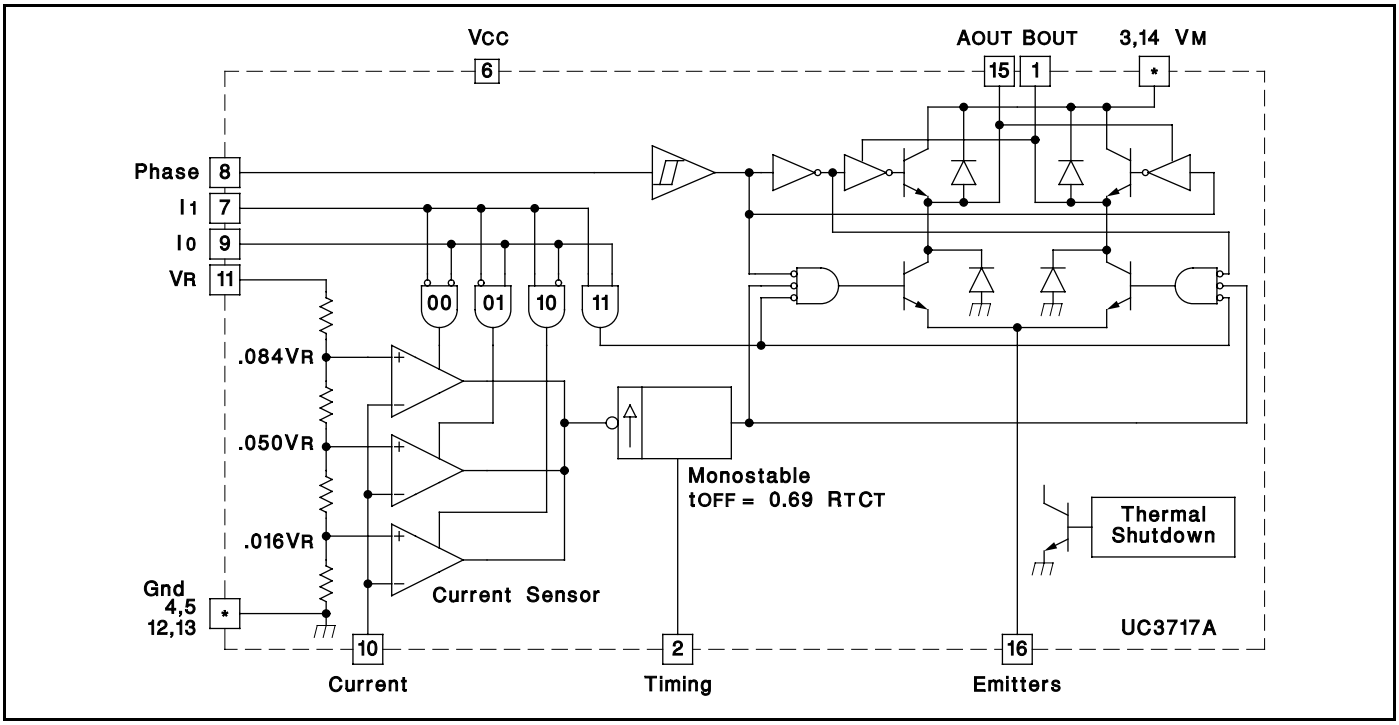

CONNECTION DIAGRAMS

DIL-16 (TOP VIEW)
J or N Package

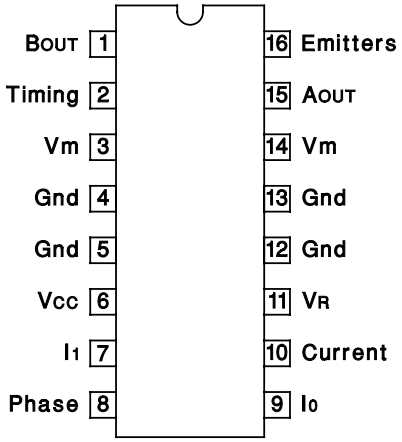

PLCC-20 (TOP VIEW)
Q Package

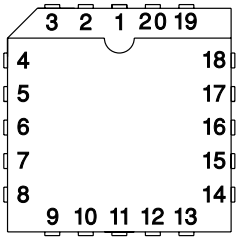

PACKAGE PIN FUNCTION	
FUNCTION	**PIN**
N/C	1
BOUT	2
Timing	3
Vm	4
Gnd	5
N/C	6
Gnd	7
VCC	8
I1	9
Phase	10
N/C	11
I0	12
Current	13
VR	14
Gnd	15
N/C	16
Gnd	17
Vm	18
AOUT	19
Emitters	20

ELECTRICAL CHARACTERISTICS

(Refer to the test circuit, Figure 6. V_m = 36V, V_{CC} = 5V, V_R = 5V, T_A = 0°C to 70°C, unless otherwise stated, $T_A = T_J$.)

PARAMETERS	TEST CONDITIONS	MIN	TYP	MAX	UNITS
Supply Voltage, V_m (Pins 3, 14)		10		46	V
Logic Supply Voltage, V_{CC} (Pin 6)		4.75		5.25	V
Logic Supply Current, I_{CC} (Pin 6)	$I_O = I_1 = 0$		7	15	mA
Thermal Shutdown Temperature		+160		+180	°C
Logic Inputs					
Input Low Voltage, (Pins 7, 8, 9)				0.8	V
Input High Voltage, (Pins 7, 8, 9)		2		V_{CC}	V
Low Voltage Input Current, (Pins 7, 8, 9)	V_I = 0.4V, Pin 8			-100	µA
	V_I = 0.4V, Pins 7 and 9			-400	mA
High Voltage Input Current, (Pins 7, 8, 9)	V_I = 2.4V			10	µA
Comparators					
Comparator Low, Threshold Voltage (Pin 10)	V_R = 5V; I_O = L; I_1 = H	66	80	90	mV
Comparator Medium, Threshold Voltage (Pin 10)	V_R = 5V; I_O = H; I_1 = L	236	250	266	mV
Comparator High, Threshold Voltage (Pin 10)	V_R = 5V; I_O = L; I_1 = L	396	420	436	mV
Comparator Input, Current (Pin 10)				±20	µA
Cutoff Time, t_{OFF}	R_T = 56kΩ, C_T = 820pF	25		35	µs
Turn Off Delay, t_D	(See Figure 5)			2	µs
Source Diode-Transistor Pair					
Saturation Voltage, V_{SAT} (Pins 1, 15)	I_m = -0.5A, Conduction Period		1.7	2.1	V
(See Figure 5)	I_m = -0.5A, Recirculation Period		1.1	1.35	V
Saturation Voltage, V_{SAT} (Pins 1, 15)	I_m = -1A, Conduction Period		2.1	2.8	V
(See Figure 5)	I_m = -1A, Recirculation Period		1.7	2.5	V
Leakage Current	V_m = 40V			300	µA
Diode Forward Voltage, V_F	I_m = -0.5A		1	1.25	V
	I_m = -1A		1.3	1.7	V

ELECTRICAL CHARACTERISTICS (cont.) (Refer to the test circuit, Figure 6. V_M = 36V, V_{CC} = 5V, V_R = 5V, T_A = 0°C to 70°C, unless otherwise stated, T_A = T_J.)

PARAMETERS	TEST CONDITIONS	MIN	TYP	MAX	UNITS
Sink Diode-Transistor Pair					
Saturation Voltage, V_{SAT} (Pins 1, 15)	I_m = 0.5A	0.8	1.1	1.35	V
	I_m = 1A		1.6	2.3	V
Leakage Current	V_m = 40V			300	µA
Diode Forward Voltage, V_F	I_m = 0.5A		1.1	1.5	V
	I_m = 1A		1.4	2	V

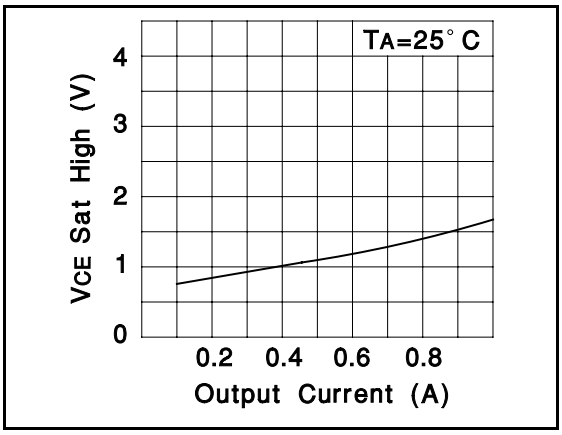

Figure 1. Typical Source Saturation Voltage vs Output Current (Recirculation Period)

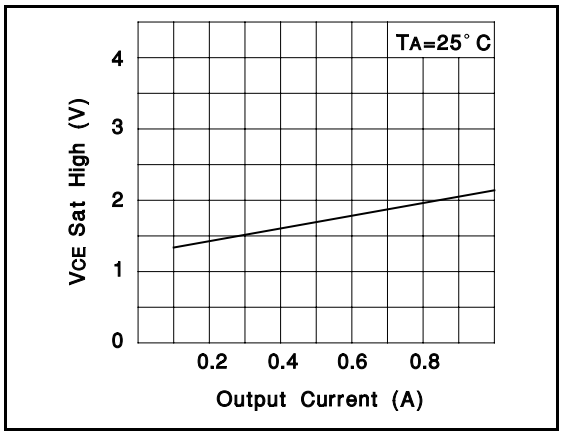

Figure 2. Typical Source Saturation Voltage vs Output Current (Conduction Period)

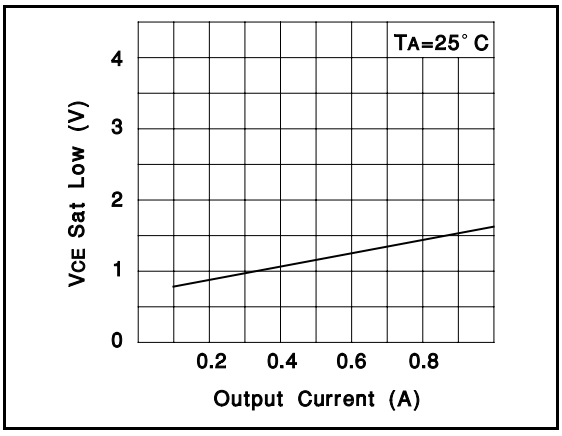

Figure 3. Typical Sink Saturation Voltage vs Output Current

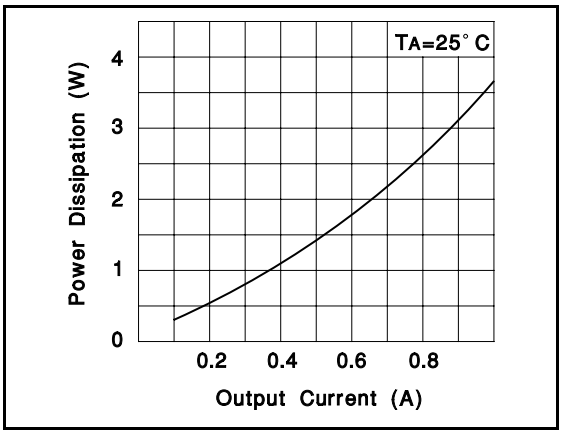

Figure 4. Typical Power Dissipation vs Output Current

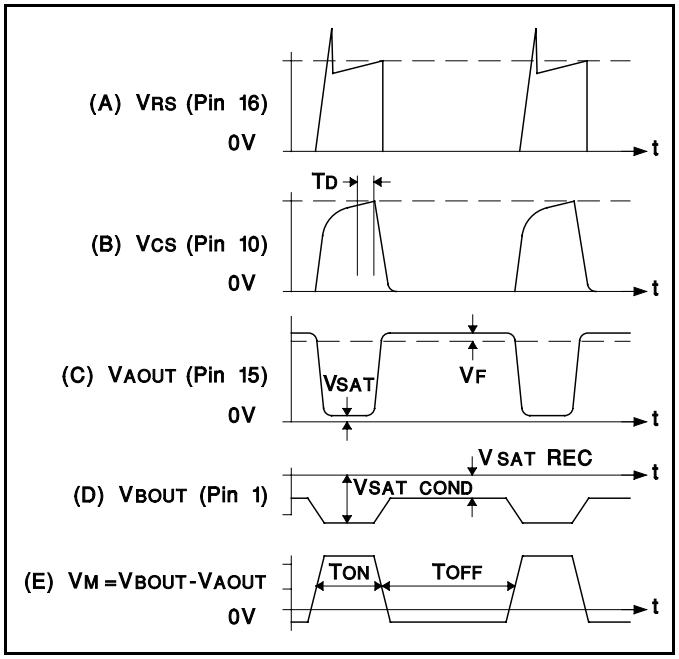

Figure 5. Typical Waveforms with MA Regulating (phase = 0)

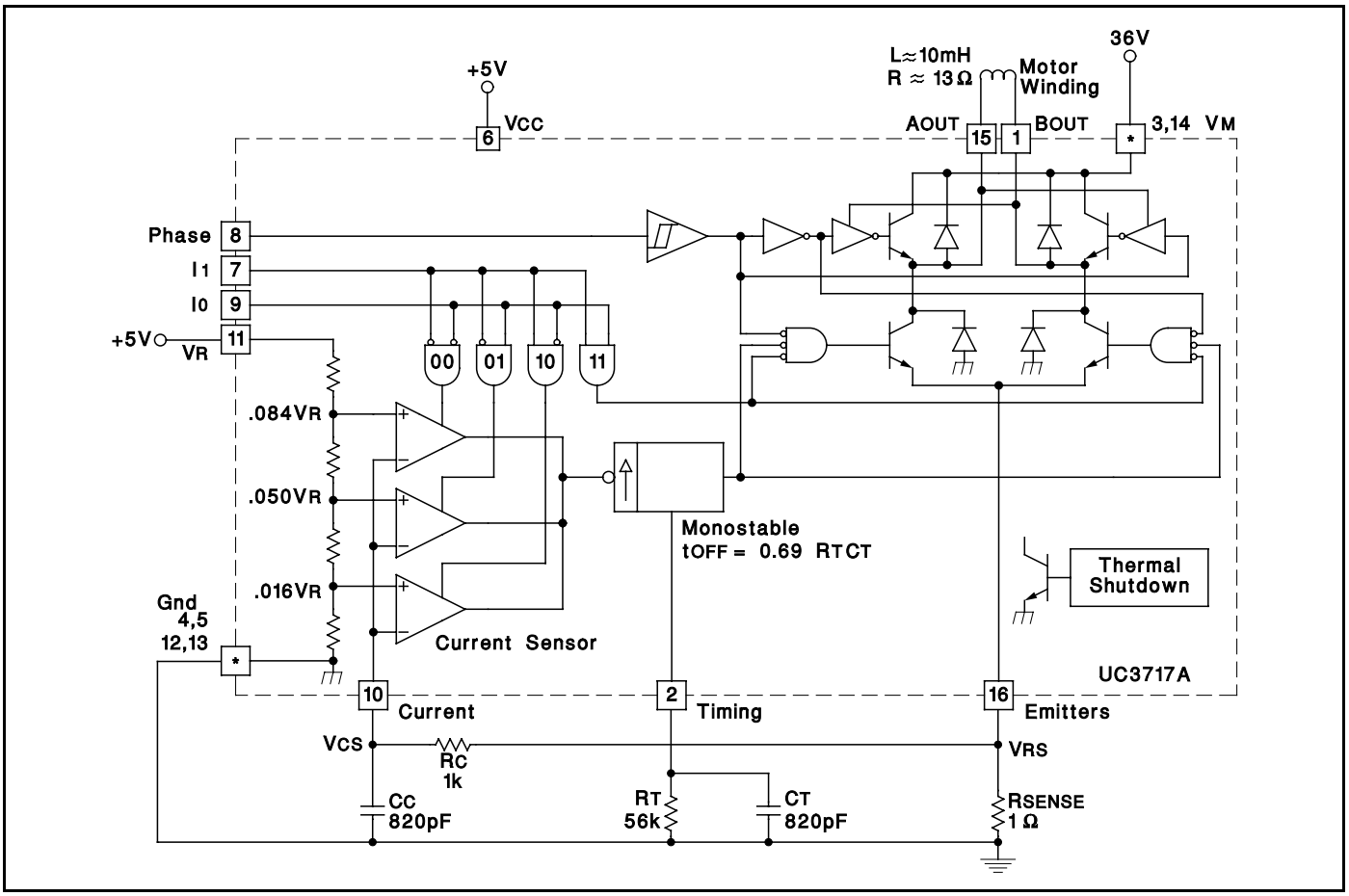

Figure 6. UC3717A Test Circuit

FUNCTIONAL DESCRIPTION

The UC3717A's drive circuit shown in the block diagram includes the following components.

(1) H-bridge output stage
(2) Phase polarity logic
(3) Voltage divider coupled with current sensing comparators
(4) Two-bit D/A current level select
(5) Monostable generating fixed off-time
(6) Thermal protection

OUTPUT STAGE

The UC3717A's output stage consists of four Darlington power transistors and associated recirculating power diodes in a full H-bridge configuration as shown in Figure 7. Also presented, is the new added feature of integrated bootstrap pull up, which improves device performance during switched mode operation. While in switched mode, with a low level phase polarity input, Q2 is on and Q3 is being switched. At the moment Q3 turns off, winding current begins to decay through the commutating diode pulling the collector of Q3 above the supply voltage. Meanwhile, Q6 turns on pulling the base of Q2 higher than its previous value. The net effect lowers the saturation voltage of source transistor Q2 during recirculation, thus improving efficiency by reducing power dissipation.

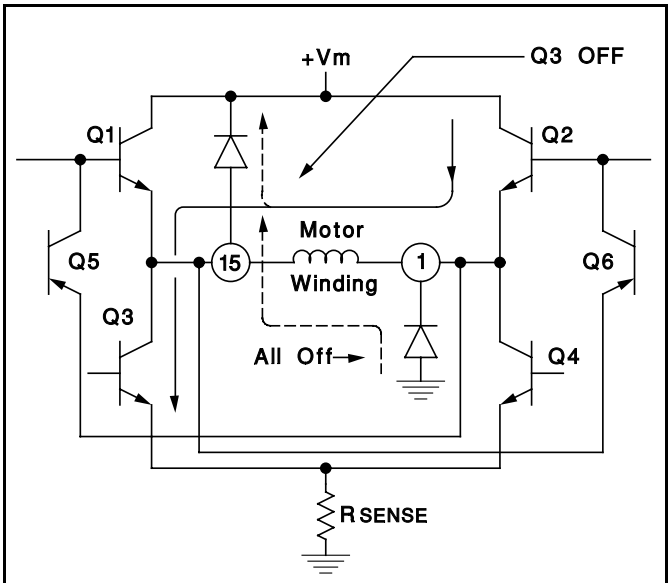

Note: Dashed lines indicate current decay paths.

Figure 7. Simplified Schematic of Output Stage

FUNCTIONAL DESCRIPTION (cont.)

PHASE POLARITY INPUT

The UC3717A phase polarity input controls current direction in the motor winding. Built-in hysteresis insures immunity to noise, something frequently present in switched drive environments. A low level phase polarity input enables Q2 and Q3 as shown in Figure 7. During phase reversal, the active transistors are both turned off while winding current delays through the commutating diodes shown. As winding current decays to zero, the inactive transistors Q1 and Q4 turn on and charge the winding with current of the reverse direction. This delay insures noise immunity and freedom from power supply current spikes caused by overlapping drive signals.

PHASE INPUT	Q1, Q4	Q2, Q3
LOW	OFF	ON
HIGH	ON	OFF

CURRENT CONTROL

The voltage divider, comparators, monostable, and two-bit D/A provide a means to sense winding peak current, select winding peak current, and disable the winding sink transistors.

The UC3717A switched driver accomplishes current control using an algorithm referred to as "fixed off-time." When a voltage is applied across the motor winding, the current through the winding increases exponentially. The current can be sensed across an external resistor as an analog voltage proportional to instantaneous current. This voltage is normally filtered with a simple RC low-pass network to remove high frequency transients, and then compared to one of the three selectable thresholds. The two bit D/A input signal determines which one of the three thresholds is selected, corresponding to a desired winding peak current level. At the moment the sense voltage rises above the selected threshold, the UC3717A's monostable is triggered and disables both output sink drivers for a fixed off-time. The winding current then circulates through the source transistor and appropriate diode. The reference terminal of the UC3717A provides a means of continuously adjusting the current threshold to allow microstepping. Table 1 presents the relationship between the two-bit D/A input signal and selectable current level.

TABLE 1

I_0	I_1	CURRENT LEVEL
0	0	100%
1	0	60%
0	1	19%
1	1	Current Inhibit

OVERLOAD PROTECTION

The UC3717A is equipped with a new, more reliable thermal shutdown circuit which limits the junction temperature to a maximum of 180C by reducing the winding current.

PERFORMANCE CONSIDERATIONS

In order to achieve optimum performance from the UC3717A careful attention should be given to the following items.

External Components: The UC3717A requires a minimal number of external components to form a complete control and switch drive unit. However, proper selection of external components is necessary for optimum performance. The timing pin, (pin 2) is normally connected to an RC network which sets the off-time for the sink power transistor during switched mode. As shown in Figure 8, prior to switched mode, the winding current increases exponentially to a peak value. Once peak current is attained the monostable is triggered which turns off the lower sink drivers for a fixed off-time. During off-time winding current decays through the appropriate diode and source transistor. The moment off-time times out, the motor current again rises exponentially producing the ripple waveform shown. The magnitude of winding ripple is a direct function of off-time. For a given off-time T_{OFF}, the values of R_T and C_T can be calculated from the expression:

$$T_{OFF} = 0.69 R_T C_T$$

with the restriction that R_T should be in the range of 10-100k. As shown in Figure 5, the switch frequency F_S is a function of T_{OFF} and T_{ON}. Since T_{ON} is a function of the reference voltage, sense resistor, motor supply, and winding electrical characteristics, it generally varies during different modes of operation. Thus, F_S may be approximated nominally as:

$$F_S = \tfrac{1}{1.5}\,(T_{OFF}).$$

Normally, Switch Frequency Is Selected Greater than

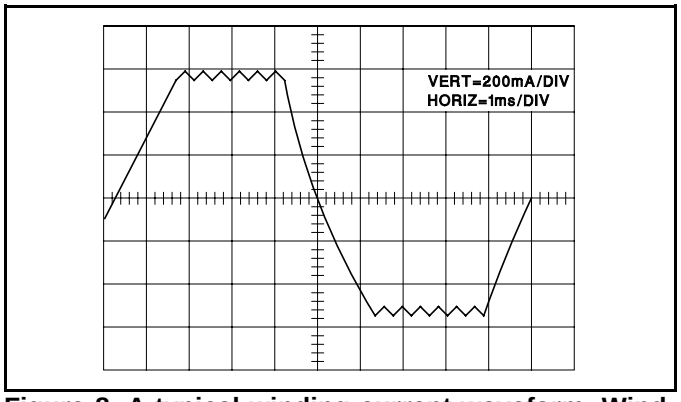

Figure 8. A typical winding current waveform. Winding current rises exponentially to a selected peak value. The peak value is limited by switched mode operation producing a ripple in winding current. A phase polarity reversal command is given and winding current decays to zero, then increases exponentially.

FUNCTIONAL DESCRIPTION (cont.)

Low-pass filter components R_C C_C should be selected so that all switching transients from the power transistors and commutating diodes are well smoothed, but the primary signal, which can be in the range of $1/T_{OFF}$ or higher must be passed. Figure 5A shows the waveform which must be smoothed, Figure 5B presents the desired waveform that just smoothes out overshoot without radical distortion.

The sense resistor should be chosen as small as practical to allow as much of the winding supply voltage to be used as overdrive to the motor winding. V_{RS}, the voltage across the sense resistor, should not exceed 1.5V.

Voltage Overdrive: In many applications, maximum speed or step rate is a desirable performance characteristic. Maximum step rate is a direct function of the time necessary to reverse winding current with each step. In response to a constant motor supply voltage, the winding current changes exponentially with time, whose shape is determined by the winding time constant and expressed as:

$$I_m = \frac{V_m}{R\,[1 - EXP\,(-R\tau/L)]}$$

as presented in Figure 9. With rated voltage applied, the time required to reach rated current is excessive when compared with the time required with over-voltage applied, even though the time constant L/R remains constant. With over-voltage however, the final value of current is excessive and must be prevented. This is accomplished with switch drive by repetitively switching the sink drivers on and off, so as to maintain an average value of current equal to the rated value. This results in a small amount of ripple in the controlled current, but the increase in step rate and performance may be considerable.

Interference: Electrical noise generated by the chopping action can cause interference problems, particularly in the vicinity of magnetic storage media. With this in mind, printed circuit layouts, wire runs and decoupling must be considered. 0.01 to 0.1µF ceramic capacitors for high frequency bypass located near the drive package across V+ and ground might be very helpful. The connection and ground leads of the current sensing components should be kept as short as possible.

Half-Stepping: In half step sequence the power input to the motor alternates between one or two phases being energized. In a two phase motor the electrical phase shift between the windings is 90°. The torque developed is the vector sum of the two windings energized. Therefore when only one winding is energized the torque of the motor is reduced by approximately 30%. This causes a torque ripple and if it is necessary to compensate for this, the V_R input can be used to boost the current of the single energized winding.

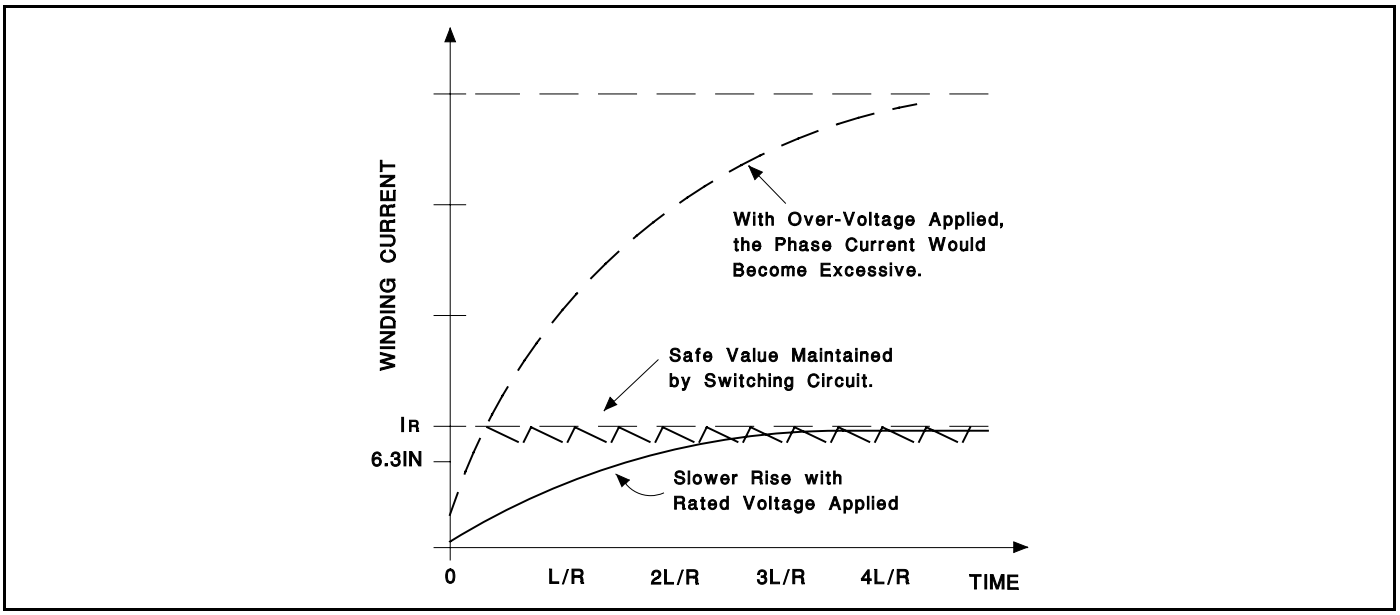

Figure 9. With rated voltage applied, winding current does not exceed rated value, but takes L/R seconds to reach 63% of its final value - probably too long. Increased performance requires an increase in applied voltage, of overdrive, and therefore a means to limit current. The UC3717A motor driver performs this task efficiently.

MOUNTING INSTRUCTIONS

The θ_{JA} of the UC3717AN plastic package can be reduced by soldering the GND pins to a suitable copper area of the printed circuit board or to an external heat sink. Due to different lead frame design, θ_{JA} of the ceramic J package cannot be similarly reduced.

The diagram of Figure 11 shows the maximum package power P_{TOT} and the θ_{JA} as a function of the side " l " of two equal square copper areas having a thickness of 35µ (see Figure 10).

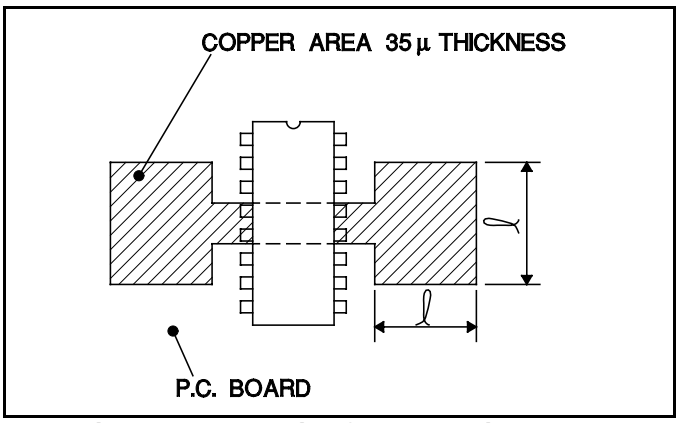

Figure 10. Example of P.C. Board Copper Area which is used as Heatsink.

During soldering the pins' temperature must not exceed 260°C and the soldering time must not be longer than 12 seconds.

The printed circuit copper area must be connected to electrical ground.

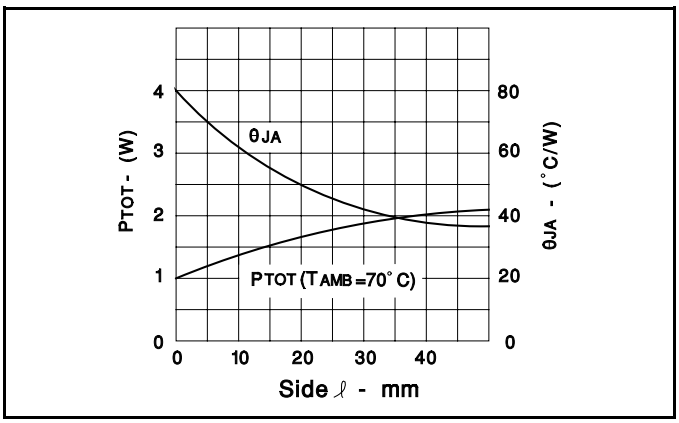

Figure 11. Maximum Package Power and Junction to Ambient Thermal Resistance vs Side "l".

APPLICATIONS

A typical chopper drive for a two phase bipolar permanent magnet or hybrid stepping motor is shown in Figure 12. The input can be controlled by a microprocessor, TTL, LS, or CMOS logic.

The timing diagram in Figure 13 shows the required signal input for a two phase, full step stepping sequence. Figure 14 shows the required input signal for a one phase-two phase stepping sequence called half-stepping.

The circuit of Figure 15 provides the signal shown in Figure 13, and in conjunction with the circuit shown in Figure 12 will implement a pulse-to-step two phase, full step, bi-directional motor drive.

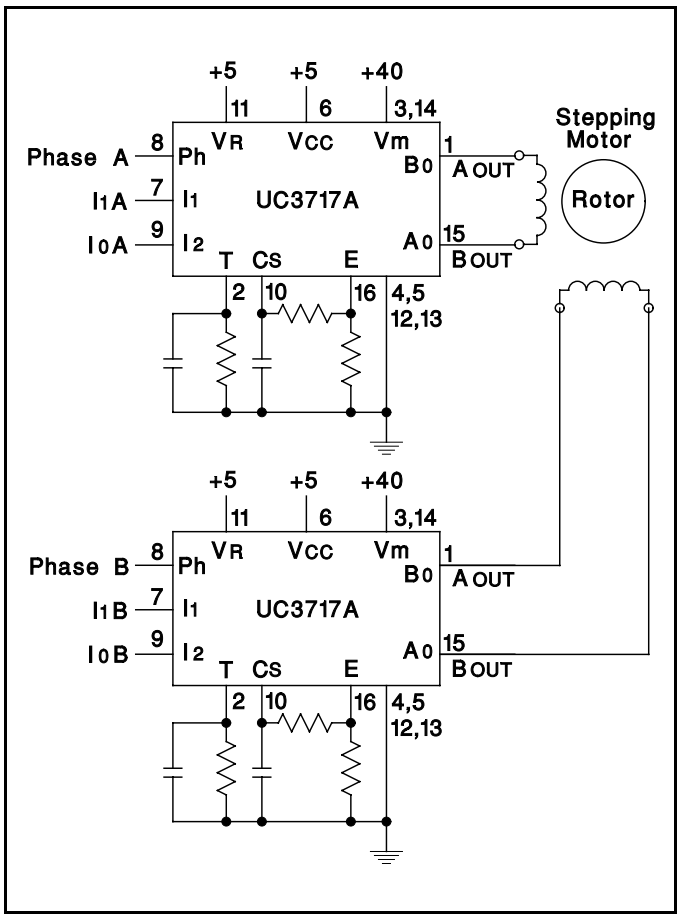

Figure 12. Typical Chopper Drive for a Two Phase Permanent Magnet Motor.

The schematic of Figure 16 shows a pulse to half step circuit generating the signal shown in Figure 14. Care has been taken to change the phase signal the same time the current inhibit is applied. This will allow the current to decay faster and therefore enhance the motor performance at high step rates.

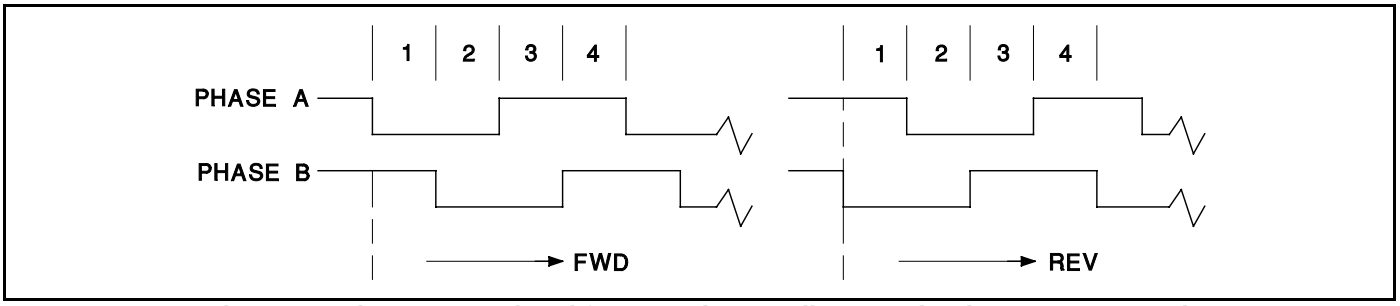

Figure 13. Phase Input Signal for Two Phase Full Step Drive (4 Step Sequence)

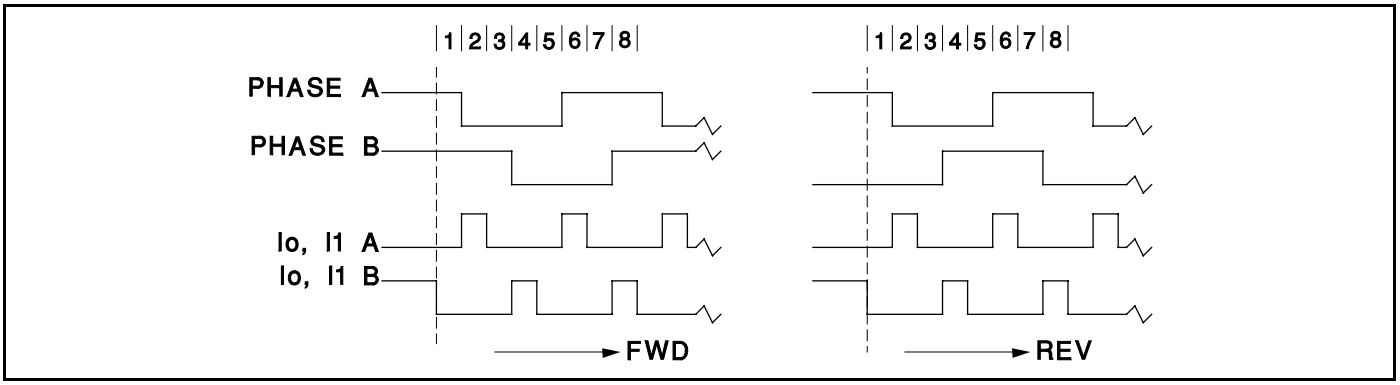

Figure 14. Phase and Current-Inhibit Signal for Half-Stepping (8 Step Sequence)

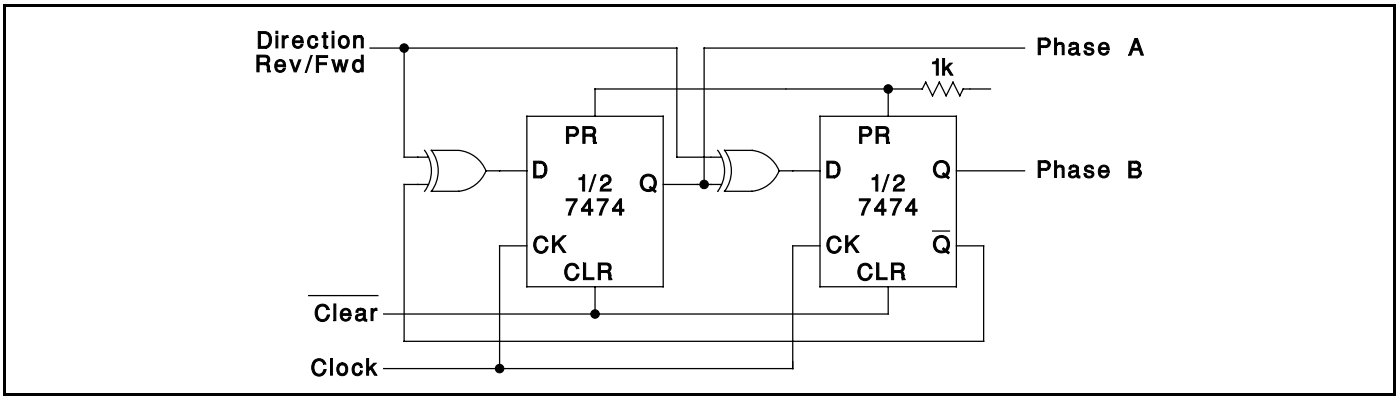

Figure 15. Full Step, Bi-directional Two Phase Drive Logic

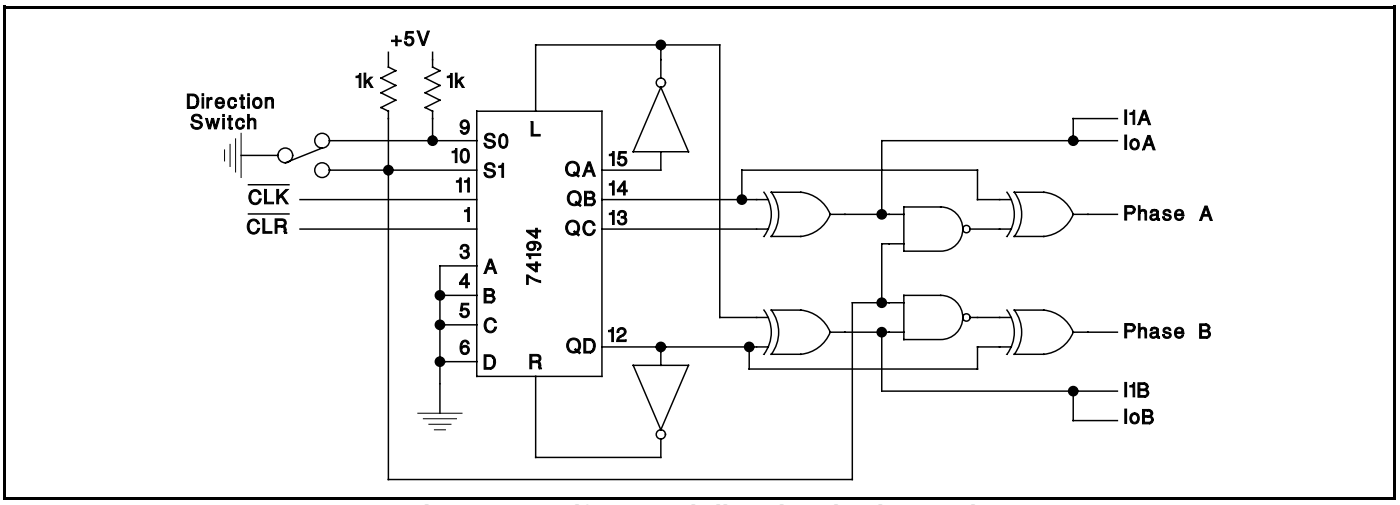

Figure 16. Half-Step, Bi-directional Drive Logic

UNITRODE CORPORATION
7 CONTINENTAL BLVD. • MERRIMACK, NH 03054
TEL. (603) 424-2410 • FAX (603) 424-3460

PACKAGING INFORMATION

Orderable Device	Status (1)	Package Type	Package Drawing	Pins	Package Qty	Eco Plan (2)	Lead/Ball Finish	MSL Peak Temp (3)
UC3717AN	ACTIVE	PDIP	N	16	25	Green (RoHS & no Sb/Br)	CU NIPDAU	N / A for Pkg Type
UC3717ANG4	ACTIVE	PDIP	N	16	25	Green (RoHS & no Sb/Br)	CU NIPDAU	N / A for Pkg Type
UC3717AQ	ACTIVE	PLCC	FN	20	46	Green (RoHS & no Sb/Br)	CU SN	Level-2-260C-1 YEAR
UC3717AQG3	ACTIVE	PLCC	FN	20	46	Green (RoHS & no Sb/Br)	CU SN	Level-2-260C-1 YEAR
UC3717AQTR	ACTIVE	PLCC	FN	20	1000	Green (RoHS & no Sb/Br)	CU SN	Level-2-260C-1 YEAR
UC3717AQTRG3	ACTIVE	PLCC	FN	20	1000	Green (RoHS & no Sb/Br)	CU SN	Level-2-260C-1 YEAR

(1) The marketing status values are defined as follows:
ACTIVE: Product device recommended for new designs.
LIFEBUY: TI has announced that the device will be discontinued, and a lifetime-buy period is in effect.
NRND: Not recommended for new designs. Device is in production to support existing customers, but TI does not recommend using this part in a new design.
PREVIEW: Device has been announced but is not in production. Samples may or may not be available.
OBSOLETE: TI has discontinued the production of the device.

(2) Eco Plan - The planned eco-friendly classification: Pb-Free (RoHS), Pb-Free (RoHS Exempt), or Green (RoHS & no Sb/Br) - please check http://www.ti.com/productcontent for the latest availability information and additional product content details.
TBD: The Pb-Free/Green conversion plan has not been defined.
Pb-Free (RoHS): TI's terms "Lead-Free" or "Pb-Free" mean semiconductor products that are compatible with the current RoHS requirements for all 6 substances, including the requirement that lead not exceed 0.1% by weight in homogeneous materials. Where designed to be soldered at high temperatures, TI Pb-Free products are suitable for use in specified lead-free processes.
Pb-Free (RoHS Exempt): This component has a RoHS exemption for either 1) lead-based flip-chip solder bumps used between the die and package, or 2) lead-based die adhesive used between the die and leadframe. The component is otherwise considered Pb-Free (RoHS compatible) as defined above.
Green (RoHS & no Sb/Br): TI defines "Green" to mean Pb-Free (RoHS compatible), and free of Bromine (Br) and Antimony (Sb) based flame retardants (Br or Sb do not exceed 0.1% by weight in homogeneous material)

(3) MSL, Peak Temp. -- The Moisture Sensitivity Level rating according to the JEDEC industry standard classifications, and peak solder temperature.

Important Information and Disclaimer: The information provided on this page represents TI's knowledge and belief as of the date that it is provided. TI bases its knowledge and belief on information provided by third parties, and makes no representation or warranty as to the accuracy of such information. Efforts are underway to better integrate information from third parties. TI has taken and continues to take reasonable steps to provide representative and accurate information but may not have conducted destructive testing or chemical analysis on incoming materials and chemicals. TI and TI suppliers consider certain information to be proprietary, and thus CAS numbers and other limited information may not be available for release.

In no event shall TI's liability arising out of such information exceed the total purchase price of the TI part(s) at issue in this document sold by TI to Customer on an annual basis.

TAPE AND REEL INFORMATION

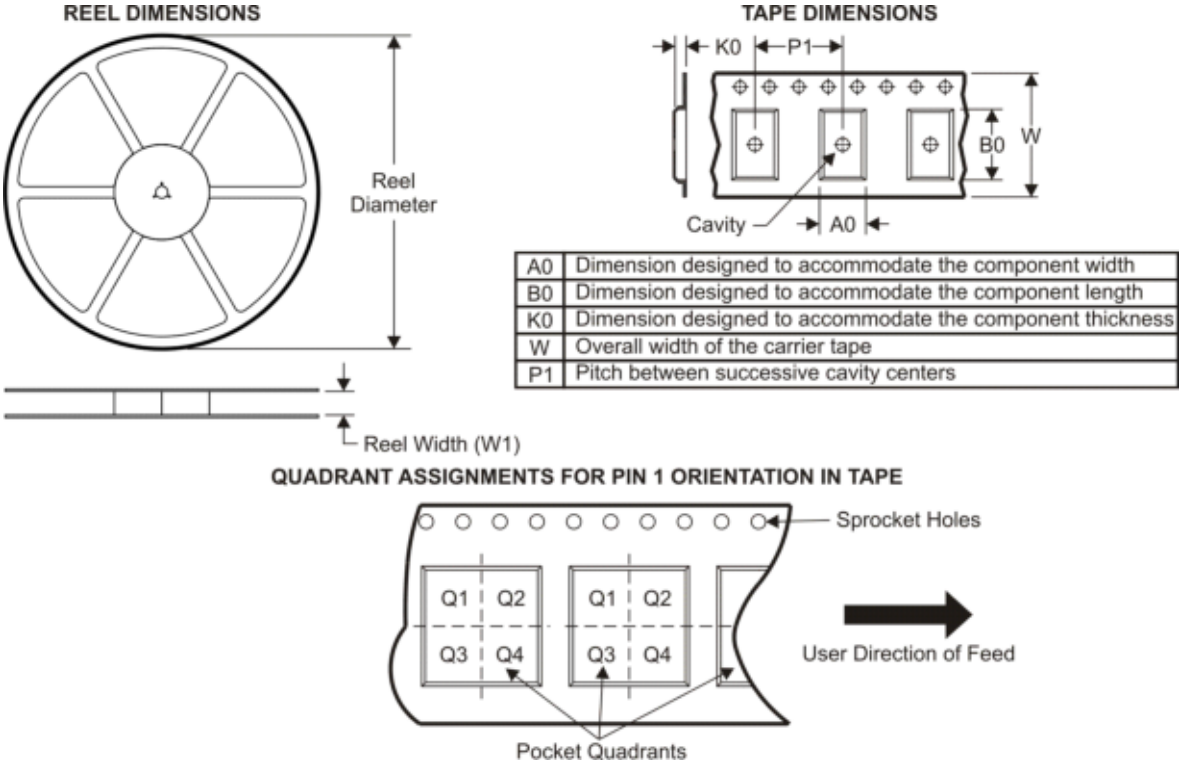

A0	Dimension designed to accommodate the component width
B0	Dimension designed to accommodate the component length
K0	Dimension designed to accommodate the component thickness
W	Overall width of the carrier tape
P1	Pitch between successive cavity centers

*All dimensions are nominal

Device	Package Type	Package Drawing	Pins	SPQ	Reel Diameter (mm)	Reel Width W1 (mm)	A0 (mm)	B0 (mm)	K0 (mm)	P1 (mm)	W (mm)	Pin1 Quadrant
UC3717AQTR	PLCC	FN	20	1000	330.0	16.4	10.3	10.3	4.9	12.0	16.0	Q1

TAPE AND REEL BOX DIMENSIONS

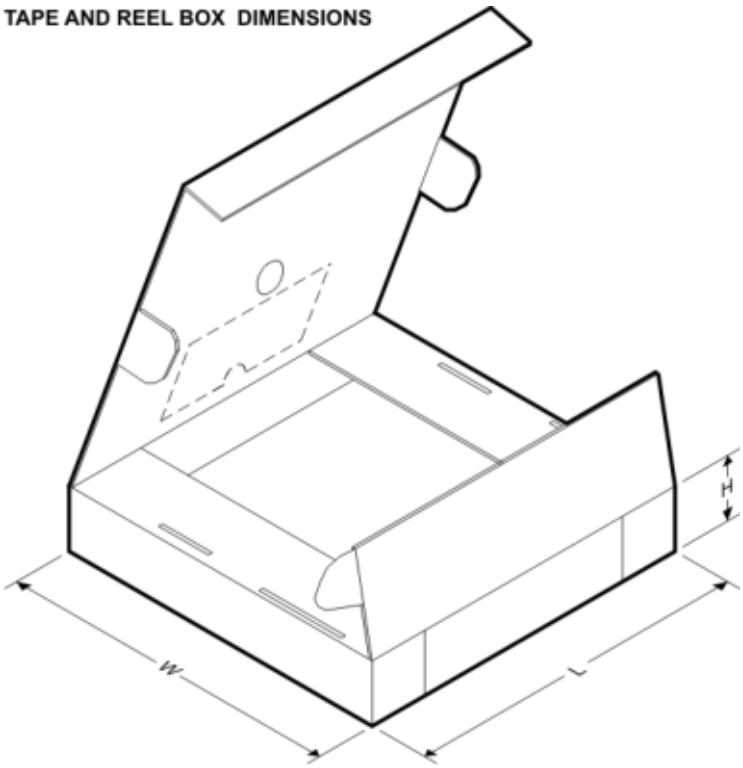

*All dimensions are nominal

Device	Package Type	Package Drawing	Pins	SPQ	Length (mm)	Width (mm)	Height (mm)
UC3717AQTR	PLCC	FN	20	1000	346.0	346.0	33.0

IMPORTANT NOTICE

Texas Instruments Incorporated and its subsidiaries (TI) reserve the right to make corrections, modifications, enhancements, improvements, and other changes to its products and services at any time and to discontinue any product or service without notice. Customers should obtain the latest relevant information before placing orders and should verify that such information is current and complete. All products are sold subject to TI's terms and conditions of sale supplied at the time of order acknowledgment.

TI warrants performance of its hardware products to the specifications applicable at the time of sale in accordance with TI's standard warranty. Testing and other quality control techniques are used to the extent TI deems necessary to support this warranty. Except where mandated by government requirements, testing of all parameters of each product is not necessarily performed.

TI assumes no liability for applications assistance or customer product design. Customers are responsible for their products and applications using TI components. To minimize the risks associated with customer products and applications, customers should provide adequate design and operating safeguards.

TI does not warrant or represent that any license, either express or implied, is granted under any TI patent right, copyright, mask work right, or other TI intellectual property right relating to any combination, machine, or process in which TI products or services are used. Information published by TI regarding third-party products or services does not constitute a license from TI to use such products or services or a warranty or endorsement thereof. Use of such information may require a license from a third party under the patents or other intellectual property of the third party, or a license from TI under the patents or other intellectual property of TI.

Reproduction of TI information in TI data books or data sheets is permissible only if reproduction is without alteration and is accompanied by all associated warranties, conditions, limitations, and notices. Reproduction of this information with alteration is an unfair and deceptive business practice. TI is not responsible or liable for such altered documentation. Information of third parties may be subject to additional restrictions.

Resale of TI products or services with statements different from or beyond the parameters stated by TI for that product or service voids all express and any implied warranties for the associated TI product or service and is an unfair and deceptive business practice. TI is not responsible or liable for any such statements.

TI products are not authorized for use in safety-critical applications (such as life support) where a failure of the TI product would reasonably be expected to cause severe personal injury or death, unless officers of the parties have executed an agreement specifically governing such use. Buyers represent that they have all necessary expertise in the safety and regulatory ramifications of their applications, and acknowledge and agree that they are solely responsible for all legal, regulatory and safety-related requirements concerning their products and any use of TI products in such safety-critical applications, notwithstanding any applications-related information or support that may be provided by TI. Further, Buyers must fully indemnify TI and its representatives against any damages arising out of the use of TI products in such safety-critical applications.

TI products are neither designed nor intended for use in military/aerospace applications or environments unless the TI products are specifically designated by TI as military-grade or "enhanced plastic." Only products designated by TI as military-grade meet military specifications. Buyers acknowledge and agree that any such use of TI products which TI has not designated as military-grade is solely at the Buyer's risk, and that they are solely responsible for compliance with all legal and regulatory requirements in connection with such use.

TI products are neither designed nor intended for use in automotive applications or environments unless the specific TI products are designated by TI as compliant with ISO/TS 16949 requirements. Buyers acknowledge and agree that, if they use any non-designated products in automotive applications, TI will not be responsible for any failure to meet such requirements.

Following are URLs where you can obtain information on other Texas Instruments products and application solutions:

Products		**Applications**	
Amplifiers	amplifier.ti.com	Audio	www.ti.com/audio
Data Converters	dataconverter.ti.com	Automotive	www.ti.com/automotive
DLP® Products	www.dlp.com	Broadband	www.ti.com/broadband
DSP	dsp.ti.com	Digital Control	www.ti.com/digitalcontrol
Clocks and Timers	www.ti.com/clocks	Medical	www.ti.com/medical
Interface	interface.ti.com	Military	www.ti.com/military
Logic	logic.ti.com	Optical Networking	www.ti.com/opticalnetwork
Power Mgmt	power.ti.com	Security	www.ti.com/security
Microcontrollers	microcontroller.ti.com	Telephony	www.ti.com/telephony
RFID	www.ti-rfid.com	Video & Imaging	www.ti.com/video
RF/IF and ZigBee® Solutions	www.ti.com/lprf	Wireless	www.ti.com/wireless

Mailing Address: Texas Instruments, Post Office Box 655303, Dallas, Texas 75265
Copyright © 2009, Texas Instruments Incorporated