UC3842/UC3843/UC3844/UC3845

SMPS Controller

Features

- Low Start up Current
- Maximum Duty Clamp
- UVLO With Hysteresis
- Operating Frequency up to 500KHz

Description

The UC3842/UC3843/UC3844/UC3845 are fixed frequencycurrent-mode PWM controller. They are specially designed for Off-Line and DC to DC converter applications with minimum external components. These integrated circuits feature a trimmed oscillator for precise duty cycle control, a temperature compensated reference, high gain error amplifier, current sensing comparator and a high current totempole output for driving a Power MOSFET. The UC3842 and UC3844 have UVLO thresholds of 16V (on) and 10V (off). The UC3843 and UC3845 are 8.5V(on) and 7.9V (off). The UC3842 and UC3843 can operate within 100% duty cycle. The UC3844 and UC3845 can operate with 50% duty cycle.

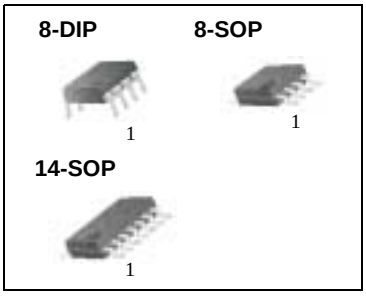

Internal Block Diagram

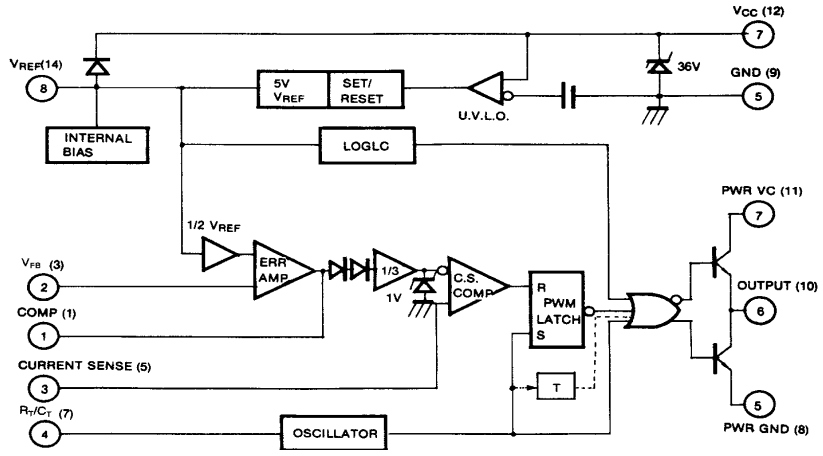

* NORMALLY 8DIP/8SOP PIN NO.
* ( ) IS 14SOP PINNO.
* TOGGLE FLIP FLOP USED ONLY IN UC3844, UC3845

©2002 Fairchild Semiconductor Corporation

Absolute Maximum Ratings

Parameter	Symbol	Value	Unit
Supply Voltage	V_{CC}	30	V
Output Current	I_O	±1	A
Analog Inputs (Pin 2.3)	$V_{(ANA)}$	-0.3 to 6.3	V
Error Amp Output Sink Current	$I_{SINK\ (E.A)}$	10	mA
Power Dissipation at T_A≤25°C (8DIP)	P_D(Note1,2)	1200	mW
Power Dissipation at T_A≤25°C (8SOP)	P_D(Note1,2)	460	mW
Power Dissipation at T_A≤25°C (14SOP)	P_D(Note1,2)	680	mW
Storage Temperature Range	T_{STG}	-65 ~ +150	°C
Lead Temperature (Soldering, 10sec)	T_{LEAD}	+300	°C

Note:

1. Board Thickness 1.6mm, Board Dimension 76.2mm ×114.3mm, (Reference EIA / JSED51-3, 51-7)
2. Do not exceeed P_D and SOA (Safe Operation Area)

Power Dissipation Curve

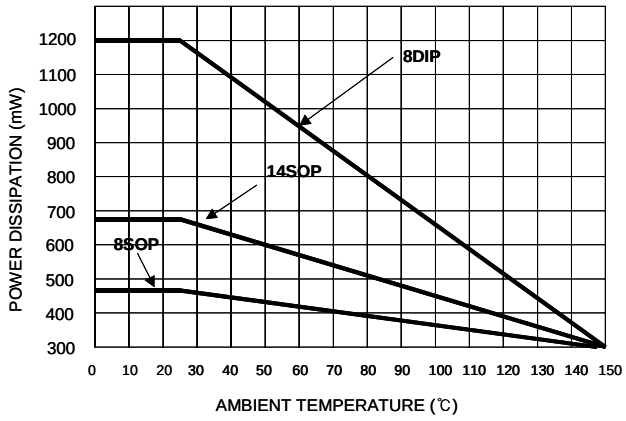

Thermal Data

Characteristic	Symbol	8-DIP	8-SOP	14-SOP	Unit
Thermal Resistance Junction-ambient	$R_{thj\text{-}amb(MAX)}$	100	265	180	°C/W

Pin Array

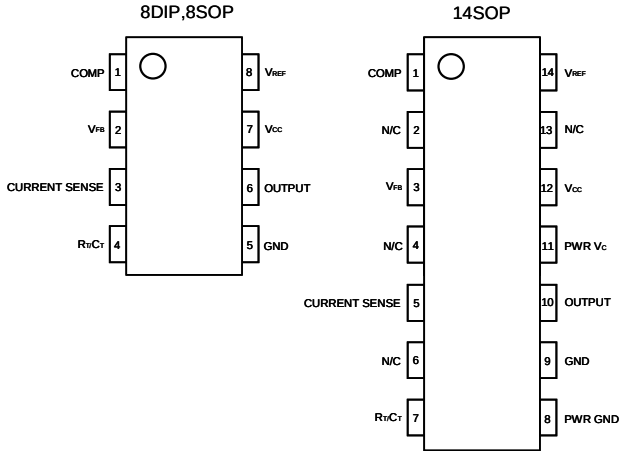

Electrical Characteristics

(V_{CC}=15V, R_T=10kΩ, C_T=3.3nF, T_A= 0°C to +70°C, unless otherwise specified)

Parameter	Symbol	Conditions	Min.	Typ.	Max.	Unit
REFERENCE SECTION						
Reference Output Voltage	V_{REF}	T_J = 25°C, I_{REF} = 1mA	4.90	5.00	5.10	V
Line Regulation	ΔV_{REF}	12V ≤ V_{CC} ≤ 25V	-	6	20	mV
Load Regulation	ΔV_{REF}	1mA ≤ I_{REF} ≤ 20mA	-	6	25	mV
Short Circuit Output Current	I_{SC}	T_A = 25°C	-	-100	-180	mA
OSCILLATOR SECTION						
Oscillation Frequency	f	T_J = 25°C	47	52	57	kHz
Frequency Change with Voltage	$\Delta f/\Delta V_{CC}$	12V ≤ V_{CC} ≤ 25V	-	0.05	1	%
Oscillator Amplitude	V_{OSC}	-	-	1.6	-	V_{P-P}
ERROR AMPLIFIER SECTION						
Input Bias Current	I_{BIAS}	-	-	-0.1	-2	µA
Input Voltage	$V_{I(E>A)}$	V_{pin1} = 2.5V	2.42	2.50	2.58	V
Open Loop Voltage Gain	G_{VO}	2V ≤ V_O ≤ 4V (Note3)	65	90	-	dB
Power Supply Rejection Ratio	PSRR	12V ≤ V_{CC} ≤ 25V (Note3)	60	70	-	dB
Output Sink Current	I_{SINK}	V_{pin2} = 2.7V, V_{pin1} = 1.1V	2	7	-	mA
Output Source Current	I_{SOURCE}	V_{pin2} = 2.3V, V_{pin1} = 5V	-0.6	-1.0	-	mA
High Output Voltage	V_{OH}	V_{pin2} = 2.3V, R_L = 15kΩ to GND	5	6	-	V
Low Output Voltage	V_{OL}	V_{pin2} = 2.7V, R_L = 15kΩ to Pin 8	-	0.8	1.1	V
CURRENT SENSE SECTION						
Gain	G_V	(Note 1 & 2)	2.85	3	3.15	V/V
Maximum Input Signal	$V_{I(MAX)}$	V_{pin1} = 5V(Note 1)	0.9	1	1.1	V
Power Supply Rejection Ratio	PSRR	12V ≤ V_{CC} ≤ 25V (Note 1,3)	-	70	-	dB
Input Bias Current	I_{BIAS}	-	-	-3	-10	µA
OUTPUT SECTION						
Low Output Voltage	V_{OL}	I_{SINK} = 20mA	-	0.08	0.4	V
		I_{SINK} = 200mA	-	1.4	2.2	V
High Output Voltage	V_{OH}	I_{SOURCE} = 20mA	13	13.5	-	V
		I_{SOURCE} = 200mA	12	13.0	-	V
Rise Time	t_R	T_J = 25°C, C_L= 1nF (Note 3)	-	45	150	ns
Fall Time	t_F	T_J = 25°C, C_L= 1nF (Note 3)	-	35	150	ns
UNDER-VOLTAGE LOCKOUT SECTION						
Start Threshold	$V_{TH(ST)}$	UC3842/UC3844	14.5	16.0	17.5	V
		UC3843/UC3845	7.8	8.4	9.0	V
Min. Operating Voltage (After Turn On)	$V_{OPR(MIN)}$	UC3842/UC3844	8.5	10.0	11.5	V
		UC3843/UC3844	7.0	7.6	8.2	V

Electrical Characteristics (Continued)

(V_{CC}=15V, R_T=10kΩ, C_T=3.3nF, T_A= 0°C to +70°C, unless otherwise specified)

Parameter	Symbol	Conditions	Min.	Typ.	Max.	Unit
PWM SECTION						
Max. Duty Cycle	$D_{(Max)}$	UC3842/UC3843	95	97	100	%
	$D_{(Max)}$	UC3844/UC3845	47	48	50	%
Min. Duty Cycle	$D_{(MIN)}$	-	-	-	0	%
TOTAL STANDBY CURRENT						
Start-Up Current	I_{ST}	-	-	0.45	1	mA
Operating Supply Current	$I_{CC(OPR)}$	V_{pin3}=V_{pin2}=ON	-	14	17	mA
Zener Voltage	V_Z	I_{CC} = 25mA	30	38	-	V

Adjust V_{CC} above the start threshould before setting at 15V

Note:

1. Parameter measured at trip point of latch
2. Gain defined as:

$$A = \frac{\Delta V_{pin1}}{\Delta V_{pin3}} \quad ,0 \le V_{pin3} \le 0.8V$$

3. These parameters, although guaranteed, are not 100 tested in production.

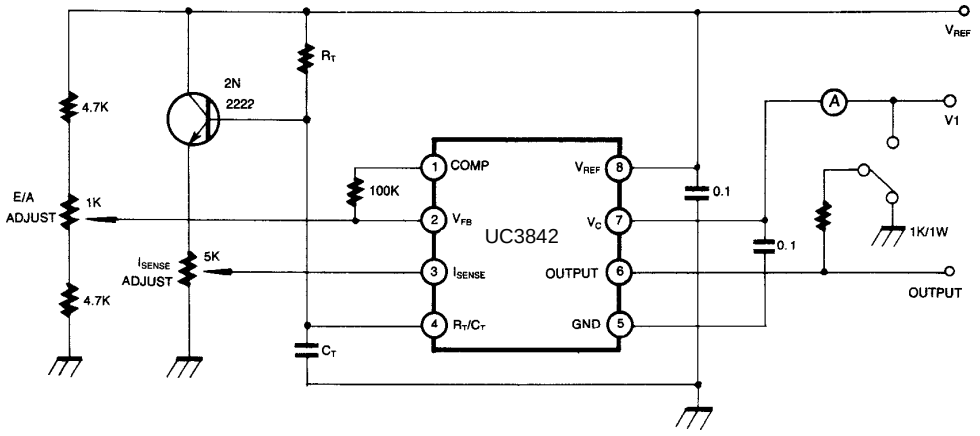

Figure 1. Open Loop Test Circuit

High peak currents associated with capacitive loads necessitate careful grounding techniques Timing and bypass capacitors should be connected close to pin 5 in a single point ground. The transistor and 5kΩ potentiometer are used to sample the oscillator waveform and apply an adjustable ramp to pin 3.

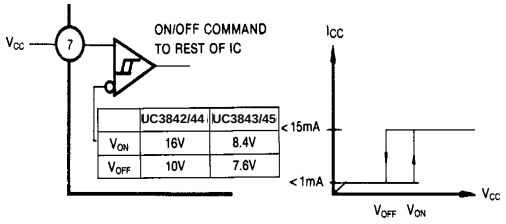

	UC3842/44	UC3843/45
V_{ON}	16V	8.4V
V_{OFF}	10V	7.6V

Figure 2. Under Voltage Lockout

During Under-Voltage Lock-Out, the output driver is biased to a high impedance state. Pin 6 should be shunted to ground with a bleeder resistor to prevent activating the power switch with output leakage current.

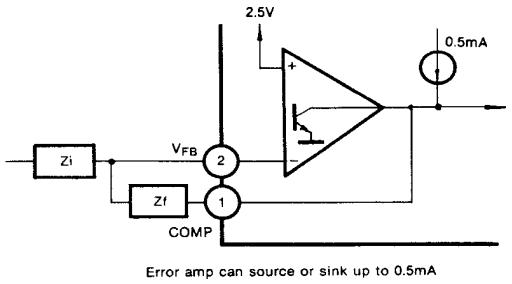

Figure 3. Error Amp Configuration

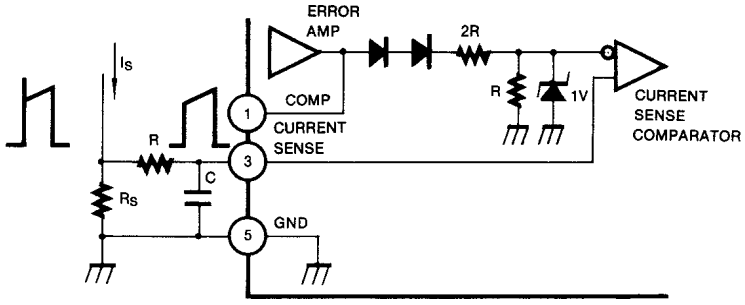

Figure 4. Current Sense Circuit

Peak current (I_S) is determined by the formula:

$$I_S(MAX) = \frac{1.0V}{R_S}$$

A small RC filter may be required to suppress switch transients.

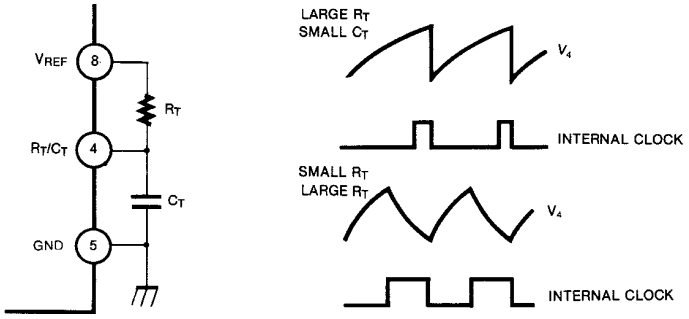

Figure 5. Oscillator Waveforms and Maximum Duty Cycle

Oscillator timing capacitor, C_T, is charged by V_{REF} through R_T and discharged by an internal current source. During the discharge time, the internal clock signal blanks the output to the low state. Selection of R_T and C_T therefore determines both oscillator frequency and maximum duty cycle. Charge and discharge times are determined by the formulas:

$t_C = 0.55\ R_T\ C_T$

$$t_D = R_T C_T \ln\left(\frac{0.0063R_T - 2.7}{0.0063R_T - 4}\right)$$

Frequency, then, is: $f=(t_C + t_d)^{-1}$

$$For\ R_T > 5K\Omega, f = \frac{1.8}{R_T C_T}$$

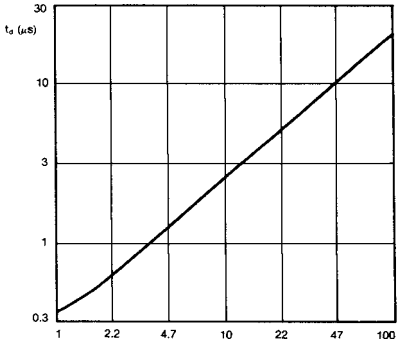

Figure 6. Oscillator Dead Time & Frequency

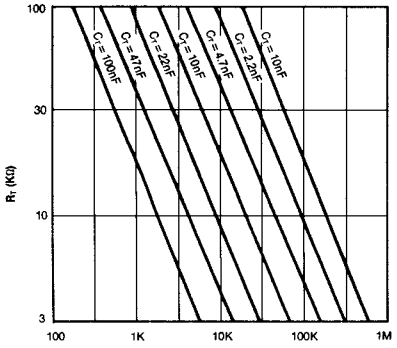

Figure 7. Timing Resistance vs Frequency

(Deadtime vs C_T RT > 5kΩ)

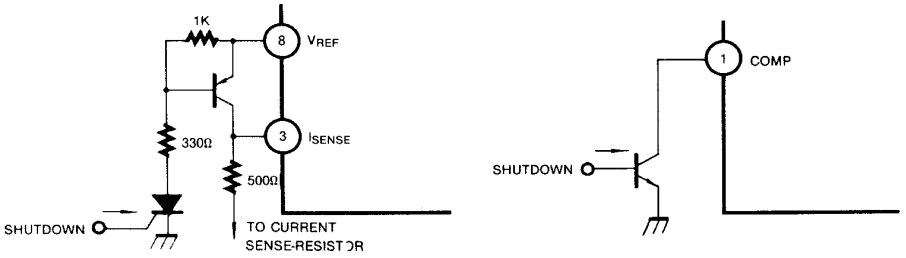

Figure 8. Shutdown Techniques

Shutdown of the UC3842 can be accomplished by two methods; either raise pin 3 above 1V or pull pin 1 below a voltage two diode drops above ground. Either method causes the output of the PWM comparator to be high (refer to block diagram). The PWM latch is reset dominant so that the output will remain low until the next clock cycle after the shutdown condition at pins 1 and/or 3 is removed. In one example, an externally latched shutdown may be accomplished by adding an SCR which will be reset by cycling V_{CC} below the lower UVLO threshold. At this point the reference turns off, allowing the SCR to reset.

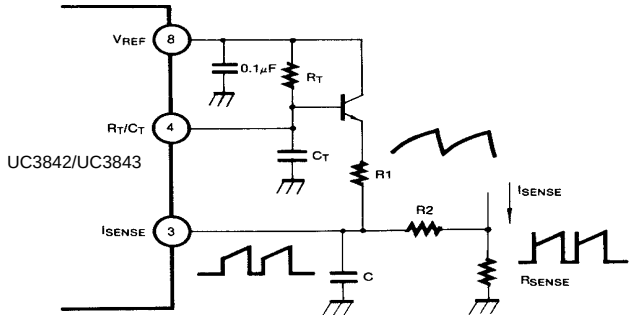

Figure 9. Slope Compensation

A fraction of the oscillator ramp can be resistively summed with the current sense signal to provide slope compensation for converters requiring duty cycles over 50%. Note that capacitor, C_T, forms a filter with R2 to suppress the leading edge switch spikes.

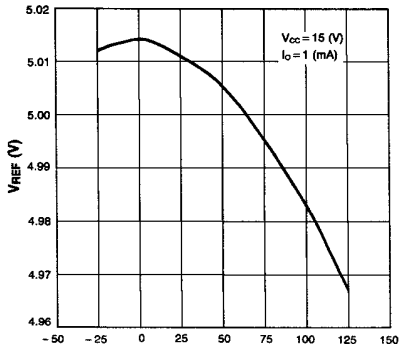

Figure 10. Temperature Drift (Vref)

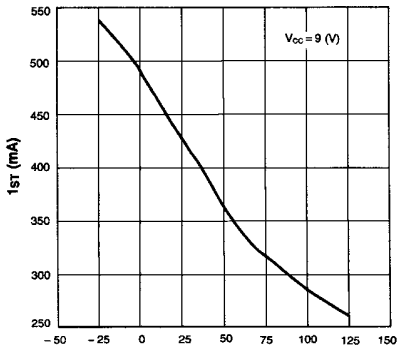

Figure 11. Temperature Drift (Ist)

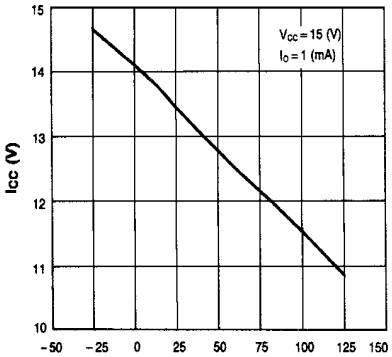

Figure 12. Temperature Drift (Icc)

Mechanical Dimensions

Package

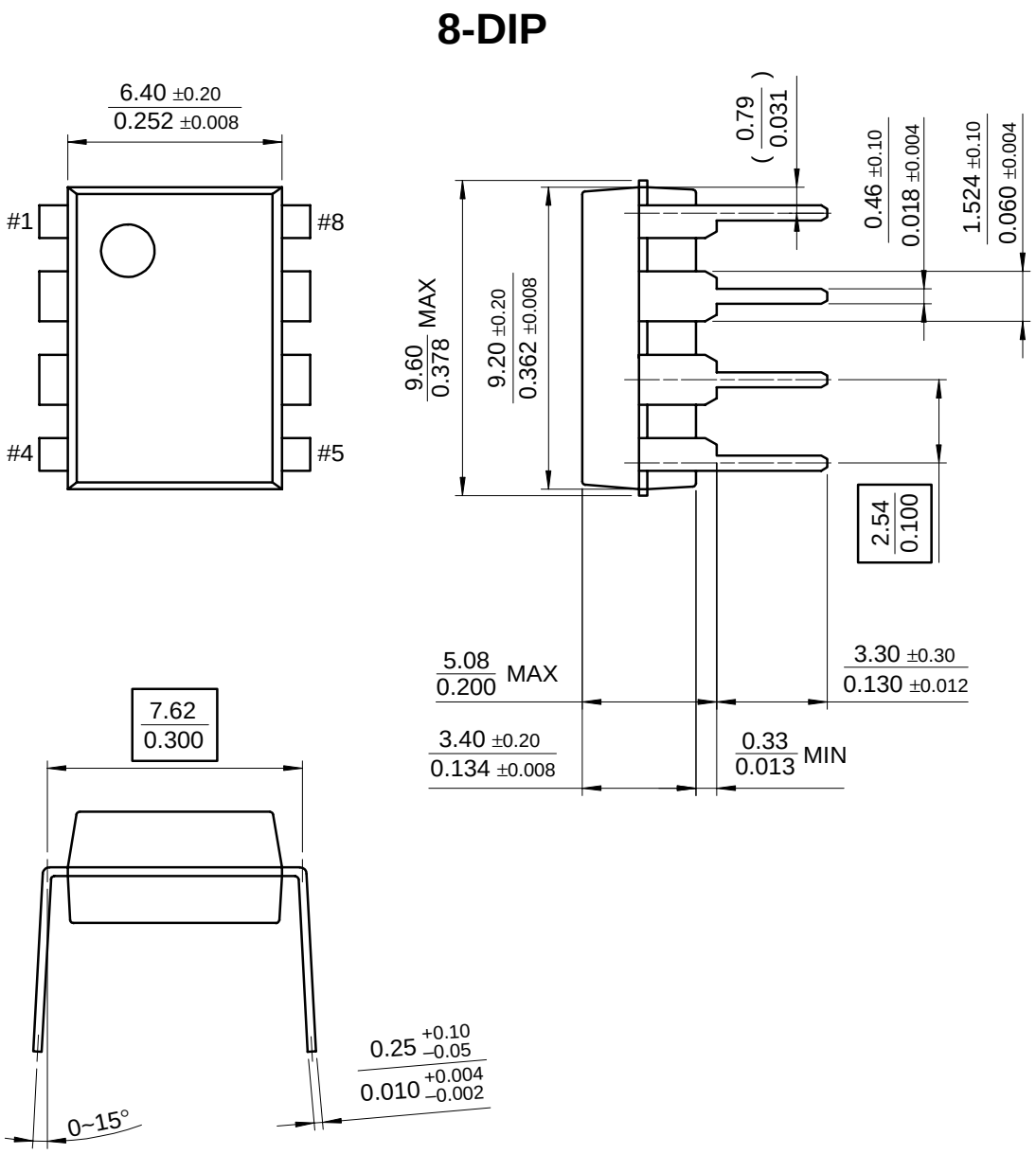

Mechanical Dimensions (Continued)

Package

8-SOP

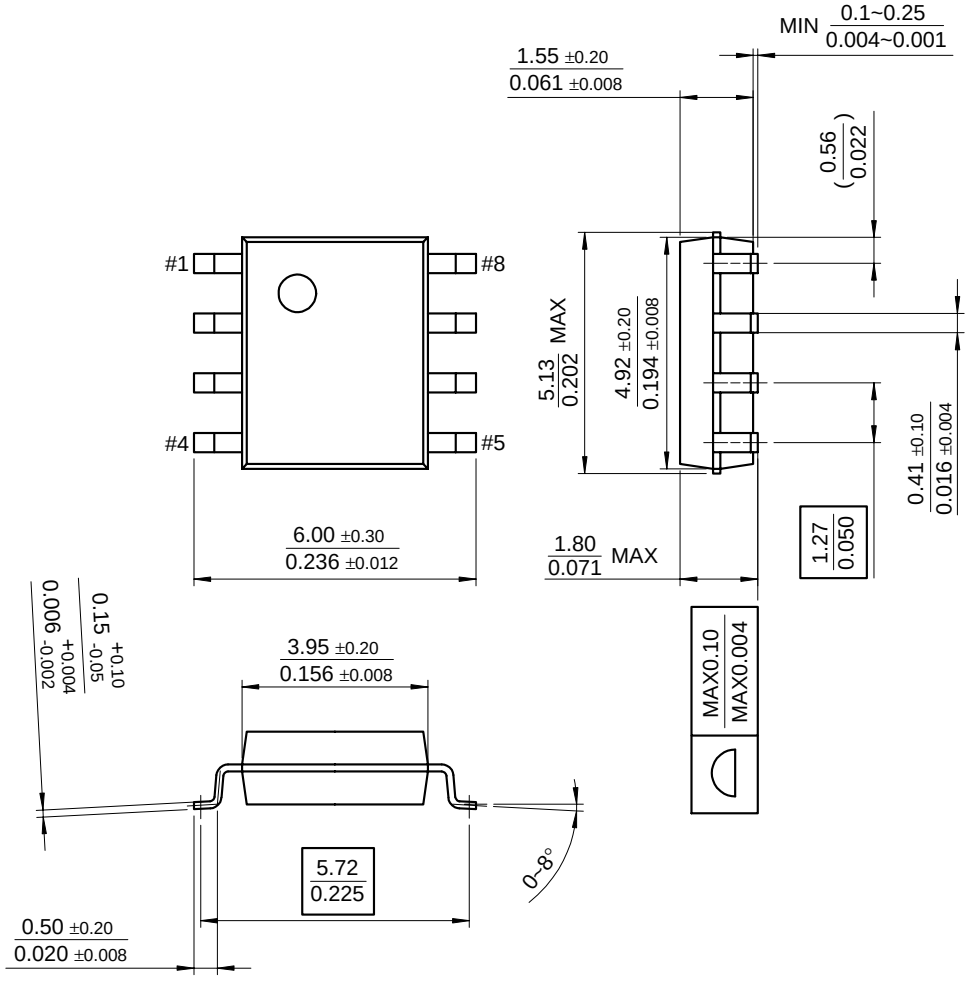

Mechanical Dimensions (Continued)

Package

14-SOP

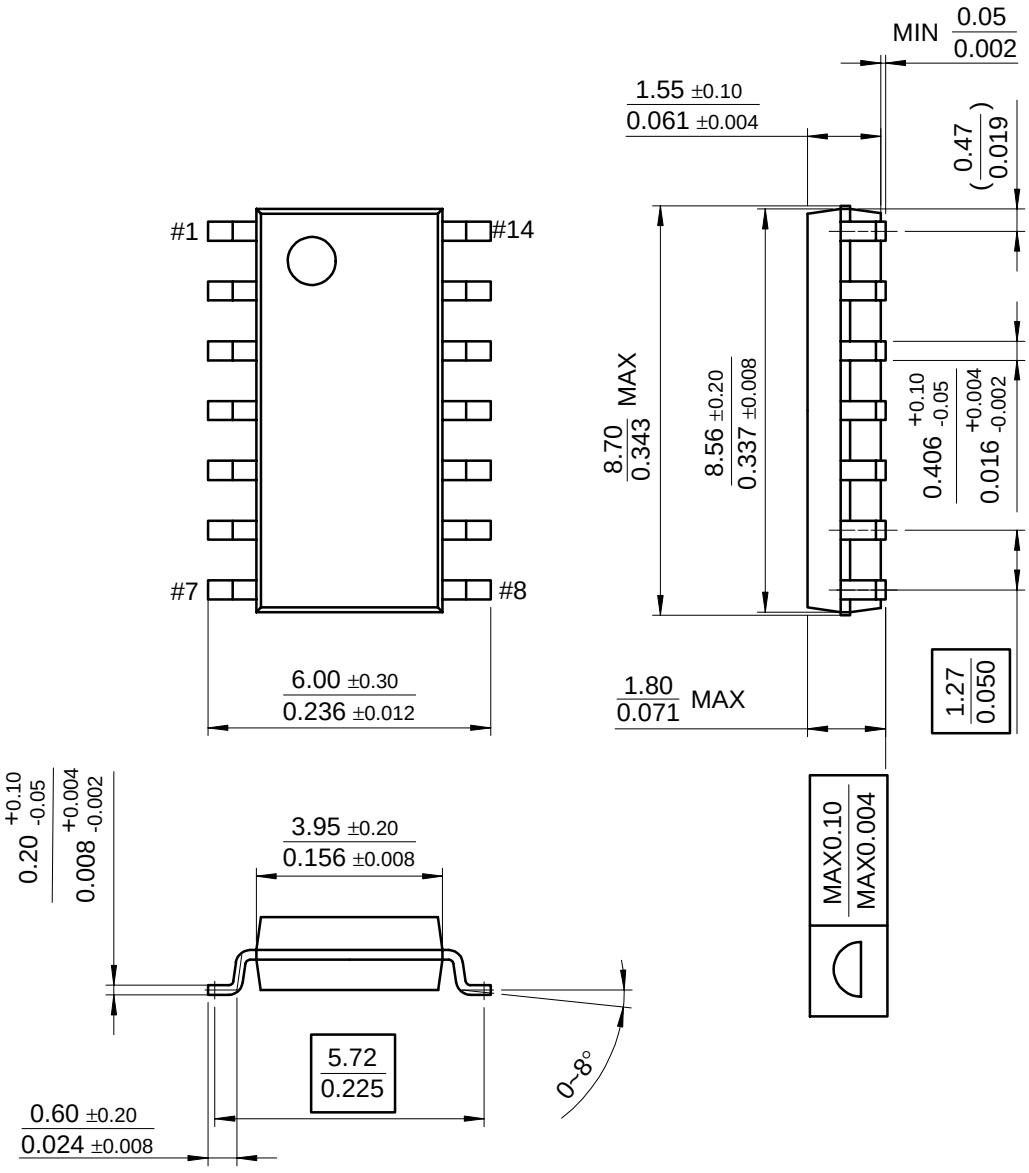

Ordering Information

Product Number	Package	Operating Temperature
UC3842N	8-DIP	0 ~ + 70°C
UC3843N		
UC3844N		
UC3845N		
UC3842D1	8-SOP	
UC3843D1		
UC3844D1		
UC3845D1		
UC3842D	14-SOP	
UC3843D		
UC3844D		
UC3845D		

DISCLAIMER

FAIRCHILD SEMICONDUCTOR RESERVES THE RIGHT TO MAKE CHANGES WITHOUT FURTHER NOTICE TO ANY PRODUCTS HEREIN TO IMPROVE RELIABILITY, FUNCTION OR DESIGN. FAIRCHILD DOES NOT ASSUME ANY LIABILITY ARISING OUT OF THE APPLICATION OR USE OF ANY PRODUCT OR CIRCUIT DESCRIBED HEREIN; NEITHER DOES IT CONVEY ANY LICENSE UNDER ITS PATENT RIGHTS, NOR THE RIGHTS OF OTHERS.

LIFE SUPPORT POLICY

FAIRCHILD'S PRODUCTS ARE NOT AUTHORIZED FOR USE AS CRITICAL COMPONENTS IN LIFE SUPPORT DEVICES OR SYSTEMS WITHOUT THE EXPRESS WRITTEN APPROVAL OF THE PRESIDENT OF FAIRCHILD SEMICONDUCTOR CORPORATION. As used herein:

1. Life support devices or systems are devices or systems which, (a) are intended for surgical implant into the body, or (b) support or sustain life, and (c) whose failure to perform when properly used in accordance with instructions for use provided in the labeling, can be reasonably expected to result in a significant injury of the user.
2. A critical component in any component of a life support device or system whose failure to perform can be reasonably expected to cause the failure of the life support device or system, or to affect its safety or effectiveness.

© 2002 Fairchild Semiconductor Corporation