ULP Series Pushbutton Switch



Applications / Markets


Audio / Visual


Consumer Electronics


Vending Machines


Kiosks


Instrumentation


Medical Equipment

RoHS

Specifications

Electrical Rating: Silver: .5A @ 25VDC
Gold: 0.1A Max @ 28VDC
Electrical Life: 200,000 Cycles
Contact Resistance: Silver: 50mΩ Max. initial
Gold: 100mΩ Max. initial
Insulation Resistance: 100 MΩ Min. @ 500VDC
Dielectric Strength: 1,000VAC
Operating/Storage Temperature: -40°C to 85°C
Travel: 2.20mm
Contact Arrangement: SPDT, DPDT
Actuation Force: SPDT: 200gf; DPDT: 300 gf
Panel Thickness: 0.75-3.0mm (panel mount version only)

Features & Benefits

- **Single pole or double pole functions**
- **Multiple color options including RGB color**
- **Multiple cap color and style options**
- **PC pin or solder lug termination**
- **Latching or momentary options**
- **Gold or silver contact material**

Part Number Configurator

Series	Circuit Options	Mechanical Configuration Options	Termination Options	Contact Material Options	Cap Style Options	Cap Color Options	LED #1 Options	LED #2 Options
☐☐☐	☐☐	☐☐	☐☐	☐	☐☐	☐☐☐	☐☐☐	☐☐☐
ULP	**12**- SPDT **22** - DPDT	**EE** - Latching **OA** - Momentary	**P1** - PC Pins **M1**- Solder Lug	**Q** - Silver **R** - Gold	**SS** - Square Sculptured **SF** - Square Flat **PM** - Panel Mount **LS** - Large Sculptured	**CL1** - Clear Lens / White Diffuser **OP1** - Black Opaque	**NIL** - No LED **BLU** - Blue **GRN** - Green **RED** - Red **YEL** - Yellow **RGB** - Red-Green-Blue	**NIL** - No LED **BLU** - Blue **GRN** - Green **RED** - Red **YEL** - Yellow

NOTES:
1) M1 Termination is only available with Panel Mount Cap Style
2) P1 Termination is not available with Panel Mount cap Style
3) OP1 Cap Color (black opaque) is not available with LEDs
4) When ordering RGB LED option, no designation is required for LED#2

Specifications subject to change without notice 6.27.2022

Actuator Options - Square Sculptured

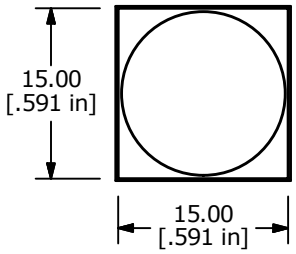

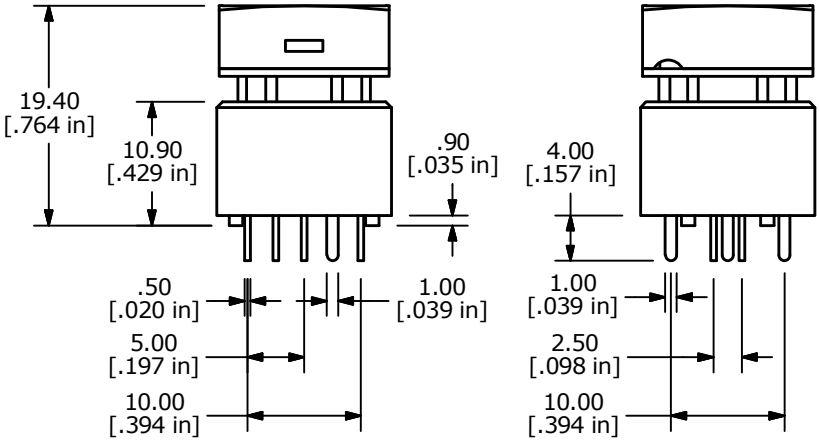

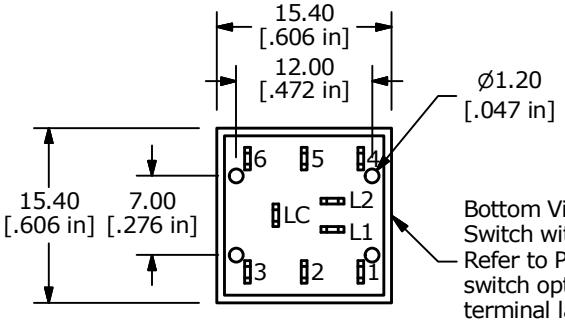

Bottom View is for a DPDT Switch with Dual LED option. Refer to PCB Layout for other switch options and correct terminal layout.

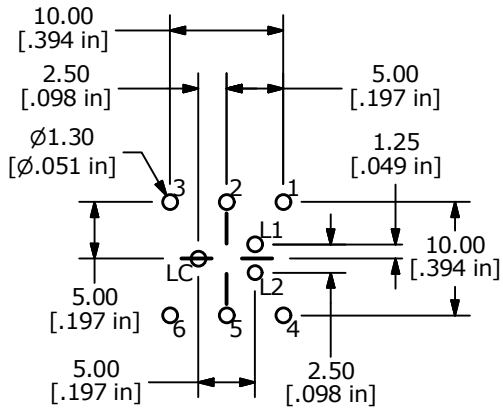

DPDT (ULP22) Layout is Shown
For SPDT (ULP11) holes 4, 5, & 6 are not required.
For Single LED option, hole L2 is not required
For No LED option, holes L1, L2, & LC are not required

PCB Layout - Dual LED

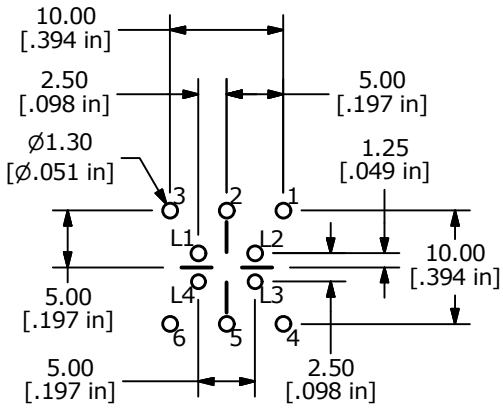

DPDT (ULP22) Layout is Shown
For SPDT (ULP11) holes 4, 5, & 6 are not required.

PCB Layout - RGB LED

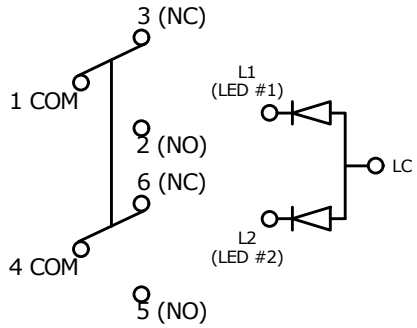

DPDT with Dual LED Circuit is shown
For SPDT the circuits 4, 5, & 6 are not included
For Single LED option, circuit LC-L2 is not included
For No LED option, circuits LC-L1 & LC-L2 are not included

Schematic - Dual LED

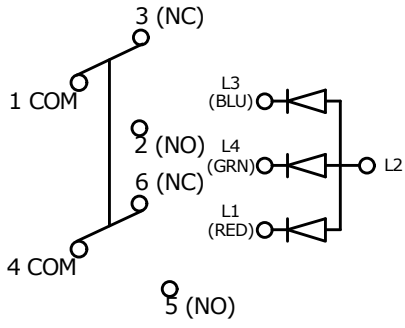

DPDT with RGB LED Circuit is shown
For SPDT the circuits 4, 5, & 6 are not included

Schematic - RGB LED

Actuator Options - Square Flat

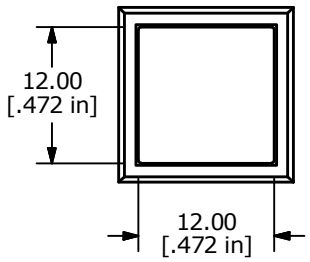

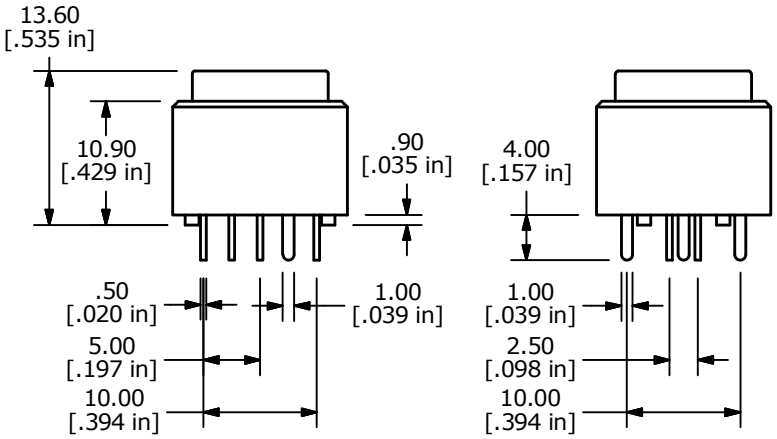

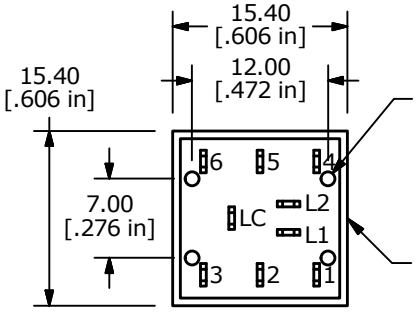

Bottom View is for a DPDT Switch with Dual LED option. Refer to PCB Layout for other switch options and correct terminal layout.

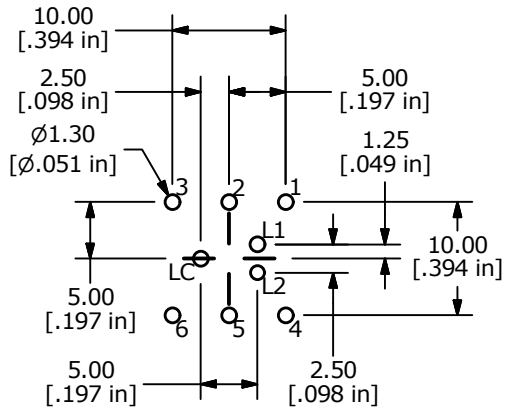

DPDT (ULP22) Layout is Shown
For SPDT (ULP11) holes 4, 5, & 6 are not required.
For Single LED option, hole L2 is not required
For No LED option, holes L1, L2, & LC are not required

PCB Layout - Dual LED

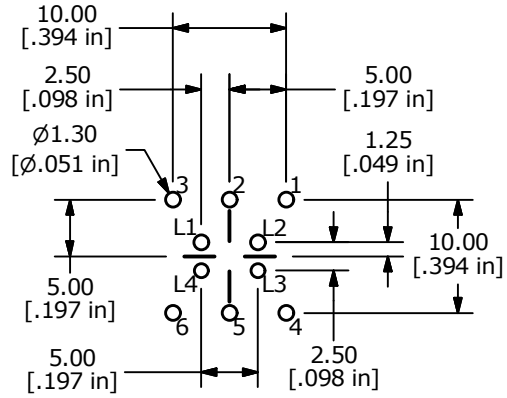

DPDT (ULP22) Layout is Shown
For SPDT (ULP11) holes 4, 5, & 6 are not required.

PCB Layout - RGB LED

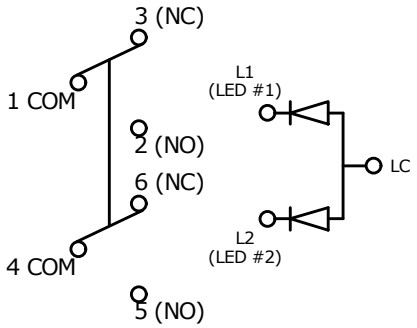

DPDT with Dual LED Circuit is shown
For SPDT the circuits 4, 5, & 6 is not included
For Single LED option, circuit LC-L2 are not included
For No LED option, circuits LC-L1 & LC-L2 are not included

Schematic - Dual LED

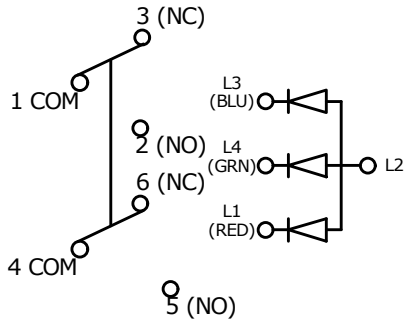

DPDT with RGB LED Circuit is shown
For SPDT the circuits 4, 5, & 6 are not included

Schematic - RGB LED

ACTUATOR OPTIONS - PANEL MOUNT

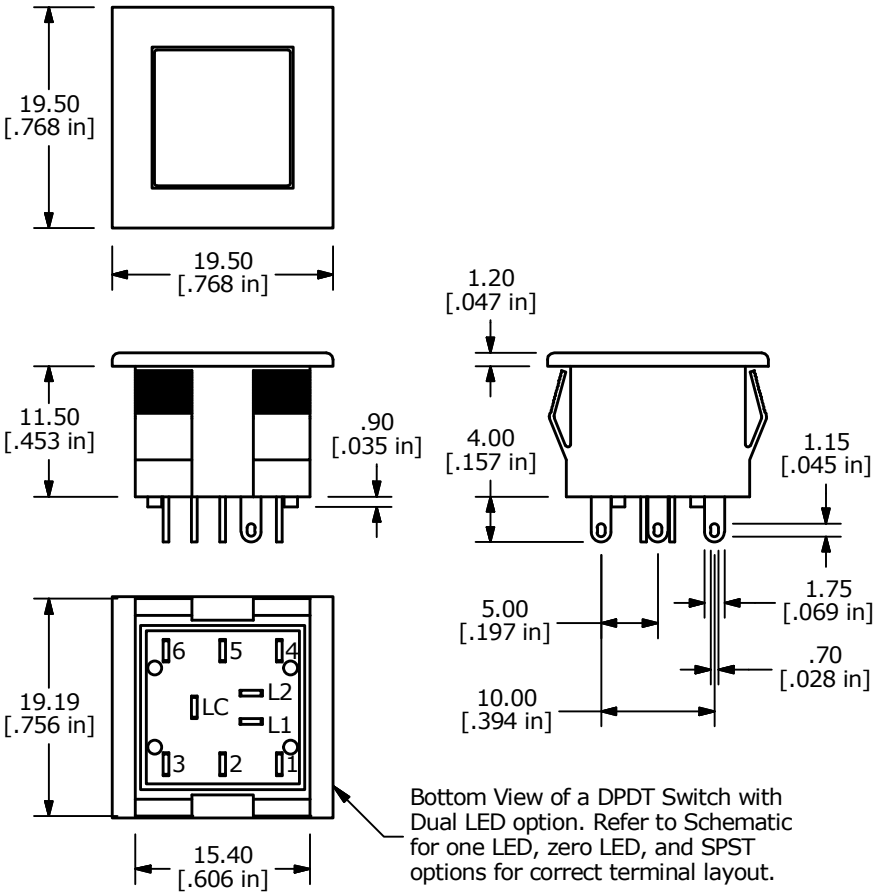

Bottom View of a DPDT Switch with Dual LED option. Refer to Schematic for one LED, zero LED, and SPST options for correct terminal layout.

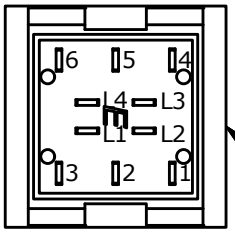

Bottom View of a DPDT Switch with RGB LED option. Refer to Schematic for SPST option and correct terminal layout.

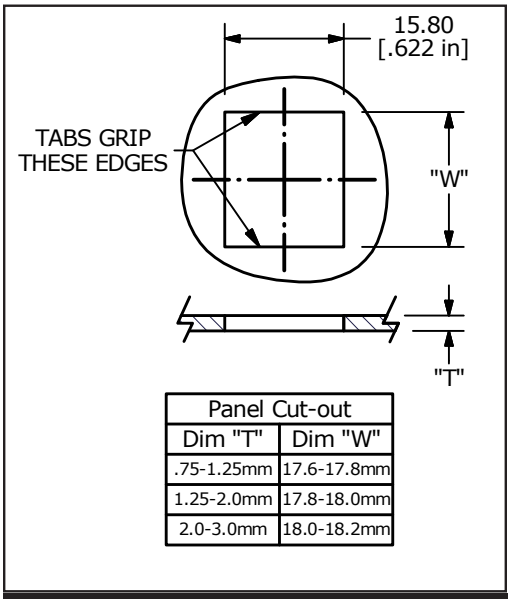

Panel Cut-out	
Dim "T"	Dim "W"
.75-1.25mm	17.6-17.8mm
1.25-2.0mm	17.8-18.0mm
2.0-3.0mm	18.0-18.2mm

RECOMMENDED PANEL CUTOUT

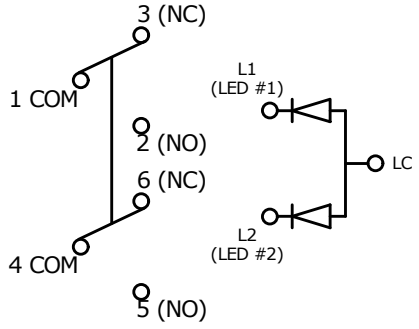

DPDT with Dual LED Circuit is shown
For SPDT the circuits 4, 5, & 6 are not included
For Single LED option, circuit LC-L2 is not included
For No LED option, circuits LC-L1 & LC-L2 are not included

SCHEMATIC - DUAL LED

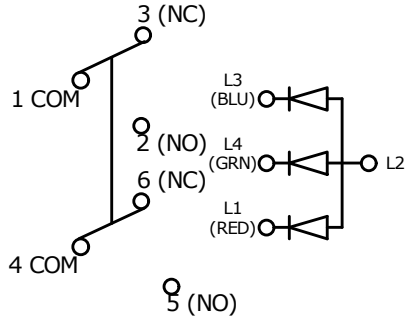

DPDT with RGB LED Circuit is shown
For SPDT the circuits 4, 5, & 6 are not included

SCHEMATIC - RGB LED

ACTUATOR OPTIONS - LARGE SCULPTURED

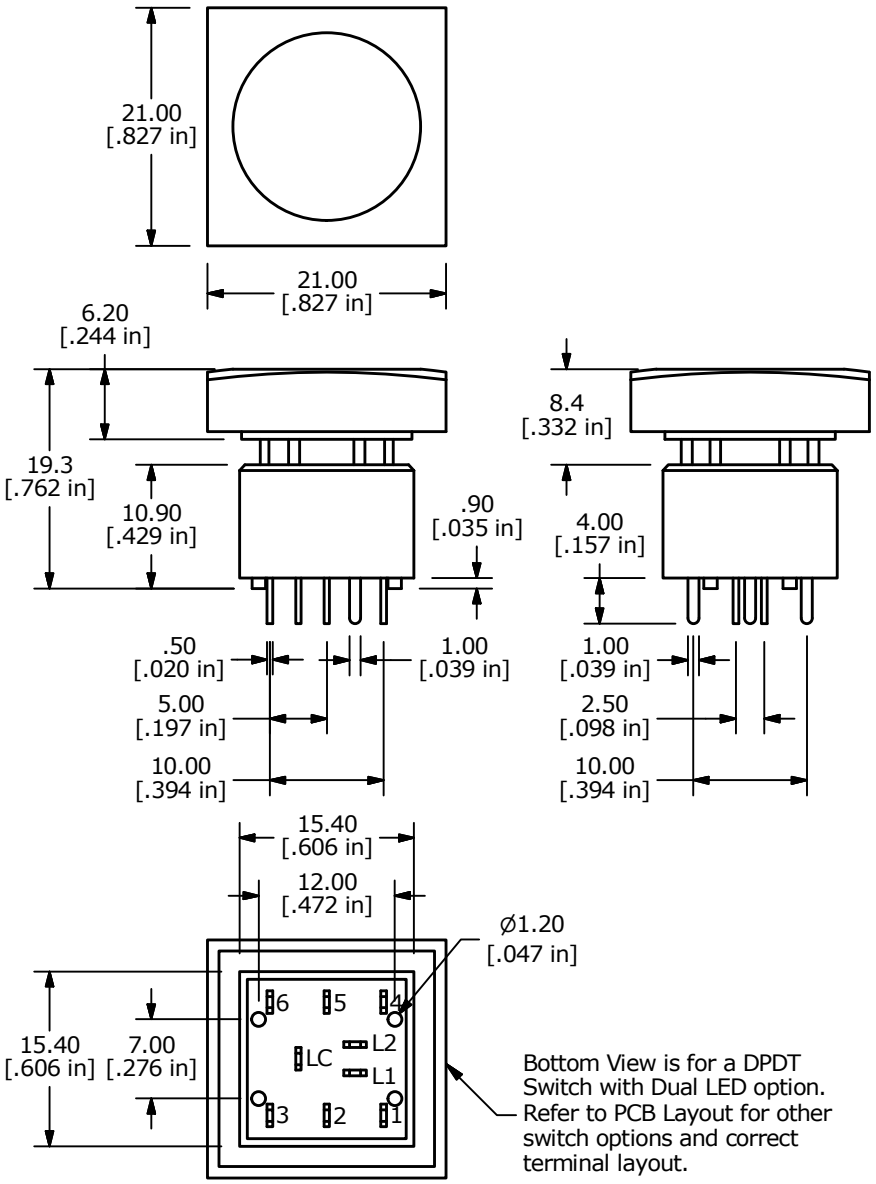

Bottom View is for a DPDT Switch with Dual LED option. Refer to PCB Layout for other switch options and correct terminal layout.

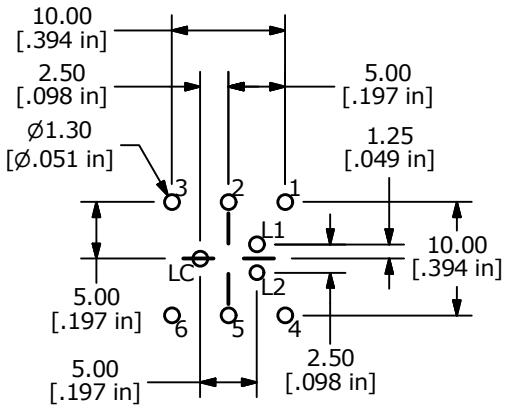

DPDT (ULP22) Layout is Shown
For SPDT (ULP11) holes 4, 5, & 6 are not required.
For Single LED option, hole L2 is not required
For No LED option, holes L1, L2, & LC are not required

PCB LAYOUT - DUAL LED

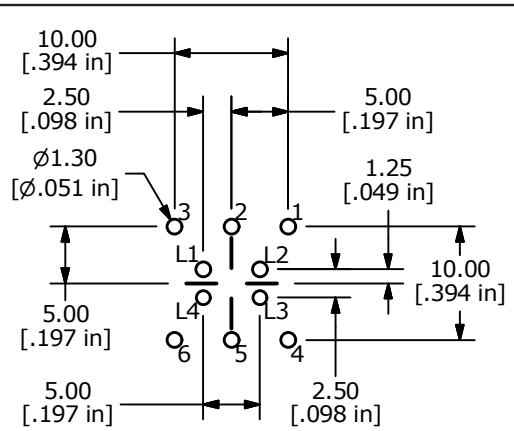

DPDT (ULP22) Layout is Shown
For SPDT (ULP11) holes 4, 5, & 6 are not required.

PCB LAYOUT - RGB LED

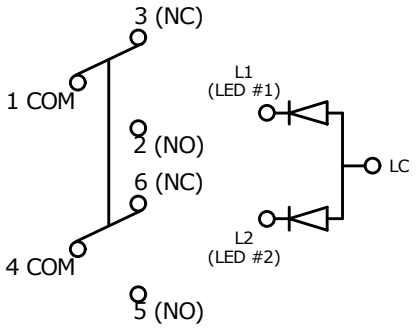

DPDT with Dual LED Circuit is shown
For SPDT the circuits 4, 5, & 6 are not included
For Single LED option, circuit LC-L2 is not included
For No LED option, circuits LC-L1 & LC-L2 are not included

SCHEMATIC - DUAL LED

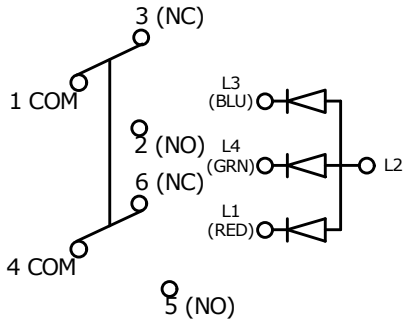

DPDT with RGB LED Circuit is shown
For SPDT the circuits 4, 5, & 6 are not included

SCHEMATIC - RGB LED