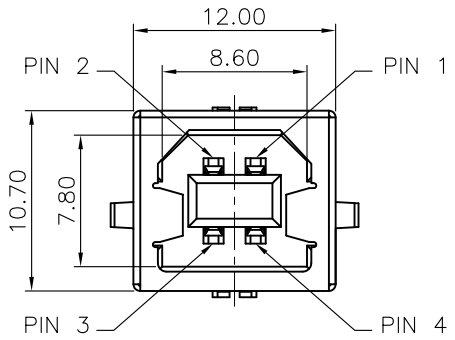

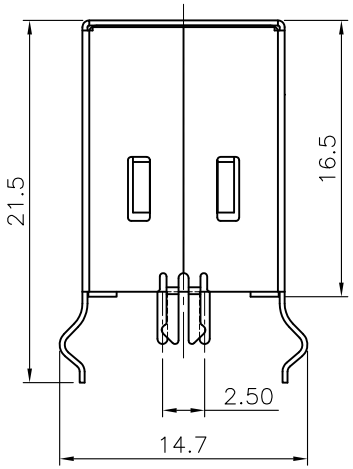

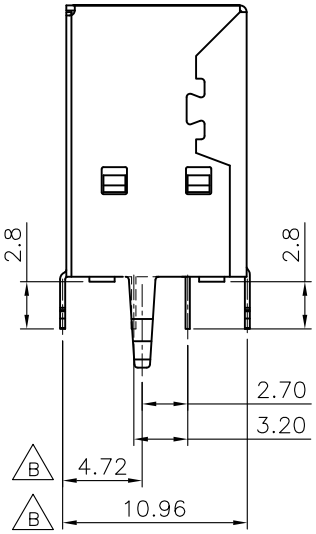

Specifications:
Current Rating:1.0A AC/DC
Voltage Rating:30V AC/DC
Contact Resistance:20m ohm.Max.
Insulation Resistance:1000M ohm.Min.
Withstanding Voltage:750V AC/Minute
Operating Temperature Range:−40°C To +105°C

Material and Finish:
Insulator:PBT (UL94V−0)
Contact:Copper Alloy
Plating:Gold Plated on Contact Area,Tin Plated on Solder Tail.
Shell:Copper Alloy,Nickel Plated

How To Order
USB−B1KSXX

- 6: Standard Selective Gold Plated
- 8: Gold Plated 30u"
- B: Black
- W: White

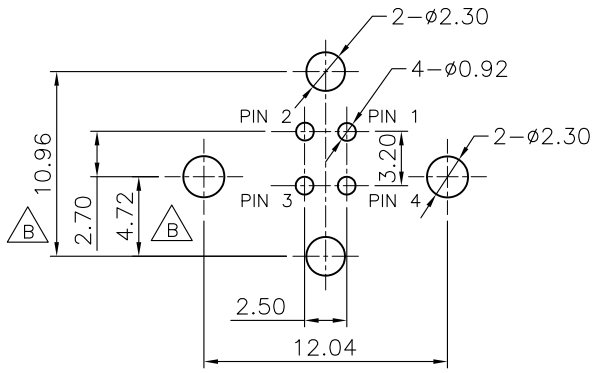

Recommended P.C.B Layout

RoHS Compliant

REV	DATE	FILE	BY
F			
E			
D			
C			
B	14−May−2022	B modify shell and pcb layout	Andrew
A	09−May−2022		Andrew

DRAWN: Andrew
CHECKED: Bill He
APPROVAL: Bill He

GENERAL TOLERANCE:
.X=±0.2
.XX=±0.15
.XXX=±0.10

UNIT: MM
SCALE: 1:1
SHEET: 1/1
PROJECTION:

ON−SHORE TECHNOLOGY, INC.

DESCRIPTION: USB B TYPE PCB FEMALE STRAIGHT

SIZE: A4

PART NO: USB−B1KSXX