USB7002

4-Port USB 3.2 Gen 1 SmartHub™ IC

Highlights

- 4-Port USB SmartHub™ IC with:
  - Native USB Type-C® support on upstream port
  - Native USB Type-C support on downstream ports 1 and 2
  - Two Standard USB 2.0 downstream ports
  - Internal Hub Feature Controller device which enables:
    - USB to I^2C/SPI/UART/I^2S/GPIO bridge endpoint support
    - USB to internal hub register write and read
- USB-IF Certified - TID 1212. Testing includes:
  - USB 3.2 Gen 1 Hub with BC1.2 support
  - Power Delivery 2.0 using UPD350 PD Transceiver (TID 330000077)
  - Billboard endpoint device for Alternate Mode negotiation status
  - Advanced multi-port system policy management
- USB Link Power Management (LPM) support
- USB-IF Battery Charger revision 1.2 support on downstream ports (DCP, CDP, SDP)
- Enhanced OEM configuration options available through either OTP or SPI ROM
- Commercial and industrial grade temperature support
- Automotive/AEC-Q100 qualified

Target Applications

- Standalone USB Hubs
- Laptop Docks
- PC Motherboards
- PC Monitor Docks
- Multi-function USB 3.2 Gen 1 Peripherals
- Automotive integrated head unit and breakout box

Key Benefits

- USB 3.2 Gen 1 compliant 5 Gbps, 480 Mbps, 12 Mbps, and 1.5Mbps operation
  - 5V tolerant USB 2.0 pins
  - 1.32V tolerant USB 3.2 Gen 1 pins
  - Integrated termination and pull-up/down resistors
- Native USB Type-C Support
  - Type-C CC Pin with integrated Rp and Rd
  - Integrated multiplexer on USB Type-C enabled ports. USB 3.2 Gen 1 PHYs are disabled until a valid Type-C attach is detected, saving idle power.
  - Control for external VCONN supply
- Supports battery charging of most popular battery powered devices on all ports
  - USB-IF Battery Charging rev. 1.2 support (DCP, CDP, SDP)
  - Apple® portable product charger emulation
  - Chinese YD/T 1591-2006 charger emulation
  - Chinese YD/T 1591-2009 charger emulation
  - European Union universal mobile charger support
  - Supports additional portable devices
- On-chip Microcontroller
  - Manages I/Os, VBUS, and other signals
- 64kB RAM, 256kB ROM
- 8kB One-Time-Programmable (OTP) ROM
  - Includes on-chip charge pump
- Configuration programming via OTP ROM, SPI ROM, or SMBus
- **FlexConnect**
  - The roles of the upstream and any downstream port are reversible on command
- **Multi-Host Endpoint Reflector**
  - Integrated host-controller endpoint reflector via CDC/NCM device class for automotive applications
- **USB Bridging**
  - USB to I^2C, SPI, UART, I^2S, and GPIO
- **PortSwap**
  - Configurable USB 2.0 differential pair signal swapping
- **PHYBoost**
  - Programmable USB 2.0 transceiver drive strength for recovering signal integrity
- **VariSense**
  - Programmable USB 2.0 receiver sensitivity
- Compatible with Microsoft Windows 10, 8, 7, XP, Apple OS X 10.4+, and Linux hub drivers
- Optimized for low-power operation and low thermal dissipation
- Package: 100-pin RoHS compliant VQFN (12mm x 12mm)

** USB Type-C® and USB-C® are trademarks of USB Implementers Forum.*

© 2018-2020 Microchip Technology Inc.

TO OUR VALUED CUSTOMERS

It is our intention to provide our valued customers with the best documentation possible to ensure successful use of your Microchip products. To this end, we will continue to improve our publications to better suit your needs. Our publications will be refined and enhanced as new volumes and updates are introduced.

If you have any questions or comments regarding this publication, please contact the Marketing Communications Department via E-mail at **docerrors@microchip.com** or fax the **Reader Response Form** in the back of this data sheet to (480) 792-4150. We welcome your feedback.

Most Current Data Sheet

To obtain the most up-to-date version of this data sheet, please register at our Worldwide Web site at:

http://www.microchip.com

You can determine the version of a data sheet by examining its literature number found on the bottom outside corner of any page. The last character of the literature number is the version number, (e.g., DS30000A is version A of document DS30000).

Errata

An errata sheet, describing minor operational differences from the data sheet and recommended workarounds, may exist for current devices. As device/documentation issues become known to us, we will publish an errata sheet. The errata will specify the revision of silicon and revision of document to which it applies.

To determine if an errata sheet exists for a particular device, please check with one of the following:

- Microchip's Worldwide Web site; **http://www.microchip.com**
- Your local Microchip sales office (see last page)

When contacting a sales office, please specify which device, revision of silicon and data sheet (include literature number) you are using.

Customer Notification System

Register on our web site at **www.microchip.com** to receive the most current information on all of our products.

© 2018-2020 Microchip Technology Inc.

Table of Contents

1.0 Preface 4
2.0 Introduction 6
3.0 Pin Descriptions and Configuration 8
4.0 Device Connections 22
5.0 Modes of Operation 25
6.0 Device Configuration 28
7.0 Device Interfaces 29
8.0 Functional Descriptions 33
9.0 Operational Characteristics 39
10.0 Package Outline 48
Appendix A: Data Sheet Revision History 51
Product Identification System 52
The Microchip Web Site 53
Customer Change Notification Service 53
Customer Support 53

1.0 PREFACE

1.1 General Terms

TABLE 1-1: GENERAL TERMS

Term	Description
ADC	Analog-to-Digital Converter
Byte	8 bits
CDC	Communication Device Class
CSR	Control and Status Registers
DFP	Downstream Facing Port
DWORD	32 bits
EOP	End of Packet
EP	Endpoint
FIFO	First In First Out buffer
FS	Full-Speed
FSM	Finite State Machine
GPIO	General Purpose I/O
HS	Hi-Speed
HSOS	High Speed Over Sampling
Hub Feature Controller	The Hub Feature Controller, sometimes called a Hub Controller for short is the internal processor used to enable the unique features of the USB Controller Hub. This is not to be confused with the USB Hub Controller that is used to communicate the hub status back to the Host during a USB session.
I^2C	Inter-Integrated Circuit
LS	Low-Speed
lsb	Least Significant Bit
LSB	Least Significant Byte
msb	Most Significant Bit
MSB	Most Significant Byte
N/A	Not Applicable
NC	No Connect
OTP	One Time Programmable
PCB	Printed Circuit Board
PCS	Physical Coding Sublayer
PHY	Physical Layer
PLL	Phase Lock Loop
RESERVED	Refers to a reserved bit field or address. Unless otherwise noted, reserved bits must always be zero for write operations. Unless otherwise noted, values are not guaranteed when reading reserved bits. Unless otherwise noted, do not read or write to reserved addresses.
SDK	Software Development Kit
SMBus	System Management Bus
UFP	Upstream Facing Port
UUID	Universally Unique IDentifier
WORD	16 bits

© 2018-2020 Microchip Technology Inc.

1.2 Buffer Types

TABLE 1-2: BUFFER TYPES

Buffer Type	Description
I	Input.
IS	Input with Schmitt trigger.
O12	Output buffer with 12 mA sink and 12 mA source.
OD12	Open-drain output with 12 mA sink
PU	50 µA (typical) internal pull-up. Unless otherwise noted in the pin description, internal pull-ups are always enabled. Internal pull-up resistors prevent unconnected inputs from floating. Do not rely on internal resistors to drive signals external to the device. When connected to a load that must be pulled high, an external resistor must be added.
PD	50 µA (typical) internal pull-down. Unless otherwise noted in the pin description, internal pull-downs are always enabled. Internal pull-down resistors prevent unconnected inputs from floating. Do not rely on internal resistors to drive signals external to the device. When connected to a load that must be pulled low, an external resistor must be added.
ICLK	Crystal oscillator input pin
OCLK	Crystal oscillator output pin
I/O-U	Analog input/output defined in USB specification.
I-R	RBIAS.
A	Analog.
P	Power pin.

1.3 Reference Documents

1. *Universal Serial Bus Revision 3.2 Specification*, http://www.usb.org
2. *Battery Charging Specification*, Revision 1.2, Dec. 07, 2010, http://www.usb.org
3. *I^2C-Bus Specification*, Version 1.1, http://www.nxp.com/documents/user_manual/UM10204.pdf
4. *I^2S-Bus Specification*, http://www.nxp.com/acrobat_download/various/I2SBUS.pdf
5. *System Management Bus Specification*, Version 1.0, http://smbus.org/specs

Note: Additional USB7002 resources can be found on the Microchip USB7002 product page at www.microchip.com/USB7002.

2.0 INTRODUCTION

2.1 General Description

The Microchip USB7002 hub is low-power, OEM configurable, USB 3.2 Gen 1 hub controller with 4 downstream ports and advanced features for embedded USB applications. The USB7002 is fully compliant with the Universal Serial Bus Revision 3.2 Specification and USB 2.0 Link Power Management Addendum. The USB7002 supports 5 Gbps SuperSpeed (SS), 480 Mbps Hi-Speed (HS), 12 Mbps Full-Speed (FS), and 1.5 Mbps Low-Speed (LS) USB downstream devices on two standard USB 3.2 Gen 1 downstream ports and only legacy speeds (HS/FS/LS) on two standard USB 2.0 downstream ports.

The USB7002 supports native Type-C connectivity on the upstream port and two of the downstream ports. The hub includes internal Type-C CC pin logic and an internal USB 3.2 Gen 1 multiplexer to support both Type-C insertion orientations.

The USB7002 supports the legacy USB speeds (HS/FS/LS) through a dedicated USB 2.0 hub controller that is the culmination of six generations of Microchip hub feature controller design and experience with proven reliability, interoperability, and device compatibility. The SuperSpeed hub controller operates in parallel with the USB 2.0 controller, decoupling the 5 Gbps SS data transfers from bottlenecks due to the slower USB 2.0 traffic.

The USB7002 enables OEMs to configure their system using “Configuration Straps.” These straps simplify the configuration process assigning default values to USB 3.2 Gen 1 ports and GPIOs. OEMs can disable ports, enable battery charging and define GPIO functions as default assignments on power up.

The USB7002 supports downstream battery charging. The USB7002 integrated battery charger detection circuitry supports the USB-IF Battery Charging (BC1.2) detection method and most Apple devices. The USB7002 provides the battery charging handshake and supports the following USB-IF BC1.2 charging profiles:

• DCP: Dedicated Charging Port (Power brick with no data)

• CDP: Charging Downstream Port (1.5A with data)

• SDP: Standard Downstream Port (0.5A with data)

• Custom profiles loaded via SPI EEPROM or OTP

Additionally, the USB7002 includes many powerful and unique features such as:

The Hub Feature Controller, an internal USB device dedicated for use as a USB to I^2C/UART/SPI/GPIO interface that allows external circuits or devices to be monitored, controlled, or configured via the USB interface.

Multi-Host Endpoint Reflector, which provides unique USB functionality whereby USB data can be “mirrored” between two USB hosts (Multi-Host) in order to perform a single USB transaction.This capability is fully covered by Microchip intellectual property (U.S. Pat. Nos. 7,523,243 and 7,627,708) and is instrumental in enabling Apple CarPlay™, where the Apple iPhone® becomes a USB Host.

FlexConnect, which provides flexible connectivity options. Any one of the USB7002’s downstream ports can be reconfigured to become the upstream port, allowing master capable devices to control other devices on the hub.

AEC-Q100 compliance:, which tailors the device for use in automotive applications requiring automotive grade robustness, starting with the comprehension of proprietary design for reliability techniques within the silicon IC itself, as well as for the package design.

- Automotive qualified technologies and processes are used to fabricate the products with enhanced monitors to continuously drive improvements in accordance with Microchip's zero-dpm methodology.
- Product qualification is focused on customer expectations and exceeds many of the automotive reliability standards including AEC-Q100.
- Microchip automotive services are provided during the life of the product from a dedicated organization of operations, quality, and product support personnel specialized in meeting the requirements of the automotive customer.

PortSwap, which adds per-port programmability to USB differential-pair pin locations. PortSwap allows direct alignment of USB signals (D+/D-) to connectors to avoid uneven trace length or crossing of the USB differential signals on the PCB.

PHYBoost, which provides programmable levels of Hi-Speed USB signal drive strength in the downstream port transceivers. PHYBoost attempts to restore USB signal integrity in a compromised system environment. The graphic on the right shows an example of Hi-Speed USB eye diagrams before and after PHYBoost signal integrity restoration. in a compromised system environment.

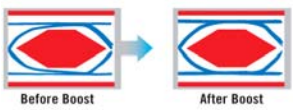

© 2018-2020 Microchip Technology Inc.

VariSense, which controls the Hi-Speed USB receiver sensitivity enabling programmable levels of USB signal receive sensitivity. This capability allows operation in a sub-optimal system environment, such as when a captive USB cable is used.

The USB7002 can be configured for operation through internal default settings. Custom OEM configurations are supported through external SPI ROM or internal OTP ROM. All port control signal pins are under firmware control in order to allow for maximum operational flexibility and are available as GPIOs for customer specific use.

The USB7002 is available in commercial (0°C to +70°C) and industrial (-40°C to +85°C) temperature ranges. An internal block diagram of the USB7002 in an upstream Type-C application is shown in Figure 2-1.

FIGURE 2-1: USB7002 INTERNAL BLOCK DIAGRAM - UPSTREAM TYPE-C APPLICATION

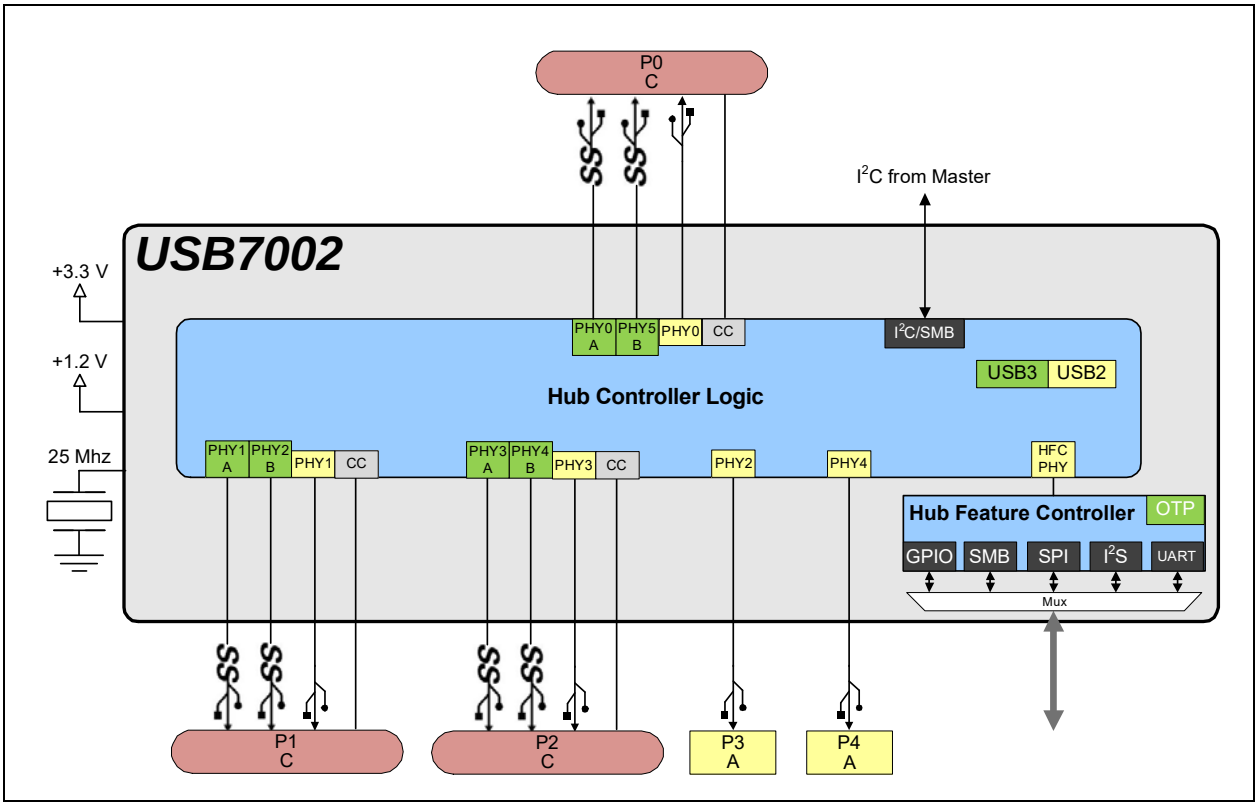

3.0 PIN DESCRIPTIONS AND CONFIGURATION

The pin assignments for the USB7002 are detailed in Section 3.1, Pin Assignments. Pin descriptions are provided in Section 3.2, Pin Descriptions.

3.1 Pin Assignments

The device pin diagram for the USB7002 can be seen in Figure 3-1. Table 3-1 provides a USB7002 pin assignments table. Pin descriptions are provided in Section 3.2, Pin Descriptions.

FIGURE 3-1: USB7002 100-VQFN PIN ASSIGNMENTS

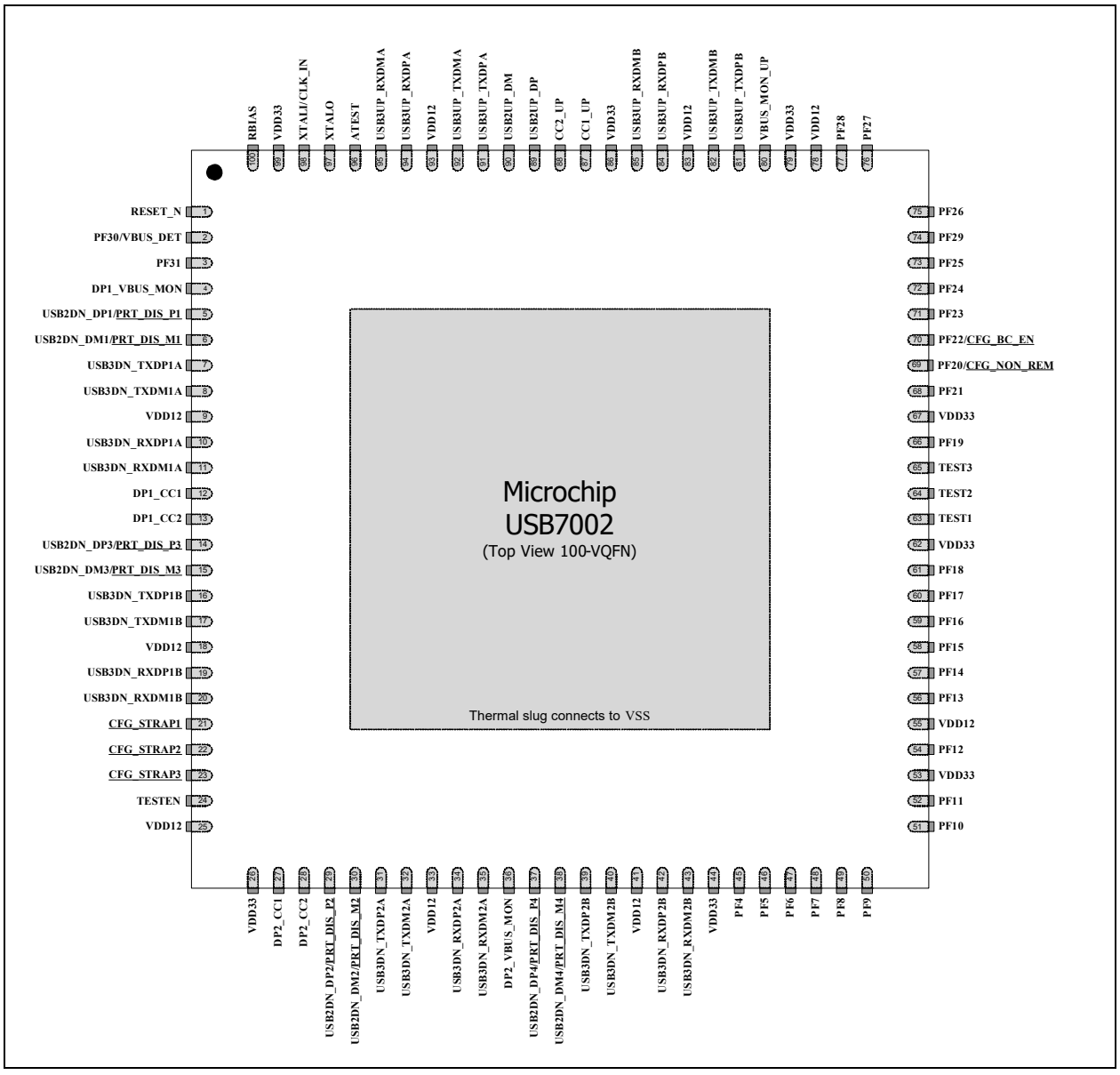

Note:	Configuration straps are identified by an underlined symbol name. Signals that function as configuration straps must be augmented with an external resistor when connected to a load.

© 2018-2020 Microchip Technology Inc.

Pin Num	Pin Name	Reset	Pin Num	Pin Name	Reset
1	**RESET_N**	Z	51	**PF10**	PD
2	**PF30/VBUS_DET**	Z	52	**PF11**	PD
3	**PF31**	Z	53	**VDD33**	Z
4	**DP1_VBUS_MON**	AI	54	**PF12**	PD
5	**USB2DN_DP1/PRT_DIS_P1**	AIO PD	55	**VDD12**	Z
6	**USB2DN_DM1/PRT_DIS_M1**	AIO PD	56	**PF13**	PD
7	**USB3DN_TXDP1A**	AO PD	57	**PF14**	PD
8	**USB3DN_TXDM1A**	AO PD	58	**PF15**	PD
9	**VDD12**	Z	59	**PF16**	PD
10	**USB3DN_RXDP1A**	AI PD	60	**PF17**	PD
11	**USB3DN_RXDM1A**	AI PD	61	**PF18**	Z
12	**DP1_CC1**	AI	62	**VDD33**	Z
13	**DP1_CC2**	AI	63	**TEST1**	Z
14	**USB2DN_DP3/PRT_DIS_P3**	AIO PD	64	**TEST2**	Z
15	**USB2DN_DM3/PRT_DIS_M3**	AIO PD	65	**TEST3**	Z
16	**USB3DN_TXDP1B**	AO PD	66	**PF19**	Z
17	**USB3DN_TXDM1B**	AO PD	67	**VDD33**	Z
18	**VDD12**	Z	68	**PF21**	Z
19	**USB3DN_RXDP1B**	AI PD	69	**PF20/CFG_NON_REM**	PU
20	**USB3DN_RXDM1B**	AI PD	70	**PF22/CFG_BC_EN**	Z
21	**CFG_STRAP1**	Z	71	**PF23**	Z
22	**CFG_STRAP2**	Z	72	**PF24**	Z
23	**CFG_STRAP3**	Z	73	**PF25**	Z
24	**TESTEN**	Z	74	**PF29**	Z
25	**VDD12**	Z	75	**PF26**	Z
26	**VDD33**	Z	76	**PF27**	Z
27	**DP2_CC1**	AI	77	**PF28**	Z
28	**DP2_CC2**	AI	78	**VDD12**	Z
29	**USB2DN_DP2/PRT_DIS_P2**	AIO PD	79	**VDD33**	Z
30	**USB2DN_DM2/PRT_DIS_M2**	AIO PD	80	**VBUS_MON_UP**	AI
31	**USB3DN_TXDP2A**	AO PD	81	**USB3UP_TXDPB**	AIO PD
32	**USB3DN_TXDM2A**	AO PD	82	**USB3UP_TXDMB**	AIO PD
33	**VDD12**	Z	83	**VDD12**	AO PD
34	**USB3DN_RXDP2A**	AI PD	84	**USB3UP_RXDPB**	AO PD
35	**USB3DN_RXDM2A**	AI PD	85	**USB3UP_RXDMB**	Z
36	**DP2_VBUS_MON**	AI	86	**VDD33**	AI PD
37	**USB2DN_DP4/PRT_DIS_P4**	AO PD	87	**CC1_UP**	AI PD
38	**USB2DN_DM4/PRT_DIS_M4**	AO PD	88	**CC2_UP**	Z
39	**USB3DN_TXDP2B**	Z	89	**USB2UP_DP**	AIO Z
40	**USB3DN_TXDM2B**	AI PD	90	**USB2UP_DM**	AIO Z
41	**VDD12**	AI PD	91	**USB3UP_TXDPA**	AO PD
42	**USB3DN_RXDP2B**	Z	92	**USB3UP_TXDMA**	AO PD
43	**USB3DN_RXDM2B**	Z	93	**VDD12**	Z
44	**VDD33**	Z	94	**USB3UP_RXDPA**	AI PD
45	**PF4**	Z	95	**USB3UP_RXDMA**	AI PD
46	**PF5**	Z	96	**ATEST**	AO
47	**PF6**	Z	97	**XTALO**	AO
48	**PF7**	Z	98	**XTALI/CLK_IN**	AI
49	**PF8**	Z	99	**VDD33**	Z
50	**PF9**	Z	100	**RBIAS**	AI
Exposed Pad (VSS) must be connected to ground.					

3.2 Pin Descriptions

This section contains descriptions of the various USB7002 pins. The "_N" symbol in the signal name indicates that the active, or asserted, state occurs when the signal is at a low voltage level. For example, **RESET_N** indicates that the reset signal is active low. When "_N" is not present after the signal name, the signal is asserted when at the high voltage level.

The terms assertion and negation are used exclusively. This is done to avoid confusion when working with a mixture of "active low" and "active high" signal. The term assert, or assertion, indicates that a signal is active, independent of whether that level is represented by a high or low voltage. The term negate, or negation, indicates that a signal is inactive.

Buffer type definitions are detailed in Section 1.2, Buffer Types.

TABLE 3-1: PIN DESCRIPTIONS

Name	Symbol	Buffer Type	Description
USB 3.2 Gen 1 Interfaces			
Upstream USB 3.2 Gen 1 TX D+ Orientation A	USB3UP_TXDPA	I/O-U	Upstream USB Type-C® "Orientation A" USB 3.2 Gen 1 Transmit Data Plus.
Upstream USB 3.2 Gen 1 TX D- Orientation A	USB3UP_TXDMA	I/O-U	Upstream USB Type-C "Orientation A" USB 3.2 Gen 1 Transmit Data Minus.
Upstream USB 3.2 Gen 1 RX D+ Orientation A	USB3UP_RXDPA	I/O-U	Upstream USB Type-C "Orientation A" USB 3.2 Gen 1 Receive Data Plus.
Upstream USB 3.2 Gen 1 RX D- Orientation A	USB3UP_RXDMA	I/O-U	Upstream USB Type-C "Orientation A" USB 3.2 Gen 1 Receive Data Minus.
Upstream USB 3.2 Gen 1 TX D+ Orientation B	USB3UP_TXDPB	I/O-U	Upstream USB Type-C "Orientation B" USB 3.2 Gen 1 Transmit Data Plus.
Upstream USB 3.2 Gen 1 TX D- Orientation B	USB3UP_TXDMB	I/O-U	Upstream USB Type-C "Orientation B" USB 3.2 Gen 1 Transmit Data Minus.
Upstream USB 3.2 Gen 1 RX D+ Orientation B	USB3UP_RXDPB	I/O-U	Upstream USB Type-C "Orientation B" USB 3.2 Gen 1 Receive Data Plus.
Upstream USB 3.2 Gen 1 RX D- Orientation B	USB3UP_RXDMB	I/O-U	Upstream USB Type-C "Orientation B" USB 3.2 Gen 1 Receive Data Minus.
Downstream Port 1 USB 3.2 Gen 1 TX D+ Orientation A	USB3DN_TXDP1A	I/O-U	Downstream USB Type-C "Orientation A" Super Speed Transmit Data Plus, port 1.
Downstream Port 1 USB 3.2 Gen 1 TX D- Orientation A	USB3DN_TXDM1A	I/O-U	Downstream USB Type-C "Orientation A" Super Speed Transmit Data Minus, port 1.

© 2018-2020 Microchip Technology Inc.

TABLE 3-1: PIN DESCRIPTIONS (CONTINUED)

Name	Symbol	Buffer Type	Description
Downstream Port 1 USB 3.2 Gen 1 RX D+ Orientation A	USB3DN_RXDP1A	I/O-U	Downstream USB Type-C “Orientation A” Super Speed Receive Data Plus, port 1.
Downstream Port 1 USB 3.2 Gen 1 RX D- Orientation A	USB3DN_RXDM1A	I/O-U	Downstream USB Type-C “Orientation A” Super Speed Receive Data Minus, port 1.
Downstream Port 1 USB 3.2 Gen 1 TX D+ Orientation B	USB3DN_TXDP1B	I/O-U	Downstream USB Type-C “Orientation B” Super Speed Transmit Data Plus, port 1.
Downstream Port 1 USB 3.2 Gen 1 TX D- Orientation B	USB3DN_TXDM1B	I/O-U	Downstream USB Type-C “Orientation B” Super Speed Transmit Data Minus, port 1.
Downstream Port 1 USB 3.2 Gen 1 RX D+ Orientation B	USB3DN_RXDP1B	I/O-U	Downstream USB Type-C “Orientation B” Super Speed Receive Data Plus, port 1.
Downstream Port 1 USB 3.2 Gen 1 RX D- Orientation B	USB3DN_RXDM1B	I/O-U	Downstream USB Type-C “Orientation B” Super Speed Receive Data Minus, port 1.
Downstream Port 2 USB 3.2 Gen 1 TX D+ Orientation A	USB3DN_TXDP2A	I/O-U	Downstream USB Type-C “Orientation A” Super Speed Transmit Data Plus, port 2.
Downstream Port 2 USB 3.2 Gen 1 TX D- Orientation A	USB3DN_TXDM2A	I/O-U	Downstream USB Type-C “Orientation A” Super Speed Transmit Data Minus, port 2.
Downstream Port 2 USB 3.2 Gen 1 RX D+ Orientation A	USB3DN_RXDP2A	I/O-U	Downstream USB Type-C “Orientation A” Super Speed Receive Data Plus, port 2.
Downstream Port 2 USB 3.2 Gen 1 RX D- Orientation A	USB3DN_RXDM2A	I/O-U	Downstream USB Type-C “Orientation A” Super Speed Receive Data Minus, port 2.
Downstream Port 2 USB 3.2 Gen 1 TX D+ Orientation B	USB3DN_TXDP2B	I/O-U	Downstream USB Type-C “Orientation B” Super Speed Transmit Data Plus, port 2.

TABLE 3-1: PIN DESCRIPTIONS (CONTINUED)

Name	Symbol	Buffer Type	Description
Downstream Port 2 USB 3.2 Gen 1 TX D- Orientation B	USB3DN_TXDM2B	I/O-U	Downstream USB Type-C “Orientation B” Super Speed Transmit Data Minus, port 2.
Downstream Port 2 USB 3.2 Gen 1 RX D+ Orientation B	USB3DN_RXDP2B	I/O-U	Downstream USB Type-C “Orientation B” Super Speed Receive Data Plus, port 2.
Downstream Port 2 USB 3.2 Gen 1 RX D- Orientation B	USB3DN_RXDM2B	I/O-U	Downstream USB Type-C “Orientation B” Super Speed Receive Data Minus, port 2.
USB 2.0 Interfaces			
Upstream USB 2.0 D+	USB2UP_DP	I/O-U	Upstream USB 2.0 Data Plus (D+).
Upstream USB 2.0 D-	USB2UP_DM	I/O-U	Upstream USB 2.0 Data Minus (D-).
Downstream Ports 1-4 USB 2.0 D+	USB2DN_DP[1:4]	I/O-U	Downstream USB 2.0 Ports 1-4 Data Plus (D+).
Downstream Ports 1-4 USB 2.0 D-	USB2DN_DM[1:4]	I/O-U	Downstream USB 2.0 Ports 1-4 Data Minus (D-)
VBUS Detect	VBUS_DET	IS	This signal detects the state of the upstream bus power in legacy Type-B upstream implementations. When designing a detachable hub, this pin must be connected to the VBUS power pin of the upstream USB port through a resistor divider (50 kΩ by 100 kΩ) to provide 3.3 V. For self-powered applications with a permanently attached host, this pin must be connected to either 3.3 V or 5.0 V through a resistor divider to provide 3.3 V. In embedded applications, **VBUS_DET** may be controlled (toggled) when the host desires to renegotiate a connection without requiring a full reset of the device.
USB Type-C Connector Control			
Downstream Port 1 Type-C Voltage Monitor	DP1_VBUS_MON	I/O12	Used to detect Type-C VBUS vSafe5V and vSafe0V states on Port 1. A potential divider is needed for this pin (44.2 kΩ to 49.9 kΩ , ±1.0%).
Downstream Port 1 Type-C CC1	DP1_CC1	I/O12	Used for Type-C attach and orientation detection on Port 1. Includes configurable Rp/Ra selection. Connect this pin directly to the CC1 pin of the respective Type-C connector.

© 2018-2020 Microchip Technology Inc.

TABLE 3-1: PIN DESCRIPTIONS (CONTINUED)

Name	Symbol	Buffer Type	Description
Downstream Port 1 Type-C CC2	DP1_CC2	I/O12	Used for Type-C attach and orientation detection on Port 1. Includes configurable Rp/Ra selection. Connect this pin directly to the CC2 pin of the respective Type-C connector.
Downstream Port 2 Type-C Voltage Monitor	DP2_VBUS_MON	I/O12	Used for detect Type-C VBUS vSafe5V and vSafe0V states on Port 2. A potential divider is needed for this pin (44.2 kΩ to 49.9 kΩ , ±1.0%).
Downstream Port 2 Type-C CC1	DP2_CC1	I/O12	Used for Type-C attach and orientation detection on Port 2. Includes configurable Rp/Ra selection. Connect this pin directly to the CC1 pin of the respective Type-C connector.
Downstream Port 2 Type-C CC2	DP2_CC2	I/O12	Used for Type-C attach and orientation detection on Port 2. Includes configurable Rp/Ra selection. Connect this pin directly to the CC2 pin of the respective Type-C connector.
Upstream Type-C CC1	CC1_UP	I/O12	Used for Type-C attach and orientation detection. Includes configurable Rp/Ra selection.
Upstream Type-C CC2	CC2_UP	I/O12	Used for Type-C attach and orientation detection. Includes configurable Rp/Ra selection.
Upstream Type-C Voltage Monitor	VBUS_MON_UP	I/O12	Used to detect Type-C VBUS vSafe5V and vSafe0V states on the upstream port. A potential divider is needed for this pin (44.2 kΩ to 49.9 kΩ , ±1.0%).
Miscellaneous			
Programmable Function Pins	PF[31:4]	I/O12	Programmable function pins. Refer to Section 3.3, Configuration Straps and Programmable Functions for details.
Reset Input	RESET_N	IS	This active low signal is used by the system to reset the device.
Bias Resistor	RBIAS	I-R	A 12.0 kΩ ±1.0% resistor is attached from ground to this pin to set the transceiver's internal bias settings. Place the resistor as close the device as possible with a dedicated, low impedance connection to the ground plane.
Test 1	TEST1	A	Test 1 pin. This signal is used for test purposes and must always be pulled-up to 3.3V via a 4.7 kΩ resistor.
Test 2	TEST2	A	Test 2 pin. This signal is used for test purposes and must always be pulled-down to ground via a 4.7 kΩ resistor.
Test 3	TEST3	A	Test 3 pin. This signal is used for test purposes and must always be pulled-down to ground via a 4.7 kΩ resistor.

© 2018-2020 Microchip Technology Inc.

TABLE 3-1: PIN DESCRIPTIONS (CONTINUED)

Name	Symbol	Buffer Type	Description
Test	TESTEN	I/O12	Test pin. This signal is used for test purposes and must always be connected to ground.
Analog Test	ATEST	A	Analog test pin. This signal is used for test purposes and must either be left unconnected or tied to ground.
External 25 MHz Crystal Input	XTALI	ICLK	External 25 MHz crystal input
External 25 MHz Reference Clock Input	CLKIN	ICLK	External reference clock input. The device may alternatively be driven by a single-ended clock oscillator. When this method is used, **XTALO** should be left unconnected.
External 25 MHz Crystal Output	XTALO	OCLK	External 25 MHz crystal output
Configuration Straps			
Port 4-1 D+ Disable Configuration Strap	PRT_DIS_P[4:1]	I	Port 4-1 D+ Disable Configuration Strap. These configuration straps are used in conjunction with the corresponding **PRT_DIS_M[4:1]** straps to disable the related port (4-1). See Note 3-1. Both USB data pins for the corresponding port must be tied to 3.3V to disable the associated downstream port.
Port 4-1 D- Disable Configuration Strap	PRT_DIS_M[4:1]	I	Port 4-1 D- Disable Configuration Strap. These configuration straps are used in conjunction with the corresponding **PRT_DIS_P[4:1]** straps to disable the related port (4-1). See Note 3-1. Both USB data pins for the corresponding port must be tied to 3.3V to disable the associated downstream port.
Non-Removable Ports Configuration Strap	CFG_NON_REM	I	Non-Removable Ports Configuration Strap. This configuration strap controls the number of reported non-removable ports. See Note 3-1.
Battery Charging Configuration Strap	CFG_BC_EN	I/O12	Battery Charging Configuration Strap. This configuration strap controls the number of BC 1.2 enabled downstream ports. See Note 3-1.
Device Mode Configuration Straps 3-1	CFG_STRAP[3:1]	I	Device Mode Configuration Straps 3-1. These configuration straps are used to select the device's mode of operation. See Note 3-1.

© 2018-2020 Microchip Technology Inc.

TABLE 3-1: PIN DESCRIPTIONS (CONTINUED)

Name	Symbol	Buffer Type	Description
Power/Ground			
+3.3V I/O Power Supply Input	VDD33	P	+3.3 V power and internal regulator input.
+1.2V Core Power Supply Input	VDD12	P	+1.2 V digital core power supply input.
Ground	VSS	P	Common ground. This exposed pad must be connected to the ground plane with a via array.

Note 3-1 Configuration strap values are latched on Power-On Reset (POR) and the rising edge of **RESET_N** (external chip reset). Configuration straps are identified by an underlined symbol name. Signals that function as configuration straps must be augmented with an external resistor when connected to a load. For additional information, refer to Section 3.3, Configuration Straps and Programmable Functions.

3.3 Configuration Straps and Programmable Functions

Configuration straps are multi-function pins that are used during Power-On Reset (POR) or external chip reset (**RESET_N**) to determine the default configuration of a particular feature. The state of the signal is latched following deassertion of the reset. Configuration straps are identified by an underlined symbol name. This section details the various device configuration straps and associated programmable pin functions.

Note: The system designer must ensure that configuration straps meet the timing requirements specified in Section 9.6.2, Power-On and Configuration Strap Timing and Section 9.6.3, Reset and Configuration Strap Timing. If configuration straps are not at the correct voltage level prior to being latched, the device may capture incorrect strap values.

3.3.1 PORT DISABLE CONFIGURATION (PRT_DIS_P[4:1] / PRT_DIS_M[4:1])

The **PRT_DIS_P[4:1]** / **PRT_DIS_M[4:1]** configuration straps are used in conjunction to disable the related port (4-1)

For **PRT_DIS_Px** (where *x* is the corresponding port 4-1):

0 = Port *x* D+ Enabled

1 = Port *x* D+ Disabled

For **PRT_DIS_Mx** (where *x* is the corresponding port 4-1):

0 = Port *x* D- Enabled

1 = Port *x* D- Disabled

Note: Both **PRT_DIS_Px** and **PRT_DIS_Mx** (where *x* is the corresponding port) must be tied to 3.3 V to disable the associated downstream port. Disabling the USB 2.0 port will also disable the corresponding USB 3.0 port.

3.3.2 NON-REMOVABLE PORT CONFIGURATION (CFG_NON_REM)

The **CFG_NON_REM** configuration strap is used to configure the non-removable port settings of the device to one of five settings. These modes are selected by the configuration of an external resistor on the **CFG_NON_REM** pin. The resistor options are a 200 kΩ pull-down, 200 kΩ pull-up, 10 kΩ pull-down, 10 kΩ pull-up, and 10 Ω pull-down, as shown in Table 3-2.

TABLE 3-2: CFG_NON_REM RESISTOR ENCODING

CFG_NON_REM Resistor Value	Setting
200 kΩ Pull-Down	All ports removable
200 kΩ Pull-Up	Port 1 non-removable
10 kΩ Pull-Down	Ports 1, 2 non-removable
10 kΩ Pull-Up	Ports 1, 2, 3 non-removable
10 Ω Pull-Down	Ports 1, 2, 3, 4 non-removable

3.3.3 BATTERY CHARGING CONFIGURATION (CFG_BC_EN)

The **CFG_BC_EN** configuration strap is used to configure the battery charging port settings of the device to one of five settings. These modes are selected by the configuration of an external resistor on the **CFG_BC_EN** pin. The resistor options are a 200 kΩ pull-down, 200 kΩ pull-up, 10 kΩ pull-down, 10 kΩ pull-up, and 10 Ω pull-down, as shown in Table 3-3.

TABLE 3-3: CFG_BC_EN RESISTOR ENCODING

CFG_BC_EN Resistor Value	Setting
200 kΩ Pull-Down	Battery charging not enable on any port
200 kΩ Pull-Up	BC1.2 DCP and CDP battery charging enabled on Port 1
10 kΩ Pull-Down	BC1.2 DCP and CDP battery charging enabled on Ports 1, 2
10 kΩ Pull-Up	BC1.2 DCP and CDP battery charging enabled on Ports 1, 2, 3
10 Ω Pull-Down	BC1.2 DCP and CDP battery charging enabled on Ports 1, 2, 3, 4

3.3.4 PF[31:4] CONFIGURATION (CFG_STRAP[2:1])

The USB7002 provides 28 programmable function pins (**PF[31:4]**). These pins can be configured to 4 predefined configurations via the **CFG_STRAP[2:1]** pins. These configurations are selected via external resistors on the **CFG_STRAP[2:1]** pins, as detailed in Table 3-4. Resistor values and combinations not detailed in Table 3-4 are reserved and should not be used.

Note: **CFG_STRAP3** is not used and can be left unconnected.

TABLE 3-4: CFG_STRAP[2:1] RESISTOR ENCODING

Mode	CFG_STRAP2 Resistor Value	CFG_STRAP1 Resistor Value
Configuration 1	200 kΩ Pull-Down	200 kΩ Pull-Down
Configuration 2	200 kΩ Pull-Down	200 kΩ Pull-Up
Configuration 3	200 kΩ Pull-Down	10 kΩ Pull-Down
Configuration 4	200 kΩ Pull-Down	10 kΩ Pull-Up

A summary of the configuration pin assignments for each of the 4 configurations is provided in Table 3-5. For details on behavior of each programmable function, refer to Table 3-6.

© 2018-2020 Microchip Technology Inc.

TABLE 3-5: PF[31:4] FUNCTION ASSIGNMENT

Pin	Configuration 1 (SMBus/I²C)	Configuration 2 (I²S)	Configuration 3 (UART)	Configuration 4 (Flex)
PF4	DP2_DISCHARGE	DP2_DISCHARGE	DP2_DISCHARGE	DP2_DISCHARGE
PF5	DP1_DISCHARGE	DP1_DISCHARGE	DP1_DISCHARGE	DP1_DISCHARGE
PF6	GPIO70	GPIO70	UART_RX	GPIO70
PF7	GPIO71	MIC_DET	UART_TX	GPIO71
PF8	DP1_VCONN1	DP1_VCONN1	DP1_VCONN1	DP1_VCONN1
PF9	DP1_VCONN2	DP1_VCONN2	DP1_VCONN2	DP1_VCONN2
PF10	DP2_VCONN1	DP2_VCONN1	DP2_VCONN1	DP2_VCONN1
PF11	DP2_VCONN2	DP2_VCONN2	DP2_VCONN2	DP2_VCONN2
PF12	GPIO76	GPIO76	GPIO76	GPIO76
PF13	PRT_CTL4	PRT_CTL4	PRT_CTL4	PRT_CTL4
PF14	GPIO78	I2S_SDI	UART_nCTS	GPIO78
PF15	PRT_CTL2	PRT_CTL2	PRT_CTL2	PRT_CTL2
PF16	PRT_CTL3	PRT_CTL3	PRT_CTL3	PRT_CTL3
PF17	PRT_CTL1	PRT_CTL1	PRT_CTL1	PRT_CTL1
PF18	MSTR_I2C_CLK	I2S_LRCK	UART_nDCD	GPIO82
PF19	MSTR_I2C_DATA	I2S_SDO	UART_nRTS	GPIO83
PF20	SPI_CE_N	SPI_CE_N	SPI_CE_N	SPI_CE_N
PF21	SPI_CLK	SPI_CLK	SPI_CLK	SPI_CLK
PF22	SPI_D0	SPI_D0	SPI_D0	SPI_D0
PF23	SPI_D1	SPI_D1	SPI_D1	SPI_D1
PF24	SPI_D2	SPI_D2	SPI_D2	SPI_D2
PF25	SPI_D3	SPI_D3	SPI_D3	SPI_D3
PF26	SLV_I2C_CLK	I2S_SCK	UART_nDSR	GPIO90
PF27	SLV_I2C_DATA	I2S_MCLK	UART_nDTR	GPIO91
PF28	GPIO92	GPIO92	GPIO92	GPIO92
PF29	GPIO93	GPIO93	GPIO93	GPIO93
PF30	GPIO94	MSTR_I2C_CLK	GPIO94	GPIO94
PF31	GPIO95	MSTR_I2C_DATA	GPIO95	GPIO95

Note: The default **PF*x*** pin functions can be overridden with additional configuration by modification of the pin mux registers. These changes can be made during the SMBus configuration stage, by programming to OTP memory, or during runtime (after hub has attached and enumerated) by register writes via the SMBus slave interface or USB commands to the internal Hub Feature Controller Device.

TABLE 3-6: PROGRAMMABLE FUNCTIONS DESCRIPTIONS

Function	Buffer Type	Description
Master SMBus/I²C Interface		
MSTR_I2C_CLK	I/O12	Bridging Master SMBus/I²C controller clock (SMBus/I²C controller 1)
MSTR_I2C_DATA	I/O12	Bridging Master SMBus/I²C controller data (SMBus/I²C controller 1)

© 2018-2020 Microchip Technology Inc.

TABLE 3-6: PROGRAMMABLE FUNCTIONS DESCRIPTIONS (CONTINUED)

Function	Buffer Type	Description
Slave SMBus/I2C Interface		
SLV_I2C_CLK	I/O12	Slave SMBus/I2C controller clock (SMBus/I2C controller 2)
SLV_I2C_DATA	I/O12	Slave SMBus/I2C controller data (SMBus/I2C controller 2)
SPI Interface		
SPI_CLK	I/O-U	SPI clock. If the SPI interface is enabled, this pin must be driven low during reset.
SPI_D[3:0]	I/O-U	SPI Data 3-0. If the SPI interface is enabled, these signals function as Data 3 through 0.
SPI_CE_N	I/O12	Active low SPI chip enable input. If the SPI interface is enabled, this pin must be driven high in powerdown states.
UART Interface		
UART_TX	O12	UART Transmit
UART_RX	I	UART Receive
UART_nCTS	I	UART Clear To Send
UART_nRTS	O12	UART Request To Send
UART_nDCD	I	UART Data Carrier Detect
UART_nDSR	I	UART Data Set Ready
UART_nDTR	O12	UART Data Terminal Ready
I2S Interface		
I2S_SDI	I	I2S Serial Data In
I2S_SDO	O12	I2S Serial Data Out
I2S_SCK	O12	I2S Continuous Serial Clock
I2S_LRCK	O12	I2S Word Select / Left-Right Clock
I2S_MCLK	O12	I2S Master Clock
MIC_DET	I	I2S Microphone Plug Detect 0 = No microphone plugged into the audio jack 1 = Microphone plugged into the audio jack
Miscellaneous		
DP2_VCONN1	I/O12	Port 2 VCONN1 enable
DP2_VCONN2	I/O12	Port 2 VCONN2 enable
DP2_DISCHARGE	I/O12	Port 2 DISCHARGE enable
DP1_VCONN1	I/O12	Port 1 VCONN1 enable
DP1_VCONN2	I/O12	Port 1 VCONN2 enable

© 2018-2020 Microchip Technology Inc.

TABLE 3-6: PROGRAMMABLE FUNCTIONS DESCRIPTIONS (CONTINUED)

Function	Buffer Type	Description
DP1_DISCHARGE	I/O12	Port 1 DISCHARGE enable
PRT_CTL4	I/O12 (PU)	Port 4 power enable / overcurrent sense When the downstream port is enabled, this pin is set as an input with an internal pull-up resistor applied. The internal pull-up enables power to the downstream port while the pin monitors for an active low overcurrent signal assertion from an external current monitor on USB port 4. This pin will change to an output and be driven low when the port is disabled by configuration or by the host control. **Note:** This signal controls both the USB 2.0 and USB 3.2 portions of the port.
PRT_CTL3	I/O12 (PU)	Port 3 power enable / overcurrent sense When the downstream port is enabled, this pin is set as an input with an internal pull-up resistor applied. The internal pull-up enables power to the downstream port while the pin monitors for an active low overcurrent signal assertion from an external current monitor on USB port 3. This pin will change to an output and be driven low when the port is disabled by configuration or by the host control. **Note:** This signal controls both the USB 2.0 and USB 3.2 portions of the port.
PRT_CTL2	I/O12 (PU)	Port 2 power enable / overcurrent sense When the downstream port is enabled, this pin is set as an input with an internal pull-up resistor applied. The internal pull-up enables power to the downstream port while the pin monitors for an active low overcurrent signal assertion from an external current monitor on USB port 2. This pin will change to an output and be driven low when the port is disabled by configuration or by the host control. **Note:** This signal controls both the USB 2.0 and USB 3.2 portions of the port.
PRT_CTL1	I/O12 (PU)	Port 1 power enable / overcurrent sense When the downstream port is enabled, this pin is set as an input with an internal pull-up resistor applied. The internal pull-up enables power to the downstream port while the pin monitors for an active low overcurrent signal assertion from an external current monitor on USB port 1. This pin will change to an output and be driven low when the port is disabled by configuration or by the host control. **Note:** This signal controls both the USB 2.0 and USB 3.2 portions of the port.
GPIO*x*	I/O12	General Purpose Inputs/Outputs (*x* = 70-71, 76, 78, 82-83, 90-95)

3.4 Physical and Logical Port Mapping

The USB70xx family of devices are based upon a common architecture, but all have different modifications and/or pin bond outs to achieve the various device configurations. The base chip is composed of a total of 6 USB3 PHYs and 7 USB2 PHYs. These PHYs are physically arranged on the chip in a certain way, which is referred to as the PHYSICAL port mapping.

The actual port numbering is remapped by default in different ways on each device in the family. This changes the way that the ports are numbered from the USB host's perspective. This is referred to as LOGICAL mapping.

The various configuration options available for these devices may, at times, be with respect to PHYSICAL mapping or LOGICAL mapping. Each individual configuration option which has a PHYSICAL or LOGICAL dependency is declared as such within the register description.

The PHYSICAL vs. LOGICAL mapping is described for all port related pins in Table 3-7. A system design in schematics and layout is generally performed using the pinout in Section 3.1, Pin Assignments, which is assigned by the default LOGICAL mapping. Hence, it may be necessary to cross reference the PHYSICAL vs. LOGICAL look up tables when determining the hub configuration.

Note: The MPLAB Connect tool makes configuration simple; the settings can be selected by the user with respect to the LOGICAL port numbering. The tool handles the necessary linking to the PHYSICAL port settings. Refer to Section 6.0, Device Configuration for additional information.

TABLE 3-7: USB7002 PHYSICAL VS. LOGICAL PORT MAPPING

Device Pin	Pin Name	LOGICAL PORT NUMBER						PHYSICAL PORT NUMBER						
		0	1	2	3	4	5	0	1	2	3	4	5	6
5	USB2DN_DP1		X						X					
6	USB2DN_DM1		X						X					
7	USB3DN_TXDP1A		X						X					
8	USB3DN_TXDM1A		X						X					
10	USB3DN_RXDP1A		X						X					
11	USB3DN_RXDM1A		X						X					
14	USB2DN_DP3				X					X				
15	USB2DN_DM3				X					X				
16	USB3DN_TXDP1B		X							X				
17	USB3DN_TXDM1B		X							X				
19	USB3DN_RXDP1B		X							X				
20	USB3DN_RXDM1B		X							X				
29	USB2DN_DP2			X							X			
30	USB2DN_DM2			X							X			
31	USB3DN_TXDP2A			X							X			
32	USB3DN_TXDM2A			X							X			
34	USB3DN_RXDP2A			X							X			
35	USB3DN_RXDM2A			X							X			
37	USB2DN_DP4					X						X		
38	USB2DN_DM4					X						X		
39	USB3DN_TXDP2B			X								X		
40	USB3DN_TXDM2B			X								X		
42	USB3DN_RXDP2B			X								X		
43	USB3DN_RXDM2B			X								X		
81	USB3UP_TXDPB	X											X	
82	USB3UP_TXDMB	X											X	

© 2018-2020 Microchip Technology Inc.

TABLE 3-7: USB7002 PHYSICAL VS. LOGICAL PORT MAPPING (CONTINUED)

Device Pin	Pin Name	LOGICAL PORT NUMBER						PHYSICAL PORT NUMBER						
		0	1	2	3	4	5	0	1	2	3	4	5	6
84	USB3UP_RXDPB	X											X	
85	USB3UP_RXDMB	X											X	
89	USB2UP_DP	X						X						
90	USB2UP_DM	X						X						
91	USB3UP_TXDPA	X						X						
92	USB3UP_TXDMA	X						X						
94	USB3UP_RXDPA	X						X						
95	USB3UP_RXDMA	X						X						

4.0 DEVICE CONNECTIONS

4.1 Power Connections

Figure 4-1 illustrates the device power connections.

FIGURE 4-1: POWER CONNECTIONS

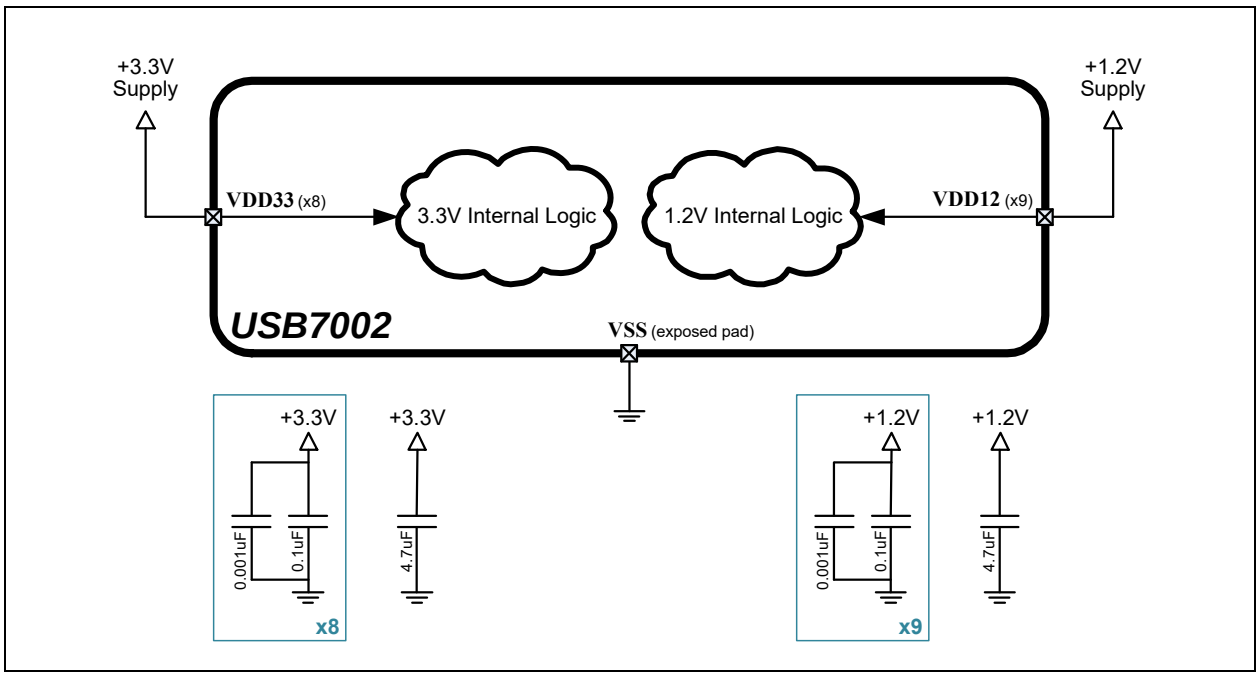

4.2 SPI/SQI Flash Connections

Figure 4-2 illustrates the Quad-SPI flash connections.

FIGURE 4-2: QUAD-SPI FLASH CONNECTIONS

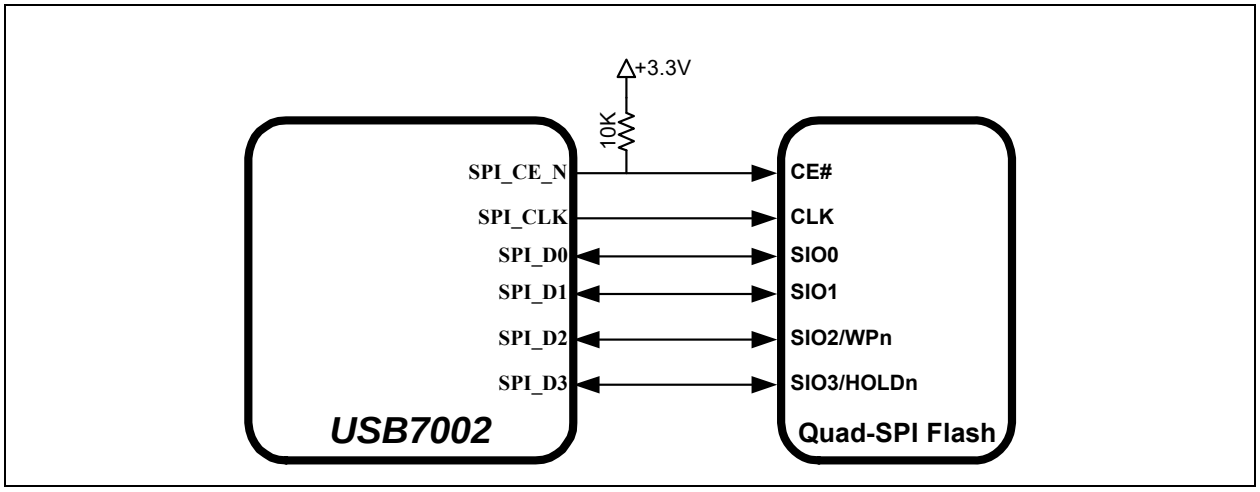

© 2018-2020 Microchip Technology Inc.

4.3 SMBus/I²C Connections

Figure 4-3 illustrates the SMBus/I²C connections.

FIGURE 4-3: SMBUS/I²C CONNECTIONS

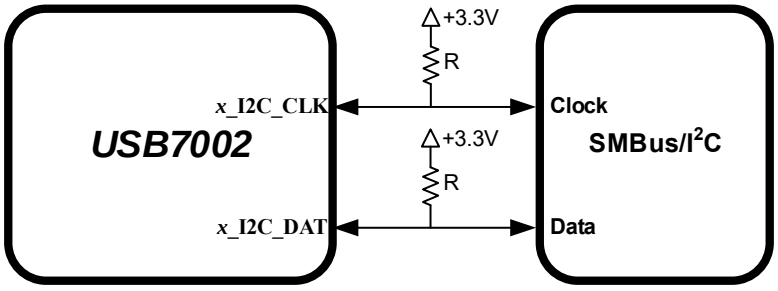

R = 4.7K for 400/100KHz Master I²C interfaces,
1.0K for 1MHz Master I²C interfaces,
10K for Slave I²C interfaces

Note: Resistor values detailed in Figure 4-3 are suggestions. Optimal pull-up values may vary dependent on external factors.

4.4 I²S Connections

Figure 4-4 illustrates the I²S connections.

FIGURE 4-4: I²S CONNECTIONS

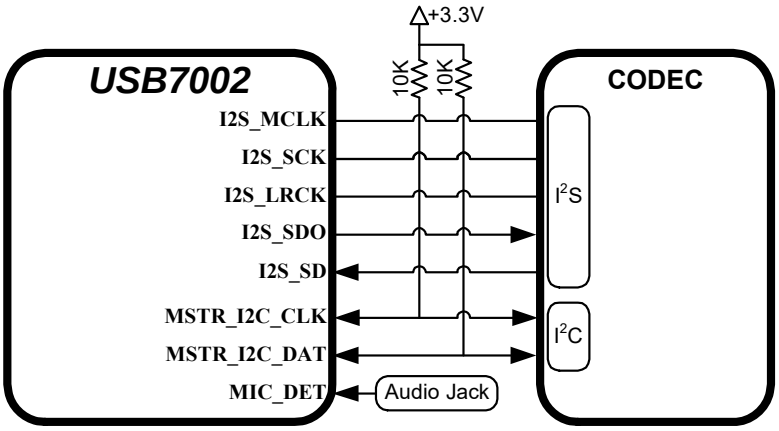

4.5 UART Connections

Figure 4-5 illustrates the UART connections.

FIGURE 4-5: UART CONNECTIONS

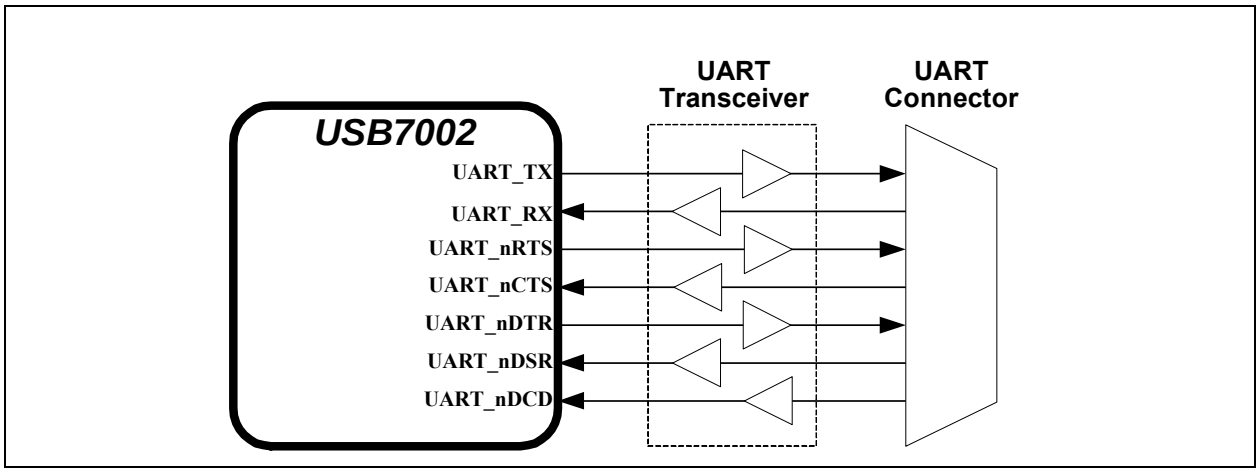

© 2018-2020 Microchip Technology Inc.

5.0 MODES OF OPERATION

The device provides two main modes of operation: Standby Mode and Hub Mode. These modes are controlled via the RESET_N pin, as shown in Table 5-1.

TABLE 5-1: MODES OF OPERATION

RESET_N Input	Summary
0	**Standby Mode**: This is the lowest power mode of the device. No functions are active other than monitoring the RESET_N input. All port interfaces are high impedance and the PLL is halted. Refer to Section 8.10, Resets for additional information on RESET_N.
1	**Hub (Normal) Mode**: The device operates as a configurable USB hub. This mode has various sub-modes of operation, as detailed in Figure 5-1. Power consumption is based on the number of active ports, their speed, and amount of data received.

The flowchart in Figure 5-1 details the modes of operation and details how the device traverses through the Hub Mode stages (shown in bold). The remaining sub-sections provide more detail on each stage of operation.

FIGURE 5-1: HUB MODE FLOWCHART

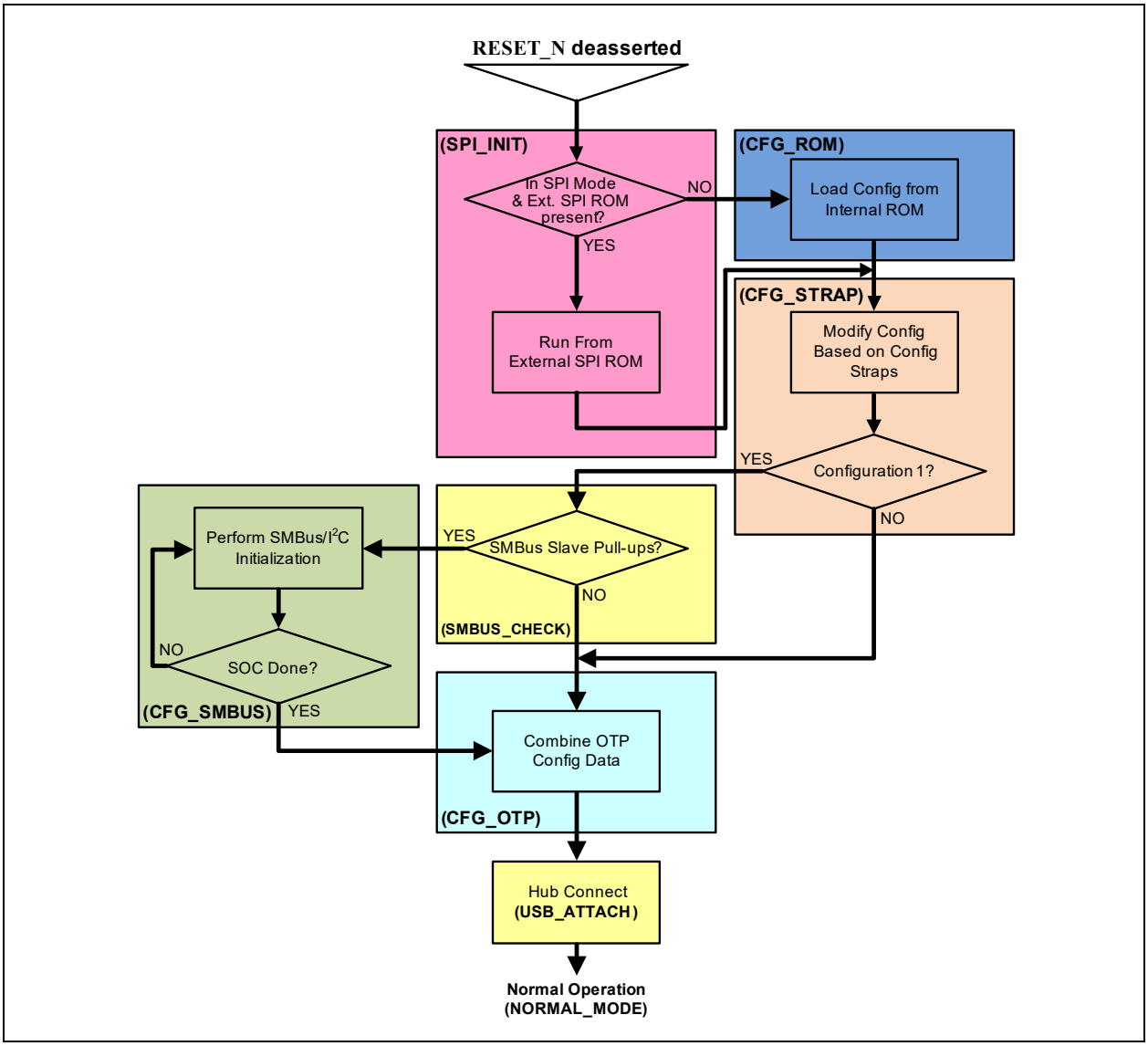

5.1 Boot Sequence

5.1.1 STANDBY MODE

If the **RESET_N** pin is asserted, the hub will be in Standby Mode. This mode provides a very low power state for maximum power efficiency when no signaling is required. This is the lowest power state. In Standby Mode all downstream ports are disabled, the USB data pins are held in a high-impedance state, all transactions immediately terminate (no states saved), all internal registers return to their default state, the PLL is halted, and core logic is powered down in order to minimize power consumption. Because core logic is powered off, no configuration settings are retained in this mode and must be re-initialized after **RESET_N** is negated high.

5.1.2 SPI INITIALIZATION STAGE (SPI_INIT)

The first stage, the initialization stage, occurs on the deassertion of **RESET_N**. In this stage, the internal logic is reset, the PLL locks if a valid clock is supplied, and the configuration registers are initialized to their default state. The internal firmware then checks for an external SPI ROM. The firmware looks for an external SPI flash device that contains a valid signature of "2DFU" (device firmware upgrade) beginning at address 0x3FFFA. If a valid signature is found, then the external SPI ROM is enabled and the code execution begins at address 0x0000 in the external SPI device. If a valid signature is not found, then execution continues from internal ROM (CFG_ROM stage).

The required SPI ROM must be a minimum of 1 Mbit, and 60 MHz or faster. Both 1, 2, and 4-bit SPI operation is supported. For optimum throughput, a 2-bit SPI ROM is recommended. Both mode 0 and mode 3 SPI ROMs are also supported.

If the system is not strapped for SPI Mode, code execution will continue from internal ROM (CFG_ROM stage).

5.1.3 CONFIGURATION FROM INTERNAL ROM STAGE (CFG_ROM)

In this stage, the internal firmware loads the default values from the internal ROM. Most of the hub configuration registers, USB descriptors, electrical settings, etc. will be initialized in this state.

5.1.4 CONFIGURATION STRAP READ STAGE (CFG_STRAP)

In this stage, the firmware reads the following configuration straps to override the default values:

- CFG_STRAP[3:1]
- **PRT_DIS_P[4:1]**
- **PRT_DIS_M[4:1]**
- **CFG_NON_REM**
- **CFG_BC_EN**

If the **CFG_STRAP[3:1]** pins are set to Configuration 1, the device will move to the SMBUS_CHECK stage, otherwise it will move to the CFG_OTP stage. Refer to Section 3.3, Configuration Straps and Programmable Functions for information on usage of the various device configuration straps.

5.1.5 SMBUS CHECK STAGE (SMBUS_CHECK)

Based on the **PF[31:4]** configuration selected (refer to Section 3.3.4, PF[31:4] Configuration (CFG_STRAP[2:1])), the firmware will check for the presence of external pull up resistors on the SMBus slave programmable function pins. If pull-ups are detected on both pins, the device will be configured as an SMBus slave, and the next state will be CFG_SMBUS. If a pull-up is not detected in either of the pins, the next state is CFG_OTP.

5.1.6 SMBUS CONFIGURATION STAGE (CFG_SMBUS)

In this stage, the external SMBus master can modify any of the default configuration settings specified in the integrated ROM, such as USB device descriptors, port electrical settings, and control features such as downstream battery charging.

There is no time limit on this mode. In this stage the firmware will wait indefinitely for the SMBus/I^2C configuration. The external SMBus master writes to register 0xFF to end the configuration in legacy mode. In non-legacy mode, the SMBus command USB_ATTACH (opcode 0xAA55) or USB_ATTACH_WITH_SMBUS (opcode 0xAA56) will finish the configuration.

© 2018-2020 Microchip Technology Inc.

5.1.7 OTP CONFIGURATION STAGE (CFG_OTP)

Once the SOC has indicated that it is done with configuration, all configuration data is combined in this stage. The default data, the SOC configuration data, and the OTP data are all combined in the firmware and the device is programmed.

5.1.8 HUB CONNECT STAGE (USB_ATTACH)

Once the hub registers are updated through default values, SMBus master, and OTP, the device firmware will enable attaching the USB host by setting the USB_ATTACH bit in the HUB_CMD_STAT register (for USB 2.0) and the USB3_HUB_ENABLE bit (for USB 3.2). The device will remain in the Hub Connect stage indefinitely.

5.1.9 NORMAL MODE (NORMAL_MODE)

Lastly, the hub enters Normal Mode of operation. In this stage full USB operation is supported under control of the USB Host on the upstream port. The device will remain in the normal mode until the operating mode is changed by the system.

If **RESET_N** is asserted low, then Standby Mode is entered. The device may then be placed into any of the designated hub stages. Asserting a soft disconnect on the upstream port will cause the hub to return to the Hub Connect stage until the soft disconnect is negated.

6.0 DEVICE CONFIGURATION

The device supports a large number of features (some mutually exclusive), and must be configured in order to correctly function when attached to a USB host controller. Microchip provides a comprehensive software programming tool, MPLAB Connect Configurator (formerly ProTouch2), for OTP configuration of various USB7002 functions and registers. All configuration is to be performed via the MPLAB Connect Configurator programming tool. For additional information on this tool, refer to the MPLAB Connect Configurator programming tool product page at http://www.microchip.com/design-centers/usb/mplab-connect-configurator.

Additional information on configuring the USB7002 is also provided in the "*Configuration of the USB7002/USB705x*" application note, which contains details on the hub operational mode, SOC configuration stage, OTP configuration, USB configuration, and configuration register definitions. This application note, along with additional USB7002 resources, can be found on the Microchip USB7002 product page at www.microchip.com/USB7002.

Note:	The USB7002 requires external firmware to operate. Refer to the "*Configuration of the USB7002/USB705x*" application note for additional information.

Note:	Device configuration straps and programmable pins are detailed in Section 3.3, Configuration Straps and Programmable Functions. Refer to Section 7.0, Device Interfaces for detailed information on each device interface.

© 2018-2020 Microchip Technology Inc.

7.0 DEVICE INTERFACES

The USB7002 provides multiple interfaces for configuration, external memory access, etc.. This section details the various device interfaces:

- SPI/SQI Master Interface
- SMBus/I2C Master/Slave Interfaces
- I2S Interface
- UART Interface

Note: For details on how to enable each interface, refer to Section 3.3, Configuration Straps and Programmable Functions.

For information on device connections, refer to Section 4.0, Device Connections. For information on device configuration, refer to Section 6.0, Device Configuration.

Microchip provides a comprehensive software programming tool, MPLAB Connect Configurator (formerly ProTouch2), for configuring the USB7002 functions, registers and OTP memory. All configuration is to be performed via the MPLAB Connect Configurator programming tool. For additional information on this tool, refer to th MPLAB Connect Configurator programming tool product page at http://www.microchip.com/design-centers/usb/mplab-connect-configurator.

7.1 SPI/SQI Master Interface

The SPI/SQI controller has two basic modes of operation: execution of an external hub firmware image, or the USB to SPI bridge. On power up, the firmware looks for an external SPI flash device that contains a valid signature of 2DFU (device firmware upgrade) beginning at address 0x3FFFA. If a valid signature is found, then the external ROM mode is enabled and the code execution begins at address 0x0000 in the external SPI device. If a valid signature is not found, then execution continues from internal ROM and the SPI interface can be used as a USB to SPI bridge.

The second mode of operation is the USB to SPI bridge operation. Additional details on this feature can be found in Section 8.7, USB to SPI Bridging.

Table 7-1 details how the associated pins are mapped in SPI vs. SQI mode.

TABLE 7-1: SPI/SQI PIN USAGE

SPI Mode	SQI Mode	Description
SPI_CE_N	SPI_CE_N	SPI/SQI Chip Enable (Active Low)
SPI_CLK	SPI_CLK	SPI/SQI Clock
SPI_D0	SPI_D0	SPI Data Out; SQI Data I/O 0
SPI_D1	SPI_D1	SPI Data In; SQI Data I/O 1
-	SPI_D2	SQI Data I/O 2
-	SPI_D3	SQI Data I/O 3

Note: For SPI/SQI master timing information, refer to Section 9.6.8, SPI/SQI Master Timing.

7.2 SMBus/I^{2}C Master/Slave Interfaces

The device provides two independent SMBus/I^{2}C controllers (Slave, and Master) which can be used to access internal device run time registers or program the internal OTP memory. The device contains two 128 byte buffers to enable simultaneous master/slave operation and to minimize firmware overhead in processed I^{2}C packets. The I^{2}C interfaces support 100KHz Standard-mode (Sm) and 400KHz Fast Mode (Fm) operation.

The SMBus/I^{2}C interfaces are assigned to programmable pins (**PF*x***) and therefore the device must be programmed into specific configurations to enable specific interfaces. Refer to Section 3.3.4, PF[31:4] Configuration (CFG_STRAP[2:1]) for additional information.

Note: For SMBus/I2C timing information, refer to Section 9.6.5, SMBus Timing and Section 9.6.6, I2C Timing.

7.3 I2S Interface

The device provides an integrated I2S interface to facilitate the connection of digital audio devices. The I2S interface conforms to the voltage, power, and timing characteristics/specifications as set forth in the *I2S-Bus Specification*, and consists of the following signals:

- **I2S_SDI**: Serial Data Input
- **I2S_SDO**: Serial Data Output
- **I2S_SCK**: Serial Clock
- **I2S_LRCK**: Left/Right Clock (SS/FSYNC)
- **I2S_MCLK**: Master Clock
- **MIC_DET**: Microphone Plug Detect

Each audio connection is half-duplex, so **I2S_SDO** exists only on the transmit side and **I2S_SDI** exists only on the receive side of the interface. Some codecs refer to the Serial Clock (**I2S_SCK**) as Baud/Bit Clock (BCLK). Also, the Left/Right Clock is commonly referred to as LRC or LRCK. The I2S and other audio protocols refer to LRC as Word Select (WS).

The following codec is supported by the default settings:

- Analog Devices ADAU1961 (24-bit 48kHz)

Additional codecs are also supported with modifications to the configuration register settings. Use the following table as a guide for assessing I2S codec compatibility. For additional details on how to implement the necessary configuration settings, refer to the application note, **"USB7002/USB705x I2S Operation"**.

TABLE 7-2: USB TO I2S

Parameter	Supported Values
Sampling Frequency (fs)	8kHz, 11.025kHz, 12kHz, 16kHz, 22.05kHz, 24kHz, 32kHz, 44.1kHz, 48kHz
MCLK Frequency. (Multiple of Sampling frequency)	From 1*fs to 1024*fs. MCLK can take continuous values also. However, the I2S LRCLK signal is derived from the MCLK source, so it is advisable to keep MCLK signal frequency "Even integer Multiple of Sampling frequency".
Audio Sample size	16-bits/sample, 24-bits/sample, 32-bits/sample
I2S Audio Interface Format	I2S Mode, Left Justified Mode, Right Justified Mode
I2C Master Control Interface Frequency	100kHz and 400kHz
Audio channels	Mono Mode and Stereo Mode
Enabling disabling the I2S-Bridge Interfaces	Audio Out only (Speaker Interface) Mode (Or) Audio IN only (Mic Interface) (Or) Enable both Audio IN and OUT interfaces (Or) Disable both Audio IN and Audio Out interfaces.
Enabling Disabling of Jack-Detection interface	Enable the Audio Jack-Insert detection HID interface / Disable the Jack detection interface.

Note: For I2S timing information, refer to Section 9.6.7, I2S Timing. For detailed information on utilizing the I2S interface, refer to the application note "*USB7002/USB705x I2S Operation*", which can be found on the Microchip USB7002 product page at www.microchip.com/USB7002.

© 2018-2020 Microchip Technology Inc.

7.3.1 MODES OF OPERATION

The USB audio class operates in three ways: Asynchronous, Synchronous and Adaptive. There are also multiple operating modes, such as hi-res, streaming, etc.. Typically for USB devices, inputs such as microphones are Asynchronous, and output devices such as speakers are Adaptive. The hardware is set up to handle all three modes of operation. It is recommended that the following configuration be used: Asynchronous IN; Adaptive OUT; 48Khz streaming mode; Two channels: 16 bits per channel.

7.3.1.1 Asynchronous IN 48KHz Streaming

In this mode, the codec sampling clock is set to 48Khz based on the local oscillator. This clock is never changed. The data from the codec is fed into the input FIFO. Since the sampling clock is asynchronous to the host clock, the amount of data captured in every USB frame will vary. This issue is left for the host to handle. The input FIFO has two markers, a low water mark (THRESHOLD_LOW_VAL), and a high water mark (THRESHOLD_HIGH_VAL). There are three registers to determine how much data to send back in each frame. If the amount of data in the FIFO exceeds the high water mark, then HI_PKT_SIZE worth of data is sent. If the data is between the high and low water mark, the normal MID_PKT_SIZE amount of data is sent. If the data is below the low water mark, LO_PKT_SIZE worth of data is sent.

7.3.1.2 Adaptive OUT 48KHz Streaming

In this mode, the codec sampling clock is initially set to 48Khz based on the local oscillator. The host data is fed into the OUT FIFO. The host will send the same amount of data on every frame, i.e. 48KHz of data based on the host clock. The codec sampling clock is asynchronous to the host clock. This will cause the amount of data in the OUT FIFO to vary. If the amount of data in the FIFO exceeds the high water mark, then the sampling clock is increased. If the data is between the high and low water mark, the sampling clock does not change. If the data is below the low water mark, the sampling clock is decreased.

7.3.1.3 Synchronous Operation

For synchronous operation, the internal clock must be synchronized with the host SOF. The Frame SOF is nominally 1mS. Since there is significant jitter in the SOFs, there is circuitry provided to measure the SOFs over a long period of time to get a more accurate reading. The calculated host frequency is used to calculate the codec sampling clock.

7.4 UART Interface

The device incorporates a configurable universal asynchronous receiver/transmitter (UART) that is functionally compatible with the NS 16550AF, 16450, 16450 ACE registers and the 16C550A. The UART performs serial-to-parallel conversion on received characters and parallel-to-serial conversion on transmit characters. Two sets of baud rates are provided: 24 Mhz and 16 MHz. When the 24 Mhz source clock is selected, standard baud rates from 50 to 115.2 K are available. When the source clock is 16 MHz, baud rates from 125 K to 1,000 K are available. The character options are programmable for the transmission of data in word lengths of from five to eight, 1 start bit; 1, 1.5 or 2 stop bits; even, odd, sticky or no parity; and prioritized interrupts. The UART contains a programmable baud rate generator that is capable of dividing the input clock or crystal by a number from 1 to 65535. The UART is also capable of supporting the MIDI data rate.

The UART interface is assigned to programmable pins (**PF*x***) and therefore the device must be programmed into specific configurations to enable the interface. Refer to Section 3.3.4, PF[31:4] Configuration (CFG_STRAP[2:1]) for additional information.

7.4.1 TRANSMIT OPERATION

Transmission is initiated by writing the data to be sent to the TX Holding Register or TX FIFO (if enabled). The data is then transferred to the TX Shift Register together with a start bit and parity and stop bits as determined by settings in the Line Control Register. The bits to be transmitted are then shifted out of the TX Shift Register in the order Start bit, Data bits (LSB first), Parity bit, Stop bit, using the output from the Baud Rate Generator (divided by 16) as the clock.

If enabled, a TX Holding Register Empty interrupt will be generated when the TX Holding Register or the TX FIFO (if enabled) becomes empty.

When FIFOs are enabled (i.e. bit 0 of the FIFO Control Register is set), the UART can store up to 16 bytes of data for transmission at a time. Transmission will continue until the TX FIFO is empty. The FIFO's readiness to accept more data is indicated by interrupt.

7.4.2 RECEIVE OPERATION

Data is sampled into the RX Shift Register using the Receive clock, divided by 16. The Receive clock is provided by the Baud Rate Generator. A filter is used to remove spurious inputs that last for less than two periods of the Receive clock. When the complete word has been clocked into the receiver, the data bits are transferred to the RX Buffer Register or to the RX FIFO (if enabled) to be read by the CPU. (The first bit of the data to be received is placed in bit 0 of this register.) The receiver also checks that the parity bit and stop bits are as specified by the Line Control Register.

If enabled, an RX Data Received interrupt will be generated when the data has been transferred to the RX Buffer Register or, if FIFOs are enabled, when the RX Trigger Level has been reached. Interrupts can also be generated to signal RX FIFO Character Timeout, incorrect parity, a missing stop bit (frame error) or other Line Status errors.

When FIFOs are enabled (i.e. bit 0 of the FIFO Control Register is set), the UART can store up to 16 bytes of received data at a time. Depending on the selected RX Trigger Level, interrupt will go active to indicate that data is available when the RX FIFO contains 1, 4, 8 or 14 bytes of data.

© 2018-2020 Microchip Technology Inc.

8.0 FUNCTIONAL DESCRIPTIONS

This section details various USB7002 functions, including:

- Downstream Battery Charging
- Port Power Control
- CC Pin Orientation and Detection
- FlexConnect
- USB to GPIO Bridging
- USB to GPIO Bridging
- USB to I2C Bridging
- USB to SPI Bridging
- USB to UART Bridging
- Link Power Management (LPM)
- Resets

8.1 Downstream Battery Charging

The device can be configured by an OEM to have any of the downstream ports support battery charging. The hub's role in battery charging is to provide acknowledgment to a device's query as to whether the hub system supports USB battery charging. The hub silicon does not provide any current or power FETs or any additional circuitry to actually charge the device. Those components must be provided externally by the OEM.

FIGURE 8-1: BATTERY CHARGING EXTERNAL POWER SUPPLY

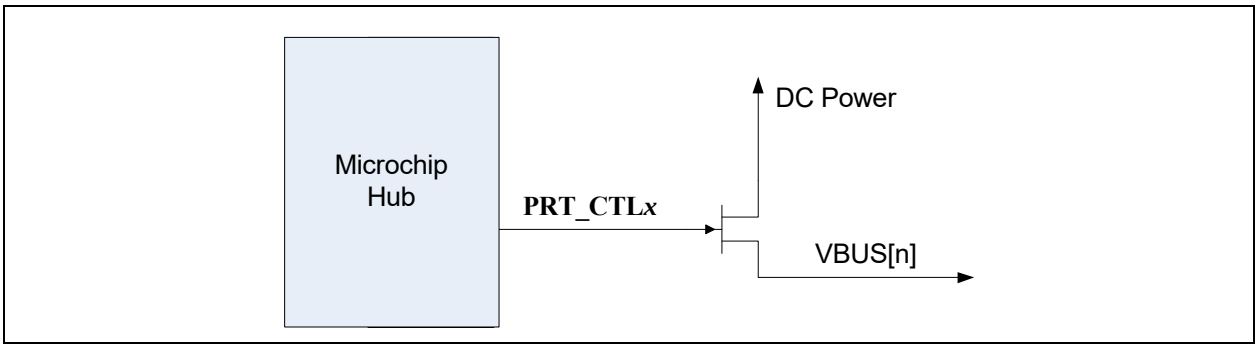

If the OEM provides an external supply capable of supplying current per the battery charging specification, the hub can be configured to indicate the presence of such a supply from the device. This indication, via the **PRT_CTL*x*** pins, is on a per port basis. For example, the OEM can configure two ports to support battery charging through high current power FETs and leave the other two ports as standard USB ports.

The port control signals are assigned to programmable pins (**PF*x***) and therefore the device must be programmed into specific configurations to enable the signals. Refer to Section 3.3.4, PF[31:4] Configuration (CFG_STRAP[2:1]) for additional information.

For detailed information on utilizing the battery charging feature, refer to the application note "*USB Battery Charging with Microchip USB7002 and USB705x Hubs*", which can be found on the Microchip USB7002 product page www.microchip.com/USB7002.

8.2 Port Power Control

Port power and over-current sense share the same pin (**PRT_CTLx**) for each port. These functions can be controlled directly from the USB hub, or via the processor.

Note:	The **PRT_CTLx** function is assigned to programmable function pins (**PFx**) via configuration straps. Refer to Section 3.3.4, PF[31:4] Configuration (CFG_STRAP[2:1]) for additional information.

8.2.1 PORT POWER CONTROL USING USB POWER SWITCH

When operating in combined mode, the device will have one port power control and over-current sense pin for each downstream port. When disabling port power, the driver will actively drive a '0'. To avoid unnecessary power dissipation, the pull-up resistor will be disabled at that time. When port power is enabled, it will disable the output driver and enable the pull-up resistor, making it an open drain output. If there is an over-current situation, the USB Power Switch will assert the open drain OCS signal. The Schmidt trigger input will recognize that as a low. The open drain output does not interfere. The over-current sense filter handles the transient conditions such as low voltage while the device is powering up.

FIGURE 8-2: PORT POWER CONTROL WITH USB POWER SWITCH

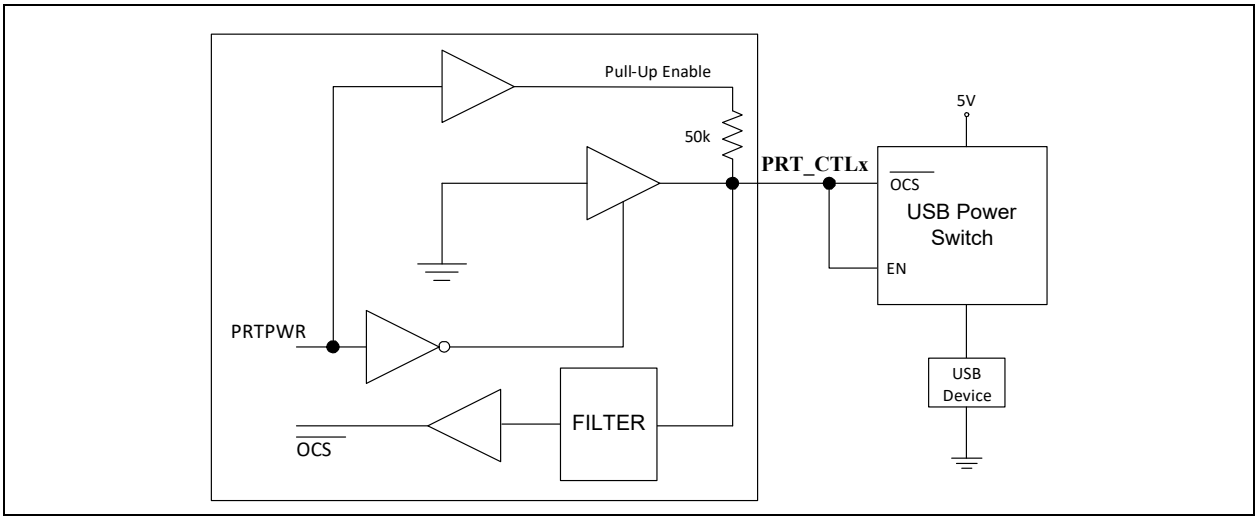

© 2018-2020 Microchip Technology Inc.

8.2.1.1 Port Power Control Using Poly Fuse

When using the device with a poly fuse, there is no need for an output power control. A single port power control and over-current sense for each downstream port is still used from the Hub's perspective. When disabling port power, the driver will actively drive a '0'. This will have no effect as the external diode will isolate pin from the load. When port power is enabled, it will disable the output driver and enable the pull-up resistor. This means that the pull-up resistor is providing 3.3 volts to the anode of the diode. If there is an over-current situation, the poly fuse will open. This will cause the cathode of the diode to go to 0 volts. The anode of the diode will be at 0.7 volts, and the Schmidt trigger input will register this as a low resulting in an over-current detection. The open drain output does not interfere.

FIGURE 8-3: PORT POWER CONTROL USING A POLY FUSE

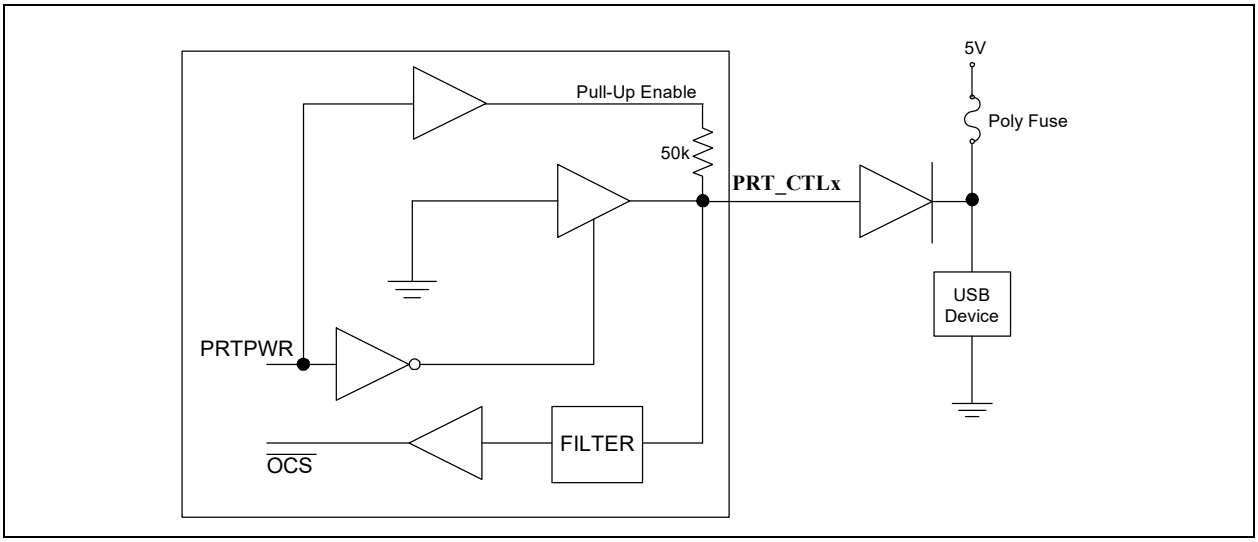

8.3 CC Pin Orientation and Detection

The device provides CC1 and CC2 pins on all Type-C ports for cable plug orientation and detection of a USB Type-C receptacle. The device also integrates a comparator and DAC circuit to implement Type-C attach and detach functions, which supports up to eight programmable thresholds for attach detection between a UFP and DFP. When operating as a UFP, the device supports detecting changes in the DFP's advertised thresholds. Default nominal values for the thresholds detected by the CC comparator are:

- 0.20 V
- 0.40 V
- 0.66 V
- 0.80 V
- 1.23 V
- 1.60 V
- 2.60 V

When operating as a DFP, the device implements current sources to advertise current charging capabilities on both CC pins. When a UFP connection is established, the current driven across the CC pins creates a voltage across the UFP's Rd pull-down that can be detected by the integrated CC comparator. When connected to an active cable, an alternative pull-down, Ra, appears on the CC pin.

When operating as a UFP, the device applies an Rd pull-down on both CC lines and waits for a DFP connection from the assertion of VBUS. The CC comparator is used to determine the advertised current charger capabilities supported by the DFP.

VCONN is a 5V supply used to power circuitry in the USB Type-C plug that is required to implement Electronically Marked Cables. By default the DFP always sources VCONN when connected to an active cable. The USB7002 requires the use of two external VCONN FETs. The device provides the enables for these FETs, and can detect an OCS by monitoring the output voltage of the FET via the CC pins.

The device also implements a comparator for determining when a VBUS is within a programmed range, vSafe5V or vSafe0V. VBUS is divided down externally to provide a nominal 3.3V at the **VBUS_MON** pin. For a DFP, the VBUS comparator is useful to detect when VBUS is within the desired range per power delivery negotiations. For a UFP, the VBUS comparator is utilized to determine when a DFP is attached or detached. It may also use the comparator to determine when VBUS is within a new voltage range per power delivery negotiations.

Note:	The native USB Type-C functionality (including CC pin orientation and detection features) is managed autonomously by the USB7002.

8.4 FlexConnect

The device allows the upstream port to be swapped with any downstream port, enabling any USB port to assume the role of USB host at any time during hub operation. This host role exchange feature is called FlexConnect. Additionally, the USB 2.0 ports can be flexed independently of the USB 3.2 ports.

This functionality can be used in two primary ways:

1. **Host Swapping:** This functionality can be achieved through a hub wherein a host and device can agree to swap the host/device relationship; The host becomes a device, and the device becomes a host.
2. **Host Sharing:** A USB ecosystem can be shared between multiple hosts. Note that only 1 host may access to the USB tree at a time.

FlexConnect can be enabled through any of the following three methods:

- **I^{2}C Control:** The embedded I^{2}C slave can be used to control the state of the FlexConnect feature through basic write/read operations.
- **USB Command:** FlexConnect can be initiated via a special USB command directed to the hub's internal Hub Feature Controller device.
- **Direct Pin Control:** Any available GPIO pin on the hub can be assigned the role of a FlexConnect control pin.

For detailed information on utilizing the FlexConnect feature, refer to the application note "*USB7002/USB705x FlexConnect Operation*", which can be found on the Microchip USB7002 product page at www.microchip.com/USB7002.

8.5 USB to GPIO Bridging

The USB to GPIO bridging feature provides system designers expanded system control and potential BOM reduction. General Purpose Input/Outputs (GPIOs) may be used for any general 3.3V level digital control and input functions.

Commands may be sent from the USB Host to the internal Hub Feature Controller device in the Microchip hub to perform the following functions:

- Set the direction of the GPIO (input or output)
- Enable a pull-up resistor
- Enable a pull-down resistor
- Read the state
- Set the state

For detailed information on utilizing the USB to GPIO bridging feature, refer to the application note "*USB to GPIO Bridging with Microchip USB7002 and USB705x Hubs*", which can be found on the Microchip USB7002 product page at www.microchip.com/USB7002.

8.6 USB to I^{2}C Bridging

The USB to I^{2}C bridging feature provides system designers expanded system control and potential BOM reduction. The use of a separate USB to I^{2}C device is no longer required and a downstream USB port is not lost, as occurs when a standalone USB to I^{2}C device is implemented.

© 2018-2020 Microchip Technology Inc.

Commands may be sent from the USB Host to the internal Hub Feature Controller device in the Microchip hub to perform the following functions:

- Configure I^2C Pass-Through Interface
- I^2C Write
- I^2C Read

For detailed information on utilizing the USB to I^2C bridging feature, refer to the application note "*USB to I^2C Bridging with Microchip USB7002 and USB705x Hubs*", which can be found on the Microchip USB7002 product page at www.microchip.com/USB7002.

8.7 USB to SPI Bridging

The USB to SPI bridging feature provides system designers expanded system control and potential BOM reduction. The use of a separate USB to SPI device is no longer required and a downstream USB port is not lost, as occurs when a standalone USB to SPI device is implemented.

Commands may be sent from the USB Host to the internal Hub Feature Controller device in the Microchip hub to perform the following functions:

- Enable SPI Pass-Through Interface
- SPI Write/Read
- Disable SPI Pass-Through Interface

For detailed information on utilizing the USB to SPI bridging feature, refer to the application note "*USB to SPI Bridging with Microchip USB7002 and USB705x Hubs*", which can be found on the Microchip USB7002 product page at www.microchip.com/USB7002.

8.8 USB to UART Bridging

The USB to UART bridging feature provides system designers with expanded system control and potential BOM reduction. When using Microchip's USB hubs, a separate USB to UART device is no longer required and a downstream USB port is not lost, as occurs when a standalone USB to UART device is implemented.

Commands may be sent from the USB Host to the internal Hub Feature Controller device in the Microchip hub to perform the following functions:

- Enable/Disable UART Interface
- Set UART Interface Baud Rate
- UART Write
- UART Read

For detailed information on utilizing the USB to UART bridging feature, refer to the application note "*USB to UART Bridging with Microchip USB7002 and USB705x Hubs*", which can be found on the Microchip USB7002 product page at www.microchip.com/USB7002.

8.9 Link Power Management (LPM)

The device supports the L0 (On), L1 (Sleep), and L2 (Suspend) link power management states. These supported LPM states offer low transitional latencies in the tens of microseconds versus the much longer latencies of the traditional USB suspend/resume in the tens of milliseconds. The supported LPM states are detailed in Table 8-1.

TABLE 8-1: LPM STATE DEFINITIONS

State	Description	Entry/Exit Time to L0
L2	Suspend	Entry: ~3 ms Exit: ~2 ms (from start of RESUME)
L1	Sleep	Entry: <10 us Exit: <50 us
L0	Fully Enabled (On)	-

8.10 Resets

The device includes the following chip-level reset sources:

- Power-On Reset (POR)
- External Chip Reset (RESET_N)
- USB Bus Reset

8.10.1 POWER-ON RESET (POR)

A power-on reset occurs whenever power is initially supplied to the device, or if power is removed and reapplied to the device. A timer within the device will assert the internal reset per the specifications listed in Section 9.6.2, Power-On and Configuration Strap Timing.

8.10.2 EXTERNAL CHIP RESET (RESET_N)

A valid hardware reset is defined as assertion of **RESET_N**, after all power supplies are within operating range, per the specifications in Section 9.6.3, Reset and Configuration Strap Timing. While reset is asserted, the device (and its associated external circuitry) enters Standby Mode and consumes minimal current.

Assertion of **RESET_N** causes the following:

1. The PHY is disabled and the differential pairs will be in a high-impedance state.
2. All transactions immediately terminate; no states are saved.
3. All internal registers return to the default state.
4. The external crystal oscillator is halted.
5. The PLL is halted.

Note:	All power supplies must have reached the operating levels mandated in Section 9.2, Operating Conditions**, prior to (or coincident with) the assertion of **RESET_N**.

8.10.3 USB BUS RESET

In response to the upstream port signaling a reset to the device, the device performs the following:

1. Sets default address to 0.
2. Sets configuration to Unconfigured.
3. Moves device from suspended to active (if suspended).
4. Complies with the USB Specification for behavior after completion of a reset sequence.

The host then configures the device in accordance with the USB Specification.

Note:	The device does not propagate the upstream USB reset to downstream devices.

© 2018-2020 Microchip Technology Inc.

9.0 OPERATIONAL CHARACTERISTICS

9.1 Absolute Maximum Ratings*

+1.2 V Supply Voltage (**VDD12**) (Note 1) ..... -0.5 V to +1.32 V

+3.3 V Supply Voltage (**VDD33**) (Note 1) ..... -0.5 V to +4.6 V

Positive voltage on input signal pins, with respect to ground (Note 2) ..... +4.6 V

Negative voltage on input signal pins, with respect to ground ..... -0.5 V

Positive voltage on **XTALI/CLK_IN**, with respect to ground ..... +3.63 V

Positive voltage on USB DP/DM signal pins, with respect to ground ..... +6.0 V

Positive voltage on USB 3.2 Gen 1 **USB3UP_*xxxx*** and **USB3DN_*xxxx*** signal pins, with respect to ground ..... 1.32 V

Storage Temperature ..... -55°C to +150°C

Junction Temperature ..... +125°C

Lead Temperature Range ..... Refer to JEDEC Spec. J-STD-020

HBM ESD Performance ..... +/-3 kV

1: When powering this device from laboratory or system power supplies, it is important that the absolute maximum ratings not be exceeded or device failure can result. Some power supplies exhibit voltage spikes on their outputs when AC power is switched on or off. In addition, voltage transients on the AC power line may appear on the DC output. If this possibility exists, it is suggested that a clamp circuit be used.

2: This rating does not apply to the following pins: All USB DM/DP pins, **XTAL1/CLK_IN**, and **XTALO**

*Stresses exceeding those listed in this section could cause permanent damage to the device. This is a stress rating only. Exposure to absolute maximum rating conditions for extended periods may affect device reliability. Functional operation of the device at any condition exceeding those indicated in Section 9.2, Operating Conditions**, Section 9.5, DC Specifications, or any other applicable section of this specification is not implied.

9.2 Operating Conditions**

+1.2 V Supply Voltage (**VDD12**) ..... +1.08 V to +1.32 V

+3.3 V Supply Voltage (**VDD33**) ..... +3.0 V to +3.6 V

Input Signal Pins Voltage (Note 2) ..... -0.3 V to +3.6 V

XTALI/CLK_IN Voltage ..... -0.3 V to +3.6 V

USB 2.0 DP/DM Signal Pins Voltage ..... -0.3 V to +5.5 V

USB 3.2 Gen 1 **USB3UP_*xxxx*** and **USB3DN_*xxxx*** Signal Pins Voltage ..... -0.3 V to +1.32 V

Ambient Operating Temperature in Still Air (T_A) ..... Note 3

+1.2 V Supply Voltage Rise Time (T_{RT} in Figure 9-1) 5ms

+3.3 V Supply Voltage Rise Time (T_{RT} in Figure 9-1) 5ms

3: 0°C to +70°C for commercial version, -40°C to +85°C for industrial version.

**Proper operation of the device is ensured only within the ranges specified in this section.

Note:	Do not drive input signals without power supplied to the device.

FIGURE 9-1: SUPPLY RISE TIME MODEL

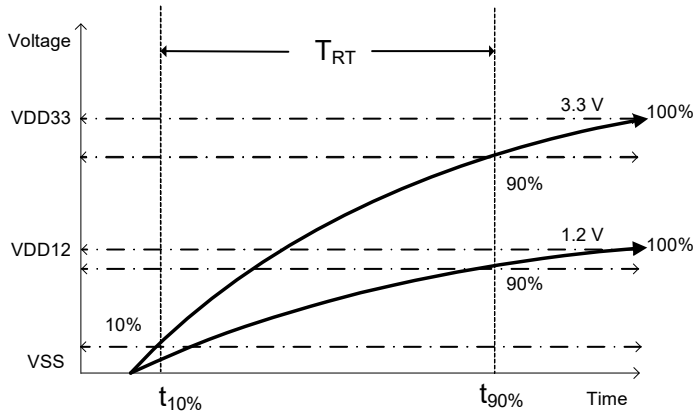

Note: The Power Supply Rise time requirement does not apply if the RESET_N signal is held low during power on and released after power levels rise and stabilize above the power on thresholds, or if the RESET_N signal is toggled after power supplies become stable.

9.3 Package Thermal Specifications

TABLE 9-1: PACKAGE THERMAL PARAMETERS

Symbol	°C/W	Velocity (Meters/s)
Θ_{JA}	19	0
	16	1
Ψ_{JT}	0.1	0
	0.1	1
Θ_{JC}	1.3	0
	1.3	1

Note: Thermal parameters are measured or estimated for devices in a multi-layer 2S2P PCB per JESDN51. For industrial applications, the USB7002 requires multi-layer 2S4P PCB power dissipation.

© 2018-2020 Microchip Technology Inc.

9.4 Power Consumption

This section details the power consumption of the device as measured during various modes of operation. Power dissipation is determined by temperature, supply voltage, and external source/sink requirements.

TABLE 9-2: DEVICE POWER CONSUMPTION

	Typical (mA)		Typical Power
	VDD12	VDD33	(mW)
Global Suspend	10	11	48.3
No VBUS	9	11	47.1
Reset/Standby	3	0	5
Idle	63	20	140
Active Idle	447	62	741
SuperSpeed Active Operation			
2 SuperSpeed Active Ports	465	56	743
1 SuperSpeed Active Port	358	44	576
Hi-Speed Active Operation			
4 Hi-Speed Active Ports	67	49	241
3 Hi-Speed Active Ports	66	41	215
2 Hi-Speed Active Ports	64	32	181
1 Hi-Speed Active Port	63	28	168
Full-Speed Active Operation			
4 Full-Speed Active Ports	62	31	178
3 Full-Speed Active Ports	62	30	174
2 Full-Speed Active Ports	62	30	173
1 Full-Speed Active Port	62	29	172
Mixed SuperSpeed / Hi-Speed Active Operation			
2 SS / 2 HS Active Ports	440	64	738

9.5 DC Specifications

TABLE 9-3: I/O DC ELECTRICAL CHARACTERISTICS

Parameter	Symbol	Min	Typical	Max	Units	Notes
I Type Input Buffer						
Low Input Level	V_{IL}			0.9V	V	
High Input Level	V_{IH}	1.25			V	
IS Type Input Buffer						
Low Input Level	V_{IL}			0.9V	V	
High Input Level	V_{IH}	1.25			V	
Schmitt Trigger Hysteresis (V_{IHT} - V_{ILT})	V_{HYS}	100	160	240	mV	
O12 Type Output Buffer						
Low Output Level	V_{OL}			0.4	V	I_{OL} = 12 mA
High Output Level	V_{OH}	**VDD33**-0.4			V	I_{OH} = -12 mA
OD12 Type Output Buffer						
Low Output Level	V_{OL}			0.4	V	I_{OL} = 12 mA
ICLK Type Input Buffer (XTALI Input)						Note 4
Low Input Level	V_{IL}			0.35	V	
High Input Level	V_{IH}	0.9		1.2	V	
IO-U Type Buffer **(**See Note 5**)**						Note 5

4: **XTALI** can optionally be driven from a 25 MHz singled-ended clock oscillator.

5: Refer to the USB 3.2 Gen 1 Specification for USB DC electrical characteristics.

© 2018-2020 Microchip Technology Inc.

9.6 AC Specifications

This section details the various AC timing specifications of the device.

9.6.1 POWER SUPPLY AND RESET_N SEQUENCE TIMING

Figure 9-2 illustrates the recommended power supply sequencing and timing for the device. **VDD33** should rise after or at the same rate as **VDD12**. Similarly, **RESET_N** and/or **VBUS_DET** should rise after or at the same rate as **VDD33**. **VBUS_DET** and **RESET_N** do not have any other timing dependencies.

FIGURE 9-2: POWER SUPPLY AND RESET_N SEQUENCE TIMING

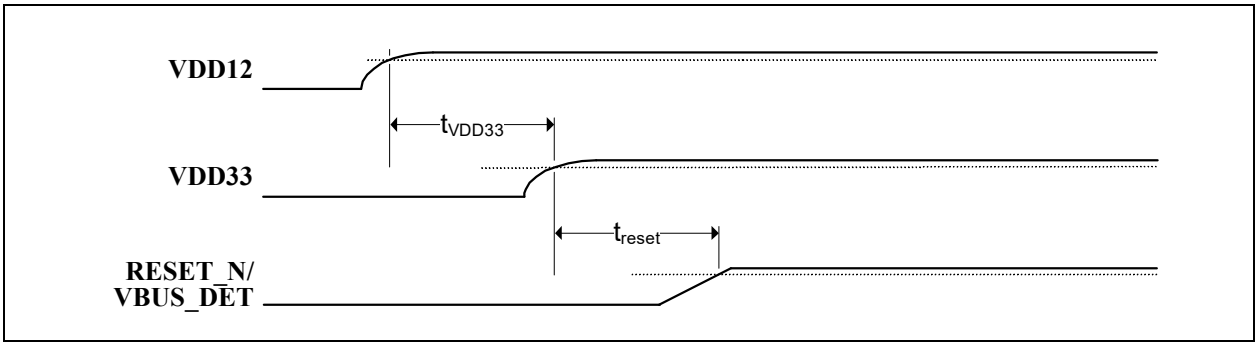

TABLE 9-4: POWER SUPPLY AND RESET_N SEQUENCE TIMING

Symbol	Description	Min	Typ	Max	Units
t_{VDD33}	**VDD12** to **VDD33** rise time	0			ms
t_{reset}	**VDD33** to **RESET_N/VBUS_DET** rise time	0			ms

9.6.2 POWER-ON AND CONFIGURATION STRAP TIMING

Figure 9-3 illustrates the configuration strap valid timing requirements in relation to power-on, for applications where **RESET_N** is not used at power-on. In order for valid configuration strap values to be read at power-on, the following timing requirements must be met. The operational levels (V_{opp}) for the external power supplies are detailed in Section 9.2, Operating Conditions**.

FIGURE 9-3: POWER-ON CONFIGURATION STRAP VALID TIMING

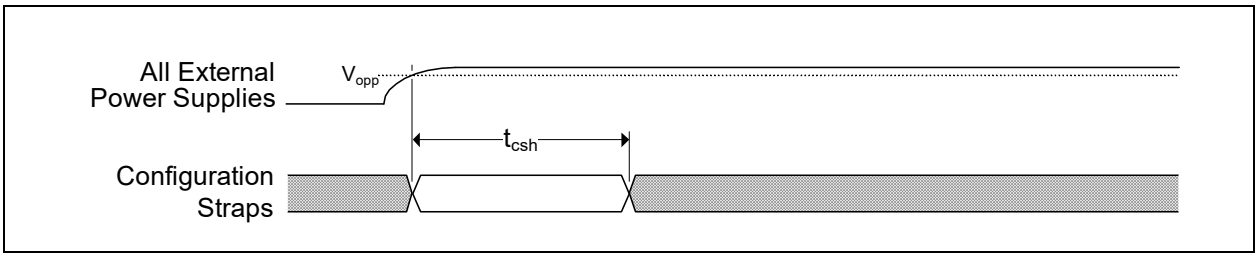

TABLE 9-5: POWER-ON CONFIGURATION STRAP LATCHING TIMING

Symbol	Description	Min	Typ	Max	Units
t_{csh}	Configuration strap hold after external power supplies at operational levels	1			ms

Device configuration straps are also latched as a result of **RESET_N** assertion. Refer to Section 9.6.3, Reset and Configuration Strap Timing for additional details.

9.6.3 RESET AND CONFIGURATION STRAP TIMING

Figure 9-4 illustrates the **RESET_N** pin timing requirements and its relation to the configuration strap pins. Assertion of **RESET_N** is not a requirement. However, if used, it must be asserted for the minimum period specified. Refer to Section 8.10, Resets for additional information on resets. Refer to Section 3.3, Configuration Straps and Programmable Functions for additional information on configuration straps.

FIGURE 9-4: RESET_N CONFIGURATION STRAP TIMING

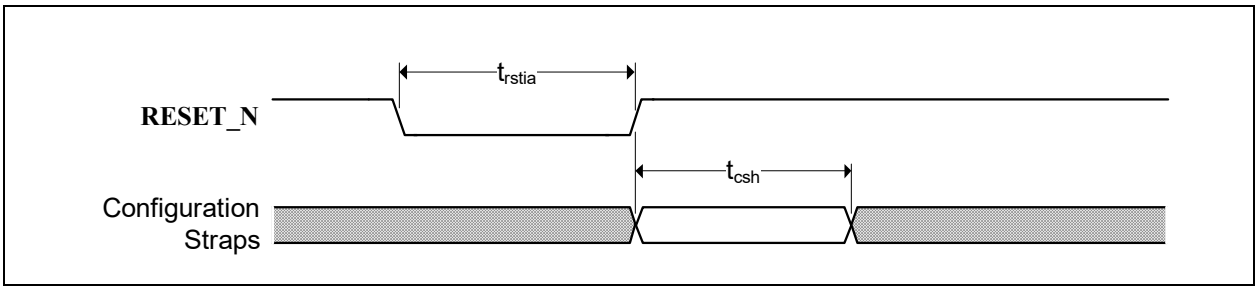

TABLE 9-6: RESET_N CONFIGURATION STRAP TIMING

Symbol	Description	Min	Typ	Max	Units
t_{rstia}	**RESET_N** input assertion time	5			µs
t_{csh}	Configuration strap pins hold after **RESET_N** deassertion	1			ms

Note: The clock input must be stable prior to **RESET_N** deassertion.

Configuration strap latching and output drive timings shown assume that the Power-On reset has finished first otherwise the timings in Section 9.6.2, Power-On and Configuration Strap Timing apply.

9.6.4 USB TIMING

All device USB signals conform to the voltage, power, and timing characteristics/specifications as set forth in the *Universal Serial Bus Specification*. Please refer to the *Universal Serial Bus Revision 3.2 Specification*, available at http://www.usb.org/developers/docs.

9.6.5 SMBUS TIMING

All device SMBus signals conform to the voltage, power, and timing characteristics/specifications as set forth in the *System Management Bus Specification.* Please refer to the *System Management Bus Specification*, Version 1.0, available at http://smbus.org/specs.

9.6.6 I²C TIMING

All device I²C signals conform to the 100KHz Standard-mode (Sm) and 400KHz Fast Mode (Fm) voltage, power, and timing characteristics/specifications as set forth in the *I²C-Bus Specification*. Please refer to the *I²C-Bus Specification*, available at http://www.nxp.com/documents/user_manual/UM10204.pdf.

9.6.7 I²S TIMING

All device I²S signals conform to the voltage, power, and timing characteristics/specifications as set forth in the I²S-Bus Specification. Please refer to the I²S-Bus Specification, available at http://www.nxp.com/acrobat_download/various/I2SBUS.pdf.

© 2018-2020 Microchip Technology Inc.

9.6.8 SPI/SQI MASTER TIMING

This section specifies the SPI/SQI master timing requirements for the device.

FIGURE 9-5: SPI/SQI MASTER TIMING

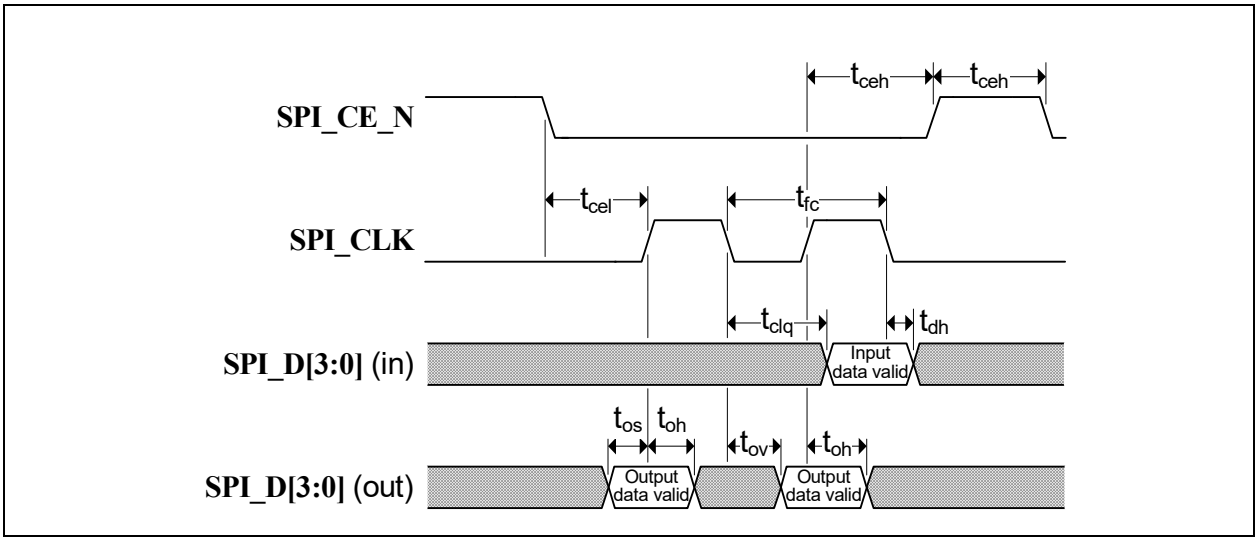

TABLE 9-7: SPI/SQI MASTER TIMING (30 MHZ OPERATION)

Symbol	Description	Min	Typ	Max	Units
t_{fc}	Clock frequency			30	MHz
t_{ceh}	Chip enable (**SPI_CE_N**) high time	100			ns
t_{clq}	Clock to input data			13	ns
t_{dh}	Input data hold time	0			ns
t_{os}	Output setup time	5			ns
t_{oh}	Output hold time	5			ns
t_{ov}	Clock to output valid	4			ns
t_{cel}	Chip enable (**SPI_CE_N**) low to first clock	12			ns
t_{ceh}	Last clock to chip enable (**SPI_CE_N**) high	12			ns

TABLE 9-8: SPI/SQI MASTER TIMING (60 MHZ OPERATION)

Symbol	Description	Min	Typ	Max	Units
t_{fc}	Clock frequency			60	MHz
t_{ceh}	Chip enable (**SPI_CE_N**) high time	50			ns
t_{clq}	Clock to input data			9	ns
t_{dh}	Input data hold time	0			ns
t_{os}	Output setup time	5			ns
t_{oh}	Output hold time	5			ns
t_{ov}	Clock to output valid	4			ns
t_{cel}	Chip enable (**SPI_CE_N**) low to first clock	12			ns
t_{ceh}	Last clock to chip enable (**SPI_CE_N**) high	12			ns

9.7 Clock Specifications

The device can accept either a 25MHz crystal or a 25MHz single-ended clock oscillator input. If the single-ended clock oscillator method is implemented, **XTALO** should be left unconnected and **XTALI/CLK_IN** should be driven with a nominal 0-3.3V clock signal. The input clock duty cycle is 40% minimum, 50% typical and 60% maximum.

It is recommended that a crystal utilizing matching parallel load capacitors be used for the crystal input/output signals (**XTALI/XTALO**). The following circuit design (Figure 9-6) and specifications (Table 9-9) are required to ensure proper operation.

FIGURE 9-6: 25MHZ CRYSTAL CIRCUIT

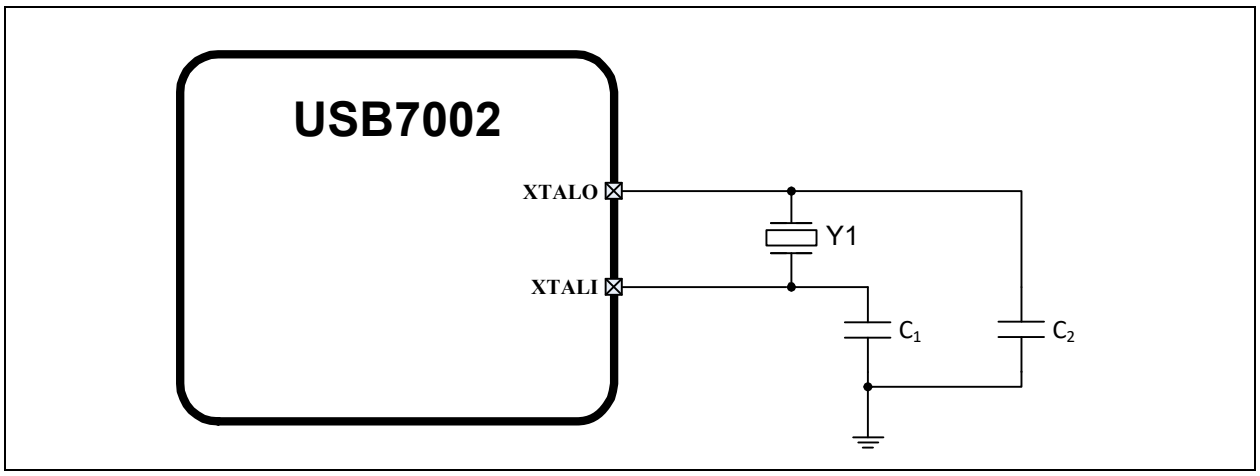

© 2018-2020 Microchip Technology Inc.

9.7.1 CRYSTAL SPECIFICATIONS

It is recommended that a crystal utilizing matching parallel load capacitors be used for the crystal input/output signals (**XTALI/XTALO**). Refer to Table 9-9 for the recommended crystal specifications.

TABLE 9-9: CRYSTAL SPECIFICATIONS

Parameter	Symbol	Min	Nom	Max	Units	Notes
Crystal Cut			AT, typ			
Crystal Oscillation Mode			Fundamental Mode			
Crystal Calibration Mode			Parallel Resonant Mode			
Frequency	F_{fund}	-	25.000	-	MHz	
Frequency Tolerance @ 25°C	F_{tol}	-	-	±50	PPM	
Frequency Stability Over Temp	F_{temp}	-	-	±50	PPM	
Frequency Deviation Over Time	F_{age}	-	±3 to 5	-	PPM	Note 6
Total Allowable PPM Budget		-	-	±100	PPM	
Shunt Capacitance	C_O	-	7 typ	-	pF	
Load Capacitance	C_L	-	20 typ	-	pF	
Drive Level	P_W	100	-	-	uW	
Equivalent Series Resistance	R_1	-	-	60	Ω	
Operating Temperature Range		Note 7	-	Note 8	°C	
XTALI/CLK_IN Pin Capacitance		-	3 typ	-	pF	Note 9
XTALO Pin Capacitance		-	3 typ	-	pF	Note 9

6: Frequency Deviation Over Time is also referred to as Aging.

7: 0 °C for commercial version, -40 °C for industrial version.

8: +70 °C for commercial version, +85 °C for industrial version.

9: This number includes the pad, the bond wire and the lead frame. PCB capacitance is not included in this value. The **XTALI/CLK_IN** pin, **XTALO** pin and PCB capacitance values are required to accurately calculate the value of the two external load capacitors. These two external load capacitors determine the accuracy of the 25.000 MHz frequency.

9.7.2 EXTERNAL REFERENCE CLOCK (CLK_IN)

When using an external reference clock, the following input clock specifications are suggested:

- 25 MHz
- 50% duty cycle ±10%, ±100 ppm
- Jitter < 100 ps RMS

10.0 PACKAGE OUTLINE

Note: For the most current package drawings, see the Microchip Packaging Specification at: http://www.microchip.com/packaging.

FIGURE 10-1: 100-VQFN PACKAGE (DRAWING)

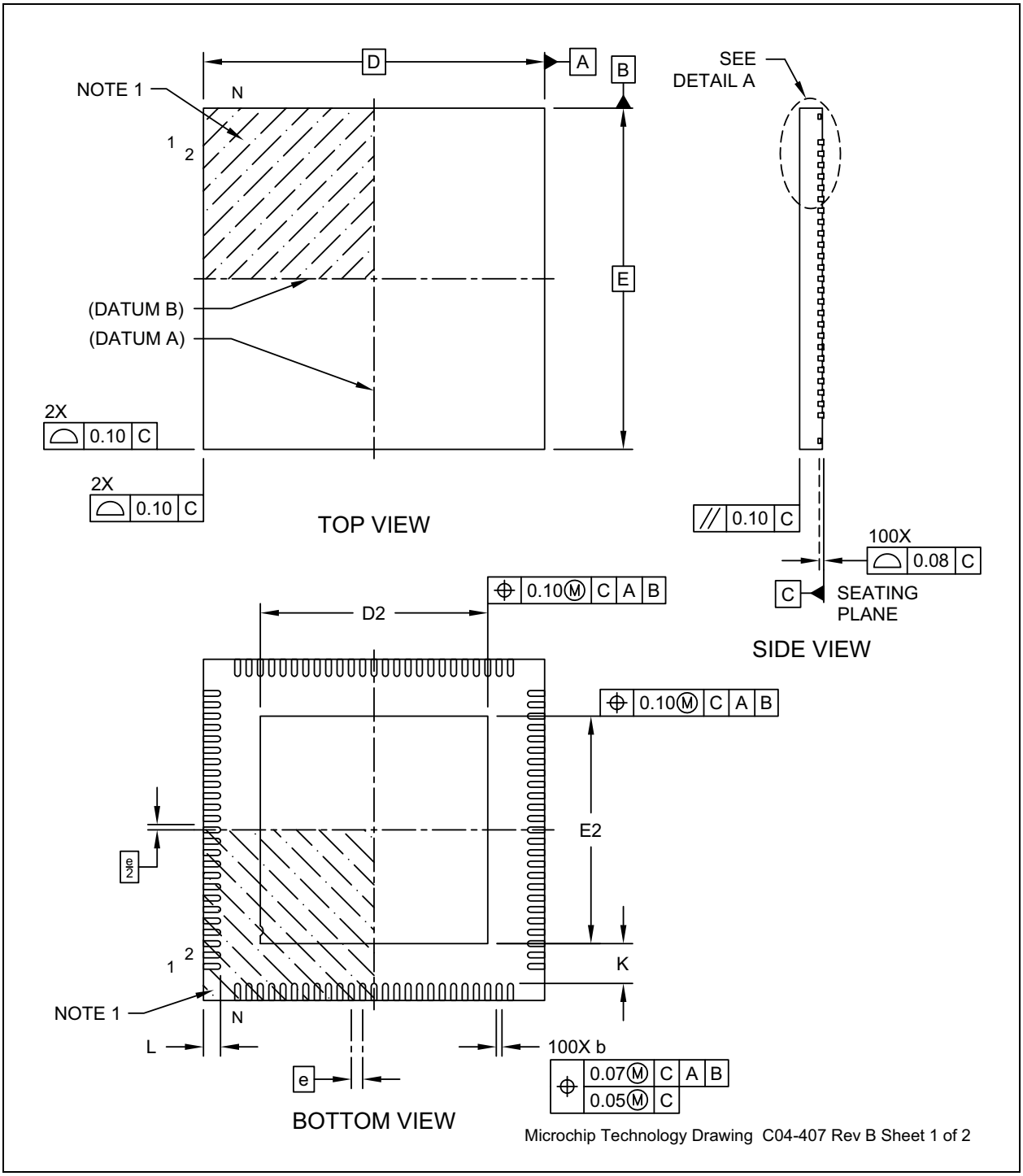

© 2018-2020 Microchip Technology Inc.

Note: For the most current package drawings, see the Microchip Packaging Specification at: http://www.microchip.com/packaging.

FIGURE 10-2: 100-VQFN PACKAGE (DIMENSIONS)

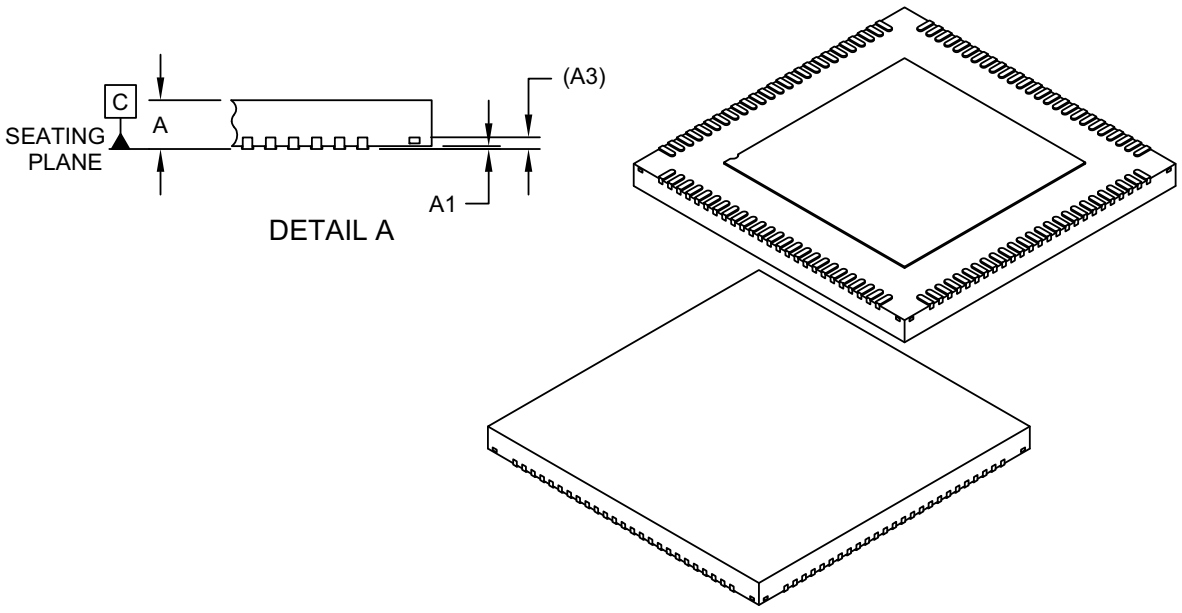

Units		MILLIMETERS		
Dimension Limits		MIN	NOM	MAX
Number of Terminals	N		100	
Pitch	e		0.40 BSC	
Overall Height	A	0.80	0.85	0.90
Standoff	A1	0.00	0.02	0.05
Terminal Thickness	A3		0.203 REF	
Overall Length	D		12.00 BSC	
Exposed Pad Length	D2	7.90	8.00	8.10
Overall Width	E		12.00 BSC	
Exposed Pad Width	E2	7.90	8.00	8.10
Terminal Width	b	0.15	0.20	0.25
Terminal Length	L	0.50	0.60	0.70
Terminal-to-Exposed-Pad	K	1.30	-	-

Notes:

1. Pin 1 visual index feature may vary, but must be located within the hatched area.
2. Package is saw singulated
3. Dimensioning and tolerancing per ASME Y14.5M

   BSC: Basic Dimension. Theoretically exact value shown without tolerances.

   REF: Reference Dimension, usually without tolerance, for information purposes only.

Microchip Technology Drawing C04-407 Rev B Sheet 2 of 2

Note: For the most current package drawings, see the Microchip Packaging Specification at: http://www.microchip.com/packaging.

FIGURE 10-3: 100-VQFN PACKAGE (LAND-PATTERN)

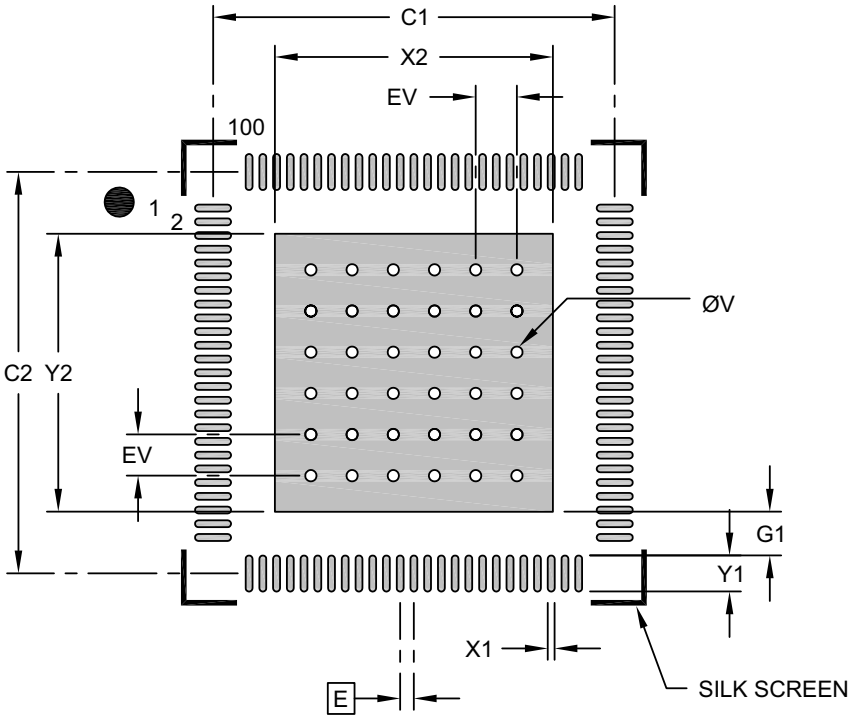

RECOMMENDED LAND PATTERN

Units		MILLIMETERS		
Dimension Limits		MIN	NOM	MAX
Contact Pitch	E		0.40 BSC	
Optional Center Pad Width	X2			8.10
Optional Center Pad Length	Y2			8.10
Contact Pad Spacing	C1		11.70	
Contact Pad Spacing	C2		11.70	
Contact Pad Width (X100)	X1			0.20
Contact Pad Length (X100)	Y1			1.05
Contact Pad to Center Pad (X100)	G1	0.20		
Thermal Via Diameter	V		0.33	
Thermal Via Pitch	EV		1.20	

Notes:

1. Dimensioning and tolerancing per ASME Y14.5M
   BSC: Basic Dimension. Theoretically exact value shown without tolerances.
2. For best soldering results, thermal vias, if used, should be filled or tented to avoid solder loss during reflow process

Microchip Technology Drawing C04-2407A

© 2018-2020 Microchip Technology Inc.

APPENDIX A: DATA SHEET REVISION HISTORY

TABLE A-1: REVISION HISTORY

Revision Level & Date	Section/Figure/Entry	Correction
DS00002670F (08-03-20)	USB Implementation Forum numbering update: “USB 3.1” changed to “USB 3.2”; title modified.	
	Section 3.1, Pin Assignments	Pin reset states added to table.
	Section 9.0, Operational Characteristics	Note added following Figure 9-1: “The Power Supply Rise time requirement does not apply if the RESET_N signal is held low during power on and released after power levels rise and stabilize above the power on thresholds, or if the RESET_N signal is toggled after power supplies become stable.”
	Section 9.2, Operating Conditions**	• +1.2 V Supply Voltage Rise Time > Increased from 400us to 5ms • +3.3 V Supply Voltage Rise Time > Increased from 400us to 5ms
	Table 9-3, "I/O DC Electrical Characteristics"	Note 4 deleted, replaced with 0.9V in both instances.
DS00002670E (04-02-20)	• Sales Listing page updated • Chapter 3, Revision Level in footer corrected • Trademark symbol corrected	
DS00002670D (08-13-19)	Section 2.1, General Description Document Title Key Benefits on cover	• Updated last sentence of the first paragraph for greater clarity. • Title modified changing “Controller” to “PD Smart” • “USB Power Delivery Billboard Device Support” bullet removed • Added TID data
	Table 3-5, Table 3-6	• Changed PF15 from PRT_CTL3 to PRT_CTL2 • Changed PF16 from PRT_CTL2 to PRT_CTL3 • Updated programmable functions descriptions table to match new assigned PRT_CTLx and PRT_CTLx_U3 numbers.
	Section 3.4, Physical and Logical Port Mapping	Added new section with physical and logical port mapping.
	Figure 2-1	Updated internal PHY numbering to match physical port numbering detailed in new Section 3.4, Physical and Logical Port Mapping.
	Figure 4-3, SMBus/I2C Connections	Updated suggested nominal external resistor values. Added note under figure: “Resistor values detailed in Figure 4-3 are suggestions. Optimal pull-up values may vary dependent on external factors.”
	Section 5.1.5, SMBus Check Stage (SMBUS_CHECK)	Updated second sentence: “If pull-ups are detected on both pins...”
DS00002670C (02-20-19)	All	Public Release
DS00002670B (09-07-18)	All	Initial Release

PRODUCT IDENTIFICATION SYSTEM

To order or obtain information, e.g., on pricing or delivery, refer to the factory or the listed sales office.

PART NO.	[X](1)	-	[X]	/	XXX	XXX
Device	Tape and Reel Option		Temperature Range		Package	Automotive Code

Device:	USB7002	
Tape and Reel Option:	Blank T	= Standard packaging (tray) = Tape and Reel (Note 1)
Temperature Range:	Blank I	= 0°C to +70°C (Commercial) = -40°C to +85°C (Industrial/Automotive Grade 3)
Package:	KDX	= 100-pin VQFN
Automotive Code:	Vxx	= 3 character code with “V” prefix, specifying automotive product.

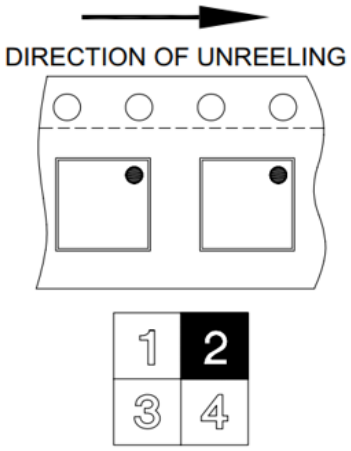

Examples:

a) USB7002/KDX
Tray, 0°C to +70°C, 100-pin VQFN

b) USB7002T/KDX
Tape & reel, 0°C to +70°C, 100-pin VQFN

c) USB7002-I/KDX
Tray, -40°C to +85°C, 100-pin VQFN

d) USB7002T-I/KDX
Tape & reel, -40°C to +85°C, 100-pin VQFN

e) USB7002-I/KDXVAO
Tray, -40°C to +85°C, Automotive Grade 3, 100-pin VQFN

f) USB7002T-I/KDXVAO
Tape & reel, -40°C to +85°C, Automotive Grade 3, 100-pin VQFN

Note 1: Tape and Reel identifier only appears in the catalog part number description. This identifier is used for ordering purposes and is not printed on the device package. Check with your Microchip Sales Office for package availability with the Tape and Reel option.

© 2018-2020 Microchip Technology Inc.

THE MICROCHIP WEB SITE

Microchip provides online support via our WWW site at www.microchip.com. This web site is used as a means to make files and information easily available to customers. Accessible by using your favorite Internet browser, the web site contains the following information:

- **Product Support** – Data sheets and errata, application notes and sample programs, design resources, user's guides and hardware support documents, latest software releases and archived software
- **General Technical Support** – Frequently Asked Questions (FAQ), technical support requests, online discussion groups, Microchip consultant program member listing
- **Business of Microchip** – Product selector and ordering guides, latest Microchip press releases, listing of seminars and events, listings of Microchip sales offices, distributors and factory representatives

CUSTOMER CHANGE NOTIFICATION SERVICE

Microchip's customer notification service helps keep customers current on Microchip products. Subscribers will receive e-mail notification whenever there are changes, updates, revisions or errata related to a specified product family or development tool of interest.

To register, access the Microchip web site at www.microchip.com. Under "Support", click on "Customer Change Notification" and follow the registration instructions.

CUSTOMER SUPPORT

Users of Microchip products can receive assistance through several channels:

- Distributor or Representative
- Local Sales Office
- Field Application Engineer (FAE)
- Technical Support

Customers should contact their distributor, representative or Field Application Engineer (FAE) for support. Local sales offices are also available to help customers. A listing of sales offices and locations is included in the back of this document.

Technical support is available through the web site at: http://microchip.com/support

Note the following details of the code protection feature on Microchip devices:

- Microchip products meet the specification contained in their particular Microchip Data Sheet.
- Microchip believes that its family of products is one of the most secure families of its kind on the market today, when used in the intended manner and under normal conditions.
- There are dishonest and possibly illegal methods used to breach the code protection feature. All of these methods, to our knowledge, require using the Microchip products in a manner outside the operating specifications contained in Microchip's Data Sheets. Most likely, the person doing so is engaged in theft of intellectual property.
- Microchip is willing to work with the customer who is concerned about the integrity of their code.
- Neither Microchip nor any other semiconductor manufacturer can guarantee the security of their code. Code protection does not mean that we are guaranteeing the product as "unbreakable."

Code protection is constantly evolving. We at Microchip are committed to continuously improving the code protection features of our products. Attempts to break Microchip's code protection feature may be a violation of the Digital Millennium Copyright Act. If such acts allow unauthorized access to your software or other copyrighted work, you may have a right to sue for relief under that Act.

Information contained in this publication regarding device applications and the like is provided only for your convenience and may be superseded by updates. It is your responsibility to ensure that your application meets with your specifications. MICROCHIP MAKES NO REPRESENTATIONS OR WARRANTIES OF ANY KIND WHETHER EXPRESS OR IMPLIED, WRITTEN OR ORAL, STATUTORY OR OTHERWISE, RELATED TO THE INFORMATION, INCLUDING BUT NOT LIMITED TO ITS CONDITION, QUALITY, PERFORMANCE, MERCHANTABILITY OR FITNESS FOR PURPOSE**.** Microchip disclaims all liability arising from this information and its use. Use of Microchip devices in life support and/or safety applications is entirely at the buyer's risk, and the buyer agrees to defend, indemnify and hold harmless Microchip from any and all damages, claims, suits, or expenses resulting from such use. No licenses are conveyed, implicitly or otherwise, under any Microchip intellectual property rights unless otherwise stated.

Trademarks

The Microchip name and logo, the Microchip logo, Adaptec, AnyRate, AVR, AVR logo, AVR Freaks, BesTime, BitCloud, chipKIT, chipKIT logo, CryptoMemory, CryptoRF, dsPIC, FlashFlex, flexPWR, HELDO, IGLOO, JukeBlox, KeeLoq, Kleer, LANCheck, LinkMD, maXStylus, maXTouch, MediaLB, megaAVR, Microsemi, Microsemi logo, MOST, MOST logo, MPLAB, OptoLyzer, PackeTime, PIC, picoPower, PICSTART, PIC32 logo, PolarFire, Prochip Designer, QTouch, SAM-BA, SenGenuity, SpyNIC, SST, SST Logo, SuperFlash, Symmetricom, SyncServer, Tachyon, TempTrackr, TimeSource, tinyAVR, UNI/O, Vectron, and XMEGA are registered trademarks of Microchip Technology Incorporated in the U.S.A. and other countries.

APT, ClockWorks, The Embedded Control Solutions Company, EtherSynch, FlashTec, Hyper Speed Control, HyperLight Load, IntelliMOS, Libero, motorBench, mTouch, Powermite 3, Precision Edge, ProASIC, ProASIC Plus, ProASIC Plus logo, Quiet-Wire, SmartFusion, SyncWorld, Temux, TimeCesium, TimeHub, TimePictra, TimeProvider, Vite, WinPath, and ZL are registered trademarks of Microchip Technology Incorporated in the U.S.A.

Adjacent Key Suppression, AKS, Analog-for-the-Digital Age, Any Capacitor, AnyIn, AnyOut, BlueSky, BodyCom, CodeGuard, CryptoAuthentication, CryptoAutomotive, CryptoCompanion, CryptoController, dsPICDEM, dsPICDEM.net, Dynamic Average Matching, DAM, ECAN, EtherGREEN, In-Circuit Serial Programming, ICSP, INICnet, Inter-Chip Connectivity, JitterBlocker, KleerNet, KleerNet logo, memBrain, Mindi, MiWi, MPASM, MPF, MPLAB Certified logo, MPLIB, MPLINK, MultiTRAK, NetDetach, Omniscient Code Generation, PICDEM, PICDEM.net, PICkit, PICtail, PowerSmart, PureSilicon, QMatrix, REAL ICE, Ripple Blocker, SAM-ICE, Serial Quad I/O, SMART-I.S., SQI, SuperSwitcher, SuperSwitcher II, Total Endurance, TSHARC, USBCheck, VariSense, ViewSpan, WiperLock, Wireless DNA, and ZENA are trademarks of Microchip Technology Incorporated in the U.S.A. and other countries.

SQTP is a service mark of Microchip Technology Incorporated in the U.S.A.
The Adaptec logo, Frequency on Demand, Silicon Storage Technology, and Symmcom are registered trademarks of Microchip Technology Inc. in other countries.
GestIC is a registered trademark of Microchip Technology Germany II GmbH & Co. KG, a subsidiary of Microchip Technology Inc., in other countries.

All other trademarks mentioned herein are property of their respective companies.

© 2018-2020, Microchip Technology Incorporated, All Rights Reserved.

ISBN: 9781522463245

For information regarding Microchip's Quality Management Systems, please visit www.microchip.com/quality.

© 2018-2020 Microchip Technology Inc.

Worldwide Sales and Service

AMERICAS

Corporate Office
2355 West Chandler Blvd.
Chandler, AZ 85224-6199
Tel: 480-792-7200
Fax: 480-792-7277
Technical Support:
http://www.microchip.com/support
Web Address:
www.microchip.com

Atlanta
Duluth, GA
Tel: 678-957-9614
Fax: 678-957-1455

Austin, TX
Tel: 512-257-3370

Boston
Westborough, MA
Tel: 774-760-0087
Fax: 774-760-0088

Chicago
Itasca, IL
Tel: 630-285-0071
Fax: 630-285-0075

Dallas
Addison, TX
Tel: 972-818-7423
Fax: 972-818-2924

Detroit
Novi, MI
Tel: 248-848-4000

Houston, TX
Tel: 281-894-5983

Indianapolis
Noblesville, IN
Tel: 317-773-8323
Fax: 317-773-5453
Tel: 317-536-2380

Los Angeles
Mission Viejo, CA
Tel: 949-462-9523
Fax: 949-462-9608
Tel: 951-273-7800

Raleigh, NC
Tel: 919-844-7510

New York, NY
Tel: 631-435-6000

San Jose, CA
Tel: 408-735-9110
Tel: 408-436-4270

Canada - Toronto
Tel: 905-695-1980
Fax: 905-695-2078

ASIA/PACIFIC

Australia - Sydney
Tel: 61-2-9868-6733

China - Beijing
Tel: 86-10-8569-7000

China - Chengdu
Tel: 86-28-8665-5511

China - Chongqing
Tel: 86-23-8980-9588

China - Dongguan
Tel: 86-769-8702-9880

China - Guangzhou
Tel: 86-20-8755-8029

China - Hangzhou
Tel: 86-571-8792-8115

China - Hong Kong SAR
Tel: 852-2943-5100

China - Nanjing
Tel: 86-25-8473-2460

China - Qingdao
Tel: 86-532-8502-7355

China - Shanghai
Tel: 86-21-3326-8000

China - Shenyang
Tel: 86-24-2334-2829

China - Shenzhen
Tel: 86-755-8864-2200

China - Suzhou
Tel: 86-186-6233-1526

China - Wuhan
Tel: 86-27-5980-5300

China - Xian
Tel: 86-29-8833-7252

China - Xiamen
Tel: 86-592-2388138

China - Zhuhai
Tel: 86-756-3210040

ASIA/PACIFIC

India - Bangalore
Tel: 91-80-3090-4444

India - New Delhi
Tel: 91-11-4160-8631

India - Pune
Tel: 91-20-4121-0141

Japan - Osaka
Tel: 81-6-6152-7160

Japan - Tokyo
Tel: 81-3-6880- 3770

Korea - Daegu
Tel: 82-53-744-4301

Korea - Seoul
Tel: 82-2-554-7200

Malaysia - Kuala Lumpur
Tel: 60-3-7651-7906

Malaysia - Penang
Tel: 60-4-227-8870

Philippines - Manila
Tel: 63-2-634-9065

Singapore
Tel: 65-6334-8870

Taiwan - Hsin Chu
Tel: 886-3-577-8366

Taiwan - Kaohsiung
Tel: 886-7-213-7830

Taiwan - Taipei
Tel: 886-2-2508-8600

Thailand - Bangkok
Tel: 66-2-694-1351

Vietnam - Ho Chi Minh
Tel: 84-28-5448-2100

EUROPE

Austria - Wels
Tel: 43-7242-2244-39
Fax: 43-7242-2244-393

Denmark - Copenhagen
Tel: 45-4485-5910
Fax: 45-4485-2829

Finland - Espoo
Tel: 358-9-4520-820

France - Paris
Tel: 33-1-69-53-63-20
Fax: 33-1-69-30-90-79

Germany - Garching
Tel: 49-8931-9700

Germany - Haan
Tel: 49-2129-3766400

Germany - Heilbronn
Tel: 49-7131-72400

Germany - Karlsruhe
Tel: 49-721-625370

Germany - Munich
Tel: 49-89-627-144-0
Fax: 49-89-627-144-44

Germany - Rosenheim
Tel: 49-8031-354-560

Israel - Ra'anana
Tel: 972-9-744-7705

Italy - Milan
Tel: 39-0331-742611
Fax: 39-0331-466781

Italy - Padova
Tel: 39-049-7625286

Netherlands - Drunen
Tel: 31-416-690399
Fax: 31-416-690340

Norway - Trondheim
Tel: 47-7288-4388

Poland - Warsaw
Tel: 48-22-3325737

Romania - Bucharest
Tel: 40-21-407-87-50

Spain - Madrid
Tel: 34-91-708-08-90
Fax: 34-91-708-08-91

Sweden - Gothenberg
Tel: 46-31-704-60-40

Sweden - Stockholm
Tel: 46-8-5090-4654

UK - Wokingham
Tel: 44-118-921-5800
Fax: 44-118-921-5820

© 2018-2020 Microchip Technology Inc.