IGBT Modules in ECO-PAC 2

Short Circuit SOA Capability
Square RBSOA

I_{C25} = 30 A
V_{CES} = 1200 V
$V_{CE(sat)\ typ.}$ = 2.6 V

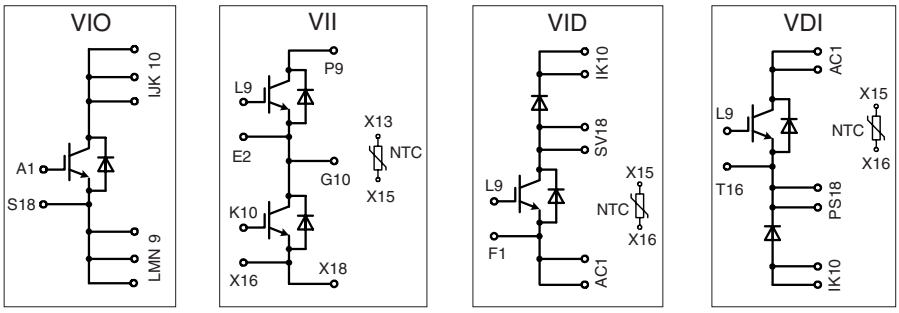

Pin arangement see outlines

IGBTs

Symbol	Conditions	Maximum Ratings	
V_{CES}	T_{VJ} = 25°C to 150°C	1200	V
V_{GES}		± 20	V
I_{C25}	T_C = 25°C	30	A
I_{C80}	T_C = 80°C	21	A
I_{CM}	V_{GE} = ±15 V; R_G = 82 Ω; T_{VJ} = 125°C	35	A
V_{CEK}	RBSOA, Clamped inductive load; L = 100 µH	V_{CES}	
t_{SC} (SCSOA)	V_{CE} = V_{CES}; V_{GE} = ±15 V; R_G = 82 Ω; T_{VJ} = 125°C non-repetitive	10	µs
P_{tot}	T_C = 25°C	130	W

Symbol	Conditions	Characteristic Values (T_{VJ} = 25°C, unless otherwise specified) min.	typ.	max.	
$V_{CE(sat)}$	I_C = 25 A; V_{GE} = 15 V; T_{VJ} = 25°C		2.6	3.3	V
	T_{VJ} = 125°C		2.9		V
$V_{GE(th)}$	I_C = 0.6 mA; V_{GE} = V_{CE}	4.5		6.5	V
I_{CES}	V_{CE} = V_{CES}; V_{GE} = 0 V; T_{VJ} = 25°C			0.9	mA
	T_{VJ} = 125°C			3.7	mA
I_{GES}	V_{CE} = 0 V; V_{GE} = ± 20 V			100	nA
$t_{d(on)}$	Inductive load, T_{VJ} = 125°C		100		ns
t_r	V_{CE} = 600 V; I_C = 17.5 A		75		ns
$t_{d(off)}$	V_{GE} = 15/0 V; R_G = 82 Ω		500		ns
t_f			70		ns
E_{on}			2.7		mJ
E_{off}			2.1		mJ
C_{ies}	V_{CE} = 25 V; V_{GE} = 0 V; f = 1 MHz		1		nF
R_{thJC}	(per IGBT)			0.96	K/W
R_{thJH}	with heatsink compound (0.42 K/m.K; 50 µm)		1.92		K/W

Features

- NPT IGBT's
  - positive temperature coefficient of saturation voltage
  - fast switching
- FRED diodes
  - fast reverse recovery
  - low forward voltage
- Industry Standard Package
  - solderable pins for PCB mounting
  - isolated DCB ceramic base plate

Advantages

- space and weight savings
- reduced protection circuits
- leads with expansion bend for stress relief

Typical Applications

- AC and DC motor control
- AC servo and robot drives
- power supplies
- welding inverters

Recommended replacement: Please contact your local sales office

NOT FOR NEW DESIGN

IXYS reserves the right to change limits, test conditions and dimensions.

0650

© 2006 IXYS All rights reserved

Reverse diodes (FRED)

Symbol	Conditions	Maximum Ratings	
I_{F25}	T_C = 25°C	26	A
I_{F80}	T_C = 80°C	17	A

Symbol	Conditions	Characteristic Values min.	typ.	max.	
V_F	I_F = 17.5 A; T_{VJ} = 25°C		2.48	2.79	V
	T_{VJ} = 125°C		1.84		V
I_{RM}	I_F = 15 A; di_F/dt = 400 A/µs; T_{VJ} = 125°C		16		A
t_{rr}	V_R = 600 V; V_{GE} = 0 V		130		ns
R_{thJC}				2.3	K/W
R_{thJH}	with heatsink compound (0.42 K/m.K; 50 µm)		4.6		K/W

Temperature Sensor NTC

Symbol	Conditions	Characteristic Values min.	typ.	max.	
R_{25}	T = 25°C	4.75	5.0	5.25	kΩ
$B_{25/50}$			3375		K

Module

Symbol	Conditions	Maximum Ratings	
T_{VJ}		-40...+150	°C
T_{stg}		-40...+150	°C
V_{ISOL}	$I_{ISOL} \leq$ 1 mA; 50/60 Hz	3000	V~
M_d	mounting torque (M4)	1.5 - 2.0	Nm
		14 - 18	lb.in.
a	Max. allowable acceleration	50	m/s^2

Symbol	Conditions	Characteristic Values min.	typ.	max.	
d_S	Creepage distance on surface (Pin to heatsink)	11.2			mm
d_A	Strike distance in air (Pin to heatsink)	11.2			mm
Weight			24		g

Data according to IEC 60747 and refer to a single transistor or diode unless otherwise stated.

VII

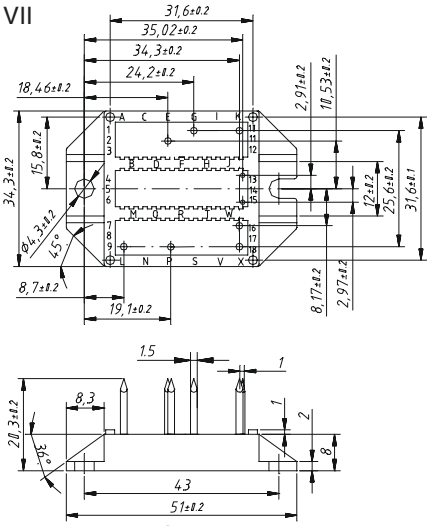

VIO

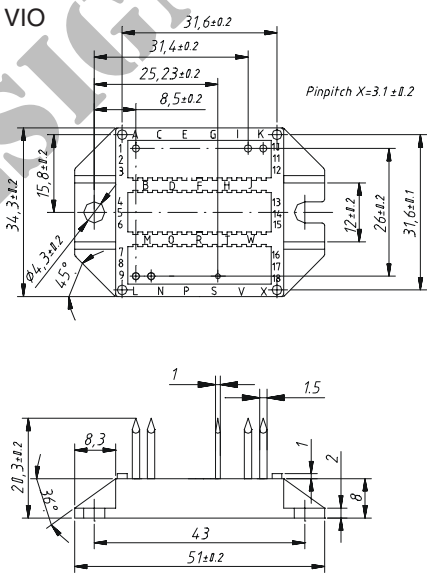

VID

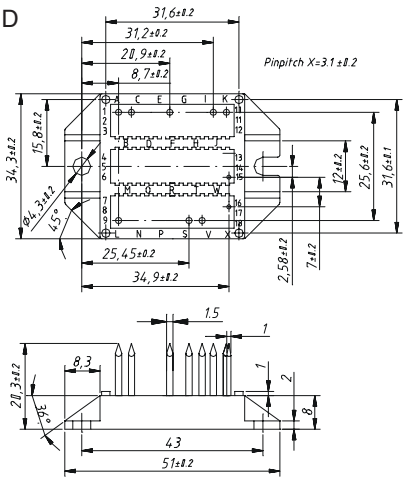

VDI

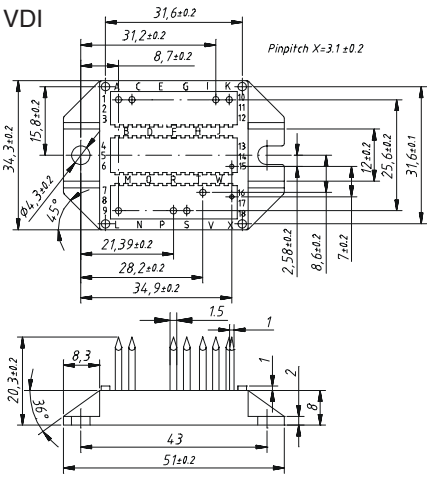

NOT FOR NEW DESIGN

IXYS reserves the right to change limits, test conditions and dimensions.

0650

© 2006 IXYS All rights reserved

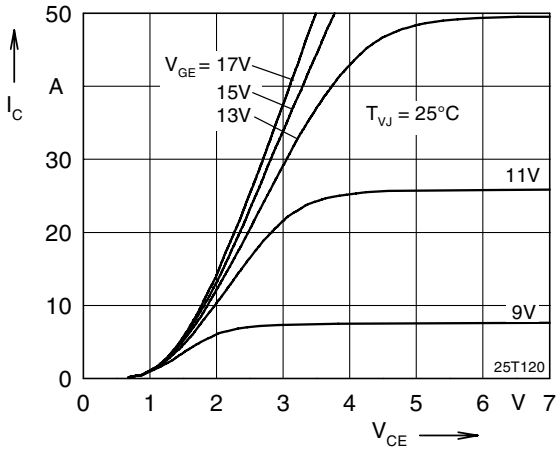

Fig. 1 Typ. output characteristics

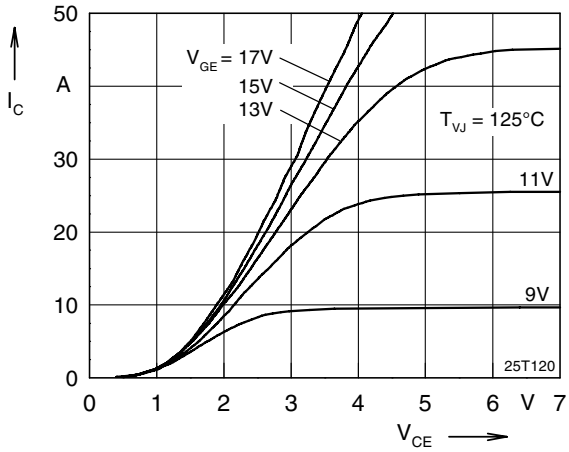

Fig. 2 Typ. output characteristics

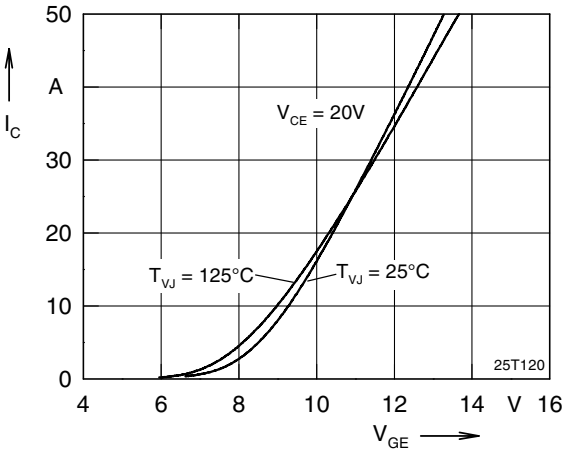

Fig. 3 Typ. transfer characteristics

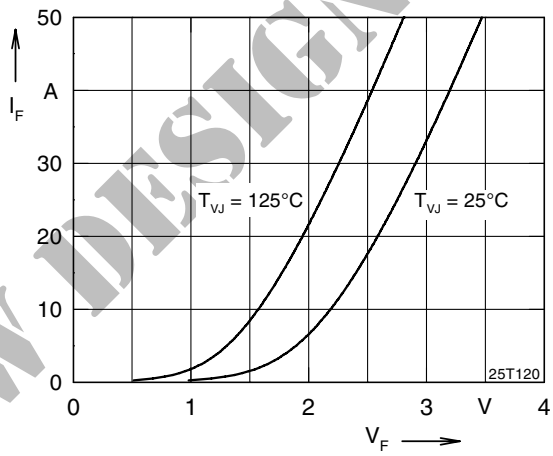

Fig. 4 Typ. forward characteristics of free wheeling diode

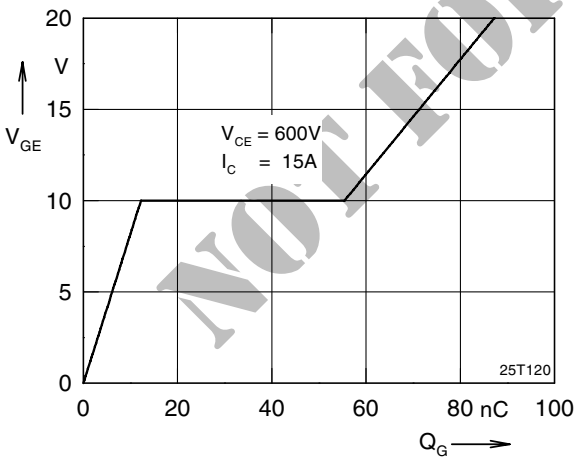

Fig. 5 Typ. turn on gate charge

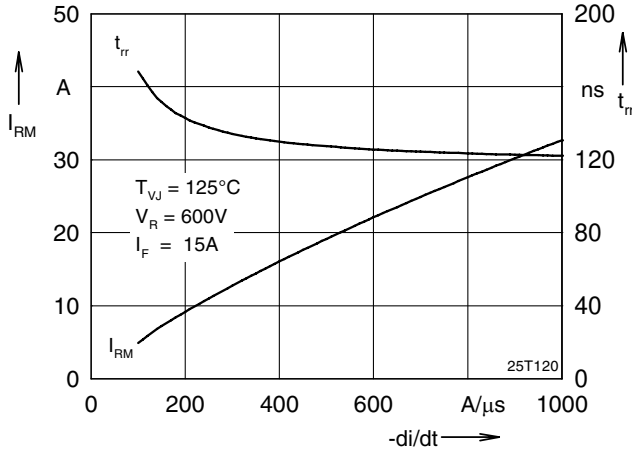

Fig. 6 Typ. turn off characteristics of free wheeling diode

NOT FOR NEW DESIGN

IXYS reserves the right to change limits, test conditions and dimensions.
0650
© 2006 IXYS All rights reserved

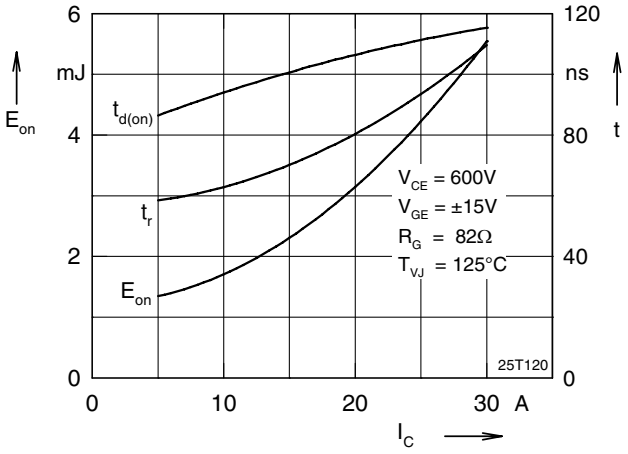

Fig. 7 Typ. turn on energy and switching

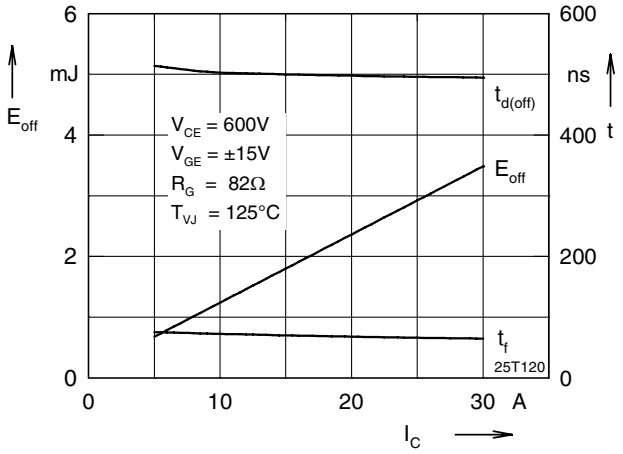

Fig. 8 Typ. turn off energy and switching times versus collector current

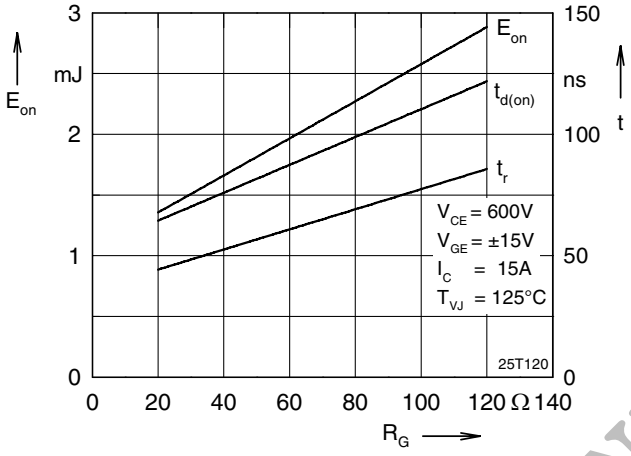

Fig. 9 Typ. turn on energy and switching

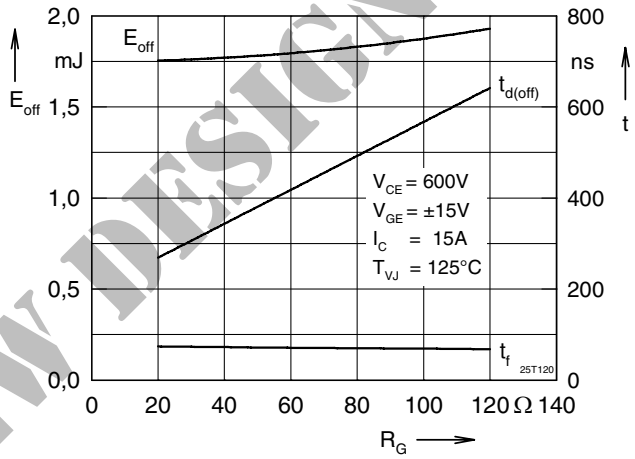

Fig. 10 Typ. turn off energy and switching times versus gate resistor

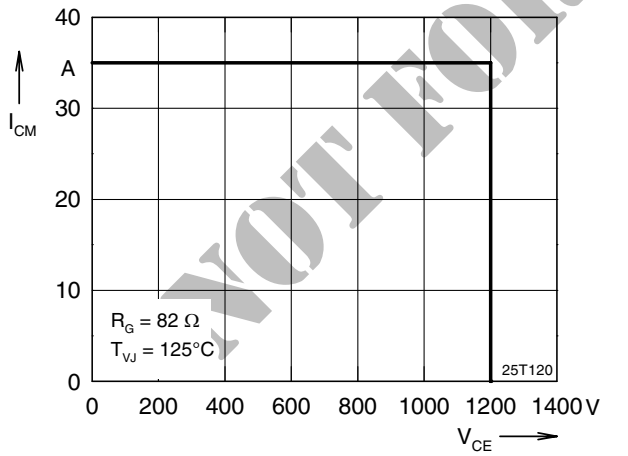

Fig. 11 Reverse biased safe operating area

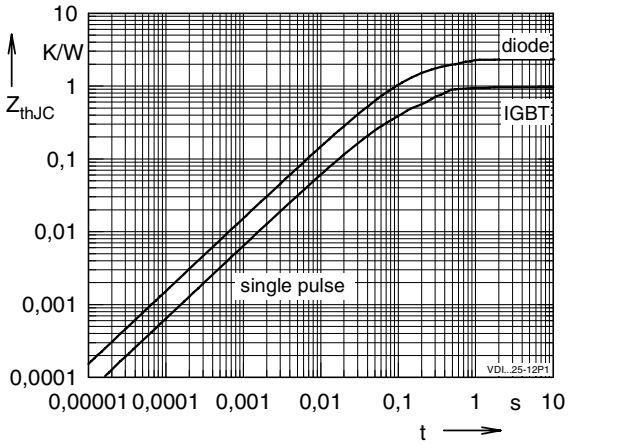

Fig. 12 Typ. transient thermal impedance RBSOA

NOT FOR NEW DESIGN

IXYS reserves the right to change limits, test conditions and dimensions.

© 2006 IXYS All rights reserved