GENERAL DESCRIPTION

The VA1200 is the world's first piezoelectric MEMS voice accelerometer. The VA1200 can be used to pick up the wearer's own voice through bone conduction. Using the VA1200 voice accelerometer in conjunction with a standard microphone, the application can achieve superior background and wind noise reduction.

The VA1200 has an ultra-small 2.9 mm X 2.76 mm X 0.9 mm package and is solder reflow compatible with no sensitivity degradation. It operates in environmentally harsh surroundings because it is dust and moisture resistant.

FEATURES

- Provides superior background and wind noise reduction
- Small Footprint – 2.9mm x 2.76 mm x 0.9mm
- Single Ended Analog Output
- High Frequency Bandwidth for user voice pickup

APPLICATIONS

- Truly Wireless Stereo (TWS) Headphones
- Background and Wind Noise Reduction
- Headsets
- Neckbands
- Earbuds
- Headsets / Hearables / Wearables

ORDERING INFORMATION

Product	Package Description	Quantity
VA1200AA	13" Tape and Reel	5,000



See Lid Marking Section for actual marking

BLOCK DIAGRAM

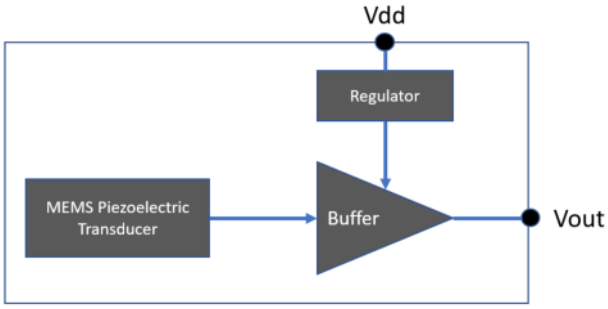

TYPICAL APPLICATION CIRCUIT

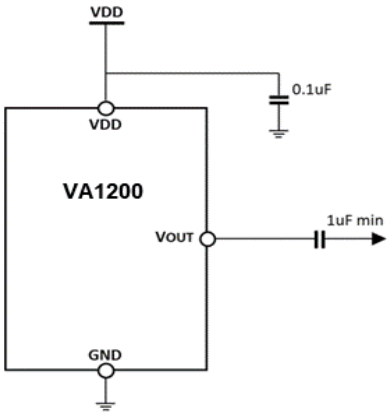

Vesper reserves the right to alter the datasheet specifications without notification. Vesper assumes no liability for the use of engineering samples and offers no warranty for this product.

info@vespermems.com

TABLE OF CONTENTS

GENERAL DESCRIPTION 1
FEATURES 1
APPLICATIONS 1
ORDERING INFORMATION 1
BLOCK DIAGRAM 1
TYPICAL APPLICATION CIRCUIT 1
ANALOG OUTPUT SPECIFICATIONS 3
ELECTRICAL SPECIFICATIONS 3
ABSOLUTE MAXIMUM RATINGS 3
RELIABILITY SPECIFICATIONS 5
SOLDER REFLOW PROFILE 5
SENSITIVE AXIS 5
DIMENSIONS AND PIN LAYOUT 6
PCB DESIGN AND LAND PATTERN LAYOUT 7
LID MARKING 7
HANDLING INSTRUCTIONS 8
TAPE AND REEL SPECIFICATIONS 8
REVISION HISTORY 9

Vesper reserves the right to alter the datasheet specifications without notification. Vesper assumes no liability for the use of engineering samples and offers no warranty for this product.

ANALOG OUTPUT SPECIFICATIONS

All specifications are at 25°C, VDD = 1.8 V unless otherwise noted

Parameter	Symbol	Conditions	Min.	Typ.	Max.	Units
Sensitivity	Sens	re 1V per g @ 250Hz, Single-ended	-46	-45	-44	dBV/g
Resonant Peak	Fr	Frequency		2.8		kHz
Acceleration Noise	An	BW = 100Hz to 2.4kHz, A-weighted		1.5		mg rms
Total Harmonic Distortion	THD	1g, 250Hz		0.1		%
Max Input Level		THD < 10%		20		g
Startup Time		Within ±0.5dB of actual sensitivity		200		µS
Sensitive Axis			Z axis			
Polarity		Acceleration in +Z direction	Increase in output voltage			
Acoustic Rejection		94dB SPL @ 250Hz, Inverse of acoustic sensitivity		85		dBV/Pa

ELECTRICAL SPECIFICATIONS

All specifications are at 25°C, VDD = 1.8 V unless otherwise noted

Parameter	Symbol	Conditions	Min.	Typ.	Max.	Units
Supply Voltage	VDD		1.6	1.8	3.6	V
Supply Current	IDD	VDD ≤ 1.8 V, Mode = Normal		160		µA
Power Supply Rejection Ratio	PSRR	VDD = 1.8, 1kHz, 100mV$_{PP}$ Sine wave		59		dB
Power Supply Rejection	PSR	VDD = 1.8, 217Hz, 100mV$_{PP}$ square wave, 100 Hz – 2.4kHz, A-weighted		-91		dB(A)
Output Impedance	ZOUT			400		Ω
Output DC Offset				0.8		V

ABSOLUTE MAXIMUM RATINGS

Parameter	Rating	Units
Supply Voltage	-0.3 to +3.6	V
Operating Temperature Range	-40 to +85	°C
Storage Temperature Range	-55 to +150	°C
Mechanical Shock	10,000g per MIL-STD-883 M2002	

Vesper reserves the right to alter the datasheet specifications without notification. Vesper assumes no liability for the use of engineering samples and offers no warranty for this product.

TYPICAL PERFORMANCE PLOTS

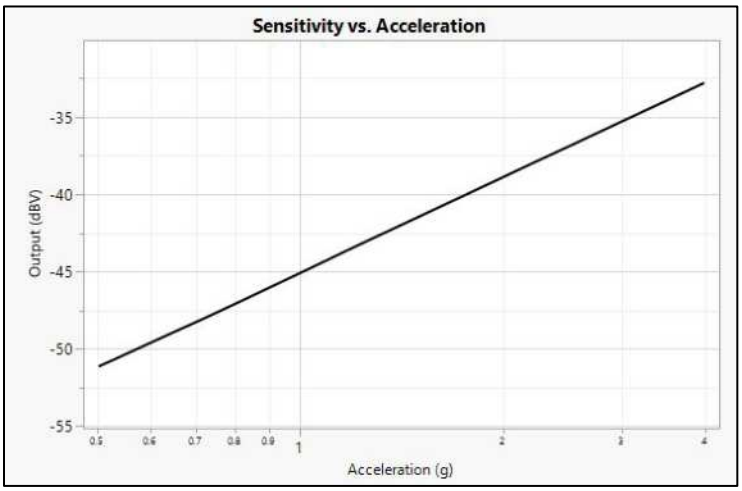

Output vs Acceleration, 250Hz

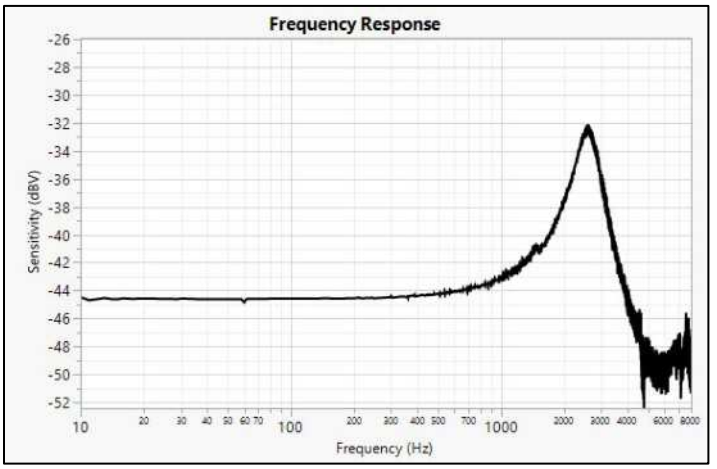

Frequency Response

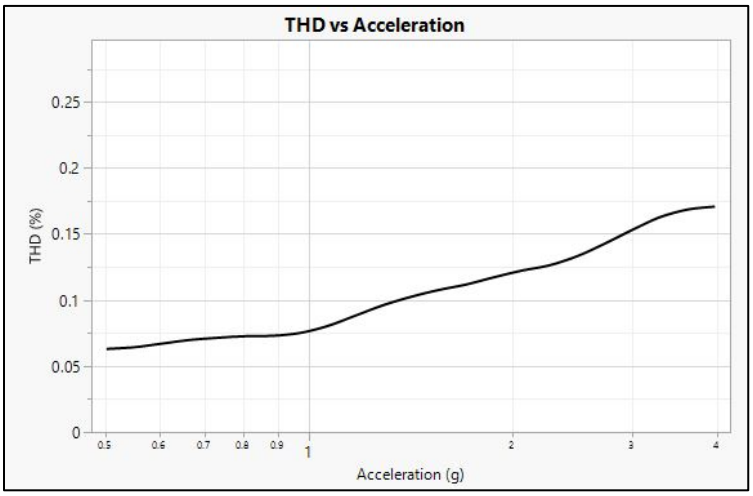

THD vs Acceleration, 250Hz

Vesper reserves the right to alter the datasheet specifications without notification. Vesper assumes no liability for the use of engineering samples and offers no warranty for this product.

RELIABILITY SPECIFICATIONS

Stress Test	Description
Temperature Cycling Test	-40°C to +125°C, 850 cycles
High Temperature Operating Life	+125°C, 1000 hours, biased
High Temperature Storage	+125°C, 1000 hours, unbiased
Temperature Humidity Bias	+85°C, 85% RH, 1000 hours, biased
Reflow	3 reflow cycles with peak temperature of +260°C
ESD-HBM	3 discharge, all pins, ± 2kV
ESD-CDM	3 discharges, all pins, ± 750V

SOLDER REFLOW PROFILE

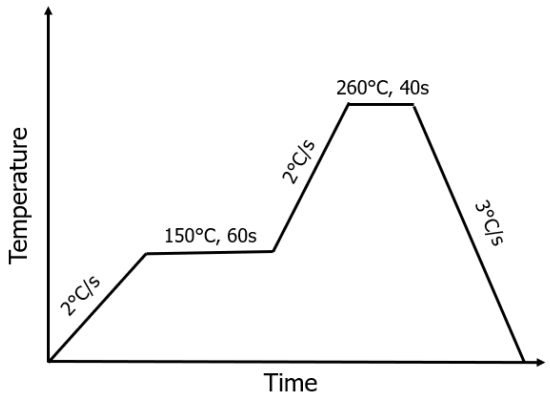

Solder Reflow Profile

SENSITIVE AXIS

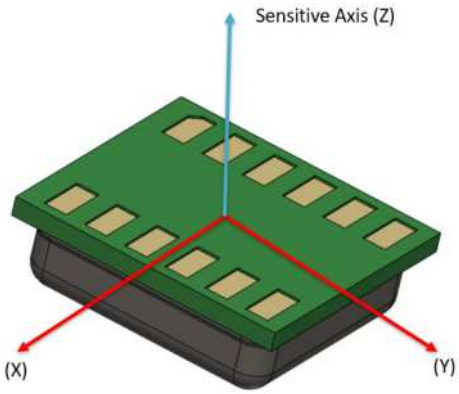

Note: Sensitive Axis (Z), Direction Shown (Z-)

Vesper reserves the right to alter the datasheet specifications without notification. Vesper assumes no liability for the use of engineering samples and offers no warranty for this product.

DIMENSIONS AND PIN LAYOUT

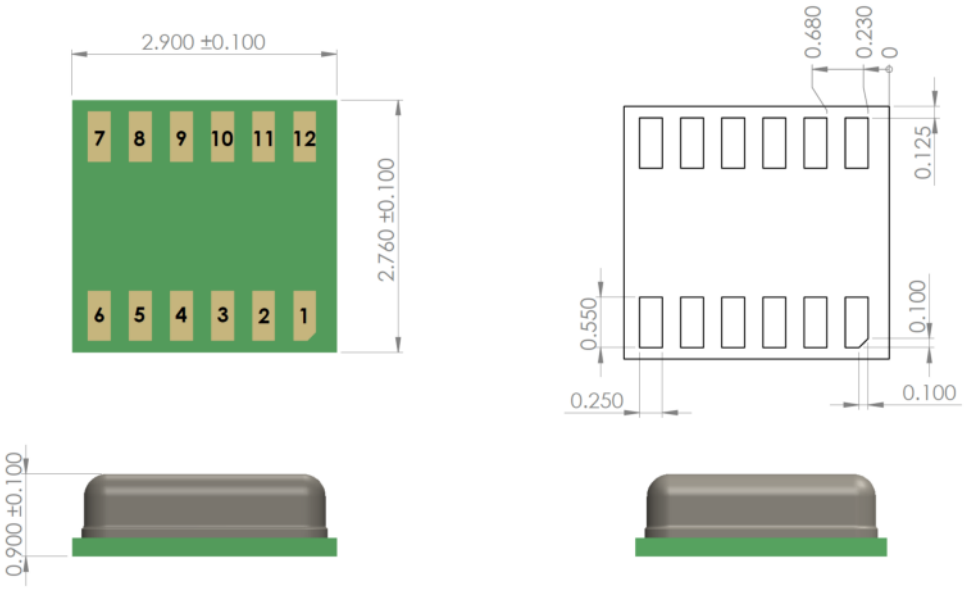

Pin Number	Pin Name	Functionality in VA1200 (Designation in future product with ZPL)
1	Vout	Analog Output
2	Gnd	Ground (Reserved for I2C SDA in future product)
3	Gnd	Ground (Reserved for I2C SCL in future product)
4	Gnd	Ground
5	Gnd	Ground
6	Gnd	Ground
7	Gnd	Ground
8	Gnd	Ground
9	Gnd	Ground
10	Gnd	Ground (Reserved for MODE in future product)
11	Gnd	Ground (Reserved for DOUT in future product)
12	Vdd	Power

Vesper reserves the right to alter the datasheet specifications without notification. Vesper assumes no liability for the use of engineering samples and offers no warranty for this product.

PCB DESIGN AND LAND PATTERN LAYOUT

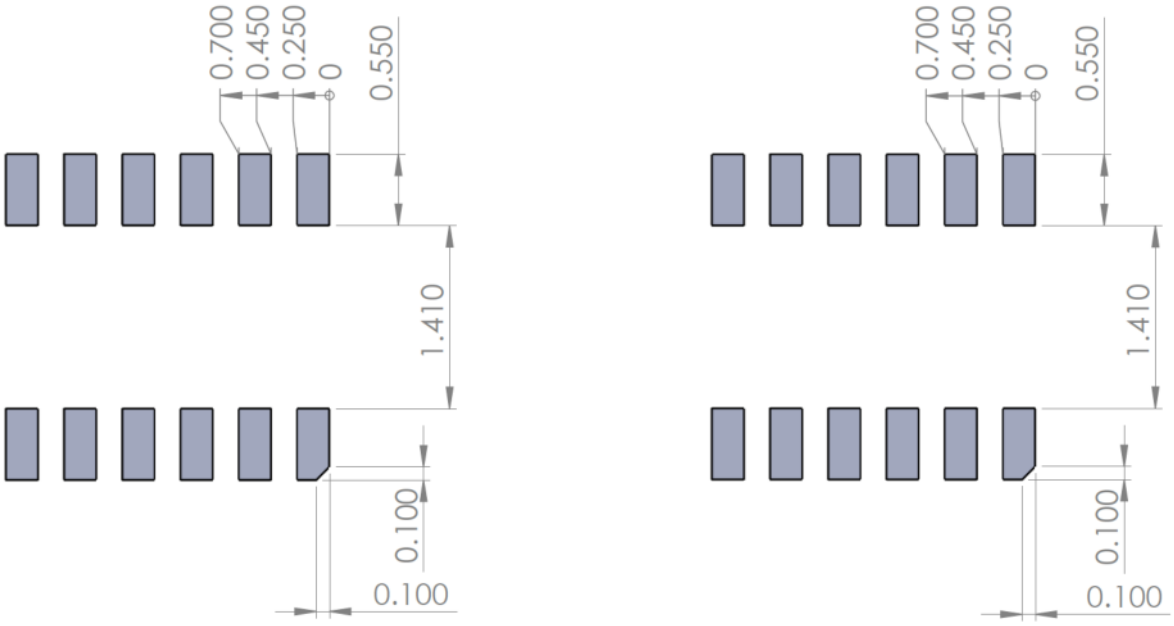

PCB and Solder Stencil Pattern – All dimensions are in mm

LID MARKING

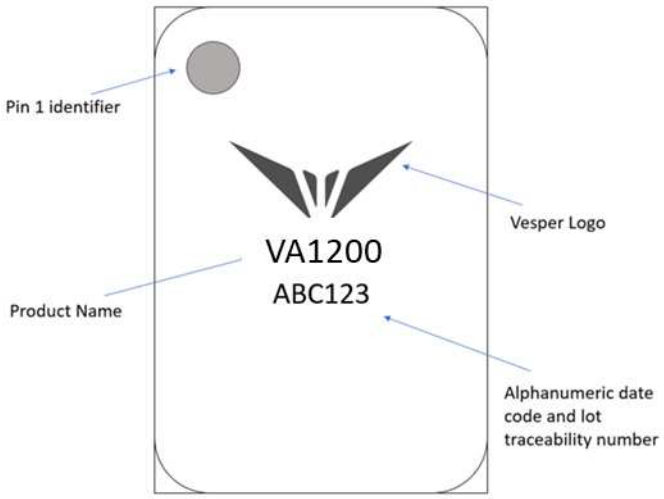

Lid Marking Description

Note: Parts marked "VE" in the product name are Engineering samples. Final samples will be marked "VA"

Vesper reserves the right to alter the datasheet specifications without notification. Vesper assumes no liability for the use of engineering samples and offers no warranty for this product.

HANDLING INSTRUCTIONS

Vesper's piezoelectric MEMS devices are very resistant to harsh environments such as dust and moisture. However, to avoid mechanical damage to the MEMS structure, we recommend using appropriate handling procedures when manually handling the parts or when using pick and place equipment. The following guidelines will avoid damage:

- Do not board wash or clean after the reflow process.
- Use a placement force of <1,000g when using a pick and place machine.
- Recommended device pick location is given below

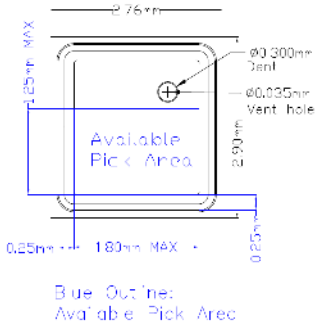

Recommended device pick location

TAPE AND REEL SPECIFICATIONS

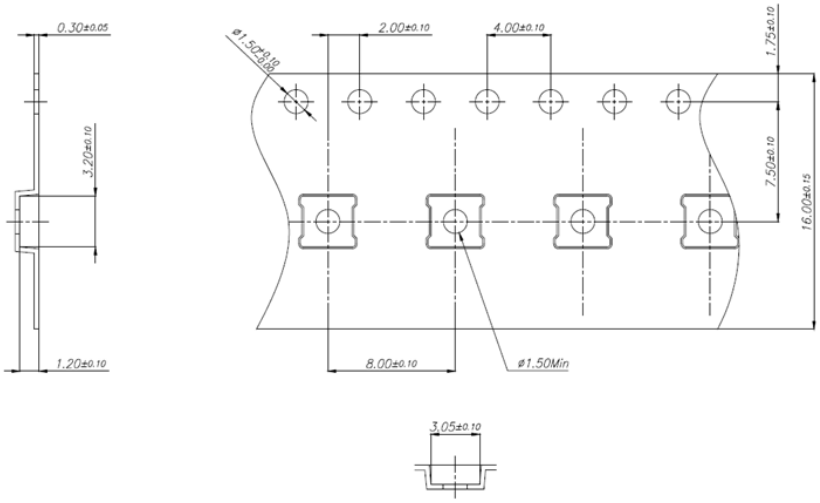

Tape & Reel specification

Vesper reserves the right to alter the datasheet specifications without notification. Vesper assumes no liability for the use of engineering samples and offers no warranty for this product.

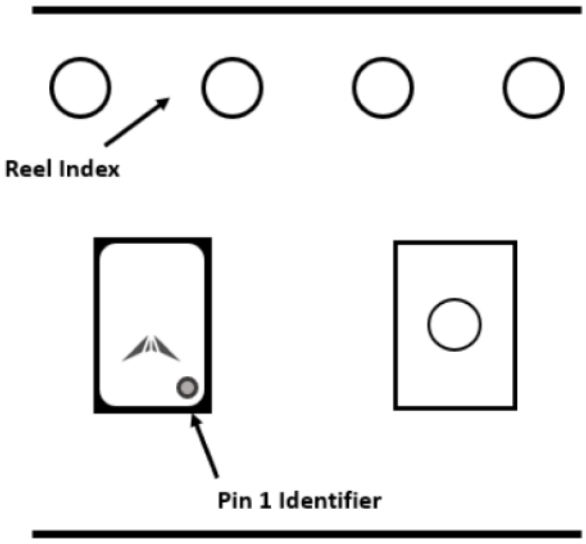

Part Orientation in Reel (dimension not to scale)

REVISION HISTORY

Revision	Date	Description
0.0.0	08/08/2019	Initial Revision
0.0.1	08/14/2019	Updated package pinout
0.0.2	09/24/2019	Updated package pinout
0.0.3	03/05/2020	Updated NC Pins (2-11) to GND
0.0.4	03/16/2020	Added Lid Marking, PCB land and Stencil pattern, Tape & Reel specification and lid marking to identify Pin 1 orientation
0.0.5	4/6/2020	Revised Sensitivity, Resonant Peak Renamed "Overload level" to "Max Input Level"
0.0.6	07/06/2020	Updated performance parameters New Pad Assignments for future use in VA1210

Vesper reserves the right to alter the datasheet specifications without notification. Vesper assumes no liability for the use of engineering samples and offers no warranty for this product.