nuvoTon

8-BIT MICROCONTROLLER

Table of Contents-

1 GENERAL DESCRIPTION 4
2 FEATURES 5
3 PARTS INFORMATION LIST 6
3.1 Lead Free (RoHS) Parts information list 6
4 PIN CONFIGURATIONS 7
5 PIN DESCRIPTIONS 9
6 BLOCK DIAGRAM 11
7 FUNCTIONAL DESCRIPTION 12
7.1 On-Chip Flash EPROM 12
7.2 I/O Ports 12
7.3 Serial I/O 12
7.4 Timers 12
7.5 Interrupts 12
7.6 Data Pointers 13
7.7 Architecture 13
7.7.1 ALU 13
7.7.2 Accumulator 13
7.7.3 B Register 13
7.7.4 Program Status Word 13
7.7.5 Scratch-pad RAM 13
7.7.6 Stack Pointer 13
8 MEMORY ORGANIZATION 14
8.1 Program Memory (on-chip Flash) 14
8.2 Scratch-pad RAM and Register Map 14
8.2.1 Working Registers 16
8.2.2 Bit addressable Locations 17
8.2.3 Stack 17
9 SPECIAL FUNCTION REGISTERS 18
9.1 SFR Detail Bit Descriptions 20
10 INSTRUCTION 35
11 INSTRUCTION TIMING 43
12 POWER MANAGEMENT 44
12.1 Idle Mode 44
12.2 Power Down Mode 44
13 RESET CONDITIONS 45
13.1 Sources of reset 45
13.1.1 External Reset 45
13.1.2 Software Reset 45

13.1.3 Watchdog Timer Reset 45
13.1.4 RESET STATE 45
13.2 Interrupts 46
13.3 Interrupt Sources 46
13.4 Priority Level Structure 46
13.5 Interrupt Response Time 48
13.6 Interrupt Inputs 49
14 PROGRAMMABLE TIMERS/COUNTERS 50
14.1 Timer/Counters 0 & 1 50
14.2 Time-Base Selection 50
14.2.1 Mode 0 50
14.2.2 Mode 1 50
14.2.3 Mode 2 51
14.2.4 Mode 3 51
14.3 Timer/Counter 2 52
14.3.1 Capture Mode 52
14.3.2 Auto-Reload Mode, Counting up 53
14.3.3 Auto-reload Mode, Counting Up/Down 53
14.3.4 Baud Rate Generator Mode 54
15 WATCHDOG TIMER 55
16 SERIAL PORT 57
16.1 MODE 0 57
16.2 MODE 1 58
16.3 MODE 2 59
17 FLASH ROM CODE BOOT MODE SELECTION 62
18 ISP(IN-SYSTEM PROGRAMMING) 63
19 CONFIG BITS 67
20 TYPICAL APPLICATION CIRCUITS 69
21 ELECTRICAL CHARACTERISTICS 70
21.1 Absolute Maximum Ratings 70
21.2 DC ELECTRICAL CHARACTERISTICS 71
21.3 AC ELECTRICAL CHARACTERISTICS 72
21.3.1 Clock Input Waveform 72
21.3.2 Program Fetch Cycle 73
21.3.3 Data Read Cycle 73
21.3.4 Data Write Cycle 74
21.3.5 Port Access Cycle 74
21.3.6 Program Operation 74
21.4 TIMING waveforms 75
21.4.1 Program Fetch Cycle 75
21.4.2 Data Read Cycle 75
21.4.3 Data Write Cycle 76
21.4.4 Port Access Cycle 76
21.4.5 Reset Pin Access Cycle 77

22 PACKAGE DIMENSIONS 78
22.1 40-pin DIP 78
22.2 44-pin PLCC 79
22.3 44-pin PQFP 80
22.4 48-pin LQFP 81
23 REVISION HISTORY 88

1 GENERAL DESCRIPTION

The W78I054D/W78I052D/W78I051D series is an 8-bit microcontroller which can accommodate a wider frequency range with low power consumption. The instruction set for the W78I054D/ W78I052D/ W78I051D series is fully compatible with the standard 8052.

The W78I054D/W78I052D/W78I051D series contains 16K/8K/4K bytes Flash EPROM programmable by hardware writer; a 256 bytes RAM; four 8-bit bi-directional (P0, P1, P2, P3) and bit-addressable I/O ports; an additional 4-bit I/O port P4; three 16-bit timer/counters; a hardware watchdog timer and a serial port. These peripherals are supported by 8 sources 4-level interrupt capability. To facilitate programming and verification, the Flash EPROM inside the W78I054D/W78I052D/W78I051D series allows the program memory to be programmed and read electronically. Once the code is confirmed, the user can protect the code for security.

The W78I054D/W78I052D/W78I051D series microcontroller has two power reduction modes, idle mode and power-down mode, both of which are software selectable. The idle mode turns off the processor clock but allows for continued peripheral operation. The power-down mode stops the crystal oscillator for minimum power consumption. The external clock can be stopped at any time and in any state without affecting the processor. The W78I054D/W78I052D/W78I051D series contains In-System Programmable (ISP) 2KB LD Flash EPROM for loader program, operating voltage from 3.3V to 5.5V.

The W78I054D/W78I052D/W78I051D series feature industrial temperature rage (-40 degrees Celsius to +85 degrees Celsius).

2 FEATURES

- Fully static design 8-bit CMOS microcontroller
- Optional 12T or 6T mode
  - 12T Mode, 12 clocks per machine cycle operation (default), Speed up to 40 MHz/5V
  - 6T Mode, 6 clocks per machine cycle operation set by the writer, Speed up to 20 MHz/5V
- Wide supply voltage of 2.4V to 5.5V
- Temperature grade is (-40°C~85°C)
- Pin and Instruction-sets compatible with MCS-51
- 256 bytes of on-chip scratchpad RAM
- 16K/8K/4K bytes electrically erasable/programmable Flash EPROM
- 2K bytes LDROM support ISP function (Reference Application Note)
- 64KB program memory address space
- 64KB data memory address space
- Four 8-bit bi-directional ports
- 8-sources, 4-level interrupt capability
- One extra 4-bit bit-addressable I/O port, additional $\overline{INT2}$ / $\overline{INT3}$ (available on PQFP, PLCC and LQFP package)
- Three 16-bit timer/counters
- One full duplex serial port
- Watchdog Timer
- EMI reduction mode
- Software Reset
- Built-in power management with idle mode and power down mode
- Code protection
- Packages:
  - Lead Free (RoHS) DIP 40: W78I054DDG
  - Lead Free (RoHS) PLCC 44: W78I054DPG
  - Lead Free (RoHS) PQFP 44: W78I054DFG
  - Lead Free (RoHS) LQFP 48: W78I054DLG
  - Lead Free (RoHS) DIP 40: W78I052DDG
  - Lead Free (RoHS) PLCC 44: W78I052DPG
  - Lead Free (RoHS) PQFP 44: W78I052DFG
  - Lead Free (RoHS) LQFP 48: W78I052DLG
  - Lead Free (RoHS) DIP 40: W78I051DDG
  - Lead Free (RoHS) PLCC 44: W78I051DPG
  - Lead Free (RoHS) PQFP 44: W78I051DFG
  - Lead Free (RoHS) LQFP 48: W78I051DLG

3 PARTS INFORMATION LIST

3.1 Lead Free (RoHS) Parts information list

Table 3-1: Lead Free (RoHS) Parts information list

PART NO.	RAM	LD FLASH SIZE	AP FLASH SIZE	PACKAGE	Temperature grade
W78I054DDG	256 Bytes	2K Bytes	14K Bytes	DIP-40 Pin	-40°C~85°C
		0	16K Bytes		
W78I054DPG		2K Bytes	14K Bytes	PLCC-44 Pin	-40°C~85°C
		0	16K Bytes		
W78I054DFG		2K Bytes	14K Bytes	PQFP-44 Pin	-40°C~85°C
		0	16K Bytes		
W78I054DLG		2K Bytes	14K Bytes	LQFP-48 Pin	-40°C~85°C
		0	16K Bytes		
W78I052DDG		2K Bytes	8K Bytes	DIP-40 Pin	-40°C~85°C
W78I052DPG				PLCC-44 Pin	-40°C~85°C
W78I052DFG				PQFP-44 Pin	-40°C~85°C
W78I052DLG				LQFP-48 Pin	-40°C~85°C
W78I051DDG		2K Bytes	4K Bytes	DIP-40 Pin	-40°C~85°C
W78I051DPG				PLCC-44 Pin	-40°C~85°C
W78I051DFG				PQFP-44 Pin	-40°C~85°C
W78I051DLG				LQFP-48 Pin	-40°C~85°C

4 PIN CONFIGURATIONS

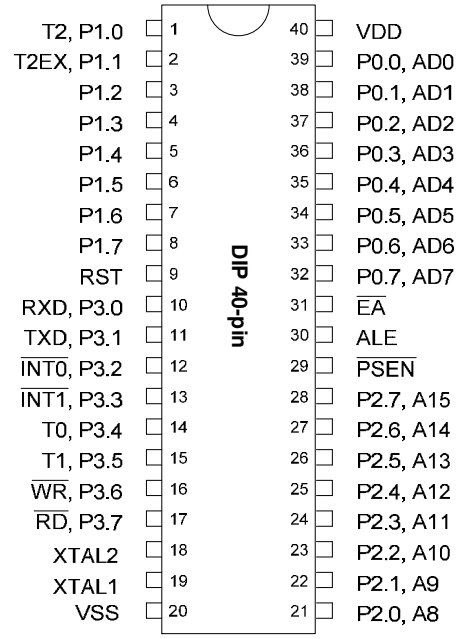

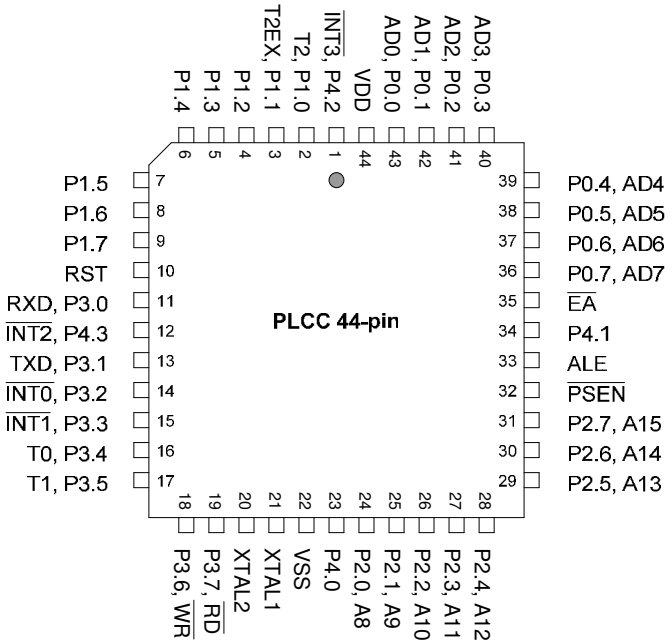

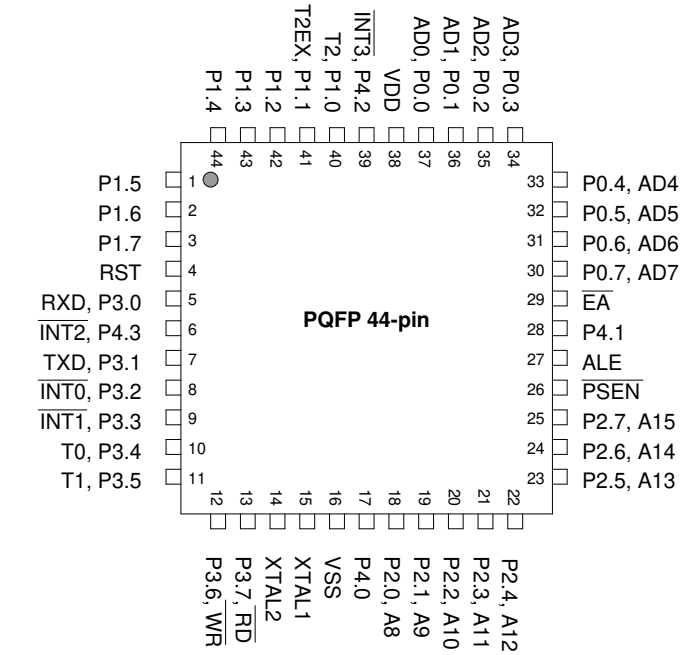
PQFP 44-pin
1 P1.5
2 P1.6
3 P1.7
4 RST
5 RXD, P3.0
6 INT2, P4.3
7 TXD, P3.1
8 INT0, P3.2
9 INT1, P3.3
10 T0, P3.4
11 T1, P3.5
12 P3.6, WR
13 P3.7, RD
14 XTAL2
15 XTAL1
16 VSS
17 P4.0
18 P2.0, A8
19 P2.1, A9
20 P2.2, A10
21 P2.3, A11
22 P2.4, A12
23 P2.5, A13
24 P2.6, A14
25 P2.7, A15
26 PSEN
27 ALE
28 P4.1
29 EA
30 P0.7, AD7
31 P0.6, AD6
32 P0.5, AD5
33 P0.4, AD4
34 AD3, P0.3
35 AD2, P0.2
36 AD1, P0.1
37 AD0, P0.0
38 VDD
39 INT3, P4.2
40 T2, P1.0
41 T2EX, P1.1
42 P1.2
43 P1.3
44 P1.4

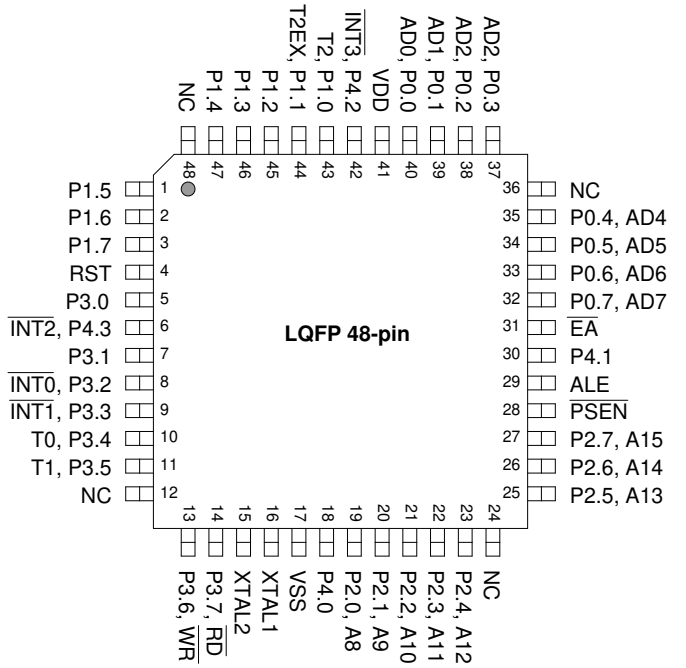
LQFP 48-pin
1 P1.5
2 P1.6
3 P1.7
4 RST
5 P3.0
6 INT2, P4.3
7 P3.1
8 INT0, P3.2
9 INT1, P3.3
10 T0, P3.4
11 T1, P3.5
12 NC
13 P3.6, WR
14 P3.7, RD
15 XTAL2
16 XTAL1
17 VSS
18 P4.0
19 P2.0, A8
20 P2.1, A9
21 P2.2, A10
22 P2.3, A11
23 P2.4, A12
24 NC
25 P2.5, A13
26 P2.6, A14
27 P2.7, A15
28 PSEN
29 ALE
30 P4.1
31 EA
32 P0.7, AD7
33 P0.6, AD6
34 P0.5, AD5
35 P0.4, AD4
36 NC
37 AD2, P0.3
38 AD2, P0.2
39 AD1, P0.1
40 AD0, P0.0
41 VDD
42 INT3, P4.2
43 T2, P1.0
44 T2EX, P1.1
45 P1.2
46 P1.3
47 P1.4
48 NC

5 PIN DESCRIPTIONS

SYMBOL	TYPE	DESCRIPTIONS
$\overline{EA}$	I	EXTERNAL ACCESS ENABLE: This pin forces the processor to execute out of external ROM. It should be kept high to access internal ROM. The ROM address and data will not be present on the bus if $\overline{EA}$ pin is high and the program counter is within internal ROM area. Otherwise they will be present on the bus.
$\overline{PSEN}$	O H	PROGRAM STORE ENABLE: $\overline{PSEN}$ enables the external ROM data onto the Port 0 address/data bus during fetch and MOVC operations. When internal ROM access is performed, no $\overline{PSEN}$ strobe signal outputs from this pin.
ALE	O H	ADDRESS LATCH ENABLE: ALE is used to enable the address latch that separates the address from the data on Port 0.
RST	I L	RESET: A high on this pin for two machine cycles while the oscillator is running resets the device.
XTAL1	I	CRYSTAL1: This is the crystal oscillator input. This pin may be driven by an external clock.
XTAL2	O	CRYSTAL2: This is the crystal oscillator output. It is the inversion of XTAL1.
VSS	I	GROUND: Ground potential
VDD	I	POWER SUPPLY: Supply voltage for operation.
P0.0–P0.7	I/O H	PORT 0: Port 0 is an open-drain bi-directional I/O port. This port also provides a multiplexed low order address/data bus during accesses to external memory.
P1.0–P1.7	I/O H	PORT 1: Port 1 is a bi-directional I/O port with internal pull-ups. The bits have alternate functions which are described below: T2 (P1.0): Timer/Counter 2 external count input T2EX (P1.1): Timer/Counter 2 Reload/Capture control
P2.0–P2.7	I/O H	PORT 2: Port 2 is a bi-directional I/O port with internal pull-ups. This port also provides the upper address bits for accesses to external memory.

Pin Description, continued

SYMBOL	TYPE	DESCRIPTIONS
P3.0–P3.7	I/O H	PORT 3: Port 3 is a bi-directional I/O port with internal pull-ups. All bits have alternate functions, which are described below: RXD (P3.0): Serial Port 0 input TXD (P3.1): Serial Port 0 output $\overline{INT0}$ (P3.2) : External Interrupt 0 $\overline{INT1}$ (P3.3) : External Interrupt 1 T0 (P3.4) : Timer 0 External Input T1 (P3.5) : Timer 1 External Input $\overline{WR}$ (P3.6) : External Data Memory Write Strobe $\overline{RD}$ (P3.7) : External Data Memory Read Strobe
P4.0–P4.3	I/O H	PORT 4: Another bit-addressable bidirectional I/O port P4. P4.3 and P4.2 are alternative function pins. It can be used as general I/O port or external interrupt input sources ($\overline{INT2}$ / $\overline{INT3}$).

* Note: TYPE I: input, O: output, I/O: bi-directional, H: pull-high, L: pull-low, D: open drain.

In application if MCU pins need external pull-up, it is recommended to add a pull-up resistor (10KΩ) between pin and power (V_{DD}) instead of directly wiring pin to V_{DD} for enhancing EMC.

6 BLOCK DIAGRAM

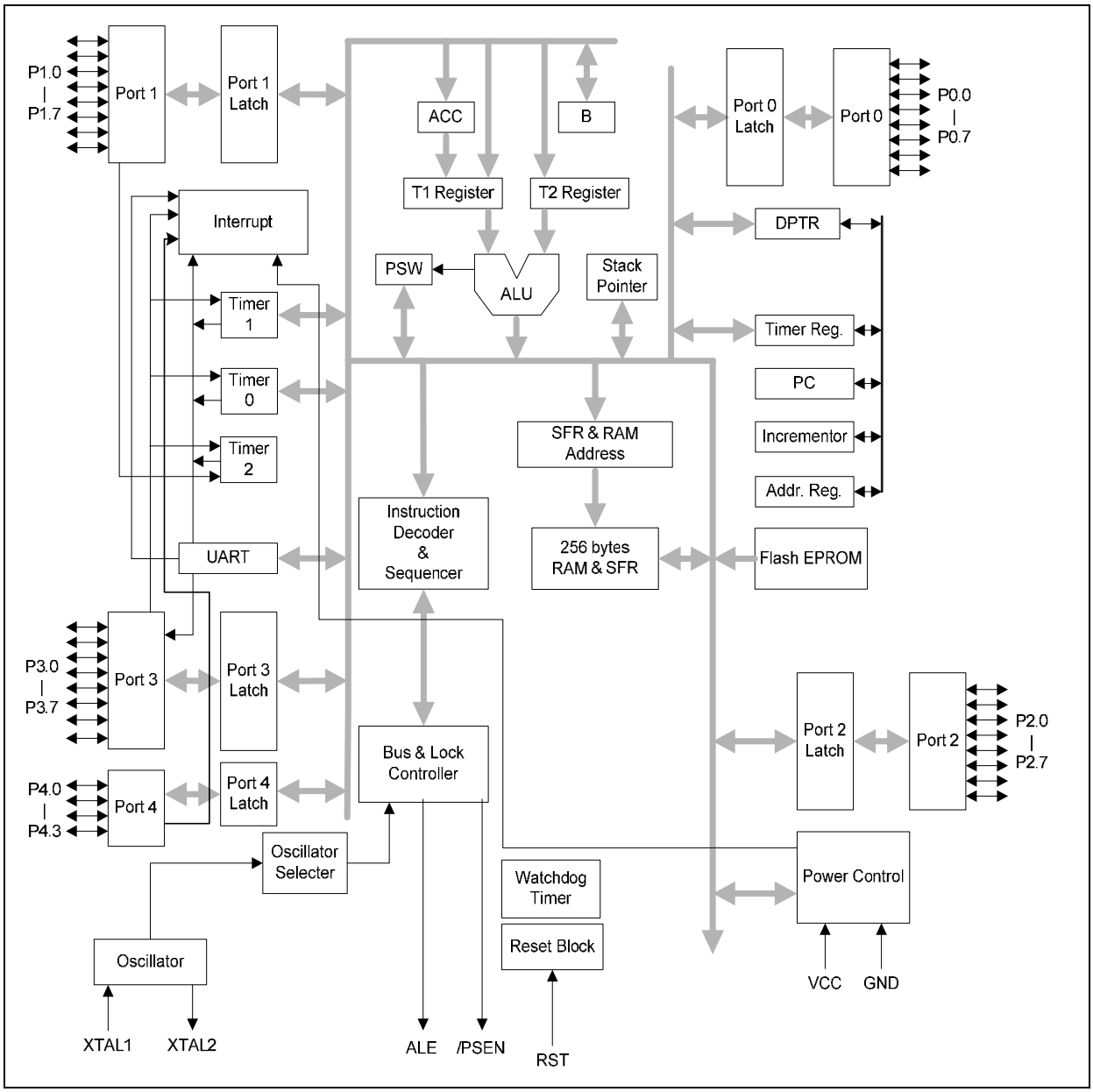

Figure 6- 1 W78I054D/W78I052D/W78I051D Block Diagram

7 FUNCTIONAL DESCRIPTION

The W78I054D/W78I052D/W78I051D series architecture consists of a core controller surrounded by various registers, five general purpose I/O ports, 16K/8K/4K flash EPROM, 2K FLASH EPROM for ISP function, 256 bytes of RAM, three timer/counters, and a serial port. The processor supports 111 different op-codes and references both a 64K program address space and a 64K data storage space.

7.1 On-Chip Flash EPROM

The W78I054D/W78I052D/W78I051D series include one 16K/8K/4K bytes of main Flash EPROM for application program.

7.2 I/O Ports

The W78I054D/W78I052D/W78I051D series has four 8-bit ports and one extra 4-bit port. Port 0 can be used as an Address/Data bus when external program is running or external memory/device is accessed by MOVC or MOVX instruction. In these cases, it has strong pull-ups and pull-downs, and does not need any external pull-ups. Otherwise it can be used as a general I/O port with open-drain circuit. Port 2 is used chiefly as the upper 8-bits of the Address bus when port 0 is used as an address/data bus. It also has strong pull-ups and pull-downs when it serves as an address bus. Port1 and 3 act as I/O ports with alternate functions. Port 4 is only available on PLCC/PQFP/LQFP package type. It serves as a general purpose I/O port as Port 1 and Port 3. Another bit-addressable bidirectional I/O port P4. P4.3 and P4.2 are alternative function pins. It can be used as general I/O port or external interrupt input sources ($\overline{INT2}$ / $\overline{INT3}$).

7.3 Serial I/O

The W78I054D/W78I052D/W78I051D series have one serial port that is functionally similar to the serial port of the original 8032 family. However the serial port on the W78I054D/ W78I052D/ W78I051D series can operate in different modes in order to obtain timing similarity as well.

7.4 Timers

Timers 0, 1, and 2 each consist of two 8-bit data registers. These are called TL0 and TH0 for Timer 0, TL1 and TH1 for Timer 1, and TL2 and TH2 for Timer 2. The TCON and TMOD registers provide control functions for timers 0 and 1. The T2CON register provides control functions for Timer 2. RCAP2H and RCAP2L are used as reload/capture registers for Timer 2.

The operations of Timer 0 and Timer 1 are the same as in the 8051 CPU. Timer 2 is a special feature of the W78I054D/W78I052D/W78I051D: it is a 16-bit timer/counter that is configured and controlled by the T2CON register. Like Timers 0 and 1, Timer 2 can operate as either an external event counter or as an internal timer, depending on the setting of bit C/T2 in T2CON. Timer 2 has three operating modes: capture, auto-reload, and baud rate generator. The clock speed at capture or auto-reload mode is the same as that of Timers 0 and 1.

7.5 Interrupts

The Interrupt structure in the W78I054D/W78I052D/W78I051D is slightly different from that of the standard 8052. Due to the presence of additional features and peripherals, the number of interrupt sources and vectors has been increased. The W78I054D/W78I052D/W78I051D provides 8 interrupt resources with four priority level, including four external interrupt sources, three timer interrupts, serial I/O interrupts.

7.6 Data Pointers

The data pointer of W78I054D/W78I052D/W78I051D series is same as standard 8052 that have one 16-bit Data Pointer (DPTR).

7.7 Architecture

The W78I054D/W78I052D/W78I051D series are based on the standard 8052 device. It is built around an 8-bit ALU that uses internal registers for temporary storage and control of the peripheral devices. It can execute the standard 8052 instruction set.

7.7.1 ALU

The ALU is the heart of the W78I054D/W78I052D/W78I051D series. It is responsible for the arithmetic and logical functions. It is also used in decision making, in case of jump instructions, and is also used in calculating jump addresses. The user cannot directly use the ALU, but the Instruction Decoder reads the op-code, decodes it, and sequences the data through the ALU and its associated registers to generate the required result. The ALU mainly uses the ACC which is a special function register (SFR) on the chip. Another SFR, namely B register is also used Multiply and Divide instructions. The ALU generates several status signals which are stored in the Program Status Word register (PSW).

7.7.2 Accumulator

The Accumulator (ACC) is the primary register used in arithmetic, logical and data transfer operations in the W78I054D/W78I052D/W78I051D series. Since the Accumulator is directly accessible by the CPU, most of the high speed instructions make use of the ACC as one argument.

7.7.3 B Register

This is an 8-bit register that is used as the second argument in the MUL and DIV instructions. For all other instructions it can be used simply as a general purpose register.

7.7.4 Program Status Word

This is an 8-bit SFR that is used to store the status bits of the ALU. It holds the Carry flag, the Auxiliary Carry flag, General purpose flags, the Register Bank Select, the Overflow flag, and the Parity flag.

7.7.5 Scratch-pad RAM

The W78I054D/W78I052D/W78I051D series has a 256 byte on-chip scratch-pad RAM. This can be used by the user for temporary storage during program execution. A certain section of this RAM is bit addressable, and can be directly addressed for this purpose.

7.7.6 Stack Pointer

The W78I054D/W78I052D/W78I051D series has an 8-bit Stack Pointer which points to the top of the Stack. This stack resides in the Scratch Pad RAM in the W78I054D/W78I052D/W78I051D. Hence the size of the stack is limited by the size of this RAM.

8 MEMORY ORGANIZATION

The W78I054D/W78I052D/W78I051D series separate the memory into two separate sections, the Program Memory and the Data Memory. The Program Memory is used to store the instruction op-codes, while the Data Memory is used to store data or for memory mapped devices.

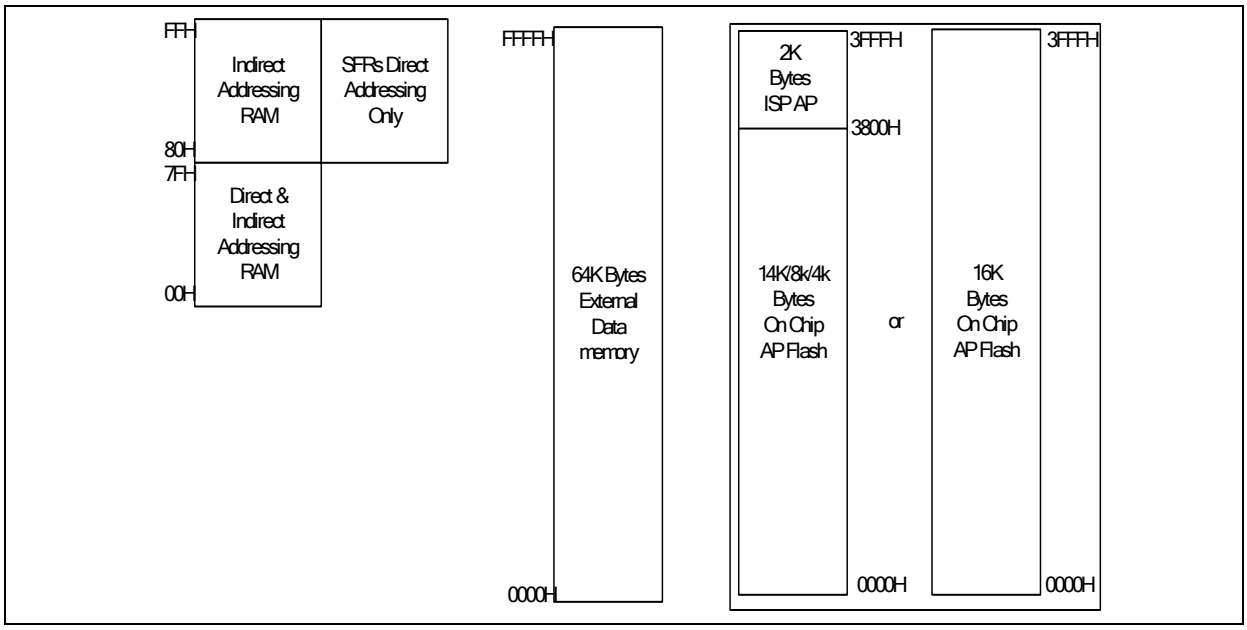

Figure 8- 1 Memory Map

8.1 Program Memory (on-chip Flash)

The Program Memory on the W78I054D/W78I052D/W78I051D series can be up to 16K/8K/4K bytes (2K bytes for ISP F/W, share with the W78E054D) long. All instructions are fetched for execution from this memory area. The MOVC instruction can also access this memory region.

8.2 Scratch-pad RAM and Register Map

As mentioned before the W78I054D/W78I052D/W78I051D series have separate Program and Data Memory areas. There are also several Special Function Registers (SFRs) which can be accessed by software. The SFRs can be accessed only by direct addressing, while the on-chip RAM can be accessed by either direct or indirect addressing.

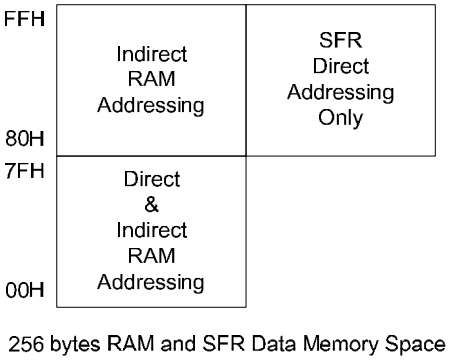

Figure 8- 2 W78I054D/W78I052D/W78I051D RAM and SFR Memory Map

Since the scratch-pad RAM is only 256bytes it can be used only when data contents are small. There are several other special purpose areas within the scratch-pad RAM. These are illustrated in next figure.

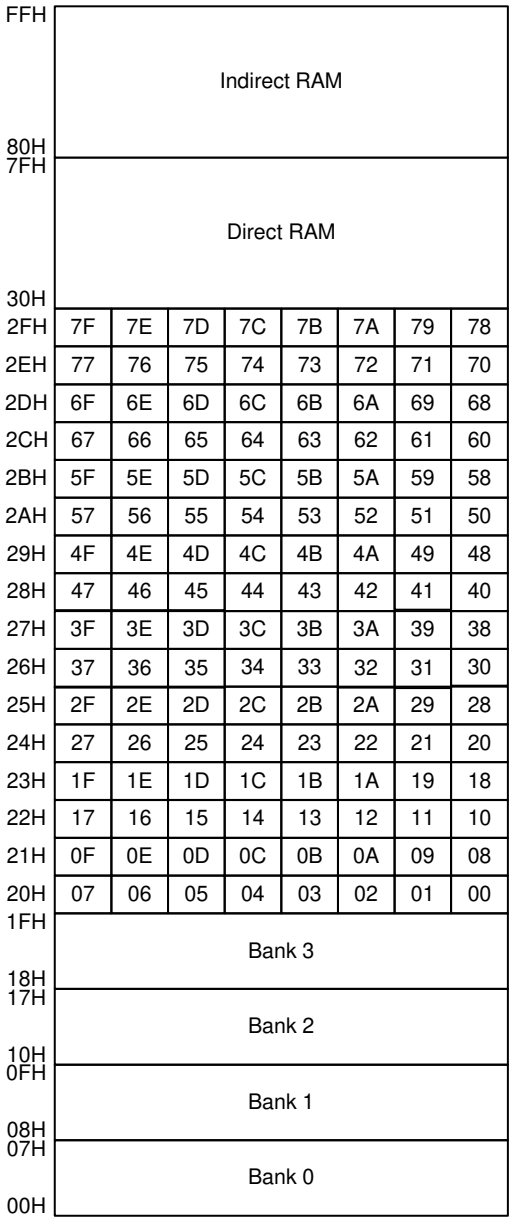

Figure 8- 3 Scratch-pad RAM

8.2.1 Working Registers

There are four sets of working registers, each consisting of eight 8-bit registers. These are termed as Banks 0, 1, 2, and 3. Individual registers within these banks can be directly accessed by separate instructions. These individual registers are named as R0, R1, R2, R3, R4, R5, R6 and R7. However, at one time the W78I054D/W78I052D/W78I051D series can work with only one particular bank. The bank selection is done by setting RS1-RS0 bits in the PSW. The R0 and R1 registers are used to store the address for indirect accessing.

8.2.2 Bit addressable Locations

The Scratch-pad RAM area from location 20h to 2Fh is byte as well as bit addressable. This means that a bit in this area can be individually addressed. In addition some of the SFRs are also bit addressable. The instruction decoder is able to distinguish a bit access from a byte access by the type of the instruction itself. In the SFR area, any existing SFR whose address ends in a 0 or 8 is bit addressable.

8.2.3 Stack

The scratch-pad RAM can be used for the stack. This area is selected by the Stack Pointer (SP), which stores the address of the top of the stack. Whenever a jump, call or interrupt is invoked the return address is placed on the stack. There is no restriction as to where the stack can begin in the RAM. By default however, the Stack Pointer contains 07h at reset. The user can then change this to any value desired. The SP will point to the last used value. Therefore, the SP will be incremented and then address saved onto the stack. Conversely, while popping from the stack the contents will be read first, and then the SP is decreased.

9 SPECIAL FUNCTION REGISTERS

The W78I054D/W78I052D/W78I051D series uses Special Function Registers (SFRs) to control and monitor peripherals and their Modes. The SFRs reside in the register locations 80-FFh and are accessed by direct addressing only. Some of the SFRs are bit addressable. This is very useful in cases where users wish to modify a particular bit without changing the others. The SFRs that are bit addressable are those whose addresses end in 0 or 8. The W78I054D/W78I052D/W78I051D series contain all the SFRs present in the standard 8052. However some additional SFRs are added. In some cases the unused bits in the original 8052, have been given new functions. The list of the SFRs is as follows.

F8									FF
F0	B								F7
E8									EF
E0	ACC								E7
D8	P4								DF
D0	PSW								D7
C8	T2CON	T2MOD	RCAP2L	RCAP2H	TL2	TH2			CF
C0	XICON				SFRAL	SFRAH	SFRRD	SFRCN	C7
B8	IP						EAPAGE	CHPCON	BF
B0	P3							IPH	B7
A8	IE								AF
A0	P2								A7
98	SCON	SBUF							9F
90	P1								97
88	TCON	TMOD	TL0	TL1	TH0	TH1	AUXR	WDTC	8F
80	P0	SP	DPL	DPH			P0UPR	PCON	87

Table 9-1: Special Function Register Location Table

Note:

1. The SFRs in the column with dark borders are bit-addressable

2. The table is condensed with eight locations per row. Empty locations indicate that these are no registers at these addresses. When a bit or register is not implemented, it will read high.

Special Function Registers:

SYMBOL	DEFINITION	ADDRESS	MSB			BIT ADDRESS, SYMBOL				LSB	RESET
B	B register	F0H	(F7)	(F6)	(F5)	(F4)	(F3)	(F2)	(F1)	(F0)	0000 0000B
ACC	Accumulator	E0H	(E7)	(E6)	(E5)	(E4)	(E3)	(E2)	(E1)	(E0)	0000 0000B
P4	Port 4	D8H					INT2	INT3			0000 1111B
PSW	Program status word	D0H	(D7) CY	(D6) AC	(D5) F0	(D4) RS1	(D3) RS0	(D2) OV	(D1) F1	(D0) P	0000 0000B
TH2	T2 reg. high	CDH									0000 0000B
TL2	T2 reg. low	CCH									0000 0000B
RCAP2H	T2 capture low	CBH									0000 0000B
RCAP2L	T2 capture high	CAH									0000 0000B
T2MOD	Timer 2 Mode	C9								DCEN	0000 0000B
T2CON	Timer 2 control	C8H	(CF) TF2	(CE) EXF2	(CD) RCLK	(CC) TCLK	(CB) EXEN2	(CA) TR2	(C9) C/T2	(C8) CP/RL2	0000 0000B
SFRCN	SFR program of control	C7H			NOE	NCE	CTRL3	CTRL2	CTRL1	CTRL0	0000 0000B
SFRRD	SFR program of data register	C6H									0000 0000B
SFRAH	SFR program of address high byte	C5H									0000 0000B
SFRAL	SFR program of address low byte	C4H									0000 0000B
XICON	External interrupt control	C0H	PX3	EX3	IE3	IT3	PX2	EX2	IE2	IT2	0000 0000B
CHPCON	Chip control	BFH	SWRST	-		-	-	-	FBOOTSL	ENP	0000 0000B
EAPAGE	Erase page operation modes	BEH							EAPG1	EAPG0	0000 0000B
IP	Interrupt priority	B8H	(BF) -	(BE) -	(BD) PT2	(BC) PS	(BB) PT1	(BA) PX1	(B9) PT0	(B8) PX0	1100 0000B
IPH	Interrupt priority High	B7H									0000 0000B
P3	Port 3	B0H	(B7) RD	(B6) WR	(B5) T1	(B4) T0	(B3) INT1	(B2) INT0	(B1) TXD	(B0) RXD	1111 1111B
IE	Interrupt enable	A8H	(AF) EA	(AE) -	(AD) ET2	(AC) ES	(AB) ET1	(AA) EX1	(A9) ET0	(A8) EX0	0100 0000B
P2	Port 2	A0H	(A7) A15	(A6) A14	(A5) A13	(A4) A12	(A3) A11	(A2) A10	(A1) A9	(A0) A8	1111 1111B
SBUF	Serial buffer	99H									0000 0000B
SCON	Serial control	98H	(9F) SM0/FE	(9E) SM1	(9D) SM2	(9C) REN	(9B) TB8	(9A) RB8	(99) TI	(98) RI	0000 0000B
P1	Port 1	90H	(97)	(96)	(95)	(94)	(93)	(92)	(91) T2EX	(90) T2	1111 1111B
WDTC	Watchdog control	8FH	ENW	CLRW	WIDL	-	-	PS2	PS1	PS0	0000 0000B
AUXR	Auxiliary	8EH	-	-	-	-				ALEOFF	0000 0110B
TH1	Timer high 1	8DH									0000 0000B
TH0	Timer high 0	8CH									0000 0000B
TL1	Timer low 1	8BH									0000 0000B
TL0	Timer low 0	8AH									0000 0000B
TMOD	Timer mode	89H	GATE	C/T	M1	M0	GATE	C/T	M1	M0	0000 0000B
TCON	Timer control	88H	(8F) TF1	(8E) TR1	(8D) TF0	(8C) TR0	(8B) IE1	(8A) IT1	(89) IE0	(88) IT0	0000 0000B
PCON	Power control	87H	SMOD	SMOD0	-	POR	GF1	GF0	PD	IDL	0011 0000B
P0UPR	Port 0 pull up option Register	86H	-	-	-	-	-	-	-	P0UP	0000 0001B
DPH	Data pointer high	83H									0000 0000B

DPL	Data pointer low	82H									0000 0000B
SP	Stack pointer	81H									0000 0111B
P0	Port 0	80H	(87)	(86)	(85)	(84)	(83)	(82)	(81)	(80)	1111 1111B

9.1 SFR Detail Bit Descriptions

Port 0

Bit:	7	6	5	4	3	2	1	0
	P0.7	P0.6	P0.5	P0.4	P0.3	P0.2	P0.1	P0.0

Mnemonic: P0 Address: 80h

BIT	NAME	FUNCTION
7-0	P0.[7:0]	Port 0 is an open-drain bi-directional I/O port if SFR P0UPR.0 (bit P0UP) clear to “0”, and when SFR P0UPR.0 (bit P0UP) set to “1”, Port 0 pins are internally pulled-up. This port also provides a multiplexed low order address/data bus during accesses to external memory.

STACK POINTER

Bit:	7	6	5	4	3	2	1	0
	SP.7	SP.6	SP.5	SP.4	SP.3	SP.2	SP.1	SP.0

Mnemonic: SP Address: 81h

BIT	NAME	FUNCTION
7-0	SP.[7:0]	The Stack Pointer stores the Scratch-pad RAM address where the stack begins. In other words it always points to the top of the stack.

DATA POINTER LOW

Bit:	7	6	5	4	3	2	1	0
	DPL.7	DPL.6	DPL.5	DPL.4	DPL.3	DPL.2	DPL.1	DPL.0

Mnemonic: DPL Address: 82h

BIT	NAME	FUNCTION
7-0	DPL.[7:0]	This is the low byte of the standard 8052 16-bit data pointer.

DATA POINTER HIGH

Bit:	7	6	5	4	3	2	1	0
	DPH.7	DPH.6	DPH.5	DPH.4	DPH.3	DPH.2	DPH.1	DPH.0

Mnemonic: DPH Address: 83h

BIT	NAME	FUNCTION
7-0	DPH.[7:0]	This is the high byte of the standard 8052 16-bit data pointer.

Port 0 Pull Up Option Register

Bit:	7	6	5	4	3	2	1	0

-	-	-	-	-	-	-	P0UP

Mnemonic: P0UPR Address: 86h

BIT	NAME	FUNCTION
0	P0UP	0: Port 0 pins are open-drain. 1: Port 0 pins are internally pulled-up. Port 0 is structurally the same as Port 2.

Power Control

Bit:	7	6	5	4	3	2	1	0
	SMOD	SMOD0	-	POR	GF1	GF0	PD	IDL

Mnemonic: PCON Address: 87h

BIT	NAME	FUNCTION
7	SMOD	1: This bit doubles the serial port baud rate in mode 1, 2, and 3 when set to 1.
6	SMOD 0	0: Framing Error Detection Disable. SCON.7 (SM0/FE) bit is used as SM0 (standard 8052 function). 1: Framing Error Detection Enable. SCON.7 (SM0/FE) bit is used to reflect as Frame Error (FE) status flag.
5	-	Reserved
4	POR	0: Cleared by software. 1: Set automatically when a power-on reset has occurred.
3	GF1	General purpose user flags.
2	GF0	General purpose user flags.
1	PD	1: The CPU goes into the POWER DOWN mode. In this mode, all the clocks are stopped and program execution is frozen.
0	IDL	1: The CPU goes into the IDLE mode. In this mode, the clocks CPU clock stopped, so program execution is frozen. But the clock to the serial, timer and interrupt blocks is not stopped, and these blocks continue operating.

Timer Control

Bit:	7	6	5	4	3	2	1	0
	TF1	TR1	TF0	TR0	IE1	IT1	IE0	IT0

Mnemonic: TCON Address: 88h

BIT	NAME	FUNCTION
7	TF1	Timer 1 Overflow Flag. This bit is set when Timer 1 overflows. It is cleared automatically when the program does a timer 1 interrupt service routine. Software can also set or clear this bit.
6	TR1	Timer 1 Run Control. This bit is set or cleared by software to turn timer/counter on or off.
5	TF0	Timer 0 Overflow Flag. This bit is set when Timer 0 overflows. It is cleared automatically when the program does a timer 0 interrupt service routine. Software can also set or clear this bit.

4	TR0	Timer 0 Run Control. This bit is set or cleared by software to turn timer/counter on or off.
3	IE1	Interrupt 1 Edge Detect Flag: Set by hardware when an edge/level is detected on $\overline{INT1}$. This bit is cleared by hardware when the service routine is vectored to only if the interrupt was edge triggered. Otherwise it follows the inverse of the pin.
2	IT1	Interrupt 1 Type Control. Set/cleared by software to specify falling edge/ low level triggered external inputs.
1	IE0	Interrupt 0 Edge Detect Flag. Set by hardware when an edge/level is detected on $\overline{INT0}$. This bit is cleared by hardware when the service routine is vectored to only if the interrupt was edge triggered. Otherwise it follows the inverse of the pin.
0	IT0	Interrupt 0 Type Control: Set/cleared by software to specify falling edge/ low level triggered external inputs.

Timer Mode Control

Bit:	7	6	5	4	3	2	1	0
	GATE	C/$\overline{T}$	M1	M0	GATE	C/$\overline{T}$	M1	M0
	TIMER1				TIMER0			

Mnemonic: TMOD Address: 89h

BIT	NAME	FUNCTION
7	GATE	Gating control: When this bit is set, Timer/counter 1 is enabled only while the $\overline{INT1}$ pin is high and the TR1 control bit is set. When cleared, the $\overline{INT1}$ pin has no effect, and Timer 1 is enabled whenever TR1 control bit is set.
6	C/$\overline{T}$	Timer or Counter Select: When clear, Timer 1 is incremented by the internal clock. When set, the timer counts falling edges on the T1 pin.
5	M1	Timer 1 mode select bit 1. See table below.
4	M0	Timer 1 mode select bit 0. See table below.
3	GATE	Gating control: When this bit is set, Timer/counter 0 is enabled only while the $\overline{INT0}$ pin is high and the TR0 control bit is set. When cleared, the $\overline{INT0}$ pin has no effect, and Timer 0 is enabled whenever TR0 control bit is set.
2	C/$\overline{T}$	Timer or Counter Select: When clear, Timer 0 is incremented by the internal clock. When set, the timer counts falling edges on the T0 pin.
1	M1	Timer 0 mode select bit 1. See table below.
0	M0	Timer 0 mode select bit 0. See table below.

M1, M0: Mode Select bits:

M1	M0	MODE
0	0	Mode 0: 13-bit timer/counter TLx serves as 5-bit pre-scale.
0	1	Mode 1: 16-bit timer/counter, no pre-scale.
1	0	Mode 2: 8-bit timer/counter with auto-reload from THx.
1	1	Mode 3: (Timer 0) TL0 is an 8-bit timer/counter controlled by the standard Timer0 control bits. TH0 is an 8-bit timer only controlled by Timer1 control bits. (Timer 1)

		Timer/Counter 1 is stopped.

Timer 0 LSB

Bit:	7	6	5	4	3	2	1	0
	TL0.7	TL0.6	TL0.5	TL0.4	TL0.3	TL0.2	TL0.1	TL0.0

Mnemonic: TL0 Address: 8Ah

BIT	NAME	FUNCTION
7-0	TL0.[7:0]	Timer 0 LSB.

Timer 1 LSB

Bit:	7	6	5	4	3	2	1	0
	TL1.7	TL1.6	TL1.5	TL1.4	TL1.3	TL1.2	TL1.1	TL1.0

Mnemonic: TL1 Address: 8Bh

BIT	NAME	FUNCTION
7-0	TL1.[7:0]	Timer 1 LSB.

Timer 0 MSB

Bit:	7	6	5	4	3	2	1	0
	TH0.7	TH0.6	TH0.5	TH0.4	TH0.3	TH0.2	TH0.1	TH0.0

Mnemonic: TH0 Address: 8Ch

BIT	NAME	FUNCTION
7-0	TH0.[7:0]	Timer 0 MSB.

Timer 1 MSB

Bit:	7	6	5	4	3	2	1	0
	TH1.7	TH1.6	TH1.5	TH1.4	TH1.3	TH1.2	TH1.1	TH1.0

Mnemonic: TH1 Address: 8Dh

BIT	NAME	FUNCTION
7-0	TH1.[7:0]	Timer 1 MSB.

AUXR

Bit:	7	6	5	4	3	2	1	0
	-	-	-	-	-	-	-	ALE_OFF

Mnemonic: AUXR Address: 8Eh

BIT	NAME	FUNCTION
0	ALE_OFF	1: Disenable ALE output 0: Enable ALE output

Watchdog Timer Control Register

Bit:	7	6	5	4	3	2	1	0
	ENW	CLRW	WIDL	-	-	PS2	PS1	PS0

Mnemonic: WDTC Address: 8FH

BIT	NAME	FUNCTION
7	ENW	Enable watch-dog if set.
6	CLRW	Clear watch-dog timer and Pre-scalar if set. This flag will be cleared automatically.
5	WIDL	If this bit is set, watch-dog is enabled under IDLE mode. If cleared, watch-dog is disabled under IDLE mode. Default is cleared.
2-0	PS2-0	Watch-dog Pre-scalar timer select. Pre-scalar is selected when set PS2–0 as follows:

PS2	PS1	PS0	PRE-SCALAR SELECT
0	0	0	2
0	0	1	8
0	1	0	4
0	1	1	16
1	0	0	32
1	0	1	64
1	1	0	128
1	1	1	256

Port 1

Bit:	7	6	5	4	3	2	1	0
	P1.7	P1.6	P1.5	P1.4	P1.3	P1.2	P1.1	P1.0

Mnemonic: P1 Address: 90h

BIT	NAME	FUNCTION
7-0	P1.[7:0]	General purpose I/O port. Most instructions will read the port pins in case of a port read access, however in case of read-modify-write instructions, the port latch is read.

Serial Port Control

Bit:	7	6	5	4	3	2	1	0
	SM0/FE	SM1	SM2	REN	TB8	RB8	TI	RI

Mnemonic: SCON Address: 98h

BIT	NAME	FUNCTION
7	SM0/FE	Serial port mode select bit 0 or Framing Error Flag: The SMOD0 bit in PCON SFR determines whether this bit acts as SM0 or as FE. The operation of SM0 is described below. When used as FE, this bit will be set to indicate an invalid stop bit. This bit must be manually cleared in software to clear the FE condition.
6	SM1	Serial Port mode select bit 1. See table below.
5	SM2	Multiple processors communication. Setting this bit to 1 enables the multiprocessor communication feature in mode 2 and 3. In mode 2 or 3, if SM2 is set to 1, then RI will not be activated if the received 9th data bit (RB8) is 0. In mode 1, if SM2 = 1, then RI will not be activated if a valid stop bit was not received. In mode 0, the SM2 bit controls the serial port clock. If set to 0, then the serial port runs at a divide by 12 clock of the oscillator. This gives compatibility with the standard 8052. When set to 1, the serial clock become divide by 4 of the oscillator clock. This results in faster synchronous serial communication.
4	REN	Receive enable: 0: Disable serial reception. 1: Enable serial reception.
3	TB8	This is the 9th bit to be transmitted in modes 2 and 3. This bit is set and cleared by software as desired.
2	RB8	In modes 2 and 3 this is the received 9th data bit. In mode 1, if SM2 = 0, RB8 is the stop bit that was received. In mode 0 it has no function.
1	TI	Transmit interrupt flag: This flag is set by hardware at the end of the 8th bit time in mode 0, or at the beginning of the stop bit in all other modes during serial transmission. This bit must be cleared by software.
0	RI	Receive interrupt flag: This flag is set by hardware at the end of the 8th bit time in mode 0, or halfway through the stop bits time in the other modes during serial reception. However the restrictions of SM2 apply to this bit. This bit can be cleared only by software.

SM1, SM0: Mode Select bits:

Mode	SM0	SM1	Description	Length	Baud Rate
0	0	0	Synchronous	8	Tclk divided by 4 or 12
1	0	1	Asynchronous	10	Variable
2	1	0	Asynchronous	11	Tclk divided by 32 or 64
3	1	1	Asynchronous	11	Variable

Serial Data Buffer

Bit:	7	6	5	4	3	2	1	0
	SBUF.7	SBUF.6	SBUF.5	SBUF.4	SBUF.3	SBUF.2	SBUF.1	SBUF.0

Mnemonic: SBUF Address: 99h

BIT	NAME	FUNCTION
7~0	SBUF	Serial data on the serial port is read from or written to this location. It actually consists of two separate internal 8-bit registers. One is the receive resister, and the other is the transmit buffer. Any read access gets data from the receive data buffer, while write access is to the transmit data buffer.

Port 2

Bit:	7	6	5	4	3	2	1	0
	P2.7	P2.6	P2.5	P2.4	P2.3	P2.2	P2.1	P2.0

Mnemonic: P2 Address: A0h

BIT	NAME	FUNCTION
7-0	P2.[7:0]	Port 2 is a bi-directional I/O port with internal pull-ups. This port also provides the upper address bits for accesses to external memory.

Interrupt Enable

Bit:	7	6	5	4	3	2	1	0
	EA	-	ET2	ES	ET1	EX1	ET0	EX0

Mnemonic: IE Address: A8h

BIT	NAME	FUNCTION
7	EA	Global enable. Enable/Disable all interrupts.
6	-	Reserved
5	ET2	Enable Timer 2 interrupt.
4	ES	Enable Serial Port 0 interrupt.
3	ET1	Enable Timer 1 interrupt.
2	EX1	Enable external interrupt 1.
1	ET0	Enable Timer 0 interrupt.
0	EX0	Enable external interrupt 0.

Port 3

Bit:	7	6	5	4	3	2	1	0
	P3.7	P3.6	P3.5	P3.4	P3.3	P3.2	P3.1	P3.0

Mnemonic: P3 Address: B0h

P3.7-0: General purpose Input/Output port. Most instructions will read the port pins in case of a port read access, however in case of read-modify-write instructions, the port latch is read. These alternate functions are described below:

BIT	NAME	FUNCTION
7	P3.7	$\overline{RD}$

6	P3.6	$\overline{WR}$
5	P3.5	T1
4	P3.4	T0
3	P3.3	$\overline{INT1}$
2	P3.2	$\overline{INT0}$
1	P3.1	TX
0	P3.0	RX

Interrupt High Priority

Bit:	7	6	5	4	3	2	1	0
	IPH.7	IPH.6	IPH.5	IPH.4	IPH.3	IPH.2	IPH.1	IPH.0

Mnemonic: IPH Address: B7h

BIT	NAME	FUNCTION
7	IPH.7	1: Interrupt high priority of INT3 is highest priority level.
6	IPH.6	1: Interrupt high priority of INT2 is highest priority level.
5	IPH.5	1: Interrupt high priority of Timer 2 is highest priority level.
4	IPH.4	1: Interrupt high priority of Serial Port 0 is highest priority level.
3	IPH.3	1: Interrupt high priority of Timer 1 is highest priority level.
2	IPH.2	1: Interrupt high priority of External interrupt 1 is highest priority level.
1	IPH.1	1: Interrupt high priority of Timer 0 is highest priority level.
0	IPH.0	1: Interrupt high priority of External interrupt 0 is highest priority level.

Interrupt Priority

Bit:	7	6	5	4	3	2	1	0
	-	-	PT2	PS	PT1	PX1	PT0	PX0

Mnemonic: IP Address: B8h

BIT	NAME	FUNCTION
5	PT2	1: Interrupt priority of Timer 2 is higher priority level.
4	PS	1: Interrupt priority of Serial port 0 is higher priority level.
3	PT1	1: Interrupt priority of Timer 1 is higher priority level.
2	PX1	1: Interrupt priority of External interrupt 1 is higher priority level.
1	PT0	1: Interrupt priority of Timer 0 is higher priority level.
0	PX0	1: Interrupt priority of External interrupt 0 is higher priority level.

EAPAGE ERASE PAGE Operation Modes

Bit:	7	6	5	4	3	2	1	0
	-	-	-	-	-	-	EAPG1	EAPG0

Mnemonic: EAPAGE Address: BD

BIT	NAME	FUNCTION
1	EAPG1	1.To ease PAGE1 when ease command is set.(LD flash)
0	EAPG0	1.To ease PAGE0 when ease command is set. (AP Flash)

```
;CPU Clock = 12MHz/12T mode
READ_TIME           EQU     1
PROGRAM_TIME        EQU     50
ERASE_TIME          EQU     5000
```

Erase_AP Flash:

```
    mov     EAPAGE,#01h         ;set EAPAGE is APROM
    mov     SFRCN,#ERASE_ROM
    mov     TL0,#LOW (65536-ERASE_TIME)
    mov     TH0,#HIGH(65536-ERASE_TIME)
    setb    TR0
    mov     CHPCON,#00000011b
    mov     EAPAGE,#00h         ;clear EAPAGE
    clr     TF0
    clr     TR0
    ret
```

Erase_LD Flash:

```
    mov     EAPAGE,#02h         ;set EAPAGE is LDROM
    mov     SFRCN,#ERASE_ROM
    mov     TL0,#LOW (65536-ERASE_TIME)
    mov     TH0,#HIGH(65536-ERASE_TIME)
    setb    TR0
    mov     CHPCON,#00000011b
    mov     EAPAGE,#00h         ;clear EAPAGE
    clr     TF0
    clr     TR0
    ret
```

Chip Control

Bit:	7	6	5	4	3	2	1	0

SWRST	-	-	-	-	-	FBOOTSL	ENP

Mnemonic: CHPCON Address: BFh

Bit	Name	Function
7	SWRST	When this bit is set to 1, and both FBOOTSL and ENP are set to 1. It will enforce microcontroller reset to initial condition just like power on reset. This action will re-boot the microcontroller and start to normal operation. To read this bit can determine that the F02KBOOT mode is running. Note: Software Reset only LDROM jump to APROM, APROM can't soft-ware reset to LDROM.
1	FBOOTSL	The Loader Program Location Select. 0: The Loader Program locates at the APROM flash memory bank. 1: The Loader Program locates at the LD flash memory bank.
0	ENP	FLASH EPROM Programming Enable. 1: Enable in-system programming mode. In this mode, erase, program and read operations are achieved. 0: Disable in-system programming mode. The on-chip flash memory is read-only.

External Interrupt Control

Bit:	7	6	5	4	3	2	1	0
	PX3	EX3	IE3	IT3	PX2	EX2	IE2	IT2

Mnemonic: XICON Address: C0h

BIT	NAME	FUNCTION
7	PX3	External interrupt 3 priority is higher if set this bit to 1
6	EX3	Enable External interrupt 3 if set this bit to 1
5	IE3	If IT3 = 1, IE3 is set/cleared automatically by hardware when interrupt is de-tected/serviced
4	IT3	External interrupt 3 is falling-edge/low-level triggered when this bit is set/cleared by software
3	PX2	External interrupt 2 priority is higher if set this to 1
2	EX2	Enable External interrupt 2 if set this bit to 1
1	IE2	If IT2 = 1, IE2 is set/cleared automatically by hardware when interrupt is de-tected/serviced
0	IT2	External interrupt 2 is falling-edge/low-level triggered when this bit is set/cleared by software

SFR program of address low

Bit:	7	6	5	4	3	2	1	0
	SFRAL.7	SFRAL.6	SFRAL.5	SFRAL.4	SFRAL.3	SFRAL.2	SFRAL.1	SFRAL.0

Mnemonic: SFRAL Address: C4h

BIT	NAME	FUNCTION
7-0	SFRAL.[7:0]	The programming address of on-chip flash memory in programming mode. SFRFAL contains the low-order byte of address.

SFR program of address high

Bit:	7	6	5	4	3	2	1	0
	SFRAH.7	SFRAH.6	SFRAH.5	SFRAH.4	SFRAH.3	SFRAH.2	SFRAH.1	SFRAH.0

Mnemonic: SFRAH Address: C5h

BIT	NAME	FUNCTION
7-0	SFRAH.[7:0]	The programming address of on-chip flash memory in programming mode. SFRFAH contains the high-order byte of address.

SFR program For Data

Bit:	7	6	5	4	3	2	1	0
	SFRFD.7	SFRFD.6	SFRFD.5	SFRFD.4	SFRFD.3	SFRFD.2	SFRFD.1	SFRFD.0

Mnemonic: SFRFD Address: C6h

BIT	NAME	FUNCTION
7-0	SFRFD.[7:0]	The programming data for on-chip flash memory in programming mode.

SFR for Program Control

Bit:	7	6	5	4	3	2	1	0
	-		OEN	CEN	CTRL3	CTRL2	CTRL1	CTRL0

Mnemonic: SFRCN Address: C7h

BIT	NAME	FUNCTION
5	OEN	FLASH EPROM output enable.
4	CEN	FLASH EPROM chip enable.
3-0	CTRL[3:0]	CTRL[3:0]: The flash control signals

Mode	OEN	CEN	CTRL<3:0>	SFRAH, SFRAL	SFRFD
Flash Standby	1	1	X	X	X
Read Company ID	0	0	1011	0FFh, 0FFh	Data out
Read Device ID High	0	0	1100	0FFh, 0FFh	Data out
Read Device ID Low	1	0	1100	0FFh, 0FEh	Data out
Erase APROM	1	0	0010	X	X
Erase Verify APROM	0	0	1001	Address in	Data out
Program APROM	1	0	0001	Address in	Data in

Program Verify APROM	0	0	1010	Address in	Data out
Read APROM	0	0	0000	Address in	Data out

Timer 2 Control

Bit:	7	6	5	4	3	2	1	0
	TF2	EXF2	RCLK	TCLK	EXEN2	TR2	C / $\overline{T2}$	CP / $\overline{RL2}$

Mnemonic: T2CON Address: C8h

BIT	NAME	FUNCTION
7	TF2	Timer 2 overflow flag: This bit is set when Timer 2 overflows. It is also set when the count is equal to the capture register in down count mode. It can be set only if RCLK and TCLK are both 0. It is cleared only by software. Software can also set or clear this bit.
6	EXF2	Timer 2 External Flag: A negative transition on the T2EX pin (P1.1) or timer 2 overflow will cause this flag to set based on the CP / $\overline{RL2}$, EXEN2 and DCEN bits. If set by a negative transition, this flag must be cleared by software. Setting this bit in software or detection of a negative transition on T2EX pin will force a timer interrupt if enabled.
5	RCLK	Receive Clock Flag: This bit determines the serial port 0 time-base when receiving data in serial modes 1 or 3. If it is 0, then timer 1 overflow is used for baud rate generation, otherwise timer 2 overflow is used. Setting this bit forces timer 2 in baud rate generator mode.
4	TCLK	Transmit Clock Flag: This bit determines the serial port 0 time-base when transmitting data in modes 1 and 3. If it is set to 0, the timer 1 overflow is used to generate the baud rate clock otherwise timer 2 overflow is used. Setting this bit forces timer 2 in baud rate generator mode.
3	EXEN2	Timer 2 External Enable. This bit enables the capture/reload function on the T2EX pin if Timer 2 is not generating baud clocks for the serial port. If this bit is 0, then the T2EX pin will be ignored, otherwise a negative transition detected on the T2EX pin will result in capture or reload.
2	TR2	Timer 2 Run Control. This bit enables/disables the operation of timer 2. Clearing this bit will halt the timer 2 and preserve the current count in TH2, TL2.
1	C / $\overline{T2}$	Counter/Timer Select. This bit determines whether timer 2 will function as a timer or a counter. Independent of this bit, the timer will run at 2 clocks per tick when used in baud rate generator mode.
0	CP / $\overline{RL2}$	Capture/Reload Select. This bit determines whether the capture or reload function will be used for timer 2. If either RCLK or TCLK is set, this bit will be ignored and the timer will function in an auto-reload mode following each overflow. If the bit is 0 then auto-reload will occur when timer 2 overflows or a falling edge is detected on T2EX pin if EXEN2 = 1. If this bit is 1, then timer 2 captures will occur when a falling edge is detected on T2EX pin if EXEN2 = 1.

Timer 2 Mode Control

Bit:	7	6	5	4	3	2	1	0
		-	-	-	-	-	-	DCEN

Mnemonic: T2MOD Address: C9h

BIT	NAME	FUNCTION
0	DCEN	Down Count Enable: This bit, in conjunction with the T2EX pin, controls the direction that timer 2 counts in 16-bit auto-reload mode.

Timer 2 Capture LSB

Bit:	7	6	5	4	3	2	1	0
	RCAP2L.7	RCAP2L.6	RCAP2L.5	RCAP2L.4	RCAP2L.3	RCAP2L.2	RCAP2L.1	RCAP2L.0

Mnemonic: RCAP2L Address: CAh

BIT	NAME	FUNCTION
7-0	RCAP2L.[7:0]	This register is used to capture the TL2 value when a timer 2 is configured in capture mode. RCAP2L is also used as the LSB of a 16-bit reload value when timer 2 is configured in auto-reload mode.

Timer 2 Capture MSB

Bit:	7	6	5	4	3	2	1	0
	RCAP2h.7	RCAP2h.6	RCAP2h.5	RCAP2h.4	RCAP2h.3	RCAP2h.2	RCAP2h.1	RCAP2h.0

Mnemonic: RCAP2H Address: CBh

BIT	NAME	FUNCTION
7-0	RCAP2H.[7:0]	This register is used to capture the TH2 value when a timer 2 is configured in capture mode. RCAP2H is also used as the MSB of a 16-bit reload value when timer 2 is configured in auto-reload mode.

Timer 2 LSB

Bit:	7	6	5	4	3	2	1	0
	TL2.7	TL2.6	TL2.5	TL2.4	TL2.3	TL2.2	TL2.1	TL2.0

Mnemonic: TL2 Address: CCh

BIT	NAME	FUNCTION
7-0	TL2.[7:0]	Timer 2 LSB

Timer 2 MSB

Bit:	7	6	5	4	3	2	1	0
	TH2.7	TH2.6	TH2.5	TH2.4	TH2.3	TH2.2	TH2.1	TH2.0

Mnemonic: TH2 Address: CDh

BIT	NAME	FUNCTION
7-0	TH2.[7:0]	Timer 2 MSB

Program Status Word

Bit:	7	6	5	4	3	2	1	0
	CY	AC	F0	RS1	RS0	OV	F1	P

Mnemonic: PSW Address: D0h

BIT	NAME	FUNCTION
7	CY	Carry flag: Set for an arithmetic operation which results in a carry being generated from the ALU. It is also used as the accumulator for the bit operations.
6	AC	Auxiliary carry: Set when the previous operation resulted in a carry from the high order nibble.
5	F0	User flag 0: The General purpose flag that can be set or cleared by the user.
4	RS1	Register bank select bits:
3	RS0	Register bank select bits:
2	OV	Overflow flag: Set when a carry was generated from the seventh bit but not from the 8th bit as a result of the previous operation, or vice-versa.
1	F1	User Flag 1: The General purpose flag that can be set or cleared by the user by software.
0	P	Parity flag: Set/cleared by hardware to indicate odd/even number of 1's in the accumulator.

Port 4

Bit:	7	6	5	4	3	2	1	0
	-	-	-	-	P4.3	P4.2	P4.1	P4.0

Mnemonic: P4 Address: D8h

Another bit-addressable port P4 is also available and only 4 bits (P4<3:0>) can be used. This port address is located at 0D8H with the same function as that of port P1, except the P4.3 and P4.2 are alternative function pins. It can be used as general I/O pins or external interrupt input sources ($\overline{INT2}$, $\overline{INT3}$).

ACCUMULATOR

Bit:	7	6	5	4	3	2	1	0
	ACC.7	ACC.6	ACC.5	ACC.4	ACC.3	ACC.2	ACC.1	ACC.0

Mnemonic: ACC Address: E0h

Bit	Name	Function

7-0	ACC	The A or ACC register is the standard 8052 accumulator.

B Register

Bit:	7	6	5	4	3	2	1	0
	B.7	B.6	B.5	B.4	B.3	B.2	B.1	B.0

Mnemonic: B Address: F0h

Bit	Name	Function
7-0	B	The B register is the standard 8052 register that serves as a second accumulator.

10 INSTRUCTION

The W78I054D/W78I052D/W78I051D series execute all the instructions of the standard 8052 family. The operations of these instructions, as well as their effects on flag and status bits, are exactly the same.

Op-code	HEX Code	Bytes	W78I054D/W78I052D/W78I051D series Clock cycles
NOP	00	1	12
ADD A, R0	28	1	12
ADD A, R1	29	1	12
ADD A, R2	2A	1	12
ADD A, R3	2B	1	12
ADD A, R4	2C	1	12
ADD A, R5	2D	1	12
ADD A, R6	2E	1	12
ADD A, R7	2F	1	12
ADD A, @R0	26	1	12
ADD A, @R1	27	1	12
ADD A, direct	25	2	12
ADD A, #data	24	2	12
ADDC A, R0	38	1	12
ADDC A, R1	39	1	12
ADDC A, R2	3A	1	12
ADDC A, R3	3B	1	12
ADDC A, R4	3C	1	12
ADDC A, R5	3D	1	12
ADDC A, R6	3E	1	12
ADDC A, R7	3F	1	12
ADDC A, @R0	36	1	12
ADDC A, @R1	37	1	12
ADDC A, direct	35	2	12
ADDC A, #data	34	2	12
SUBB A, R0	98	1	12
SUBB A, R1	99	1	12
SUBB A, R2	9A	1	12

Op-code	HEX Code	Bytes	W78I054D/W78I052D/W78I051D series Clock cycles
SUBB A, R3	9B	1	12
SUBB A, R4	9C	1	12
SUBB A, R5	9D	1	12
SUBB A, R6	9E	1	12
SUBB A, R7	9F	1	12
SUBB A, @R0	96	1	12
SUBB A, @R1	97	1	12
SUBB A, direct	95	2	12
SUBB A, #data	94	2	12
INC A	04	1	12
INC R0	08	1	12
INC R1	09	1	12
INC R2	0A	1	12
INC R3	0B	1	12
INC R4	0C	1	12
INC R5	0D	1	12
INC R6	0E	1	12
INC R7	0F	1	12
INC @R0	06	1	12
INC @R1	07	1	12
INC direct	05	2	12
INC DPTR	A3	1	24
DEC A	14	1	12
DEC R0	18	1	12
DEC R1	19	1	12
DEC R2	1A	1	12
DEC R3	1B	1	12
DEC R4	1C	1	12
DEC R5	1D	1	12
DEC R6	1E	1	12
DEC R7	1F	1	12
DEC @R0	16	1	12

Op-code	HEX Code	Bytes	W78I054D/W78I052D/W78I051D series Clock cycles
DEC @R1	17	1	12
DEC direct	15	2	12
MUL AB	A4	1	48
DIV AB	84	1	48
DA A	D4	1	12
ANL A, R0	58	1	12
ANL A, R1	59	1	12
ANL A, R2	5A	1	12
ANL A, R3	5B	1	12
ANL A, R4	5C	1	12
ANL A, R5	5D	1	12
ANL A, R6	5E	1	12
ANL A, R7	5F	1	12
ANL A, @R0	56	1	12
ANL A, @R1	57	1	12
ANL A, direct	55	2	12
ANL A, #data	54	2	12
ANL direct, A	52	2	12
ANL direct, #data	53	3	24
ORL A, R0	48	1	12
ORL A, R1	49	1	12
ORL A, R2	4A	1	12
ORL A, R3	4B	1	12
ORL A, R4	4C	1	12
ORL A, R5	4D	1	12
ORL A, R6	4E	1	12
ORL A, R7	4F	1	12
ORL A, @R0	46	1	12
ORL A, @R1	47	1	12
ORL A, direct	45	2	12
ORL A, #data	44	2	12
ORL direct, A	42	2	12

Op-code	HEX Code	Bytes	W78I054D/W78I052D/W78I051D series Clock cycles
ORL direct, #data	43	3	24
XRL A, R0	68	1	12
XRL A, R1	69	1	12
XRL A, R2	6A	1	12
XRL A, R3	6B	1	12
XRL A, R4	6C	1	12
XRL A, R5	6D	1	12
XRL A, R6	6E	1	12
XRL A, R7	6F	1	12
XRL A, @R0	66	1	12
XRL A, @R1	67	1	12
XRL A, direct	65	2	12
XRL A, #data	64	2	12
XRL direct, A	62	2	12
XRL direct, #data	63	3	24
CLR A	E4	1	12
CPL A	F4	1	12
RL A	23	1	12
RLC A	33	1	12
RR A	03	1	12
RRC A	13	1	12
SWAP A	C4	1	12
MOV A, R0	E8	1	12
MOV A, R1	E9	1	12
MOV A, R2	EA	1	12
MOV A, R3	EB	1	12
MOV A, R4	EC	1	12
MOV A, R5	ED	1	12
MOV A, R6	EE	1	12
MOV A, R7	EF	1	12
MOV A, @R0	E6	1	12
MOV A, @R1	E7	1	12

Op-code	HEX Code	Bytes	W78I054D/W78I052D/W78I051D series Clock cycles
MOV A, direct	E5	2	12
MOV A, #data	74	2	12
MOV R0, A	F8	1	12
MOV R1, A	F9	1	12
MOV R2, A	FA	1	12
MOV R3, A	FB	1	12
MOV R4, A	FC	1	12
MOV R5, A	FD	1	12
MOV R6, A	FE	1	12
MOV R7, A	FF	1	12
MOV R0, direct	A8	2	24
MOV R1, direct	A9	2	24
MOV R2, direct	AA	2	24
MOV R3, direct	AB	2	24
MOV R4, direct	AC	2	24
MOV R5, direct	AD	2	24
MOV R6, direct	AE	2	24
MOV R7, direct	AF	2	24
MOV R0, #data	78	2	12
MOV R1, #data	79	2	12
MOV R2, #data	7A	2	12
MOV R3, #data	7B	2	12
MOV R4, #data	7C	2	12
MOV R5, #data	7D	2	12
MOV R6, #data	7E	2	12
MOV R7, #data	7F	2	12
MOV @R0, A	F6	1	12
MOV @R1, A	F7	1	12
MOV @R0, direct	A6	2	24
MOV @R1, direct	A7	2	24
MOV @R0, #data	76	2	12
MOV @R1, #data	77	2	12

Op-code	HEX Code	Bytes	W78I054D/W78I052D/W78I051D series Clock cycles
MOV direct, A	F5	2	12
MOV direct, R0	88	2	24
MOV direct, R1	89	2	24
MOV direct, R2	8A	2	24
MOV direct, R3	8B	2	24
MOV direct, R4	8C	2	24
MOV direct, R5	8D	2	24
MOV direct, R6	8E	2	24
MOV direct, R7	8F	2	24
MOV direct, @R0	86	2	24
MOV direct, @R1	87	2	24
MOV direct, direct	85	3	24
MOV direct, #data	75	3	24
MOV DPTR, #data 16	90	3	24
MOVC A, @A+DPTR	93	1	24
MOVC A, @A+PC	83	1	24
MOVX A, @R0	E2	1	24
MOVX A, @R1	E3	1	24
MOVX A, @DPTR	E0	1	24
MOVX @R0, A	F2	1	24
MOVX @R1, A	F3	1	24
MOVX @DPTR, A	F0	1	24
PUSH direct	C0	2	24
POP direct	D0	2	24
XCH A, R0	C8	1	12
XCH A, R1	C9	1	12
XCH A, R2	CA	1	12
XCH A, R3	CB	1	12
XCH A, R4	CC	1	12
XCH A, R5	CD	1	12
XCH A, R6	CE	1	12
XCH A, R7	CF	1	12

Op-code	HEX Code	Bytes	W78I054D/W78I052D/W78I051D series Clock cycles
XCH A, @R0	C6	1	12
XCH A, @R1	C7	1	12
XCHD A, @R0	D6	1	12
XCHD A, @R1	D7	1	12
XCH A, direct	C5	2	24
CLR C	C3	1	12
CLR bit	C2	2	12
SETB C	D3	1	12
SETB bit	D2	2	12
CPL C	B3	1	12
CPL bit	B2	2	12
ANL C, bit	82	2	24
ANL C, /bit	B0	2	24
ORL C, bit	72	2	24
ORL C, /bit	A0	2	24
MOV C, bit	A2	2	12
MOV bit, C	92	2	24
ACALL addr11	71, 91, B1, 11, 31, 51, D1, F1	2	24
LCALL addr16	12	3	24
RET	22	1	24
RETI	32	1	24
AJMP ADDR11	01, 21, 41, 61, 81, A1, C1, E1	2	24
LJMP addr16	02	3	24
JMP @A+DPTR	73	1	24
SJMP rel	80	2	24
JZ rel	60	2	24
JNZ rel	70	2	24
JC rel	40	2	24
JNC rel	50	2	24

Op-code	HEX Code	Bytes	W78I054D/W78I052D/W78I051D series Clock cycles
JB bit, rel	20	3	24
JNB bit, rel	30	3	24
JBC bit, rel	10	3	24
CJNE A, direct, rel	B5	3	24
CJNE A, #data, rel	B4	3	24
CJNE @R0, #data, rel	B6	3	24
CJNE @R1, #data, rel	B7	3	24
CJNE R0, #data, rel	B8	3	24
CJNE R1, #data, rel	B9	3	24
CJNE R2, #data, rel	BA	3	24
CJNE R3, #data, rel	BB	3	24
CJNE R4, #data, rel	BC	3	24
CJNE R5, #data, rel	BD	3	24
CJNE R6, #data, rel	BE	3	24
CJNE R7, #data, rel	BF	3	24
DJNZ R0, rel	D8	2	24
DJNZ R1, rel	D9	2	24
DJNZ R5, rel	DD	2	24
DJNZ R2, rel	DA	2	24
DJNZ R3, rel	DB	2	24
DJNZ R4, rel	DC	2	24
DJNZ R6, rel	DE	2	24
DJNZ R7, rel	DF	2	24
DJNZ direct, rel	D5	3	24

Table 10-1: Instruction Set for W78I054D/W78I052D/W78I051D

11 INSTRUCTION TIMING

A machine cycle consists of a sequence of 6 states, numbered S1 through S6. Each state time lasts for two oscillator periods. Thus a machine cycle takes 12 oscillator periods or 1us if the oscillator frequency is 12MHz.

Each state is divided into a Phase 1 half and a Phase 2 half. The fetch/execute sequences in states and phases for various kinds of instructions. Normally two program fetches are generated during each machine cycle, even if the instruction being executed doesn't require it. If the instruction being executed doesn't need more code bytes, the CPU simply ignores the extra fetch, and the Program Counter is not incremented. Execution of a one-cycle instruction begins during State 1 of the machine cycle, when the OPCODE is latched into the Instruction Register. A second fetch occurs during S4 of the same machine cycle. Execution is complete at the end of State 6 of this machine cycle.

The MOVX instructions take two machine cycles to execute. No program fetch is generated during the second cycle of a MOVX instruction. This is the only time program fetches are skipped. The fetch/execute sequence for MOVX instructions.

The fetch/execute sequences are the same whether the Program Memory is internal or external to the chip. Execution times do not depend on whether the Program Memory is internal or external.

the signals and timing involved in program fetches when the Program Memory is external. If Program Memory is external, then the Program Memory read strobe PSEN is normally activated twice per machine cycle. If an access to external Data Memory occurs, two PSEN pulse are skipped, because the address and data bus are being used for the Data Memory access. Note that a Data Memory bus cycle takes twice as much time as a Program Memory bus cycle.

12 POWER MANAGEMENT

The W78I054D/W78I052D/W78I051D has several features that help the user to control the power consumption of the device. The power saved features have basically the POWER DOWN mode and the IDLE mode of operation.

12.1 Idle Mode

The user can put the device into idle mode by writing 1 to the bit PCON.0. The instruction that sets the idle bit is the last instruction that will be executed before the device goes into Idle Mode. In the Idle mode, the clock to the CPU is halted, but not to the Interrupt, Timer, Watchdog timer and Serial port blocks. This forces the CPU state to be frozen; the Program counter, the Stack Pointer, the Program Status Word, the Accumulator and the other registers hold their contents. The port pins hold the logical states they had at the time Idle was activated. The Idle mode can be terminated in two ways. Since the interrupt controller is still active, the activation of any enabled interrupt can wake up the processor. This will automatically clear the Idle bit, terminate the Idle mode, and the Interrupt Service Routine(ISR) will be executed. After the ISR, execution of the program will continue from the instruction which put the device into Idle mode.

The Idle mode can also be exited by activating the reset. The device can put into reset either by applying a high on the external RST pin, a Power on reset condition or a Watchdog timer reset. The external reset pin has to be held high for at least two machine cycles i.e. 24 clock periods to be recognized as a valid reset. In the reset condition the program counter is reset to 0000h and all the SFRs are set to the reset condition. Since the clock is already running there is no delay and execution starts immediately.

12.2 Power Down Mode

The device can be put into Power Down mode by writing 1 to bit PCON.1. The instruction that does this will be the last instruction to be executed before the device goes into Power Down mode. In the Power Down mode, all the clocks are stopped and the device comes to a halt. All activity is completely stopped and the power consumption is reduced to the lowest possible value. The port pins output the values held by their respective SFRs.

The W78I054D/W78I052D/W78I051D will exit the Power Down mode with a reset or by an external interrupt pin enabled as level detect. An external reset can be used to exit the Power down state. The high on RST pin terminates the Power Down mode, and restarts the clock. The program execution will restart from 0000h. In the Power down mode, the clock is stopped, so the Watchdog timer cannot be used to provide the reset to exit Power down mode.

The W78I054D/W78I052D/W78I051D can be woken from the Power Down mode by forcing an external interrupt pin activated, provided the corresponding interrupt is enabled, while the global enable(EA) bit is set and the external input has been set to a level detect mode. If these conditions are met, then the high level on the external pin re-starts the oscillator. Then device executes the interrupt service routine for the corresponding external interrupt. After the interrupt service routine is completed, the program execution returns to the instruction after one which put the device into Power Down mode and continues from there.

13 RESET CONDITIONS

The user has several hardware related options for placing the W78I054D/W78I052D/W78I051D into reset condition. In general, most register bits go to their reset value irrespective of the reset condition, but there are a few flags whose state depends on the source of reset. The user can use these flags to determine the cause of reset using software.

13.1 Sources of reset

13.1.1 External Reset

The device continuously samples the RST pin at state S5P2 of every machine cycle. Therefore the RST pin must be held for at least 2 machine cycles (24 clock cycles) to ensure detection of a valid RST high. The reset circuitry then synchronously applies the internal reset signal. Thus the reset is a synchronous operation and requires the clock to be running to cause an external reset. For more timing information, please reference the character 21.4.5 (Page 77).

Once the device is in reset condition, it will remain so as long as RST is 1. Even after RST is deactivated, the device will continue to be in reset state for up to two machine cycles, and then begin program execution from 0000h. There is no flag associated with the external reset condition.

13.1.2 Software Reset

The W78I054D/W78I052D/W78I051D offers a software reset to switch back to the AP Flash EPROM. Setting CHPCON bits 0, 1 and 7 to logic-1 creates software reset to reset the CPU to start APROM code. Note: Software Reset only LDROM jump to APROM, APROM can't software reset to LDROM.

13.1.3 Watchdog Timer Reset

The Watchdog timer is a free running timer with programmable time-out intervals. The user can clear the watchdog timer at any time, causing it to restart the count. When the time-out interval is reached an interrupt flag is set. If the Watchdog reset is enabled and the watchdog timer is not cleared, the watchdog timer will generate a reset. This places the device into the reset condition. The reset condition is maintained by hardware for two machine cycles. Once the reset is removed the device will begin execution from 0000h.

13.1.4 RESET STATE

Most of the SFRs and registers on the device will go to the same condition in the reset state. The Program Counter is forced to 0000h and is held there as long as the reset condition is applied. However, the reset state does not affect the on-chip RAM. The data in the RAM will be preserved during the reset. However, the stack pointer is reset to 07h, and therefore the stack contents will be lost. The RAM contents will be lost if the VDD falls below approximately 2V, as this is the minimum voltage level required for the RAM to operate normally. Therefore after a first time power on reset the RAM contents will be indeterminate. During a power fail condition, if the power falls below 2V, the RAM contents are lost.

After a reset most SFRs are cleared. Interrupts and Timers are disabled. The Watchdog timer is disabled if the reset source was a POR. The port SFRs have 0FFh written into them which puts the port pins in a high state.

13.2 Interrupts

The W78I054D/W78I052D/W78I051D has a 4 priority level interrupt structure with 8 interrupt sources. Each of the interrupt sources has an individual priority bit, flag, interrupt vector and enable bit. In addition, the interrupts can be globally enabled or disabled.

13.3 Interrupt Sources

The External Interrupts $\overline{INT0}$ and $\overline{INT1}$ can be either edge triggered or level triggered, depending on bits IT0 and IT1. The bits IE0 and IE1 in the TCON register are the flags which are checked to generate the interrupt. In the edge triggered mode, the INTx inputs are sampled in every machine cycle. If the sample is high in one cycle and low in the next, then a high to low transition is detected and the interrupts request flag IEx in TCON o is set. The flag bit requests the interrupt. Since the external interrupts are sampled every machine cycle, they have to be held high or low for at least one complete machine cycle. The IEx flag is automatically cleared when the service routine is called. If the level triggered mode is selected, then the requesting source has to hold the pin low till the interrupt is serviced. The IEx flag will not be cleared by the hardware on entering the service routine. If the interrupt continues to be held low even after the service routine is completed, then the processor may acknowledge another interrupt request from the same source. Note that the external interrupts $\overline{INT2}$ and $\overline{INT3}$. By default, the individual interrupt flag corresponding to external interrupt 2 to 3 must be cleared manually by software.

The Timer 0 and 1 Interrupts are generated by the TF0 and TF1 flags. These flags are set by the overflow in the Timer 0 and Timer 1. The TF0 and TF1 flags are automatically cleared by the hardware when the timer interrupt is serviced. The Timer 2 interrupt is generated by a logical OR of the TF2 and the EXF2 flags. These flags are set by overflow or capture/reload events in the timer 2 operation. The hardware does not clear these flags when a timer 2 interrupt is executed. Software has to resolve the cause of the interrupt between TF2 and EXF2 and clear the appropriate flag.

The Serial block can generate interrupts on reception or transmission. There are two interrupt sources from the Serial block, which are obtained by the RI and TI bits in the SCON SFR, These bits are not automatically cleared by the hardware, and the user will have to clear these bits using software.

All the bits that generate interrupts can be set or reset by hardware, and thereby software initiated interrupts can be generated. Each of the individual interrupts can be enabled or disabled by setting or clearing a bit in the IE SFR. IE also has a global enable/disable bit EA, which can be cleared to disable all the interrupts, at once.

Source	Vector Address	Source	Vector Address
External Interrupt 0	0003h	Timer 0 Overflow	000Bh
External Interrupt 1	0013h	Timer 1 Overflow	001Bh
Serial Port	0023h	Timer 2 Overflow	002Bh
External Interrupt 2	0033h	External Interrupt 3	003Bh

Table 13- 1 W78I054D/W78I052D/W78I051D interrupt vector table

13.4 Priority Level Structure

There are 4 priority levels for the interrupts high, low. Naturally, a higher priority interrupt cannot be interrupted by a lower priority interrupt. However there exists a pre-defined hierarchy amongst the interrupts themselves. This hierarchy comes into play when the interrupt controller has to resolve simultaneous requests having the same priority level. This hierarchy is defined as shown on Table.

PRIORITY BITS		INTERRUPT PRIORITY LEVEL
IPH	IP/ XICON.7/ XICON.3	
0	0	Level 0 (lowest priority)
0	1	Level 1
1	0	Level 2
1	1	Level 3 (highest priority)

The interrupt flags are sampled every machine cycle. In the same machine cycle, the sampled interrupts are polled and their priority is resolved. If certain conditions are met then the hardware will execute an internally generated LCALL instruction which will vector the process to the appropriate interrupt vector address. The conditions for generating the LCALL are;

1. An interrupt of equal or higher priority is not currently being serviced.
2. The current polling cycle is the last machine cycle of the instruction currently being executed.
3. The current instruction does not involve a write to IE, IP, IPH, XICON registers and is not a RETI.

If any of these conditions are not met, then the LCALL will not be generated. The polling cycle is repeated every machine cycle, with the interrupts sampled in the same machine cycle. If an interrupt flag is active in one cycle but not responded to, and is not active when the above conditions are met, the denied interrupt will not be serviced. This means that active interrupts are not remembered; every polling cycle is new.

The processor responds to a valid interrupt by executing an LCALL instruction to the appropriate service routine. This may or may not clear the flag which caused the interrupt. In case of Timer interrupts, the TF0 or TF1 flags are cleared by hardware whenever the processor vectors to the appropriate timer service routine. In case of external interrupt, /INT0 and /INT1, the flags are cleared only if they are edge triggered. In case of Serial interrupts, the flags are not cleared by hardware. In the case of Timer 2 interrupt, the flags are not cleared by hardware. The hardware LCALL behaves exactly like the software LCALL instruction. This instruction saves the Program Counter contents onto the Stack, but does not save the Program Status Word PSW. The PC is reloaded with the vector address of that interrupt which caused the LCALL. These address of vector for the different sources are as shown on the below table. The vector table is not evenly spaced; this is to accommodate future expansions to the device family.

Execution continues from the vectored address till an RETI instruction is executed. On execution of the RETI instruction the processor pops the Stack and loads the PC with the contents at the top of the stack. The user must take care that the status of the stack is restored to what is was after the hardware LCALL, if the execution is to return to the interrupted program. The processor does not notice anything if the stack contents are modified and will proceed with execution from the address put back into PC. Note that a RET instruction would perform exactly the same process as a RETI instruction, but it would not inform the Interrupt Controller that the interrupt service routine is completed, and would leave the controller still thinking that the service routine is underway.

Each interrupt source can be individually enabled or disabled by setting or clearing a bit in registers IE. The IE register also contains a global disable bit, EA, which disables all interrupts at once.

Each interrupt source can be individually programmed to one of 2 priority levels by setting or clearing bits in the IP registers. An interrupt service routine in progress can be interrupted by a higher priority interrupt, but not by another interrupt of the same or lower priority. The highest priority interrupt service cannot be interrupted by any other interrupt source. So, if two requests of different priority levels are received simultaneously, the request of higher priority level is serviced.

If requests of the same priority level are received simultaneously, an internal polling sequence determines which request is serviced. This is called the arbitration ranking. Note that the arbitration ranking is only used to resolve simultaneous requests of the same priority level.

Table below summarizes the interrupt sources, flag bits, vector addresses, enable bits, priority bits, arbitration ranking, and External interrupt may wake up the CPU from Power Down mode.

Source	Flag	Vector address	Enable bit	Interrupt Priority	Flag cleared by	Arbitration ranking	Power-down wakeup
External Interrupt 0	IE0	0003H	EX0 (IE.0)	IPH.0, IP.0	Hardware, software	1(highest)	Yes
Timer 0 Overflow	TF0	000BH	ET0 (IE.1)	IPH.1, IP.1	Hardware, software	2	No
External Interrupt 1	IE1	0013H	EX1 (IE.2)	IPH.2, IP.2	Hardware, software	3	Yes
Timer 1 Overflow	TF1	001BH	ET1 (IE.3)	IPH.3, IP.3	Hardware, software	4	No
Serial Port	RI + TI	0023H	ES (IE.4)	IPH.4, IP.4	Software	5	No
Timer 2 Over-flow/Match	TF2	002BH	ET2 (IE.5)	IPH.5, IP.5	Software	6	No
External Interrupt 2	IE2	0033H	EX2 (XICON.2)	IPH.6, PX2	Hardware, software	7	Yes
External Interrupt 3	IE3	003BH	EX3 (XICON.6)	IPH.7, PX3	Hardware, software	8(lowest)	Yes

Table 13- 2 Summary of interrupt sources

13.5 Interrupt Response Time

The response time for each interrupt source depends on several factors, such as the nature of the interrupt and the instruction underway. In the case of external interrupts $\overline{INT0}$ and $\overline{INT1}$, they are sampled at S5P2 of every machine cycle and then their corresponding interrupt flags IEx will be set or reset. The Timer 0 and 1 overflow flags are set at C3 of the machine cycle in which overflow has occurred. These flag values are polled only in the next machine cycle. If a request is active and all three conditions are met, then the hardware generated LCALL is executed. This LCALL itself takes four machine cycles to be completed. Thus there is a minimum time of five machine cycles between the interrupt flag being set and the interrupt service routine being executed.

A longer response time should be anticipated if any of the three conditions are not met. If a higher or equal priority is being serviced, then the interrupt latency time obviously depends on the nature of the

service routine currently being executed. If the polling cycle is not the last machine cycle of the instruction being executed, then an additional delay is introduced. The maximum response time (if no other interrupt is in service) occurs if the device is performing a write to IE, IP, IPH and then executes a MUL or DIV instruction.

13.6 Interrupt Inputs

Since the external interrupt pins are sampled once each machine cycle, an input high or low should hold for at least one machine cycle to ensure proper sampling. If the external interrupt is high for at least one machine cycle, and then hold it low for at least one machine cycle. This is to ensure that the transition is seen and that interrupt request flag IEn is set. IEn is automatically cleared by the CPU when the service routine is called.

If the external interrupt is level-activated, the external source must hold the request active until the requested interrupt is actually generated. If the external interrupt is still asserted when the interrupt service routine is completed another interrupt will be generated. It is not necessary to clear the interrupt flag IEn when the interrupt is level sensitive, it simply tracks the input pin level.

If an external interrupt is enabled when the W78I054D/W78I052D/W78I051D is put into Power Down or Idle mode, the interrupt will cause the processor to wake up and resume operation. Refer to the section on Power Reduction Modes for details.

14 PROGRAMMABLE TIMERS/COUNTERS

The W78I054D/W78I052D/W78I051D series have Three 16-bit programmable timer/counters. A machine cycle equals 12 or 6 oscillator periods, and it depends on 12T mode or 6T mode that the user configured this device.

14.1 Timer/Counters 0 & 1

W78I054D/W78I052D/W78I051D has two 16-bit Timer/Counters. Each of these Timer/Counters has two 8 bit registers which form the 16 bit counting register. For Timer/Counter 0 they are TH0, the upper 8 bits register, and TL0, the lower 8 bit register. Similarly Timer/Counter 1 has two 8 bit registers, TH1 and TL1. The two can be configured to operate either as timers, counting machine cycles or as counters counting external inputs.

When configured as a "Timer", the timer counts clock cycles. The timer clock can be programmed to be thought of as 1/12 of the system clock. In the "Counter" mode, the register is incremented on the falling edge of the external input pin, T0 in case of Timer 0, and T1 for Timer 1. The T0 and T1 inputs are sampled in every machine cycle at C4. If the sampled value is high in one machine cycle and low in the next, then a valid high to low transition on the pin is recognized and the count register is incremented. Since it takes two machine cycles to recognize a negative transition on the pin, the maximum rate at which counting will take place is 1/24 of the master clock frequency. In either the "Timer" or "Counter" mode, the count register will be updated at C3. Therefore, in the "Timer" mode, the recognized negative transition on pin T0 and T1 can cause the count register value to be updated only in the machine cycle following the one in which the negative edge was detected.

The "Timer" or "Counter" function is selected by the "$C/\overline{T}$" bit in the TMOD Special Function Register. Each Timer/Counter has one selection bit for its own; bit 2 of TMOD selects the function for Timer/Counter 0 and bit 6 of TMOD selects the function for Timer/Counter 1. In addition each Timer/Counter can be set to operate in any one of four possible modes. The mode selection is done by bits M0 and M1 in the TMOD SFR.

14.2 Time-Base Selection

W78I054D/W78I052D/W78I051D provides users with two modes of operation for the timer. The timers can be programmed to operate like the standard 8051 family, counting at the rate of 1/12 of the clock speed. This will ensure that timing loops on W78I054D/W78I052D/W78I051D and the standard 8051 can be matched. This is the default mode of operation of the W78I054D/W78I052D/W78I051D timers.

14.2.1 Mode 0

In Mode 0, the timer/counter is a 13-bit counter. The 13-bit counter consists of THx (8 MSB) and the five lower bits of TLx (5 LSB). The upper three bits of TLx are ignored. The timer/counter is enabled when TRx is set and either GATE is 0 or $\overline{INTx}$ is 1. When $C/\overline{T}$ is 0, the timer/counter counts clock cycles; when $C/\overline{T}$ is 1, it counts falling edges on T0 (Timer 0) or T1 (Timer 1). For clock cycles, the time base be 1/12 speed, and the falling edge of the clock increments the counter. When the 13-bit value moves from 1FFFh to 0000h, the timer overflow flag TFx is set, and an interrupt occurs if enabled.

14.2.2 Mode 1

Mode 1 is similar to Mode 0 except that the counting register forms a 16-bit counter, rather than a 13-bit counter. This means that all the bits of THx and TLx are used. Roll-over occurs when the timer moves from a count of 0FFFFh to 0000h. The timer overflow flag TFx of the relevant timer is set and if

enabled an interrupt will occur. The selection of the time-base in the timer mode is similar to that in Mode 0. The gate function operates similarly to that in Mode 0.

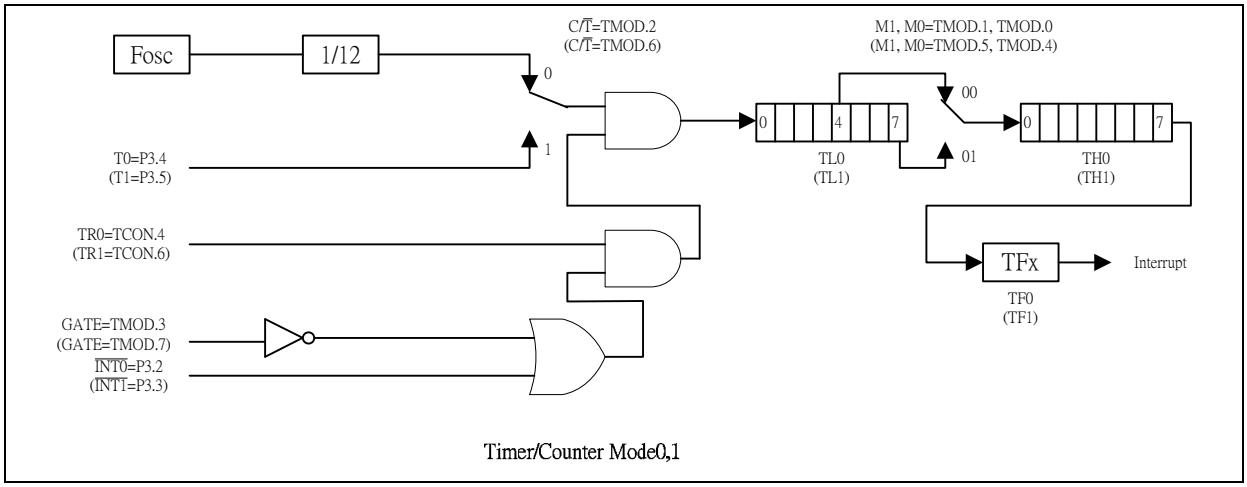

Figure 14- 1 Timer/Counters 0 & 1 in Mode 0,1

14.2.3 Mode 2

In Mode 2, the timer/counter is in the Auto Reload Mode. In this mode, TLx acts as an 8-bit count register, while THx holds the reload value. When the TLx register overflows from FFh to 00h, the TFx bit in TCON is set and TLx is reloaded with the contents of THx, and the counting process continues from here. The reload operation leaves the contents of the THx register unchanged. Counting is enabled by the TRx bit and proper setting of GATE and $\overline{INTx}$ pins. As in the other two modes 0 and 1 mode 2 allows counting of clock/12 or pulses on pin Tn.

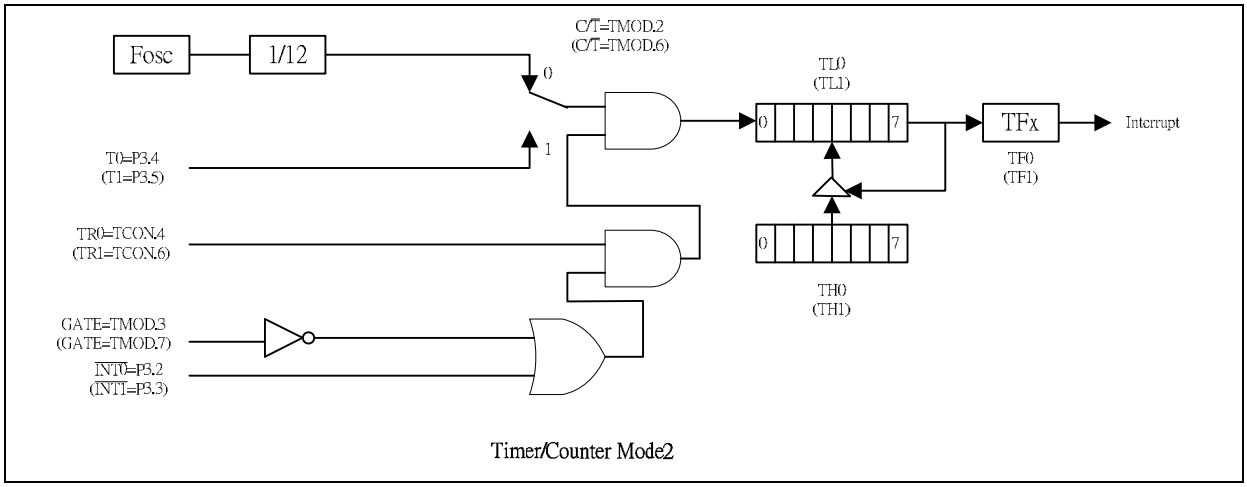

Figure 14- 2 Timer/Counter 0 & 1 in Mode 2

14.2.4 Mode 3

Mode 3 has different operating methods for the two timer/counters. For timer/counter 1, mode 3 simply freezes the counter. Timer/Counter 0, however, configures TL0 and TH0 as two separate 8 bit count registers in this mode. The logic for this mode is shown in the figure. TL0 uses the Timer/Counter 0

control bits $C/\overline{T}$, GATE, TR0, $\overline{INT0}$ and TF0. The TL0 can be used to count clock cycles (clock/12) or 1-to-0 transitions on pin T0 as determined by C/T (TMOD.2). TH0 is forced as a clock cycle counter (clock/12) and takes over the use of TR1 and TF1 from Timer/Counter 1. Mode 3 is used in cases where an extra 8 bit timer is needed. With Timer 0 in Mode 3, Timer 1 can still be used in Modes 0, 1 and 2, but its flexibility is somewhat limited. While its basic functionality is maintained, it no longer has control over its overflow flag TF1 and the enable bit TR1. Timer 1 can still be used as a timer/counter and retains the use of GATE and INT1 pin. In this condition it can be turned on and off by switching it out of and into its own Mode 3. It can also be used as a baud rate generator for the serial port.

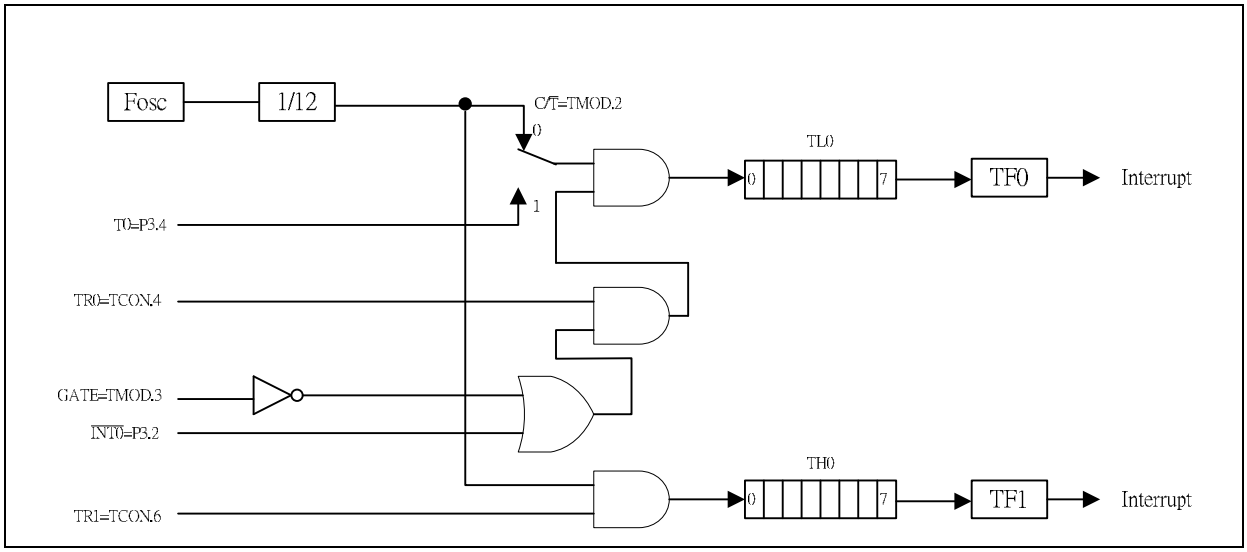

Figure 14- 3 Timer/Counter Mode 3

14.3 Timer/Counter 2

Timer/Counter 2 is a 16 bit up/down counter which is configured by the T2MOD(bit 0) register and controlled by the T2CON register. Timer/Counter 2 is equipped with a capture/reload capability. As with the Timer 0 and Timer 1 counters, there exists considerable flexibility in selecting and controlling the clock, and in defining the operating mode. The clock source for Timer/Counter 2 may be selected for either the external T2 pin (C/T2 = 1) or the crystal oscillator, which is divided by 12 (C/T2 = 0). The clock is then enabled when TR2 is a 1, and disabled when TR2 is a 0.

14.3.1 Capture Mode

The capture mode is enabled by setting the $CP/\overline{RL2}$ bit in the T2CON register to a 1. In the capture mode, Timer/Counter 2 serves as a 16 bit up counter. When the counter rolls over from 0FFFFh to 0000h, the TF2 bit is set, which will generate an interrupt request. If the EXEN2 bit is set, then a negative transition of T2EX pin will cause the value in the TL2 and TH2 register to be captured by the RCAP2L and RCAP2H registers. This action also causes the EXF2 bit in T2CON to be set, which will also generate an interrupt.

(RCLK,TCLK, $CP/\overline{RL2}$)= (0,0,1)

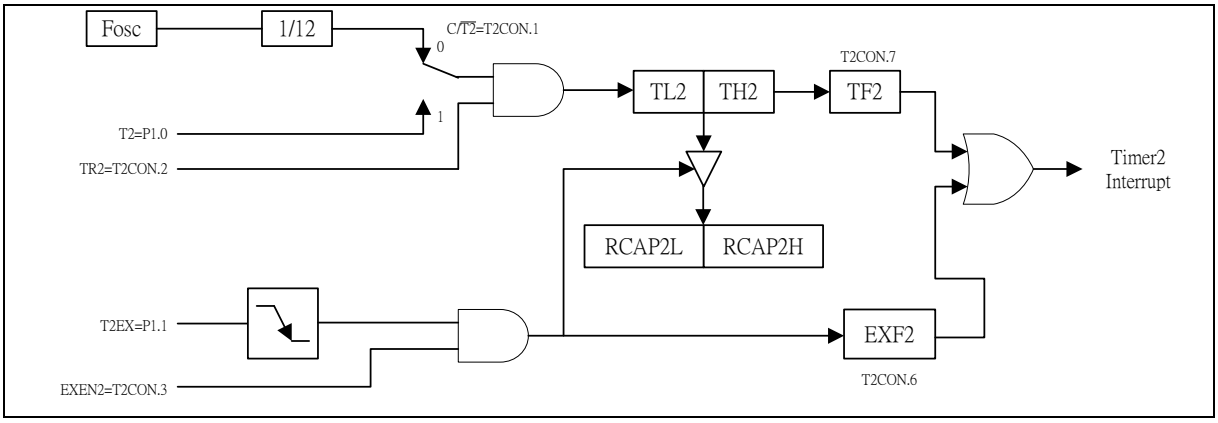

Figure 14- 4 16-Bit Capture Mode

14.3.2 Auto-Reload Mode, Counting up

The auto-reload mode as an up counter is enabled by clearing the CP / $\overline{RL2}$ bit in the T2CON register and clearing the DCEN bit in T2MOD(bit0) register. In this mode, Timer/Counter 2 is a 16 bit up counter. When the counter rolls over from 0FFFFh, a reload is generated that causes the contents of the RCAP2L and RCAP2H registers to be reloaded into the TL2 and TH2 registers. The reload action also sets the TF2 bit. If the EXEN2 bit is set, then a negative transition of T2EX pin will also cause a reload. This action also sets the EXF2 bit in T2CON.

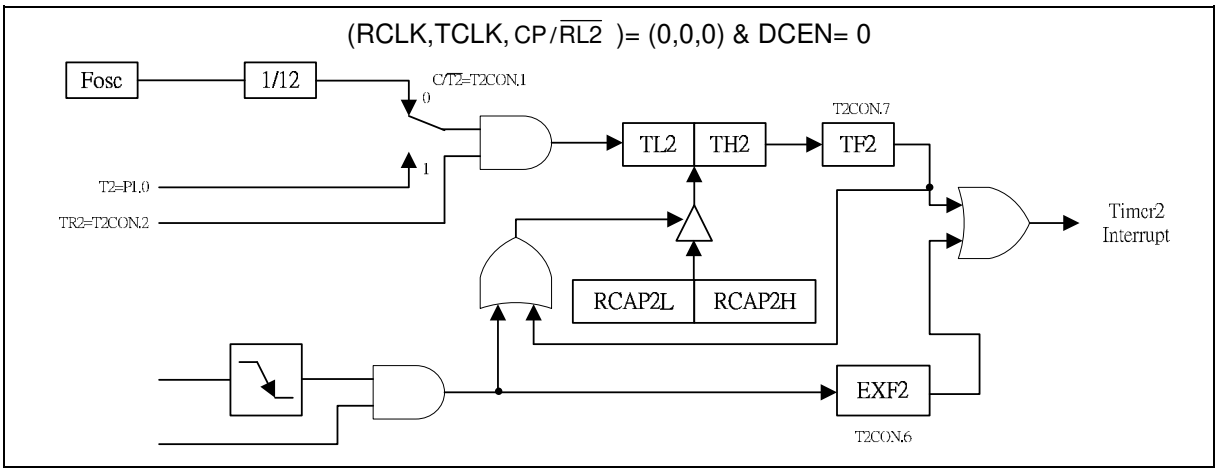

Figure 14- 5 16-Bit Auto-reload Mode, Counting Up

14.3.3 Auto-reload Mode, Counting Up/Down

Timer/Counter 2 will be in auto-reload mode as an up/down counter if CP / $\overline{RL2}$ bit in T2CON is cleared and the DCEN bit in T2MOD is set. In this mode, Timer/Counter 2 is an up/down counter whose direction is controlled by the T2EX pin. A 1 on this pin cause the counter to count up. An overflow while counting up will cause the counter to be reloaded with the contents of the capture registers. The next down count following the case where the contents of Timer/Counter equal the capture registers will load a 0FFFFh into Timer/Counter 2. In either event a reload will set the TF2 bit. A reload will also toggle the EXF2 bit. However, the EXF2 bit can not generate an interrupt while in this mode.

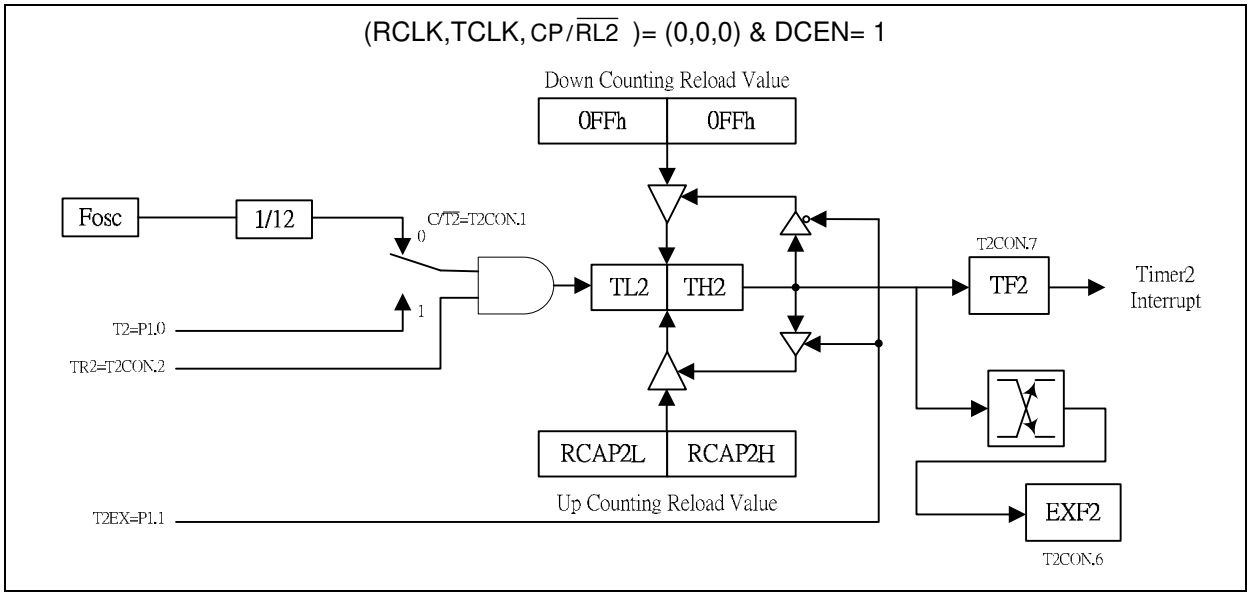

Figure 14- 6 16-Bit Auto-reload Mode, Counting Up

14.3.4 Baud Rate Generator Mode

The baud rate generator mode is enabled by setting either the RCLK or TCLK bits in T2CON register. While in the baud rate generator mode, Timer/Counter 2 is a 16 bit counter with auto reload when the count rolls over from 0FFFFh. However, rolling over does not set the TF2 bit. If EXEN2 bit is set, then a negative transition of the T2EX pin will set EXF2 bit in the T2CON register and cause an interrupt request.

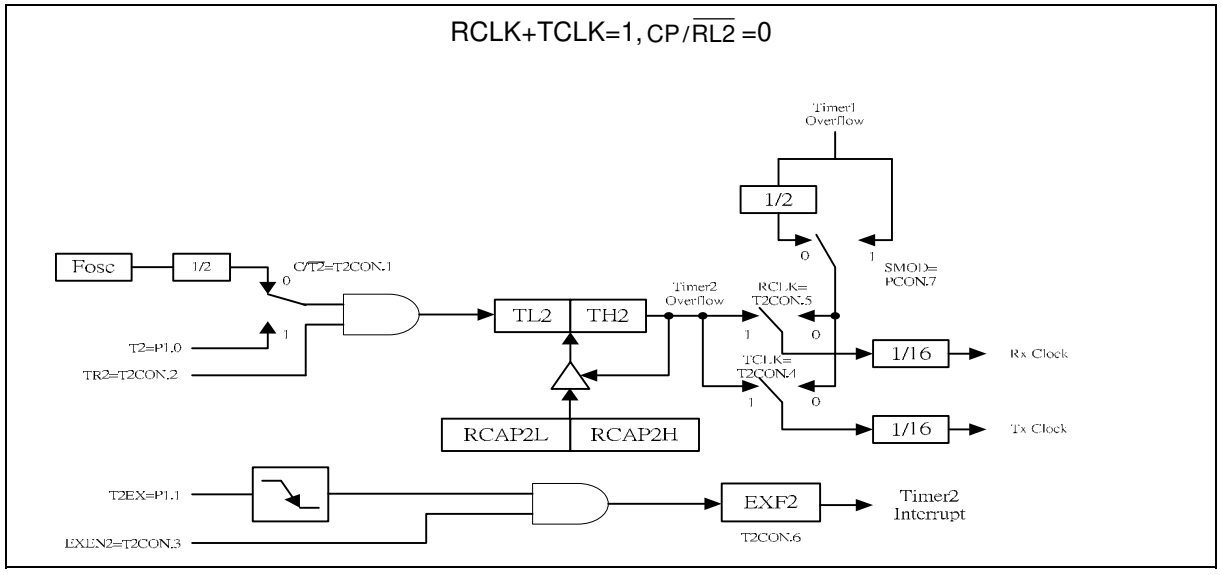

Figure 14- 7 Baud Rate Generator Mode

15 WATCHDOG TIMER

The Watchdog timer is a free-running timer which can be programmed by the user to serve as a system monitor, a time-base generator or an event timer. It is basically a set of dividers that divide the system clock. The divider output is selectable and determines the time-out interval. When the time-out occurs a system reset can also be caused if it is enabled. The main use of the Watchdog timer is as a system monitor. This is important in real-time control applications. In case of power glitches or electromagnetic interference, the processor may begin to execute errant code. If this is left unchecked the entire system may crash. The watchdog time-out selection will result in different time-out values depending on the clock speed. The Watchdog timer will de disabled on reset. In general, software should restart the Watchdog timer to put it into a known state. The control bits that support the Watchdog timer are discussed below.

ENW : Enable watchdog if set.

CLRW : Clear watchdog timer and Pre-scalar if set. This flag will be cleared automatically

WIDL : If this bit is set, watch-dog is enabled under IDLE mode. If cleared, watchdog is disabled under IDLE mode. Default is cleared.

PS2, PS1, PS0: Watchdog Pre-scalar timer select. Pre-scalar is selected when set PS2–0 as follows:

PS2	PS1	PS0	Pre-scalar select
0	0	0	2
0	0	1	8
0	1	0	4
0	1	1	16
1	0	0	32
1	0	1	64
1	1	0	128
1	1	1	256

The time-out period is obtained using the following equation for 12T per machine cycle:

$$\frac{1}{OSC} \times 2^{14} \times \Pr e - scalar \times 1000 \times 12ms$$

Before Watchdog time-out occurs, the program must clear the 14-bit timer by writing 1 to WDTC.6 (CLRW). After 1 is written to this bit, the 14-bit timer, Pre-scalar and this bit will be reset on the next instruction cycle. The Watchdog timer is cleared on reset.

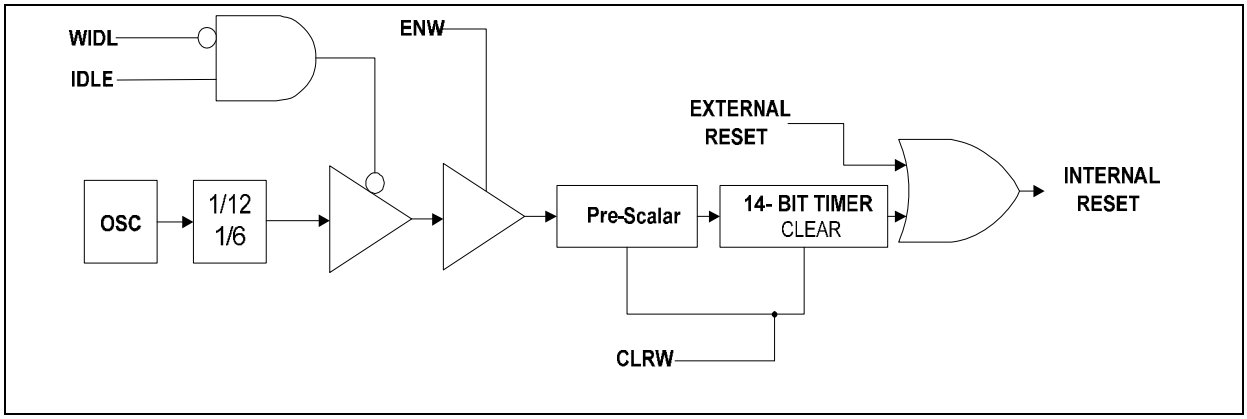

Figure 15- 1 Watchdog Timer Block Diagram

Typical Watch-Dog time-out period when OSC = 20 MHz

PS2 PS1 PS0	Watchdog time-out period (for 12T per machine cycle)
0 0 0	19.66 mS
0 1 0	78.64 mS
0 0 1	39.32 mS
0 1 1	157.28 mS
1 0 0	314.57 mS
1 0 1	629.14 mS
1 1 0	1.25 S
1 1 1	2.50 S

Table 15- 1 Watch-Dog time-out period for 12T per machine cycle, 20MHz

PS2 PS1 PS0	Watchdog time-out period (for 6T per machine cycle)
0 0 0	9.83 mS
0 1 0	39.32 mS
0 0 1	19.66 mS
0 1 1	78.64 mS
1 0 0	157.28 mS
1 0 1	314.57mS
1 1 0	629.14 mS
1 1 1	1.250 S

Table 15- 2 Watch-Dog time-out period for 6T per machine cycle, 20MHz

16 SERIAL PORT

Serial port in this device is a full duplex port. The serial port is capable of synchronous as well as asynchronous communication. In Synchronous mode the device generates the clock and operates in a half duplex mode. In the asynchronous mode, full duplex operation is available. This means that it can simultaneously transmit and receive data. The transmit register and the receive buffer are both addressed as SBUF Special Function Register. However any write to SBUF will be to the transmit register, while a read from SBUF will be from the receiver buffer register. The serial port can operate in four different modes as described below.

16.1 MODE 0

This mode provides synchronous communication with external devices. In this mode serial data is transmitted and received on the RXD line. TXD is used to transmit the shift clock. The TxD clock is provided by the device whether it is transmitting or receiving. This mode is therefore a half duplex mode of serial communication. In this mode, 8 bits are transmitted or received per frame. The LSB is transmitted/received first. The baud rate is fixed at 1/12 of the oscillator frequency. This Baud Rate is determined by the SM2 bit (SCON.5). When this bit is set to 0, then the serial port runs at 1/12 of the clock. This additional facility of programmable baud rate in mode 0 is the only difference between the standard 8051 and W78I054D/W78I052D/W78I051D.

The functional block diagram is shown below. Data enters and leaves the Serial port on the RxD line. The TxD line is used to output the shift clock. The shift clock is used to shift data into and out of this device and the device at the other end of the line. Any instruction that causes a write to SBUF will start the transmission. The shift clock will be activated and data will be shifted out on the RxD pin till all 8 bits are transmitted. If SM2 = 1, then the data on RxD will appear 1 clock period before the falling edge of shift clock on TxD. The clock on TxD then remains low for 2 clock periods, and then goes high again. If SM2 = 0, the data on RxD will appear 3 clock periods before the falling edge of shift clock on TxD. The clock on TxD then remains low for 6 clock periods, and then goes high again. This ensures that at the receiving end the data on RxD line can either be clocked on the rising edge of the shift clock on TxD or latched when the TxD clock is low.

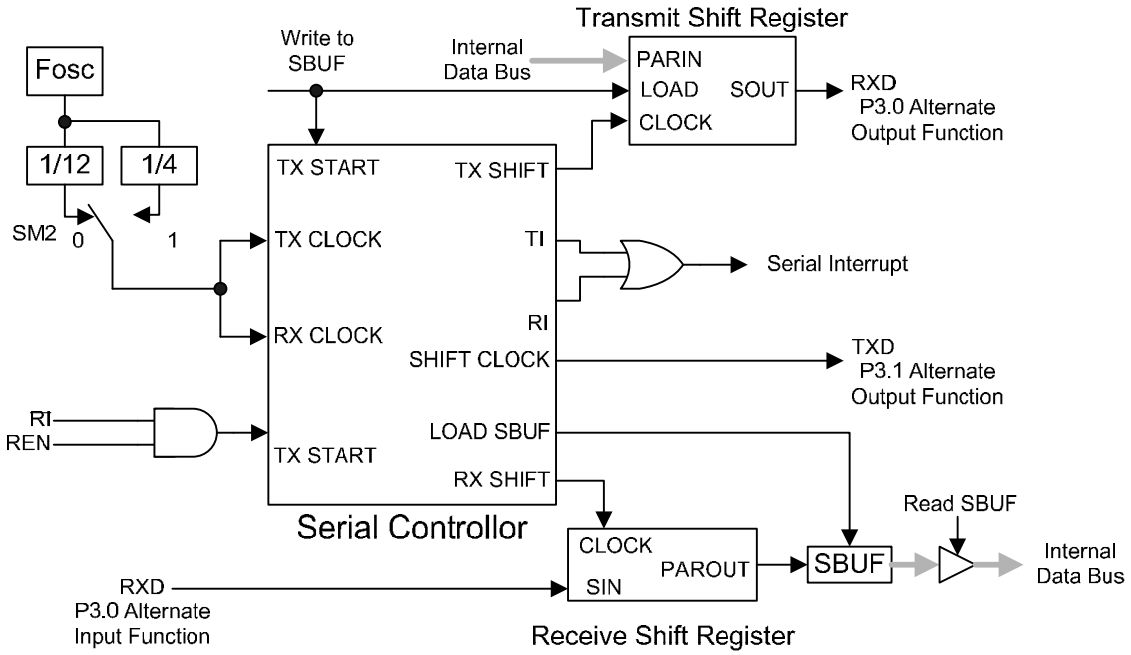

Figure 16- 1 Serial port mode 0

The TI flag is set high in S6P2 following the end of transmission of the last bit. The serial port will receive data when REN is 1 and RI is zero. The shift clock (TxD) will be activated and the serial port will latch data on the rising edge of shift clock. The external device should therefore present data on the falling edge on the shift clock. This process continues till all the 8 bits have been received. The RI flag is set in S6P2 following the last rising edge of the shift clock on TxD. This will stop reception, till the RI is cleared by software.

16.2 MODE 1

In Mode 1, the full duplex asynchronous mode is used. Serial communication frames are made up of 10 bits transmitted on TXD and received on RXD. The 10 bits consist of a start bit (0), 8 data bits (LSB first), and a stop bit (1). On receive, the stop bit goes into RB8 in the SFR SCON. The baud rate in this mode is variable. The serial baud can be programmed to be 1/16 or 1/32 of the Timer 1 overflow. Since the Timer 1 can be set to different reload values, a wide variation in baud rates is possible.

Transmission begins with a write to SBUF. The serial data is brought out on to TxD pin at S6P2 following the first roll-over of divide by 16 counter. The next bit is placed on TxD pin at S6P2 following the next rollover of the divide by 16 counter. Thus the transmission is synchronized to the divide by 16 counter and not directly to the write to SBUF signal. After all 8 bits of data are transmitted, the stop bit is transmitted. The TI flag is set in the S6P2 state after the stop bit has been put out on TxD pin. This will be at the 10th rollover of the divide by 16 counters after a write to SBUF.

Reception is enabled only if REN is high. The serial port actually starts the receiving of serial data, with the detection of a falling edge on the RxD pin. The 1-to-0 detector continuously monitors the RxD line, sampling it at the rate of 16 times the selected baud rate. When a falling edge is detected, the divide by 16 counters is immediately reset. This helps to align the bit boundaries with the rollovers of the divide by 16 counters.

The 16 states of the counter effectively divide the bit time into 16 slices. The bit detection is done on a best of three basis. The bit detector samples the RxD pin, at the 8th, 9th and 10th counter states. By using a majority 2 of 3 voting system, the bit value is selected. This is done to improve the noise rejection feature of the serial port. If the first bit detected after the falling edge of RxD pin is not 0, then this indicates an invalid start bit, and the reception is immediately aborted. The serial port again looks for a falling edge in the RxD line. If a valid start bit is detected, then the rest of the bits are also detected and shifted into the SBUF.

After shifting in 8 data bits, there is one more shift to do, after which the SBUF and RB8 are loaded and RI is set. However certain conditions must be met before the loading and setting of RI can be done.

1. RI must be 0 and
2. Either SM2 = 0, or the received stop bit = 1.

If these conditions are met, then the stop bit goes to RB8, the 8 data bits go into SBUF and RI is set. Otherwise the received frame may be lost. After the middle of the stop bit, the receiver goes back to looking for a 1-to-0 transition on the RxD pin.

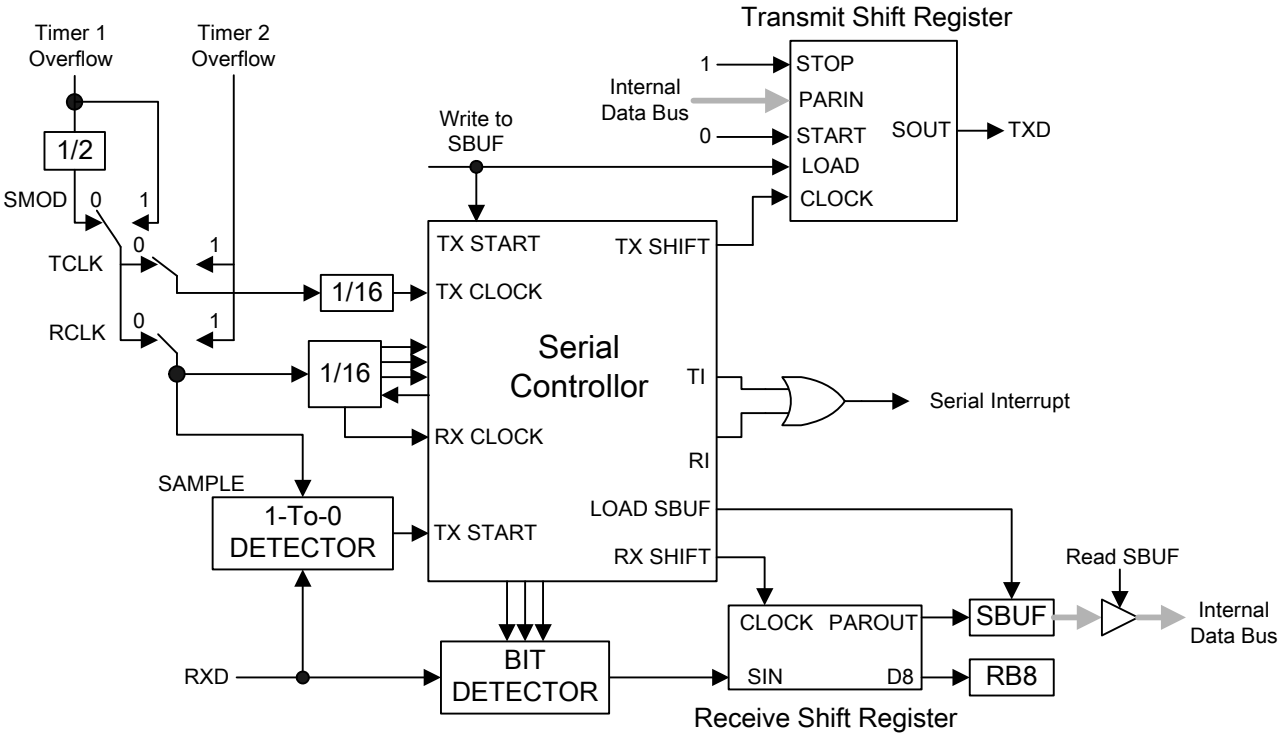

Figure 16- 2 Serial port mode 1

16.3 MODE 2

This mode uses a total of 11 bits in asynchronous full-duplex communication. The functional description is shown in the figure below. The frame consists of one start bit (0), 8 data bits (LSB first), a programmable 9th bit (TB8) and a stop bit (1). The 9th bit received is put into RB8. The baud rate is pro-

grammable to 1/32 or 1/64 of the oscillator frequency, which is determined by the SMOD bit in PCON SFR. Transmission begins with a write to SBUF. The serial data is brought out on to TxD pin at S6P2 following the first roll-over of the divide by 16 counter. The next bit is placed on TxD pin at S6P2 following the next rollover of the divide by 16 counter. Thus the transmission is synchronized to the divide by 16 counters, and not directly to the write to SBUF signal. After all 9 bits of data are transmitted, the stop bit is transmitted. The TI flag is set in the S6P2 state after the stop bit has been put out on TxD pin. This will be at the 11th rollover of the divide by 16 counters after a write to SBUF. Reception is enabled only if REN is high. The serial port actually starts the receiving of serial data, with the detection of a falling edge on the RxD pin. The 1-to-0 detector continuously monitors the RxD line, sampling it at the rate of 16 times the selected baud rate. When a falling edge is detected, the divide by 16 counters is immediately reset. This helps to align the bit boundaries with the rollovers of the divide by 16 counters. The 16 states of the counter effectively divide the bit time into 16 slices. The bit detection is done on a best of three basis. The bit detector samples the RxD pin, at the 8th, 9th and 10th counter states. By using a majority 2 of 3 voting system, the bit value is selected. This is done to improve the noise rejection feature of the serial port.

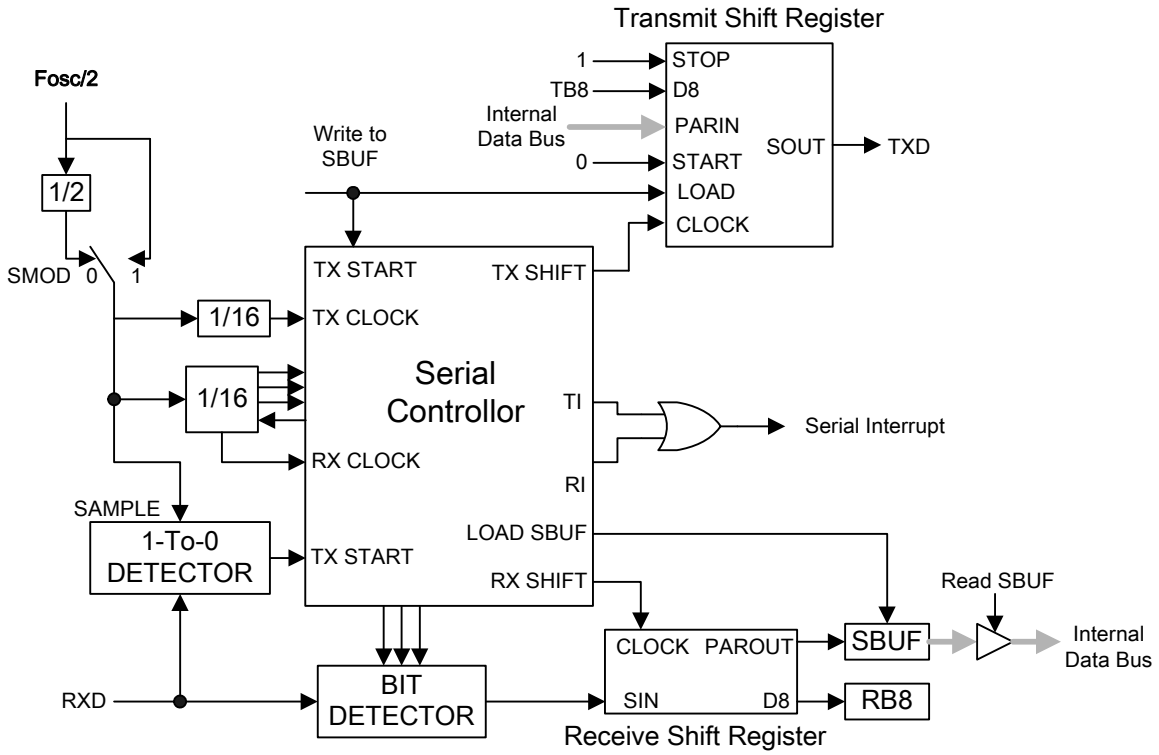

Figure 16- 3 Serial port mode 2

If the first bit detected after the falling edge of RxD pin, is not 0, then this indicates an invalid start bit, and the reception is immediately aborted. The serial port again looks for a falling edge in the RxD line. If a valid start bit is detected, then the rest of the bits are also detected and shifted into the SBUF. After shifting in 9 data bits, there is one more shift to do, after which the SBUF and RB8 are loaded and RI is set. However certain conditions must be met before the loading and setting of RI can be done.

1. RI must be 0 and
2. Either SM2 = 0, or the received stop bit = 1.

If these conditions are met, then the stop bit goes to RB8, the 8 data bits go into SBUF and RI is set. Otherwise the received frame may be lost. After the middle of the stop bit, the receiver goes back to looking for a 1-to-0 transition on the RxD pin.

MODE 3

This mode is similar to Mode 2 in all respects, except that the baud rate is programmable. The user must first initialize the Serial related SFR SCON before any communication can take place. This involves selection of the Mode and baud rate. The Timer 1 should also be initialized if modes 1 and 3 are used. In all four modes, transmission is started by any instruction that uses SBUF as a destination register. Reception is initiated in Mode 0 by the condition RI = 0 and REN = 1. This will generate a clock on the TxD pin and shift in 8 bits on the RxD pin. Reception is initiated in the other modes by the incoming start bit if REN = 1. The external device will start the communication by transmitting the start bit.

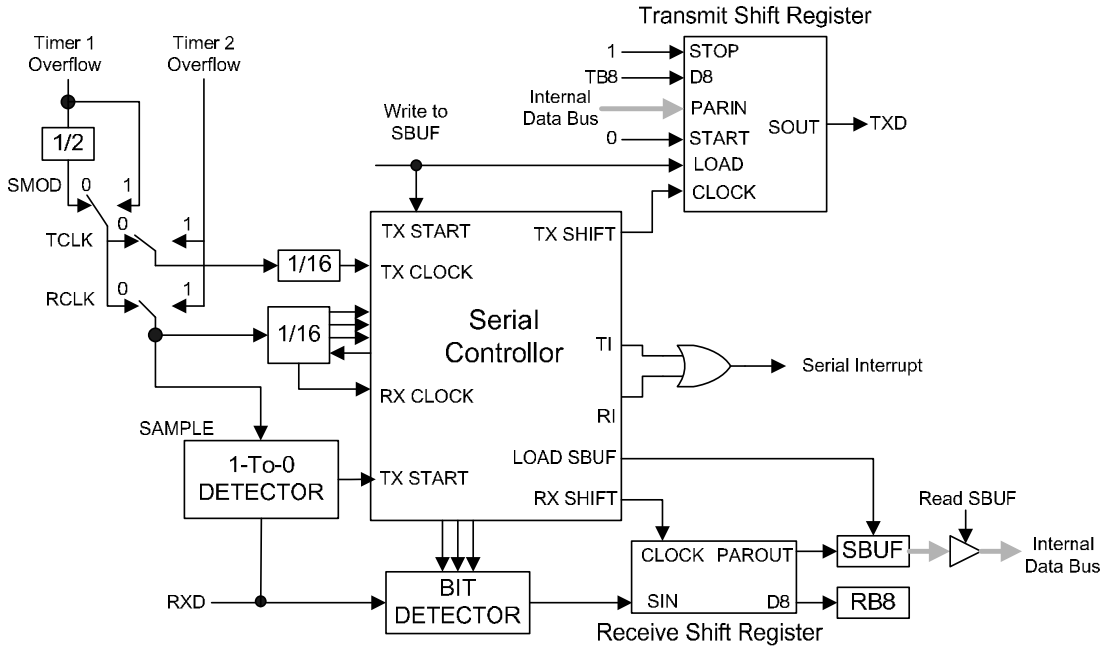

Figure 16- 4 Serial port mode 3

SM0	SM1	Mode	Type	Baud Clock	Frame Size	Start Bit	Stop Bit	9th bit Function
0	0	0	Synch.	4 or 12 TCLKS	8 bits	No	No	None
0	1	1	Asynch.	Timer 1 or 2	10 bits	1	1	None
1	0	2	Asynch.	32 or 64 TCLKS	11 bits	1	1	0, 1
1	1	3	Asynch.	Timer 1 or 2	11 bits	1	1	0, 1

Table 17- 1 Serial Ports Modes

17 FLASH ROM CODE BOOT MODE SELECTION

The W78I054D/W78I052D/W78I051D boots from APROM program (16K/8K/4K bytes) or LDROM program (2K bytes) at power on reset or external reset.

BOOT MODE Select by CONFIG bits

CBS (CONFIG.2)	Config boot select at Power-on reset and external reset. 1: Boot from APROM (0x0000). 0: Boot from LDROM (0x3800).

18 ISP(IN-SYSTEM PROGRAMMING)

ISP is the ability of program MCU to be programmed while F/W code in AP-ROM or LD-ROM. (Note: Timer 0 for program, erase, read on ISP mode. ISP operation voltage 3.3- 5.5V)

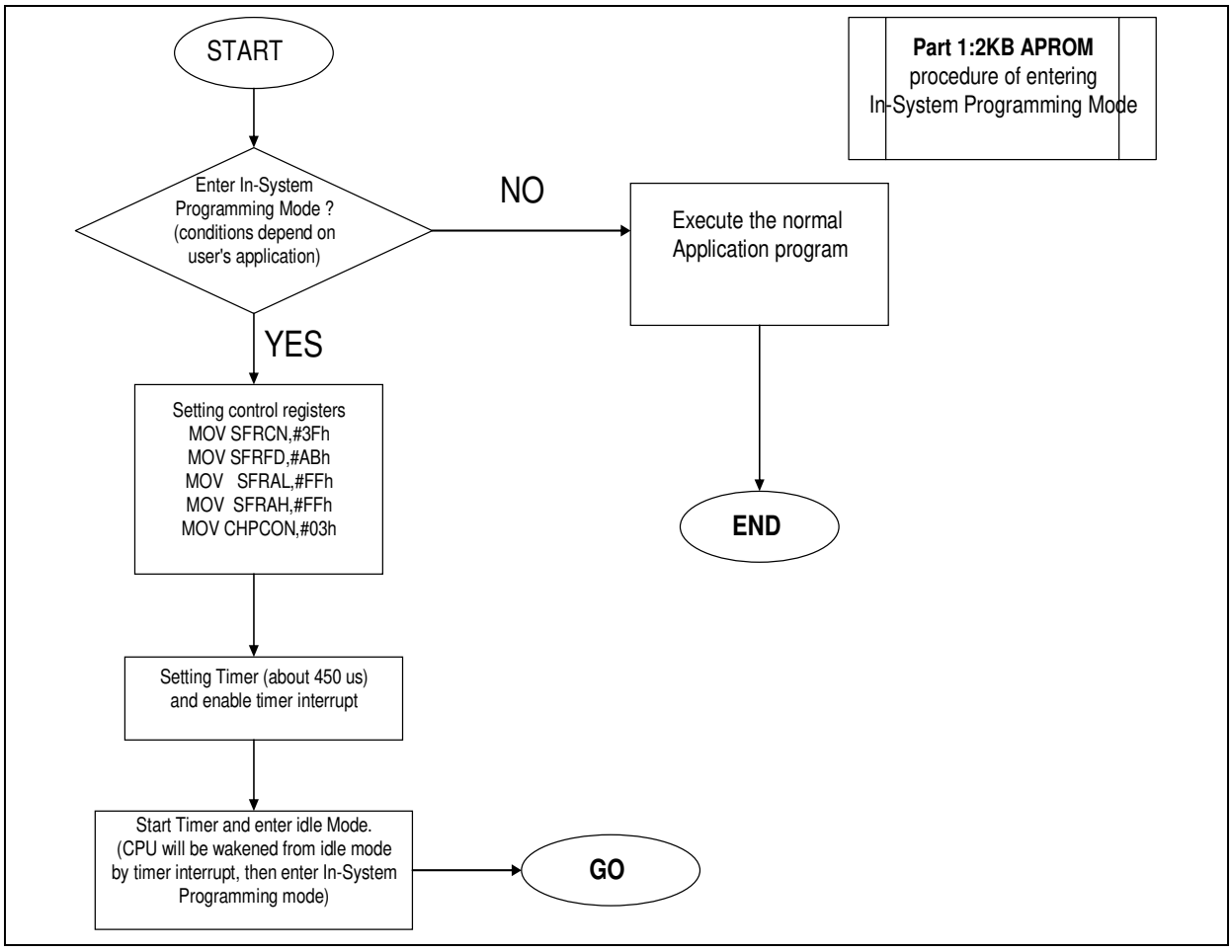

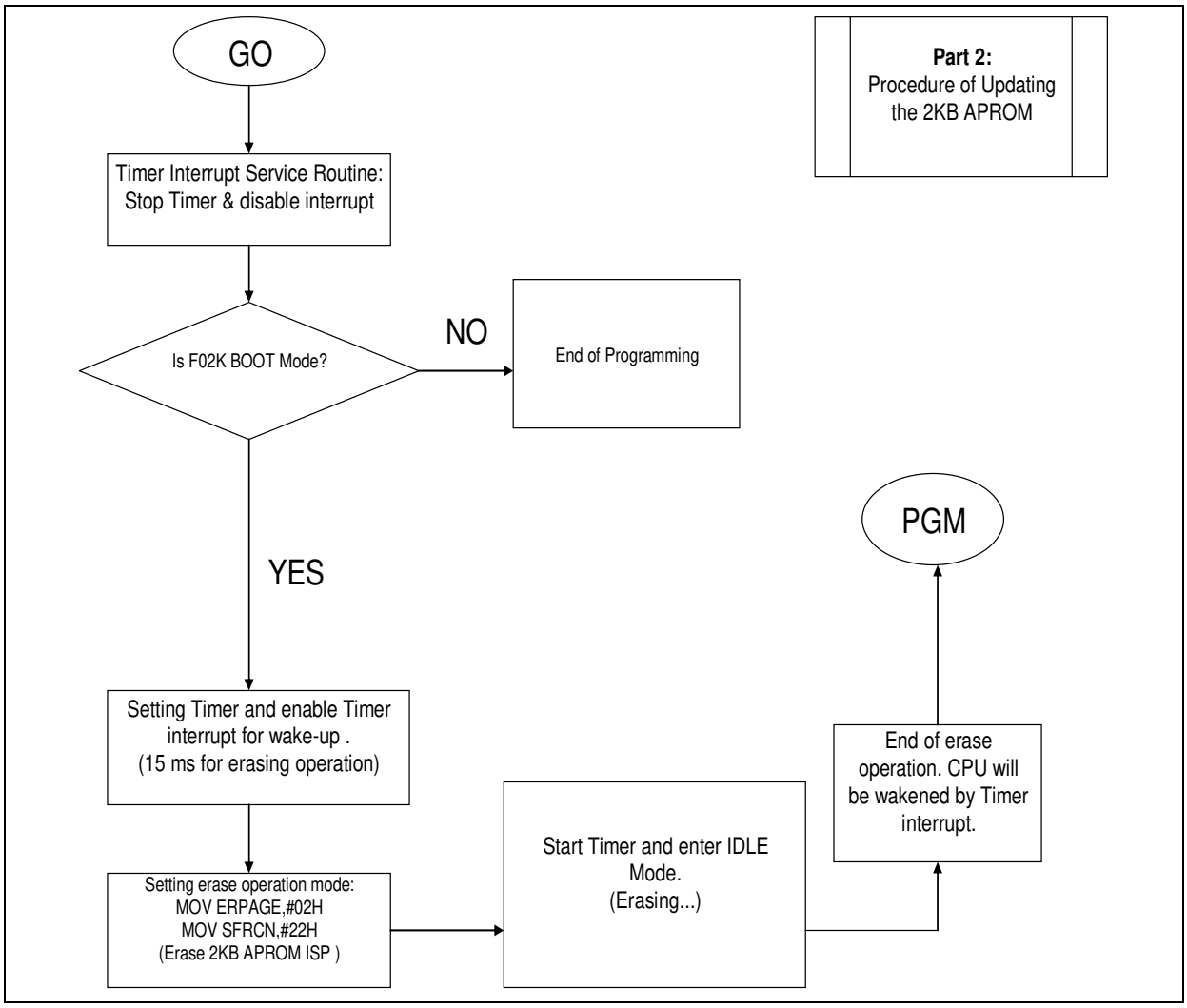
GO
Part 2:
Procedure of Updating the 2KB APROM
Timer Interrupt Service Routine:
Stop Timer & disable interrupt
Is F02K BOOT Mode?
NO
End of Programming
YES
PGM
Setting Timer and enable Timer interrupt for wake-up .
(15 ms for erasing operation)
Setting erase operation mode:
MOV ERPAGE,#02H
MOV SFRCN,#22H
(Erase 2KB APROM ISP)
Start Timer and enter IDLE Mode.
(Erasing...)
End of erase operation. CPU will be wakened by Timer interrupt.

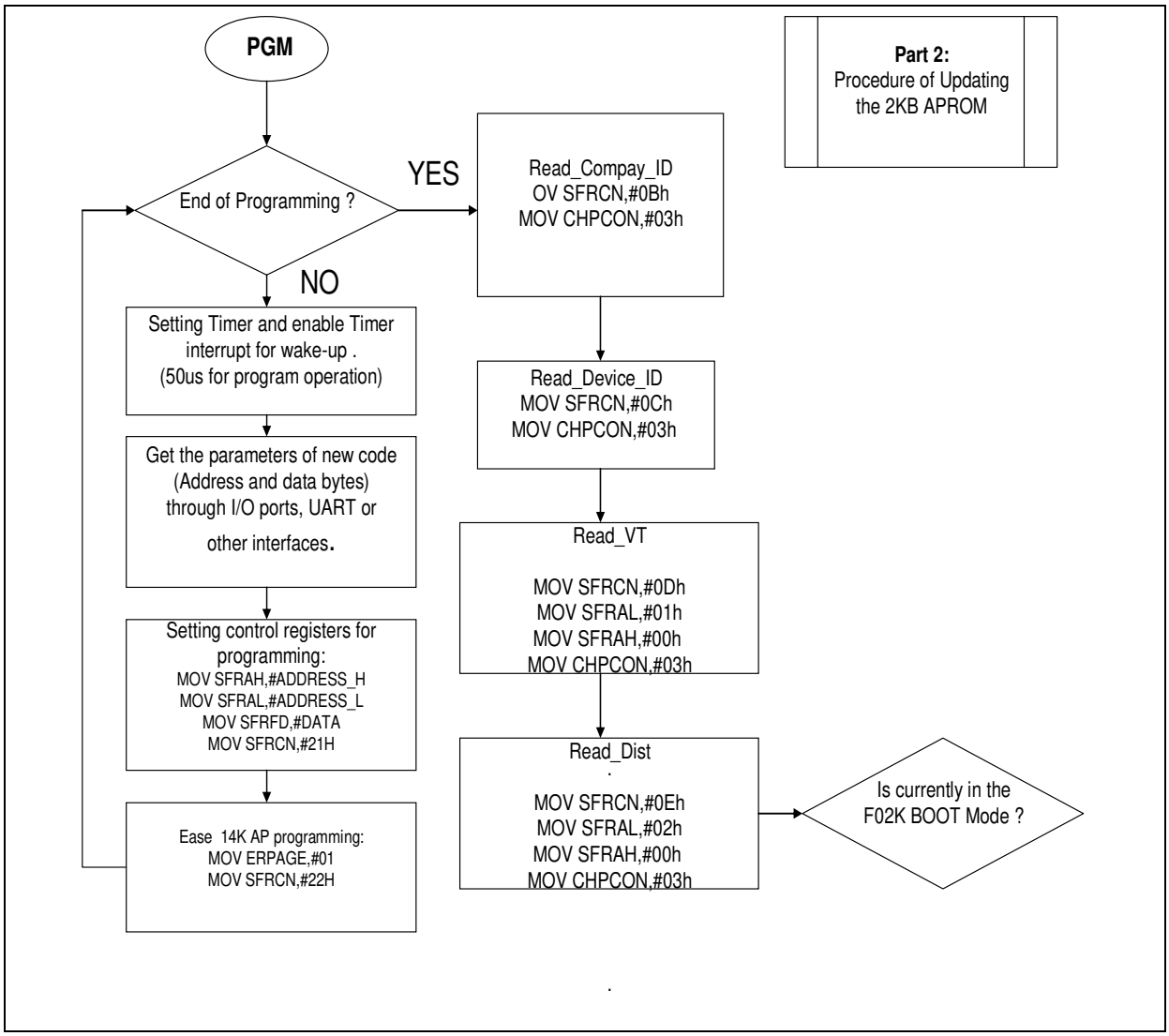
PGM
End of Programming ?
YES
NO
Setting Timer and enable Timer interrupt for wake-up . (50us for program operation)
Get the parameters of new code (Address and data bytes) through I/O ports, UART or other interfaces.
Setting control registers for programming:
MOV SFRAH,#ADDRESS_H
MOV SFRAL,#ADDRESS_L
MOV SFRFD,#DATA
MOV SFRCN,#21H
Ease 14K AP programming:
MOV ERPAGE,#01
MOV SFRCN,#22H
Read_Compay_ID
OV SFRCN,#0Bh
MOV CHPCON,#03h
Read_Device_ID
MOV SFRCN,#0Ch
MOV CHPCON,#03h
Read_VT
MOV SFRCN,#0Dh
MOV SFRAL,#01h
MOV SFRAH,#00h
MOV CHPCON,#03h
Read_Dist
MOV SFRCN,#0Eh
MOV SFRAL,#02h
MOV SFRAH,#00h
MOV CHPCON,#03h
Is currently in the F02K BOOT Mode ?
Part 2:
Procedure of Updating the 2KB APROM

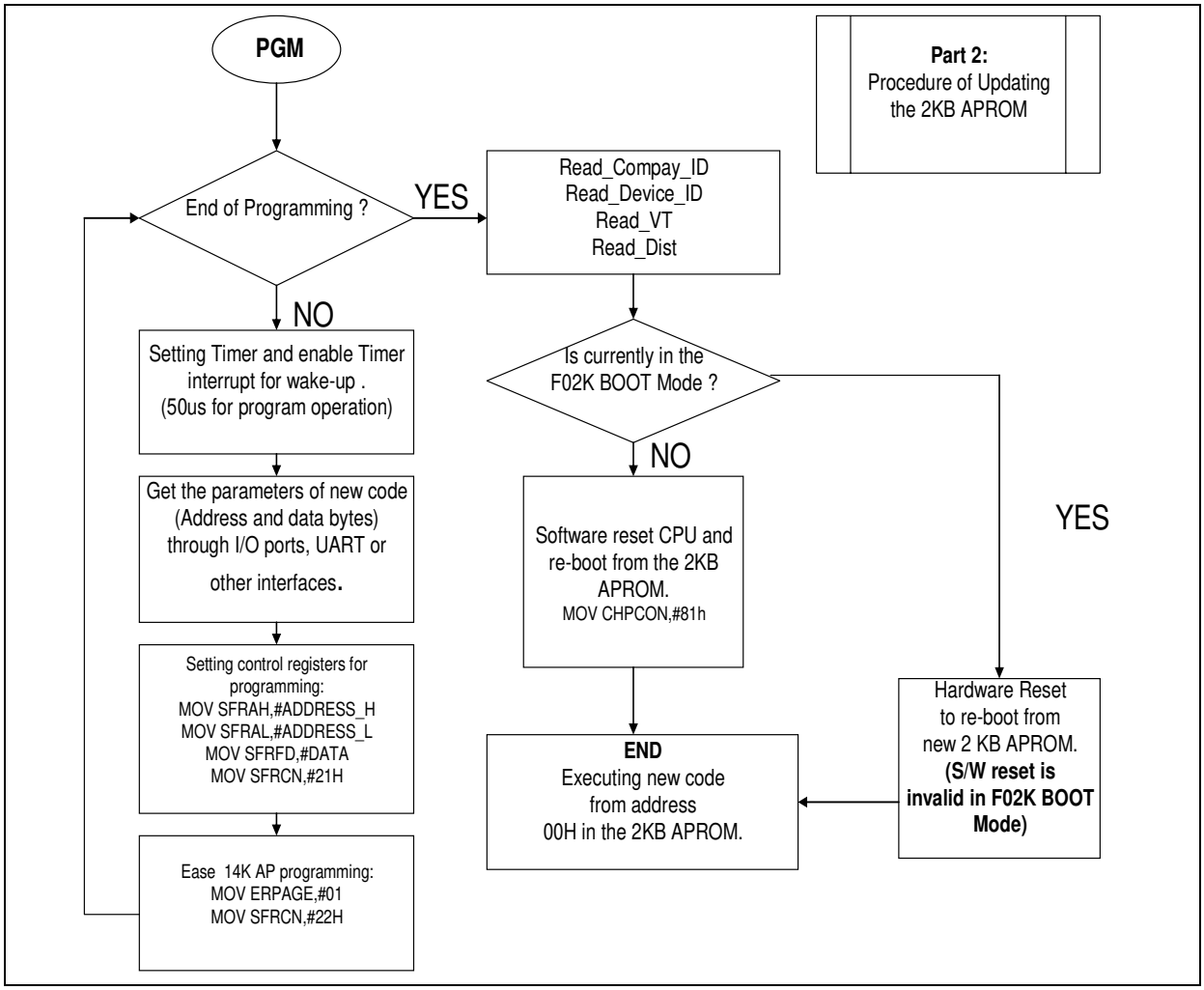
PGM
End of Programming ?
YES
NO
Read_Compay_ID
Read_Device_ID
Read_VT
Read_Dist
Part 2:
Procedure of Updating
the 2KB APROM
Is currently in the
F02K BOOT Mode ?
NO
YES
Setting Timer and enable Timer
interrupt for wake-up .
(50us for program operation)
Get the parameters of new code
(Address and data bytes)
through I/O ports, UART or
other interfaces.
Setting control registers for
programming:
MOV SFRAH,#ADDRESS_H
MOV SFRAL,#ADDRESS_L
MOV SFRFD,#DATA
MOV SFRCN,#21H
Ease 14K AP programming:
MOV ERPAGE,#01
MOV SFRCN,#22H
Software reset CPU and
re-boot from the 2KB
APROM.
MOV CHPCON,#81h
END
Executing new code
from address
00H in the 2KB APROM.
Hardware Reset
to re-boot from
new 2 KB APROM.
(S/W reset is
invalid in F02K BOOT
Mode)

19 CONFIG BITS

During the on-chip Flash EPROM operation mode, the Flash EPROM can be programmed and verified repeatedly. Until the code inside the Flash EPROM is confirmed OK, the code can be protected. The protection of Flash EPROM and those operations on it are described below.

The W78I054D/W78I052D/W78I051D has a Special Setting Register, the config Bits, which can not be accessed in normal mode. The Security register can only be accessed from the Flash EPROM operation mode. Those bits of the Security Registers can not be changed once they have been programmed from high to low. They can only be reset through erase-all operation. The Security Register is addressed in the Flash EPROM operation mode by address #0FFFFh.

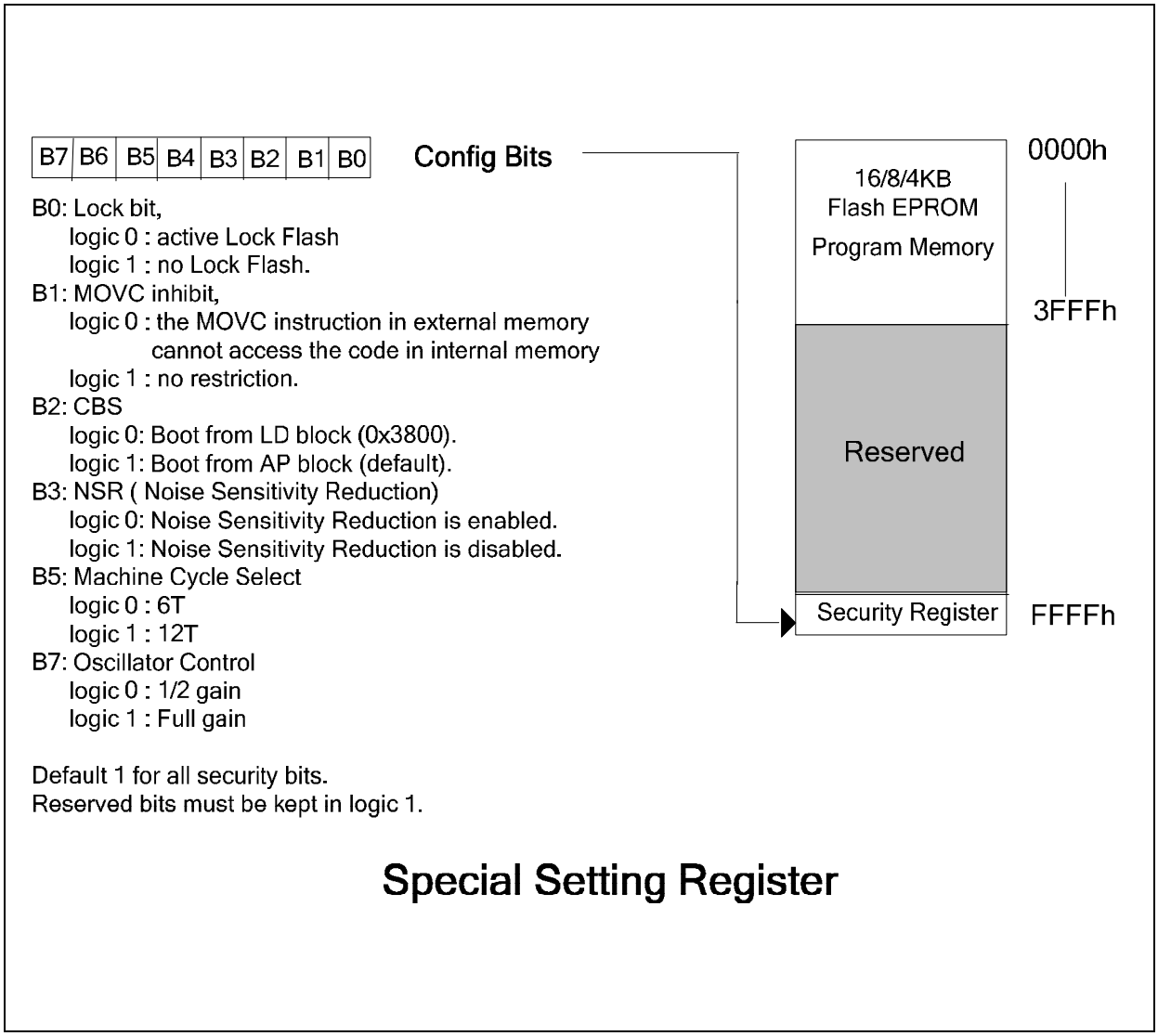

Bit 0: Lock bits
0: Lock enable
1: Lock disable
This bit is used to protect the customer's program code in the W78I054D/W78I052D/W78I051D. It may be set after the programmer finishes the programming and verifies sequence. Once these bits are set to logic 0, both the FLASH data and Special Setting Registers can not be accessed again.

Bit 1:MOVC inhibit
0: MOVC inhibit enable
1: MOVC inhibit disable
This bit is used to restrict the accessible region of the MOVC instruction. It can prevent the MOVC instruction in external program memory from reading the internal program code. When this bit is set to logic 0, a MOVC instruction in external program memory space will be able to access code only in the external memory, not in the internal memory. A MOVC instruction in internal program memory space will always be able to access the ROM data in both internal and external memory. If this bit is logic 1, there are no restrictions on the MOVC instruction.

Bit2: CBS
Config boot select at Power-on reset and external reset.
CBS=1: Boot from AP Flash block (default).
CBS=0: Boot from LD Flash block (0x3800).

Bit 3: NSR (Noise Sensitivity Reduction)
NSR=1: Noise Sensitivity Reduction is disabled.
NSR=0: Noise Sensitivity Reduction is enabled.

Bit 4: Must be "1"

Bit 5: Machine Cycle Select
This bit is select MCU core, default value is logic 1, the MCU core is 12T per instruction. Once this bit is set to logic 0, the MCU core is 6T per instruction.

Bit 6: Must be "1"

Bit 7: Crystal Select
0 (24MHz): If system clock is slower than 24MHz, programming "0". It can reduce EMI effect and save the power consumption.
1 (40MHz): If system clock is faster than 24MHz, programming "1".

20 TYPICAL APPLICATION CIRCUITS

External Program Memory and Crystal

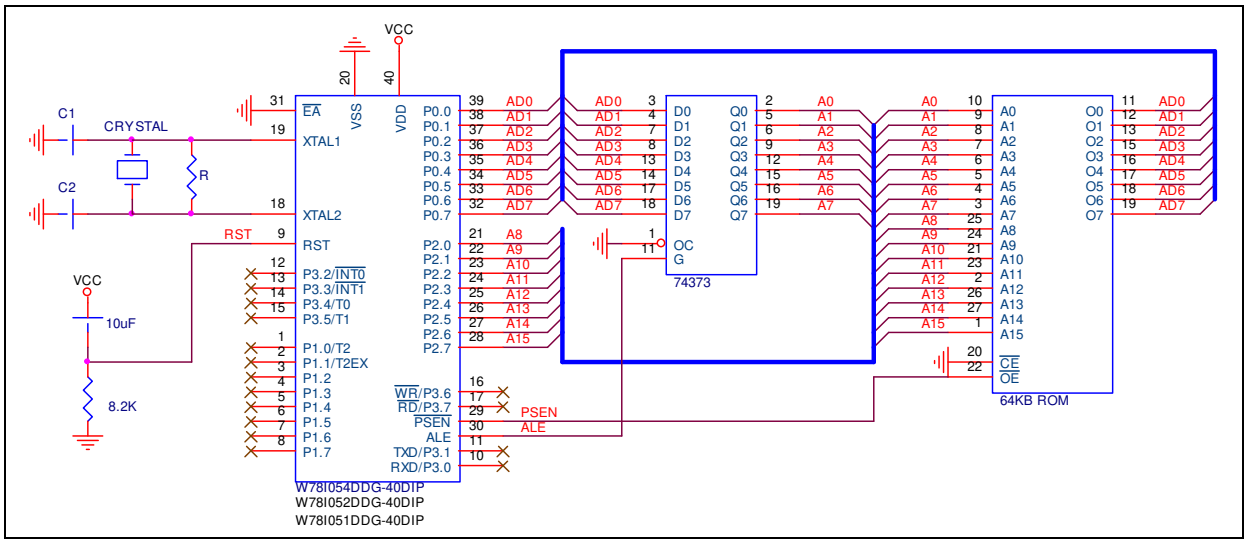

Figure A

Expanded External Data Memory and Oscillator

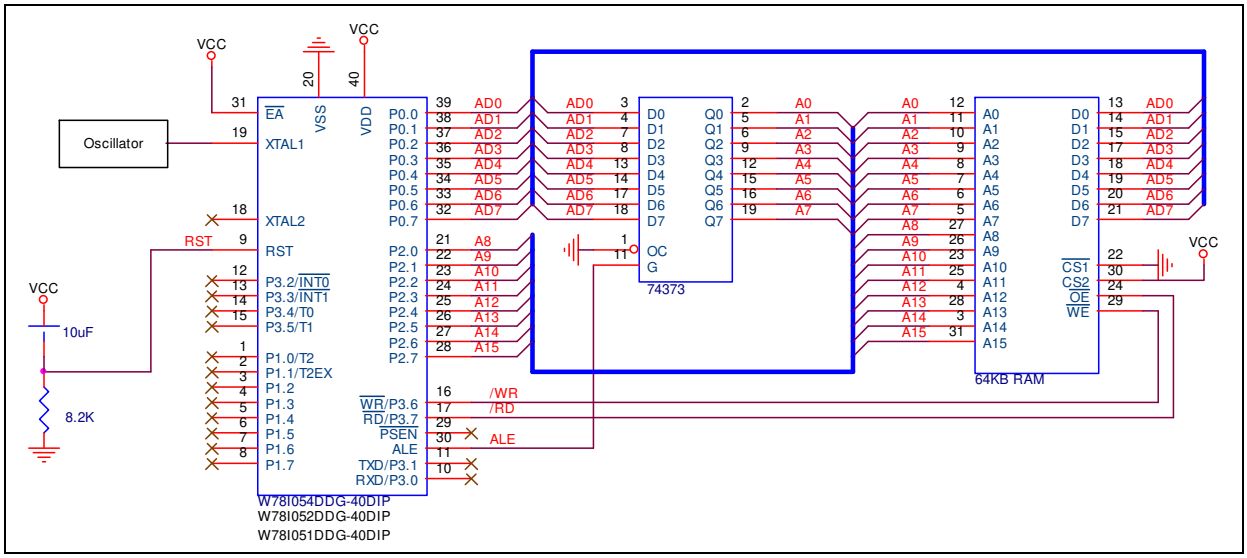

Figure B

21 ELECTRICAL CHARACTERISTICS

21.1 Absolute Maximum Ratings

SYMBOL	PARAMETER	Min	MAX	UNIT
DC Power Supply	V_{DD}–V_{SS}	2.4	5.5	V
Input Voltage	V_{IN}	V_{SS}-0.3	V_{DD}+0.3	V
Operating Temperature (W78I054D/W78I052D/W78I051D)	T_A	-40	+85	°C

Note: Exposure to conditions beyond those listed under absolute maximum ratings may adversely affects the lift and reliability of the device.

21.2 DC ELECTRICAL CHARACTERISTICS

T_A =-40℃~+85℃, V_{DD}=2.4V~5.5V, V_{SS}=0V

Sym	Parameter	Test Condition	Min	Typ[*1]	Max	Unit
V_{IL}	Input Low Voltage (Ports 0~4, /EA, XTAL1, RST)	2.4 < V_{DD} < 5.5V	-0.5		0.2V_{DD} -0.1	V
V_{IH}	Input High Voltage (Ports 0~4, /EA)	2.4 < V_{DD} < 5.5V	0.2V_{DD} +0.9		V_{DD}+ 0.5	V
V_{IH1}	Input High Voltage (XTAL1, RST)	2.4 < V_{DD} < 5.5V	0.7V_{DD}		V_{DD}+ 0.5	V
V_{OL}	Output Low Voltage (Ports 0~4, ALE, /PSEN)	V_{DD}=4.5V, I_{OL}= 12.0mA[*3,*4] V_{DD}=2.4V, I_{OL}= 10mA[*3,*4]			0.4	V
V_{OH1}	Output High Voltage (Ports 1~4)	V_{DD}=4.5V, I_{OH}= -300μA[*4] V_{DD}=2.4V, I_{OH}= -35μA[*4]	2.4 2.0			V
V_{OH2}	Output High Voltage (Ports 0 & 2 in external bus mode, ALE, /PSEN)	V_{DD}=4.5V, I_{OH}= -8.0mA[*4] V_{DD}=2.4V, I_{OH}= -2.2mA[*4]	2.4 2.0			V
I_{IL}	Logical 0 Input Current (Ports 1~4)	V_{DD}=5.5V, V_{IN}=0.4V		-45	-50	μA
I_{TL}	Logical 1-to-0 Transition Current (Ports 1~4) [*2]	V_{DD}=5.5V, V_{IN}=2.0V		-510	-650	μA
I_{LI}	Input Leakage Current (Port 0)	0 < V_{IN} < V_{DD}+0.5		±0.1	±10	μA
I_{DD}	Power Supply Current	Active mode[*5] @12MHz, V_{DD}=5.0V @40MHz, V_{DD}=5.0V @12MHz, V_{DD}=3.3V @20MHz, V_{DD}=3.3V		 9.5 16.0 3.1 3.7		mA
		Idle mode @12MHz, V_{DD}=5.0V @40MHz, V_{DD}=5.0V @12MHz, V_{DD}=3.3V @20MHz, V_{DD}=3.3V		 3.5 9.2 1.2 1.7		mA
		Power-down mode		<1	50	μA
R_{RST}	RST-pin Internal Pull-down Resistor	2.4 < V_{DD} < 5.5V	100		225	KΩ

Note:

*1: Typical values are not guaranteed. The values listed are tested at room temperature and based on a limited number of samples.

*2: Pins of ports 1~4 source a transition current when they are being externally driven from 1 to 0. The transition current reaches its maximum value when V_{IN} is approximately 2V.

*3: Under steady state (non-transient) conditions, I_{OL} must be externally limited as follows:
Maximum I_{OL} per port pin: 20mA
Maximum I_{OL} per 8-bit port: 40mA
Maximum total I_{OL} for all outputs: 100mA

*4: If I_{OH} exceeds the test condition, V_{OH} will be lower than the listed specification.
If I_{OL} exceeds the test condition, V_{OL} will be higher than the listed specification.

*5: Tested while CPU is kept in reset state and EA=H, Port0=H.

Voltage	**Max.** Frequency	6T/12T mode	Note
4.5-5.5V	40MHz	12T	
4.5-5.5V	20MHz	6T	
2.4V	20MHz	12T	
2.4V	10MHz	6T	

Frequency VS Voltage Table

21.3 AC ELECTRICAL CHARACTERISTICS

The AC specifications are a function of the particular process used to manufacture the part, the ratings of the I/O buffers, the capacitive load, and the internal routing capacitance. Most of the specifications can be expressed in terms of multiple input clock periods (TCP), and actual parts will usually experience less than a ±20 nS variation.

21.3.1 Clock Input Waveform

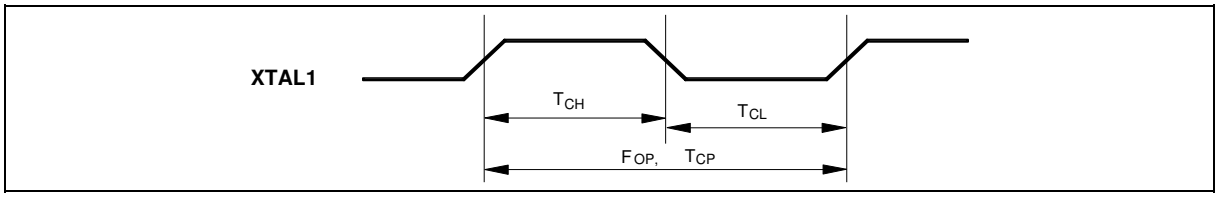

PARAMETER	SYMBOL	MIN.	TYP.	MAX.	UNIT	NOTES
Operating Speed	Fop	0	-	40	MHz	1
Clock Period	TCP	25	-	-	nS	2
Clock High	Tch	10	-	-	nS	3
Clock Low	Tcl	10	-	-	nS	3

Notes:
1. The clock may be stopped indefinitely in either state.
2. The TCP specification is used as a reference in other specifications.

3. There are no duty cycle requirements on the XTAL1 input.

21.3.2 Program Fetch Cycle

PARAMETER	SYMBOL	MIN.	TYP.	MAX.	UNIT	NOTES
Address Valid to ALE Low	Taas	1 TCP - Δ	-	-	nS	4
Address Hold from ALE Low	Taah	1 TCP - Δ	-	-	nS	1, 4
ALE Low to $\overline{\text{PSEN}}$ Low	Tapl	1 TCP - Δ	-	-	nS	4
$\overline{\text{PSEN}}$ Low to Data Valid	Tpda	-	-	2 TCP	nS	2
Data Hold after $\overline{\text{PSEN}}$ High	Tpdh	0	-	1 TCP	nS	3
Data Float after $\overline{\text{PSEN}}$ High	Tpdz	0	-	1 TCP	nS	
ALE Pulse Width	Talw	2 TCP - Δ	2 TCP	-	nS	4
$\overline{\text{PSEN}}$ Pulse Width	Tpsw	3 TCP - Δ	3 TCP	-	nS	4

Notes:

1. P0.0–P0.7, P2.0–P2.7 remain stable throughout entire memory cycle.
2. Memory access time is 3 TCP.
3. Data have been latched internally prior to $\overline{\text{PSEN}}$ going high.
4. "Δ" (due to buffer driving delay and wire loading) is 20 nS.

21.3.3 Data Read Cycle

PARAMETER	SYMBOL	MIN.	TYP.	MAX.	UNIT	NOTES
ALE Low to $\overline{\text{RD}}$ Low	Tdar	3 TCP -Δ	-	3 TCP +Δ	nS	1, 2
$\overline{\text{RD}}$ Low to Data Valid	Tdda	-	-	4 TCP	nS	1
Data Hold from $\overline{\text{RD}}$ High	Tddh	0	-	2 TCP	nS	
Data Float from $\overline{\text{RD}}$ High	Tddz	0	-	2 TCP	nS	
$\overline{\text{RD}}$ Pulse Width	Tdrd	6 TCP -Δ	6 TCP	-	nS	2

Notes:

1. Data memory access time is 8 TCP.
2. "Δ" (due to buffer driving delay and wire loading) is 20 nS.

21.3.4 Data Write Cycle

PARAMETER	SYMBOL	MIN.	TYP.	MAX.	UNIT
ALE Low to $\overline{WR}$ Low	Tdaw	3 TCP -Δ	-	3 TCP +Δ	nS
Data Valid to $\overline{WR}$ Low	Tdad	1 TCP -Δ	-	-	nS
Data Hold from $\overline{WR}$ High	Tdwd	1 TCP -Δ	-	-	nS
$\overline{WR}$ Pulse Width	Tdwr	6 TCP -Δ	6 TCP	-	nS

Note: "Δ" (due to buffer driving delay and wire loading) is 20 nS.

21.3.5 Port Access Cycle

PARAMETER	SYMBOL	MIN.	TYP.	MAX.	UNIT
Port Input Setup to ALE Low	Tpds	1 TCP	-	-	nS
Port Input Hold from ALE Low	Tpdh	0	-	-	nS
Port Output to ALE	Tpda	1 TCP	-	-	nS

Note: Ports are read during S5P2, and output data becomes available at the end of S6P2. The timing data are referenced to

ALE, since it provides a convenient reference.

21.3.6 Program Operation

PARAMETER	Symbol	Min.	TYP.	Max.	Unit
VPP Setup Time	TVPS	2.0	-	-	μS
Data Setup Time	TDS	2.0	-	-	μS
Data Hold Time	TDH	2.0	-	-	μS
Address Setup Time	TAS	2.0	-	-	μS
Address Hold Time	TAH	0	-	-	μS
$\overline{CE}$ Program Pulse Width for Program Operation	TPWP	290	300	310	μS
OECTRL Setup Time	TOCS	2.0	-	-	μS
OECTRL Hold Time	TOCH	2.0	-	-	μS
$\overline{OE}$ Setup Time	TOES	2.0	-	-	μS
$\overline{OE}$ High to Output Float	TDFP	0	-	130	nS
Data Valid from $\overline{OE}$	TOEV	-	-	150	nS

Note: Flash data can be accessed only in flash mode. The RST pin must pull in VIH status, the ALE pin must pull in VIL status, and the $\overline{PSEN}$ pin must pull in VIH status.

21.4 TIMING waveforms

21.4.1 Program Fetch Cycle

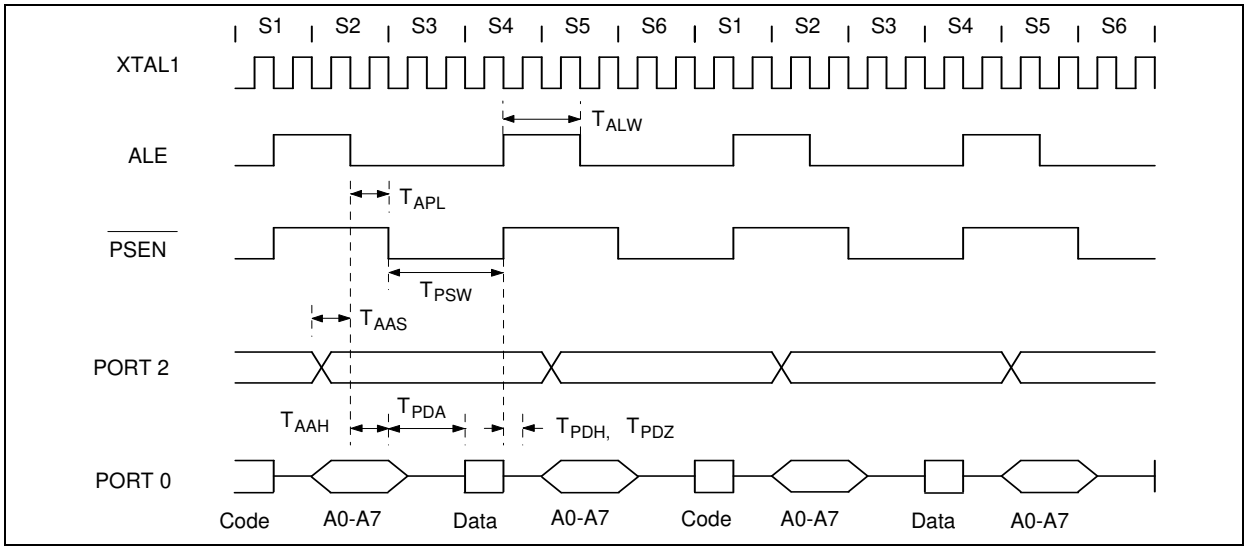

21.4.2 Data Read Cycle

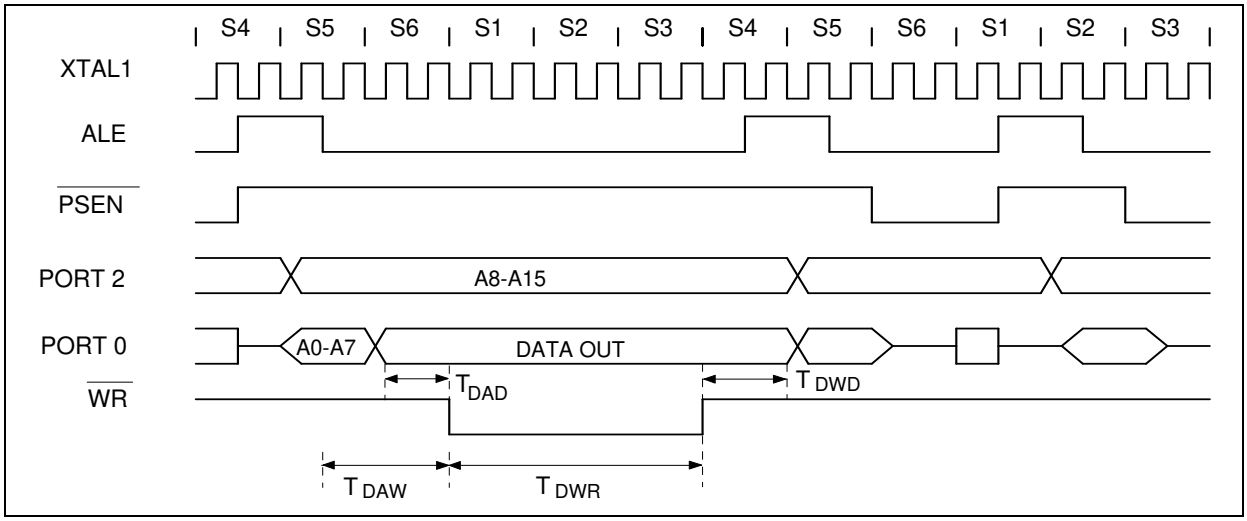

21.4.3 Data Write Cycle

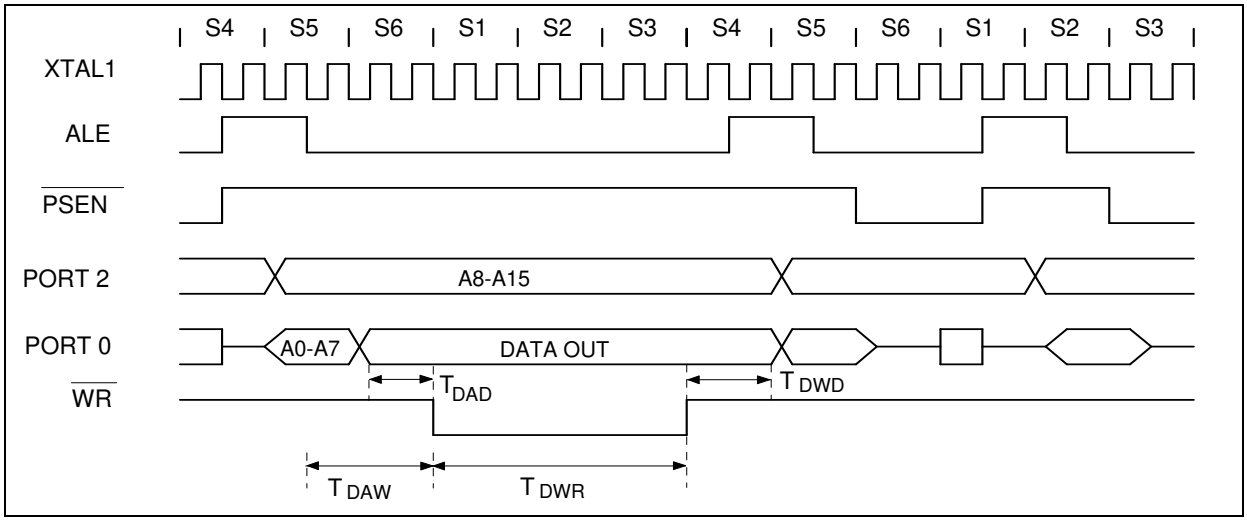

21.4.4 Port Access Cycle

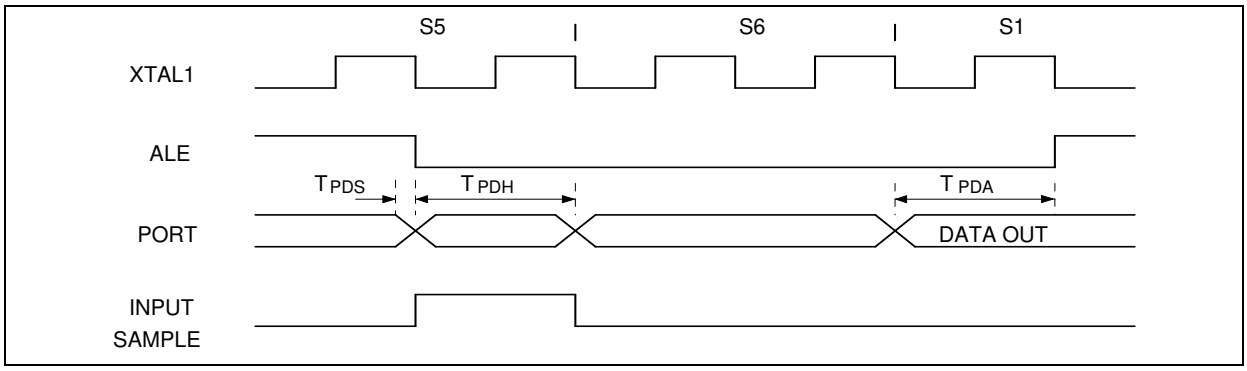

21.4.5 Reset Pin Access Cycle

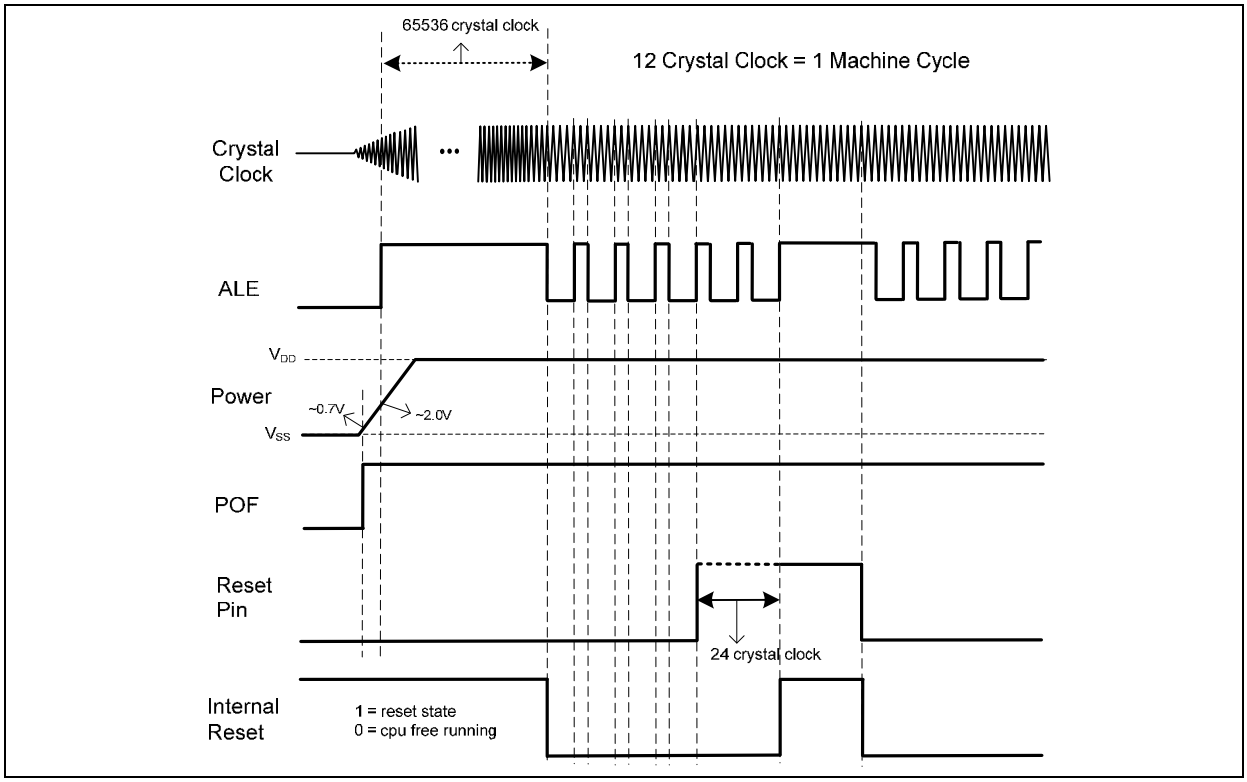

22 PACKAGE DIMENSIONS

22.1 40-pin DIP

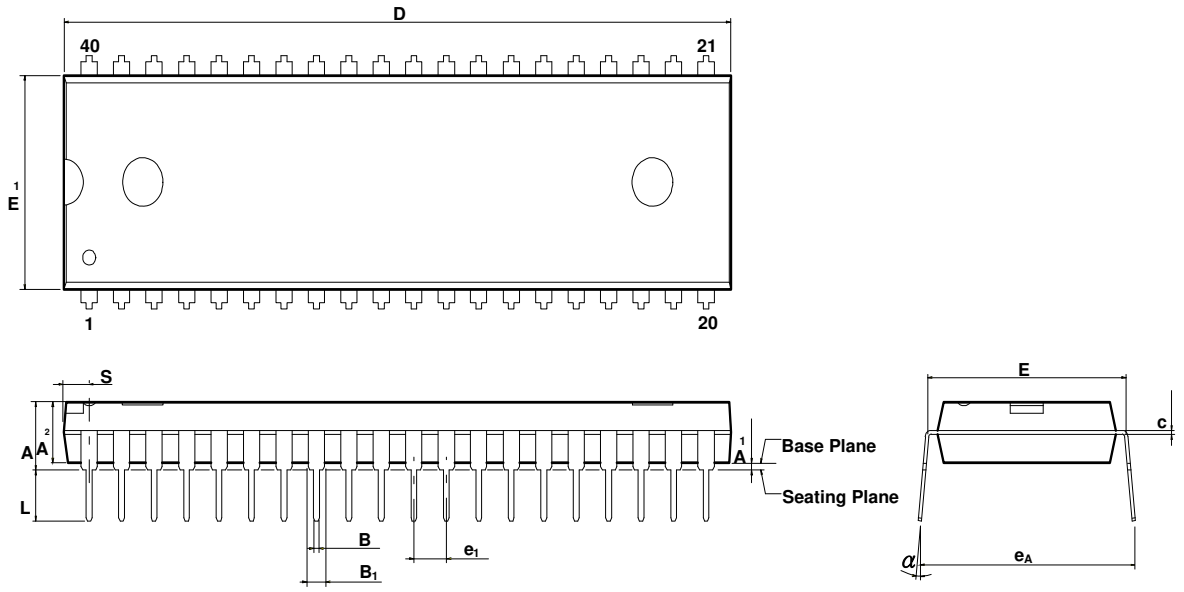

Symbol	Dimension in inch			Dimension in mm		
	Min	Nom	Max	Min	Nom	Max
A	—	—	0.210	—	—	5.33
A_1	0.010	—	—	0.25	—	—
A_2	0.150	0.155	0.160	3.81	3.94	4.06
B	0.016	0.018	0.022	0.41	0.46	0.56
B_1	0.048	0.050	0.054	1.22	1.27	1.37
c	0.008	0.010	0.014	0.20	0.25	0.36
D	—	2.055	2.070	—	52.20	52.58
E	0.590	0.600	0.610	14.99	15.24	15.49
E_1	0.540	0.545	0.550	13.72	13.84	13.97
e_1	0.090	0.100	0.110	2.29	2.54	2.79
L	0.120	0.130	0.140	3.05	3.30	3.56
α	0	—	15	0	—	15
e_A	0.630	0.650	0.670	16.00	16.51	17.02
S	—	—	0.090	—	—	2.29

22.2 44-pin PLCC

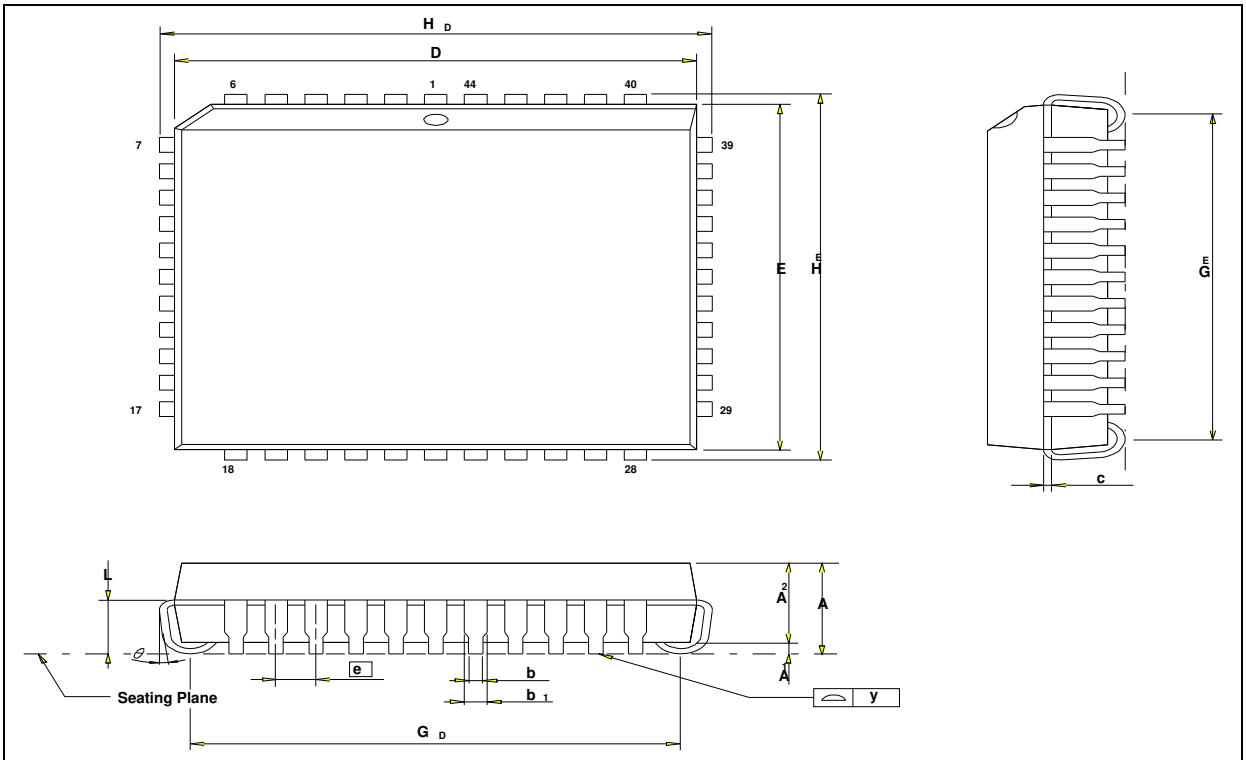

Symbol	Dimension in inch			Dimension in mm		
	Min	Nom	Max	Min	Nom	Max
A	——	——	0.185	——	——	4.70
A 1	0.020	——	——	0.51	——	——
A 2	0.145	0.150	0.155	3.68	3.81	3.94
b 1	0.026	0.028	0.032	0.66	0.71	0.81
b	0.016	0.018	0.022	0.41	0.46	0.56
c	0.008	0.010	0.014	0.20	0.25	0.36
D	0.648	0.653	0.658	16.46	16.59	16.71
E	0.648	0.653	0.658	16.46	16.59	16.71
e	0.050 BSC			1.27 BSC		
G D	0.590	0.610	0.630	14.99	15.49	16.00
G E	0.590	0.610	0.630	14.99	15.49	16.00
H D	0.680	0.690	0.700	17.27	17.53	17.78
H E	0.680	0.690	0.700	17.27	17.53	17.78
L	0.090	0.100	0.110	2.29	2.54	2.79
y	——	——	0.004	——	——	0.10

22.3 44-pin PQFP

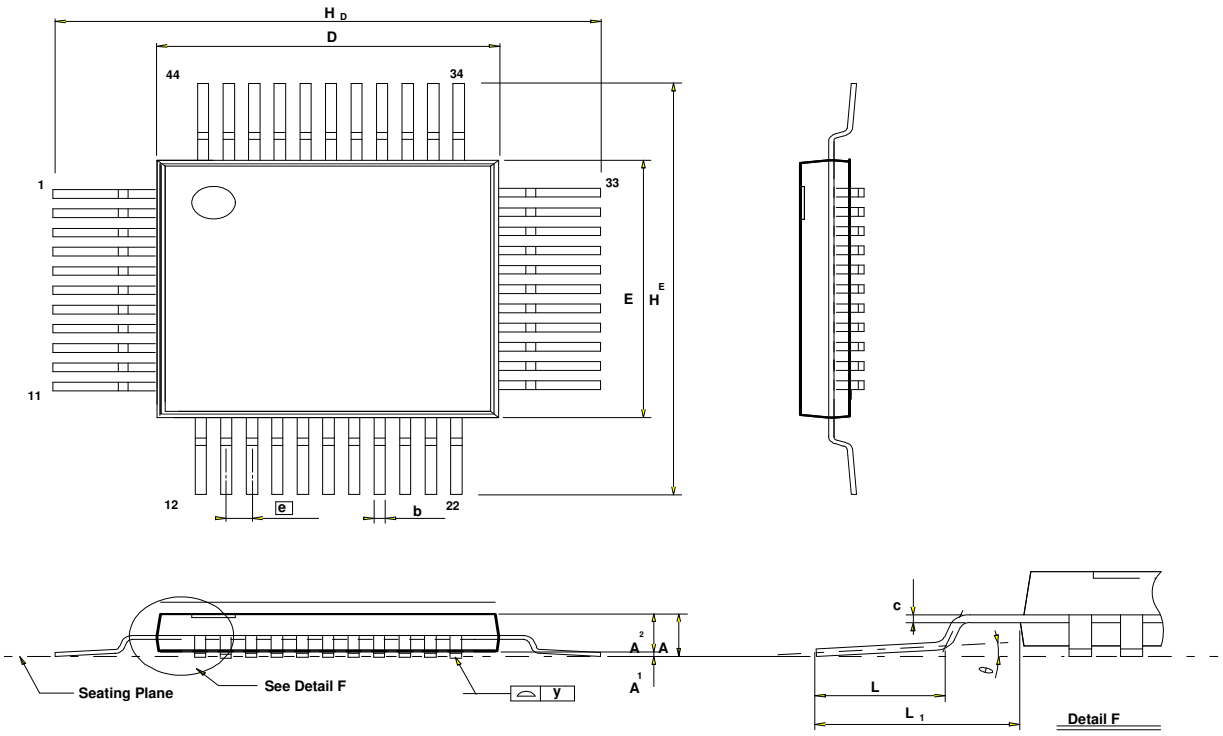

Symbol	Dimension in inch			Dimension in mm		
	Min	Nom	Max	Min	Nom	Max
A	—	—	-	—	—	-
A_1	0.002	0.01	0.02	0.05	0.25	0.5
A_2	0.075	0.081	0.087	1.90	2.05	2.20
b	0.01	0.014	0.018	0.25	0.35	0.45
c	0.004	0.006	0.010	0.10	0.15	0.25
D	0.390	0.394	0.398	9.9	10.00	10.1
E	0.390	0.394	0.398	9.9	10.00	10.1
e	——	.0315	——	——	0.80	——
H_D	0.510	0.520	0.530	12.95	13.20	13.45
H_E	0.510	0.520	0.530	12.95	13.20	13.45
L	0.025	0.031	0.037	0.65	0.8	0.95
L_1	——	0.063	——	——	1.60	——
y	——	——	0.004	——	——	0.10
θ	0 °	——	10 °	0 °	——	10 °

22.4 48-pin LQFP

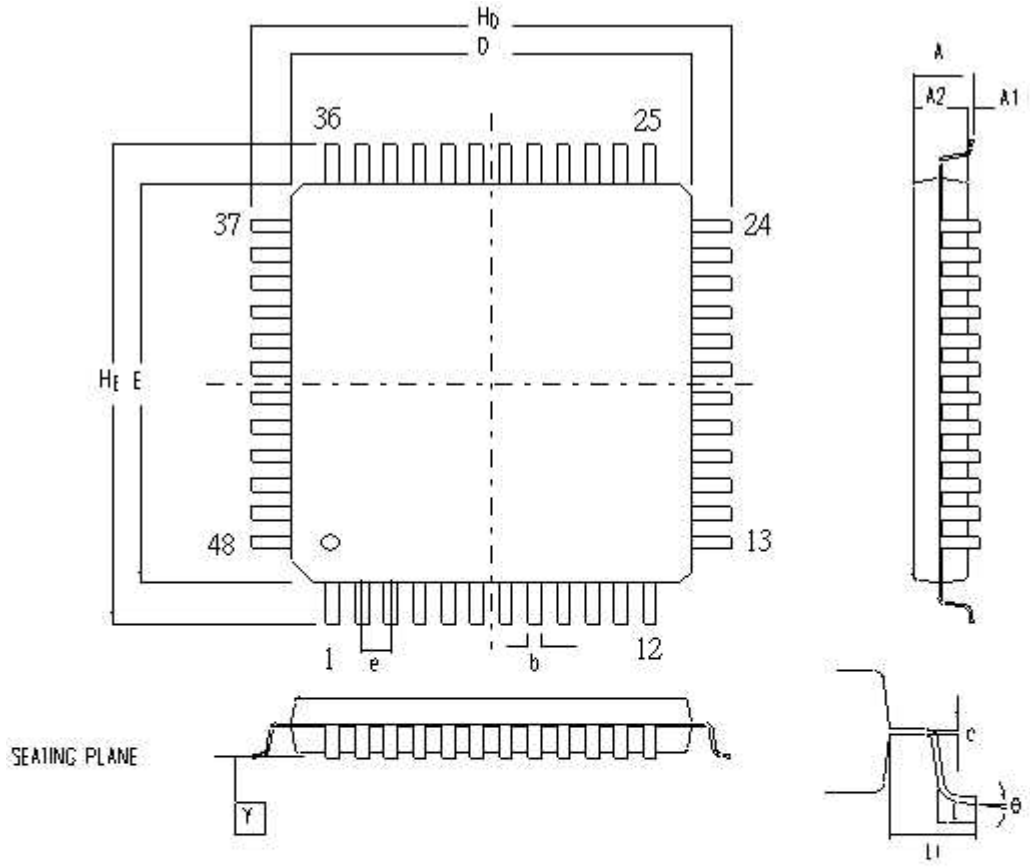

Controlling dimension : Millimeters

Symbol	Dimension in inch			Dimension in mm		
	Min	Nom	Max	Min	Nom	Max
A	—	—	0.063	—	—	1.60
A_1	0.002	0.004	0.006	0.05	0.10	0.15
A_2	0.053	0.055	0.057	1.35	1.40	1.45
b	0.006	0.008	0.010	0.15	0.20	0.25
c	0.004	0.006	0.008	0.10	0.15	0.20
D	0.272	0.276	0.280	6.90	7.00	7.10
E	0.272	0.276	0.280	6.90	7.00	7.10
e	0.014	0.020	0.026	0.35	0.50	0.65
H_D	0.350	0.354	0.358	8.90	9.00	9.10
H_E	0.350	0.354	0.358	8.90	9.00	9.10
L	0.018	0.024	0.030	0.45	0.60	0.75
L_1	—	0.039	—	—	1.00	—
Y	—	—	0.004	—	—	0.10
θ	0°	—	7°	0°	—	7°

Application Note: In-system Programming Software Examples

This application note illustrates the in-system programmability of the microcontroller. In this example, microcontroller will boot from 2K LDROM bank enter in-system programming mode for programming the contents of APROM, this sample to Erase APROM, Erase Verify APROM, Read one byte for APROM, Write one byte for APROM, Read CID/DID. .

EXAMPLE: Base on Keil C51 Compiler

```
$nomod51
#include <reg52.h>

EAPAGE                DATA     0BEh
CHPCON                DATA     0BFh
SFRAL                 DATA     0C4h
SFRAH                 DATA     0C5h
SFRFD                 DATA     0C6h
SFRCN                 DATA     0C7h

;CPU Clock = 12MHz/12T mode
READ_TIME             EQU      1
PROGRAM_TIME          EQU      50
ERASE_TIME            EQU      5000

;For W78E(I)054D
APROM_END_ADDRESS     EQU      03800h
;For W78E(I)052D
;APROM_END_ADDRESS     EQU      02000h
;For W78E(I)051D
;APROM_END_ADDRESS     EQU      01000h

FLASH_STANDBY         EQU      00111111B
READ_CID              EQU      00001011B
READ_DID              EQU      00001100B
ERASE_ROM             EQU      00100010B
ERASE_VERIFY          EQU      00001001B
PROGRAM_ROM           EQU      00100001B
PROGRAM_VERIFY_ROM    EQU      00001010B
READ_ROM              EQU      00000000B

    ORG       03800h
```

```
    mov     SP,#060h
    mov     TMOD,#01h           ;Set Timer0 as mode1
    call    Read_Company_ID
    call    Read_Device_ID_HIGH
    call    Read_Device_ID_LOW
    call    Erase_APROM
    call    Erase_Verify_ROM
    call    Program_APROM
    call    Program_Verify_APROM
    call    Software_Reset
    sjmp    $
;*******************************************************************************
; * Read_Company_ID
;*******************************************************************************
Read_Company_ID:
    mov     SFRCN,#READ_CID
    mov     TL0,#LOW (65536-READ_TIME)
    mov     TH0,#HIGH(65536-READ_TIME)
    setb    TR0
    mov     CHPCON,#00000011b
    clr     TF0
    clr     TR0
    mov     A,SFRFD             ;check Read company ID
    cjne    A,#0DAh,CID_Error
    ret
CID_Error:
    mov     P1,#01h
    sjmp    $
;*******************************************************************************
; * read device ID high
;*******************************************************************************
Read_Device_ID_HIGH:
    mov     SFRAL,#0FFh
    mov     SFRAH,#0FFh
    mov     SFRCN,#READ_DID
    mov     TL0,#LOW (65536-READ_TIME)
    mov     TH0,#HIGH(65536-READ_TIME)
    setb    TR0
```

```
    mov     CHPCON,#00000011b
    clr     TF0
    clr     TR0
    mov     A,SFRFD             ;read device id high byte
    ret
;*****************************************************************************
; * read device ID low
;*****************************************************************************
Read_Device_ID_LOW:
    mov     SFRAL,#0FEh
    mov     SFRAH,#0FFh
    mov     SFRCN,#READ_DID
    mov     TL0,#LOW (65536-READ_TIME)
    mov     TH0,#HIGH(65536-READ_TIME)
    setb    TR0
    mov     CHPCON,#00000011b
    clr     TF0
    clr     TR0
    mov     A,SFRFD             ;read device id low byte
    ret
;*****************************************************************************
;*  Flash standby mode
;*****************************************************************************
Standby:
    mov     SFRCN,#FLASH_STANDBY
    mov     SFRFD,#0FFh
    mov     SFRAL,#0FFh
    mov     SFRAH,#0FFh
    setb    TR0
    mov     CHPCON,#00000011b
    clr     TF0
    clr     TR0
    ret
;*****************************************************************************
;*  Erase APROM
;*****************************************************************************
Erase_APROM:
    mov     EAPAGE,#01h         ;set EAPAGE is APROM
    mov     SFRCN,#ERASE_ROM
```

```
    mov     TL0,#LOW (65536-ERASE_TIME)
    mov     TH0,#HIGH(65536-ERASE_TIME)
    setb    TR0
    mov     CHPCON,#00000011b
    mov     EAPAGE,#00h         ;clear EAPAGE
    clr     TF0
    clr     TR0
    ret
;*********************************************************************
; * VERIFY APROM BANK
;*********************************************************************
Erase_Verify_ROM:
    mov     SFRCN,#ERASE_VERIFY
    mov     DPTR,#0000h
er_lp:
    mov     TL0,#LOW (65536-READ_TIME)
    mov     TH0,#HIGH(65536-READ_TIME)
    mov     SFRAL,DPL
    mov     SFRAH,DPH
    setb    TR0
    mov     CHPCON,#00000011b
    clr     TF0
    clr     TR0
    mov     A,SFRFD
    cjne    A,#0FFh,Erase_Verify_Error
    inc     DPTR
    mov     R0,DPL
    cjne    R0,#LOW (APROM_END_ADDRESS),er_lp
    mov     R1,DPH
    cjne    R1,#HIGH(APROM_END_ADDRESS),er_lp
    ret
Erase_Verify_Error:
    mov     P1,#02h
    sjmp    $
;*********************************************************************************
;*PROGRAMMING APROM BANK, APROM write 55h,AAh,55h,AAh.......
;*********************************************************************************
Program_APROM:
```

```
    mov     SFRCN,#PROGRAM_ROM
    mov     DPTR,#0000h
    mov     A,#055h
wr_lp:
    mov     TH0,#HIGH(65536-PROGRAM_TIME)
    mov     TL0,#LOW (65536-PROGRAM_TIME)
    mov     SFRFD,A
    mov     SFRAL,DPL
    mov     SFRAH,DPH
    setb    TR0
    mov     CHPCON,#00000011b
    clr     TF0
    clr     TR0
    cpl     A
    inc     DPTR
    mov     R0,DPL
    cjne    R0,#LOW (APROM_END_ADDRESS),wr_lp
    mov     R1,DPH
    cjne    R1,#HIGH(APROM_END_ADDRESS),wr_lp
    ret
;*********************************************************************************
;*Program Verify APROM BANK, read APROM 55h,AAh,55h,AAh........
;*********************************************************************************
Program_Verify_APROM:
    mov     SFRCN,#PROGRAM_VERIFY_ROM
    mov     DPTR,#0000h
    mov     B,#055h
rd_lp:
    mov     TH0,#HIGH(65536-READ_TIME)
    mov     TL0,#LOW (65536-READ_TIME)
    mov     SFRAL,DPL
    mov     SFRAH,DPH
    setb    TR0
    mov     CHPCON,#00000011b
    clr     TF0
    clr     TR0
    mov     A,SFRFD
    cjne    A,B,Program_Fail
    mov     A,B
```

```
    cpl     A
    mov     B,A
    inc     DPTR
    mov     R0,DPL
    cjne    R0,#LOW (APROM_END_ADDRESS),rd_lp
    mov     R1,DPH
    cjne    R1,#HIGH(APROM_END_ADDRESS),rd_lp
    ret
Program_Fail:
    mov     P1,#03h
    sjmp    $
;*******************************************************************************
;* PROGRAMMING COMPLETLY, SOFTWARE RESET CPU TO APROM
;*******************************************************************************
Software_Reset:
    MOV     CHPCON,#081h    ;CHPCON=081h, SOFTWARE RESET to APROM.
;*******************************************************************************
;* PROGRAMMING COMPLETLY, SOFTWARE RESET CPU TO LDROM
;*******************************************************************************
    ;MOV CHPCON,#083h    ;CHPCON=083h, SOFTWARE RESET to LDROM.

    sjmp    $

    end
```

23 REVISION HISTORY

VERSION	DATE	PAGE	DESCRIPTION
A01	August 14, 2008	-	Initial Issued
A02	November 3,2008	-	Update DC table typing error.
A03	December 15,2008	-	Update config bit table, and ISP BOOT
A04	January 7,2007	70	Update V_{IL} and V_{IH} .
A05	March 9, 2009	43	Update soft reset, only LD jump to AP function.
A06	March 20, 2009	18 - -	1. Rename SFR Register POR (0x86H) to P0UPR. 2. Revise some typing errors in data sheet. 3. Update DC table
A07	April 22, 2009	68	1. Revise Type Application Circuit in data sheet.
A08	June 30, 2009	30 61 81	1. Add the ISP control table. 2. Revise content of Char. 17. 3. Modify the ISP demo code. 4. Remove the “Preliminary” character for each page.
A09	Dec 30, 2009	68 77	1. Revise the “CONFIG BITS” description for Bit4, Bit6 and Bit7. 2. Add the timing for external reset pin.

Important Notice

Nuvoton products are not designed, intended, authorized or warranted for use as components in systems or equipment intended for surgical implantation, atomic energy control instruments, airplane or spaceship instruments, transportation instruments, traffic signal instruments, combustion control instruments, or for other applications intended to support or sustain life. Further more, Nuvoton products are not intended for applications wherein failure of Nuvoton products could result or lead to a situation wherein personal injury, death or severe property or environmental damage could occur.

Nuvoton customers using or selling these products for use in such applications do so at their own risk and agree to fully indemnify Nuvoton for any damages resulting from such improper use or sales.

Please note that all data and specifications are subject to change without notice.
All the trademarks of products and companies mentioned in this datasheet belong to their respective owners.