WIM2480

The compact-sized BLE 5.2 module, designed for intelligent wireless controls, enables ultra-low power connectivity and provides considerable design flexibility to the engineers. WIM2480, with options for an external or a chip antenna, also has 18 General Purpose IO pins including, 6 PWM, ADC, I2C, UART, and SPI.



Table of Contents

1. Features 3
2. Block Diagram 3
3. Specifications 4
4. Module Dimensions 6
5. Land Pattern Dimensions 7
6. Design Recommendations 8
7. Antenna 9
8. Pinout Details 12
9. Firmware Pin Assignment 14
10. Application Circuit Diagrams 15
11. Soldering Information 19
12. Packaging Information 20
13. Ordering Information 21
14. Precautions 21

1. Features

- BLE 5.2 based non-flooding intelligent mesh
- PWM/AIO/SPI/I2C/UART/IO interfaces
- External or chip antenna options
- TX output power up to +8dBm
- -92dBm RX sensitivity
- 18 programmable GPIOs
- 6 PWM channels
- Compact form factor
- Zero downtime Over-the-Air (OTA) firmware updates

2. Block Diagram

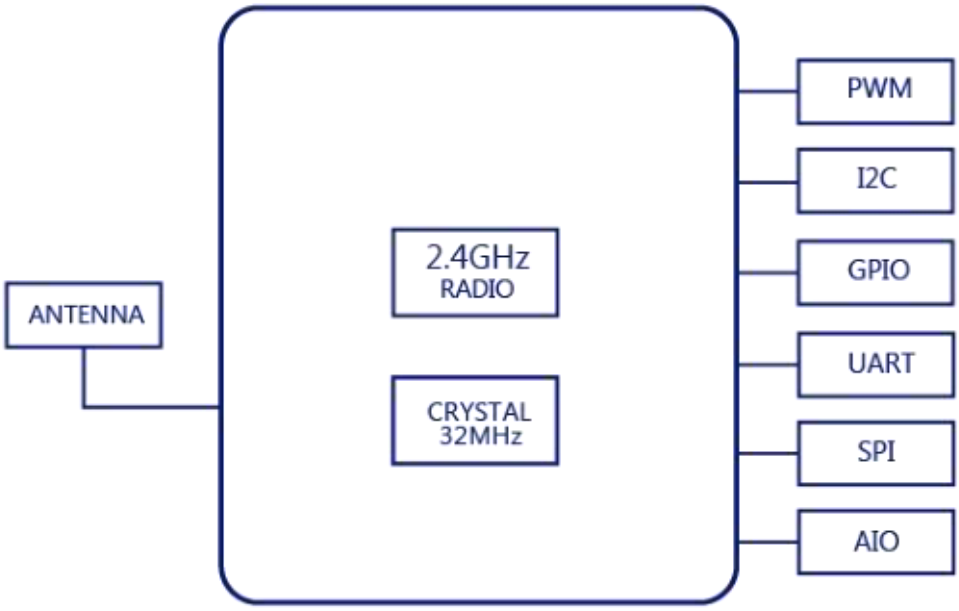

3. Specifications

Electrical specifications

Parameter	Symbol	Min.	Typ.	Max.	Unit
Input voltage	VDD	1.7	3.0	5.5	V
IO supply voltage			VDD		V

RF specifications

Parameter	Min.	Typ.	Max.	Unit
Operating frequency	2402	-	2480	MHz
Maximum output power	-	8	-	dBm
Receiver sensitivity	-	-92	-	dBm

ADC specifications

Parameter	Min.	Typ.	Max.	Unit	Remarks
ADC input voltage	0.6	-	3.6	V	@3.3V input

PWM specifications

Parameter	Symbol	Min.	Typ.	Max.	Unit	Remarks
PWM frequency		0.1	32	1000	kHz	Up to 10KHz for low frequency PWM pins
Maximum voltage for logic low	VIL	0	-	1.08	V	
Absolute maximum current sourced	IMAX	-	-	15	mA	
Absolute maximum voltage level	VMAX	-	-	3.6	V	

Current specifications

Parameter	Min.	Typ.	Max.	Unit	Remarks
Deep sleep current	-	-	1.5	μA	@3V
TX peak current	-	15.5	-	mA	@8dBm
RX peak current	-	6.0	-	mA	@1Mbps

Environmental specifications

Parameter	Symbol	Min.	Max.	Unit
Operating temperature	T_{opr}	-40	85	°C
Storage temperature	T_{str}	-40	125	°C

Mechanical specifications

Parameter	Typ.	Max.	Unit	Remarks
Dimension	22.5 x 8.0 x 2.95		mm	For chip antenna
Dimension	16.60 x 8.0 x 2.41		mm	For external antenna

4. Module Dimensions

External antenna version (WIM2480E)

- Dimensions: 16.60 x 8.0 x 2.41 mm (with external antenna)
- Pitch: 1.33 mm
- Module pad dimensions: 0.737 x 0.698 mm



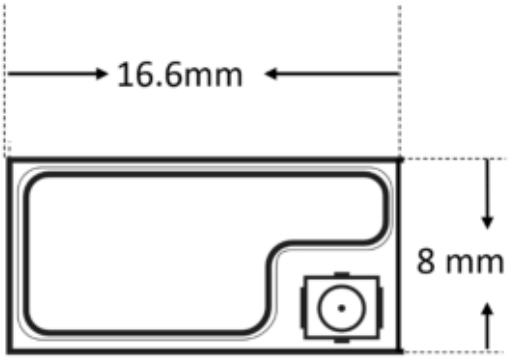

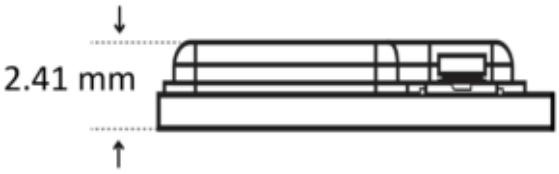

Chip antenna version (WIM2480C)

- Dimensions: 22.50 x 8.0 x 2.95 mm (with chip antenna)
- Pitch: 1.33 mm
- Module pad dimensions: 0.737 x 0.698 mm



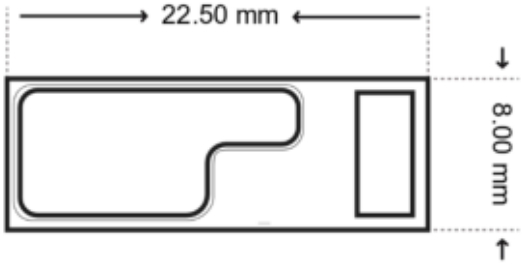

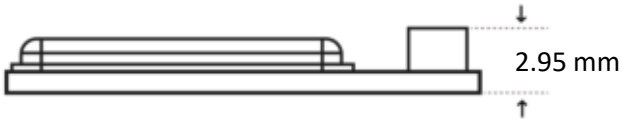

5. Land Pattern Dimensions

All dimensions are in mm

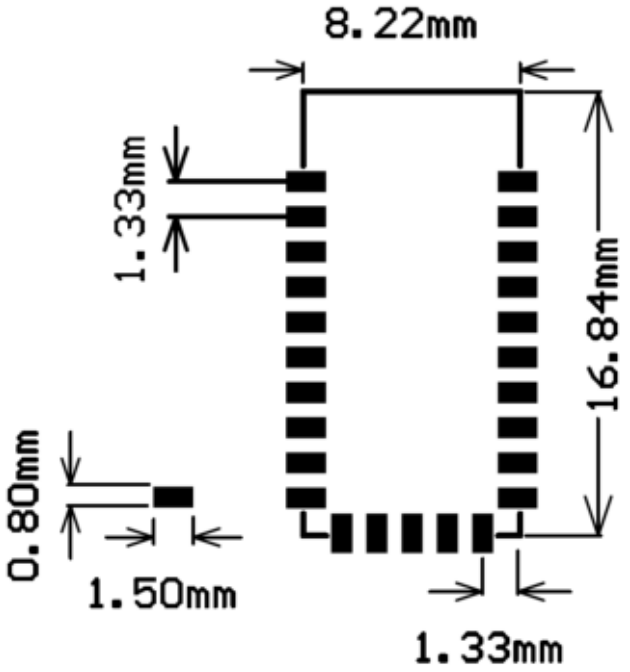

WIM2480E

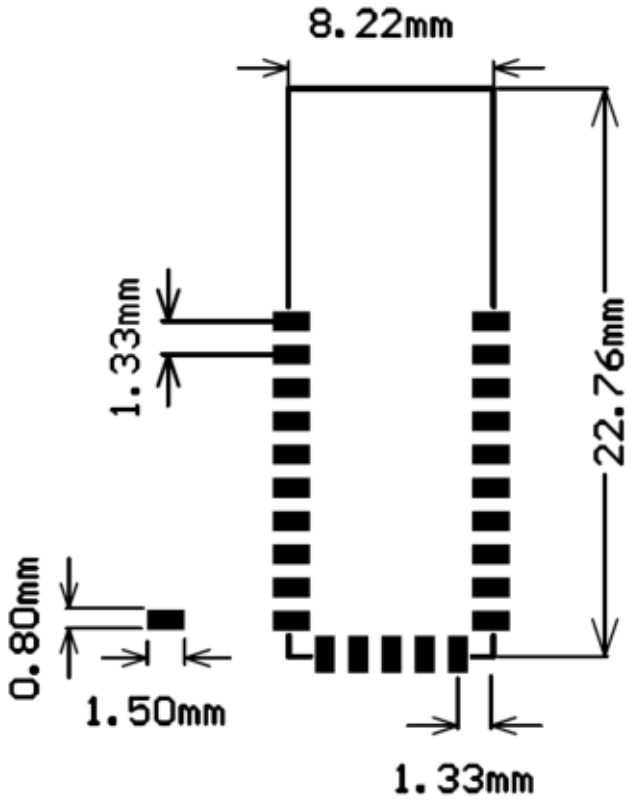

WIM2480C

6. Design Recommendations

a) Keep out enough area for the chip antenna.

b) Avoid any routing under antenna area as shown in the below image.

c) Better to place the module away from High frequency circuitry like other RF, and large components or metallic objects.

d) All GND pins must be well grounded.

e) The area around the module should be free of any ground planes, power planes, trace routings or metal for 6 mm from the module antenna position in all directions.

f) Better not to route any traces underneath the module.

g) The WIM2480 series modules contain highly sensitive electronic circuitry and are Electrostatic Sensitive Devices (ESD). Handling the WIM series modules without proper ESD protection may destroy or damage them permanently.

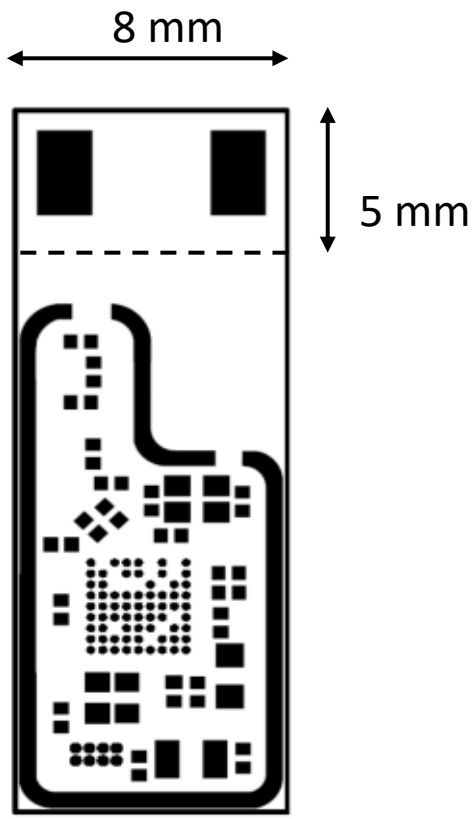

7. Antenna

External wire antenna – 37mm



37mm wire antenna

Antenna Properties	
Frequency range	2.4GHz-2.5GHz
Impedance	50Ω Nominal
VSWR	1.92:1 Max
Return loss	-10dB Max
Gain (Peak)	2dBi
Cable loss	0.3dBi Max

External wire antenna – 100mm



100mm wire antenna

Antenna Properties	
Frequency range	2.4GHz-2.5GHz
Impedance	50Ω Nominal
SWR	≤ 2.0
Gain (Peak)	3dBi

External wire antenna – 600mm



600mm wire antenna

Antenna Properties	
Frequency range	2.4GHz-2.5GHz
Impedance	50Ω Nominal
VSWR	≤ 1.3
Gain (Peak)	3dBi

Stick antenna



Stick antenna

Antenna Properties	
Frequency range	2.4GHz-2.5GHz
Impedance	50Ω Nominal
VSWR	1.92:1 Max
Return loss	-10dB Max
Gain (Peak)	2dBi
Cable loss	0.3dBi Max
Polarization	Linear Vertical

Chip antenna



Chip antenna

Antenna Properties	
Frequency range	2.4 GHz-2.5 GHz
Impedance	50 Ω
Peak Gain	1.7 dBi
VSWR	<2:1
Radiation pattern	Omnidirectional
Polarization	Linear

8. Pinout Details

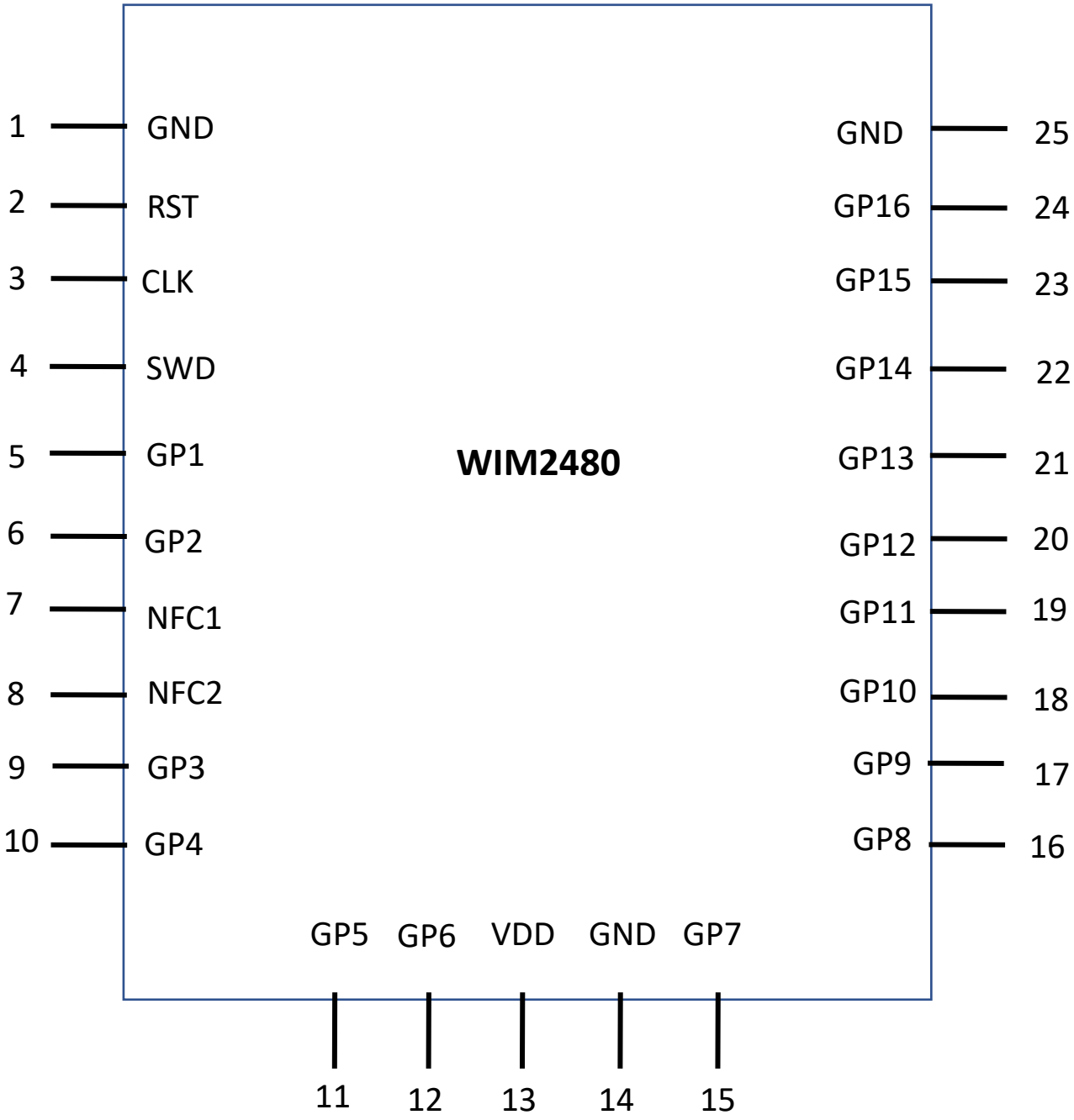

MODULE PIN	CHIP PIN	NAME	SUPPORTING FUNCTIONS	COMMENTS
1		GND	GROUND	Ground
2	H4/P0.18	RST	RESET	Reset
3	H2	CLK	SWDCLK	Serial wire debug clock input for debug and programming
4	J2	SWD	SWDIO	Serial wire debug IO for debug and programming
5	C8/P0.27	GP1	IO/PWM/I2C/SPI/UART	PWM or Digital IO or Serial interface
6	F7/P0.13	GP2	IO/PWM/I2C/SPI/UART	PWM or Digital IO or Serial interface
7	F2/P0.09	NFC1	NFC1/IO	Digital IO (Low Freq)
8	E2/P0.10	NFC2	NFC2/IO	Digital IO (Low Freq)
9	E7/P0.08	GP3	IO/PWM/I2C/SPI/UART	PWM or Digital IO or Serial interface
10	D9/P0.05	GP4	IO/PWM/I2C/SPI/UART/AIO	AIO or Digital IO or PWM or Serial interface
11	J3/P0.22	GP5	IO/PWM/I2C/SPI/UART	PWM or Digital IO or Serial interface
12	J5/P0.17	GP6	IO/PWM/I2C/SPI/UART	PWM or Digital IO or Serial interface
13		VDD	POWER (3.3V)	Power
14		GND	GROUND	Ground
15	A4/P0.03	GP7	IO/PWM/AIO	AIO or Digital IO or PWM (up to 10KHz)
16	A3/P0.25	GP8	IO/PWM	Digital IO or PWM (up to 10KHz)
17	B4/P1.03	GP9	IO/PWM	Digital IO or PWM (up to 10KHz)
18	C6/P0.02	GP10	IO/PWM/AIO	AIO or Digital IO or PWM (up to 10KHz)
19	C4/P1.05	GP11	IO/PWM	Digital IO or PWM (up to 10KHz)
20	C5/P0.19	GP12	IO/PWM	Digital IO or PWM (up to 10KHz)
21	A5/P0.29	GP13	IO/PWM/AIO	AIO or Digital IO or PWM (up to 10KHz)
22	E9/P0.06	GP14	IO/PWM	PWM/ Digital IO
23	C9/P0.26	GP15	IO/PWM/I2C/SPI/UART	PWM or Digital IO or Serial interface
24	F9/P1.08	GP16	IO/PWM/I2C/SPI/UART	PWM or Digital IO or Serial interface
25		GND	GROUND	Ground

Note: If SPI is used with 8 Mbps data rate, the recommended GPIOs for the clock signal (SCK) are GP1, and GP16

9. Firmware Pin Assignment

PROFILE TYPE / PIN DETAILS	Intensity	Intensity, CCT	Relay On/off, Analog dual channel i/p and o/p	Intensity, CCT, motor control
Pin	**24** (GP16)	**23** (GP15)	**20** (GP12)	**10** (GP4)
Functionality	Intensity channel	Cool channel	Relay PIO	UART TX
Pin		**24** (GP16)	**23** (GP15)	**9** (GP3)
Functionality		Warm channel	Color temperature channel	UART RX
Pin			**24** (GP16)	
Functionality			Intensity channel	
Pin			**18** (GP10)	
Functionality			Analog i/p channel 1	
Pin			**21** (GP13)	
Functionality			Analog i/p channel 2	

PROFILE TYPE / PIN DETAILS	Analog dual channel o/p, PIR	RGB, CCT, Intensity	UART	DALI
Pin	**23** (GP15)	**5** (GP1)	**10** (GP4)	**23** (GP15)
Functionality	Color temperature channel	Red channel	UART TX	DALI-
Pin	**24** (GP16)	**6** (GP2)	**9** (GP3)	**24** (GP16)
Functionality	Intensity channel	Green channel	UART RX	DALI+
Pin	**18** (GP10)	**10** (GP4)		
Functionality	Sensor trigger PIO	Blue channel		
Pin	**11** (GP5)	**23** (GP15)		
Functionality	Sensor data communication	Cool channel		
Pin	**12** (GP6)	**24** (GP16)		
Functionality	Sensor data communication	Warm channel		

10. Application Circuit Diagrams

Schematic for RGB, CCT, intensity control

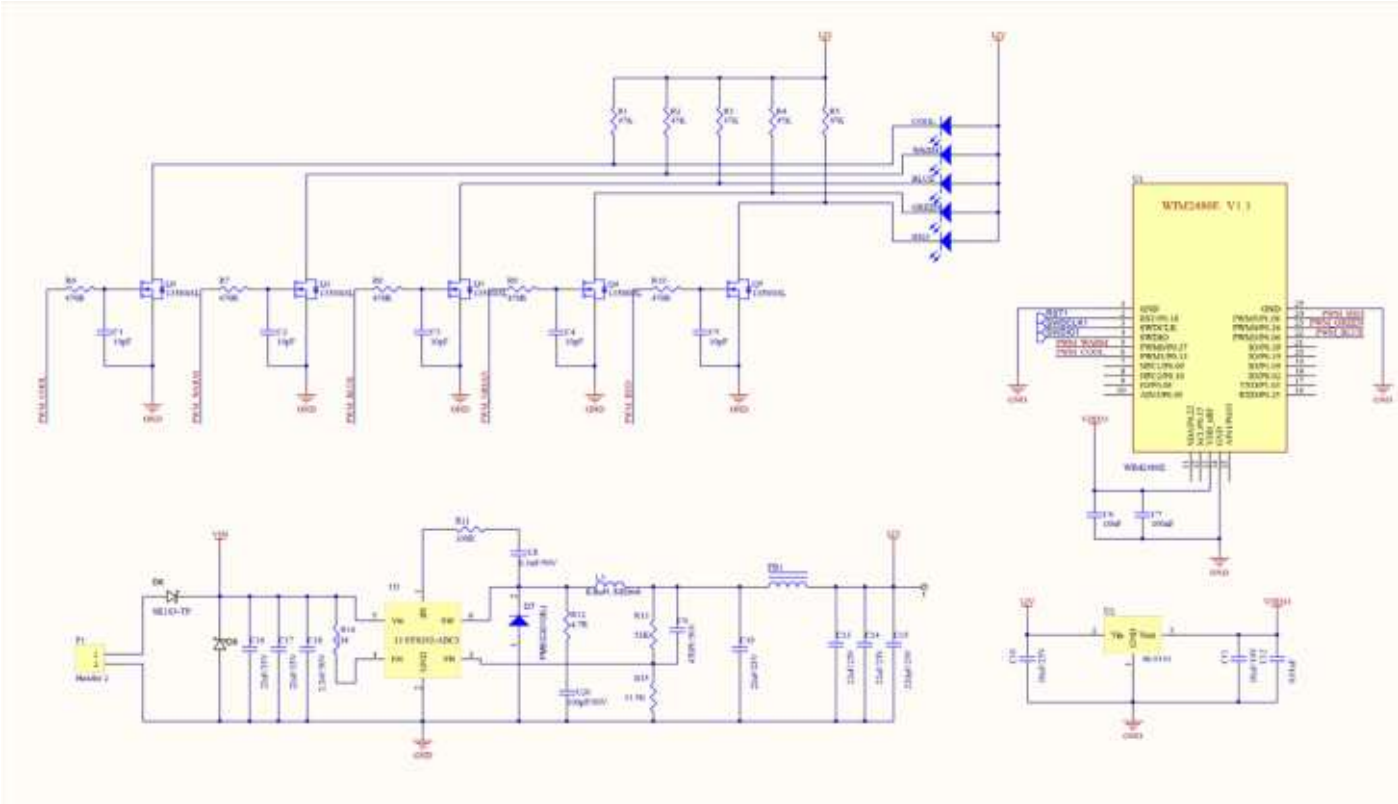

Schematic for dual channel analog 0-10V output

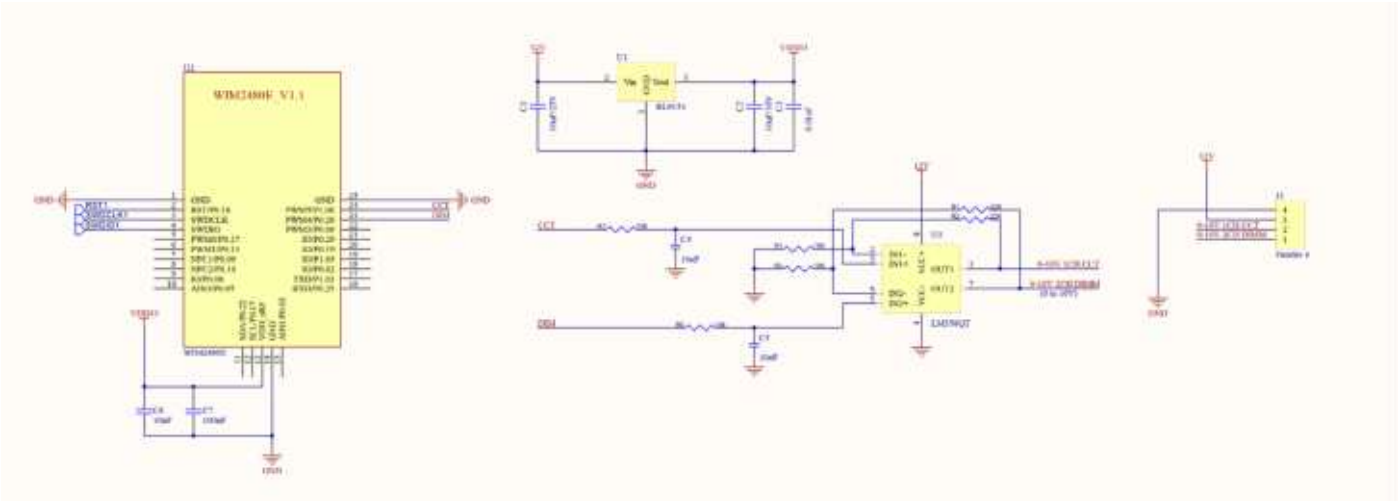

Schematic for AC power monitoring

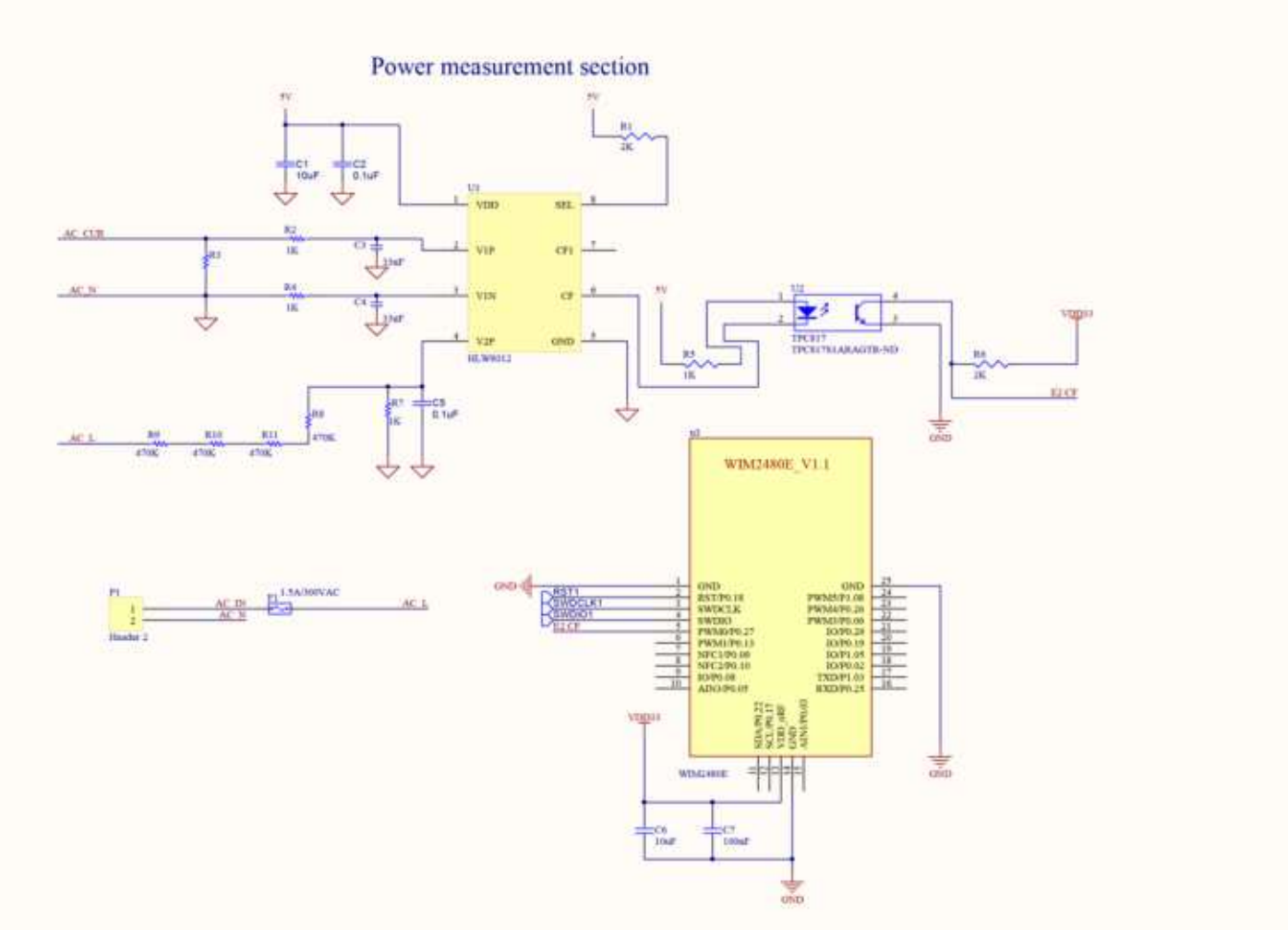

Schematic for smart sensor interfacing

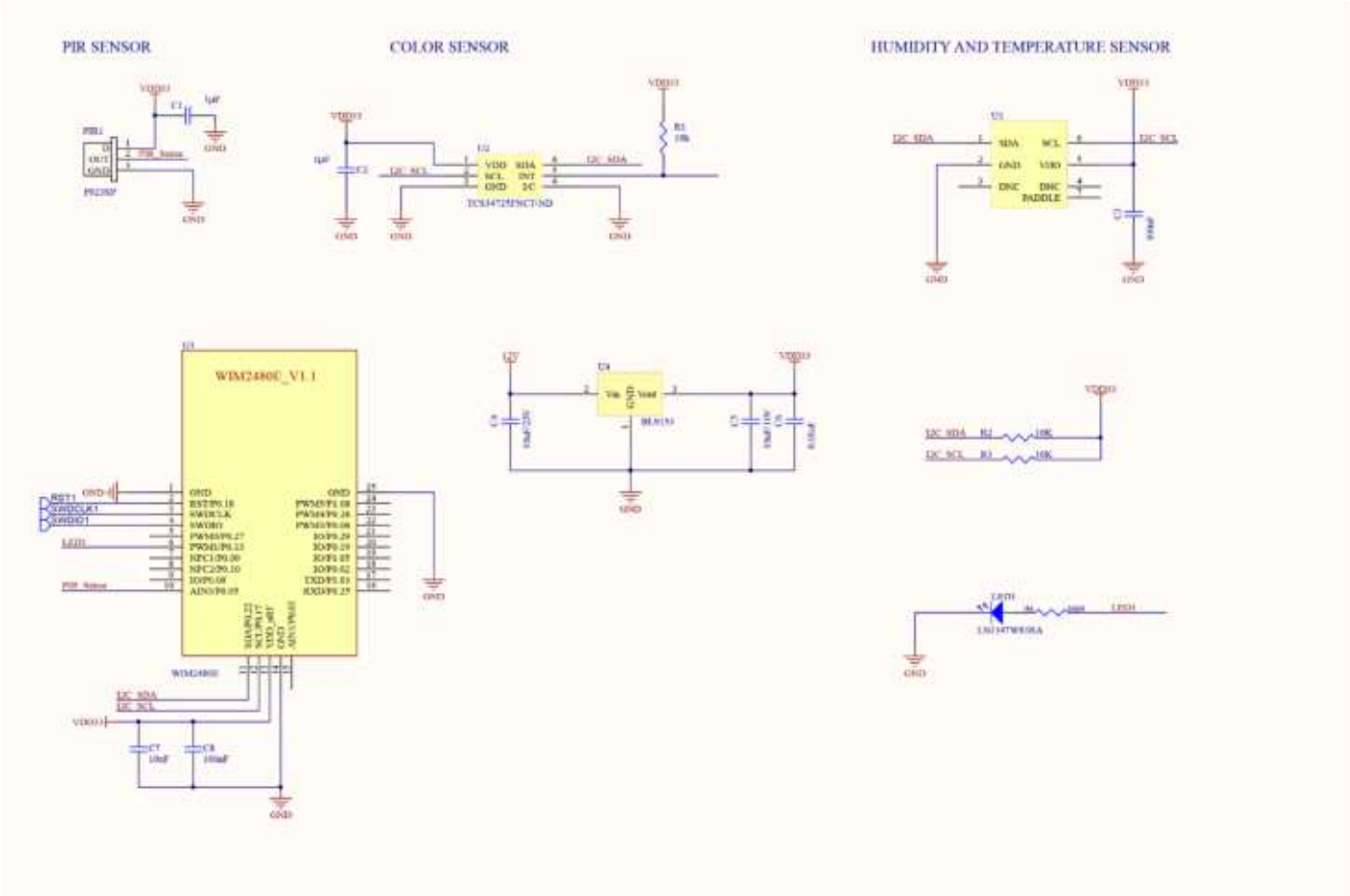

Schematic for smart switch

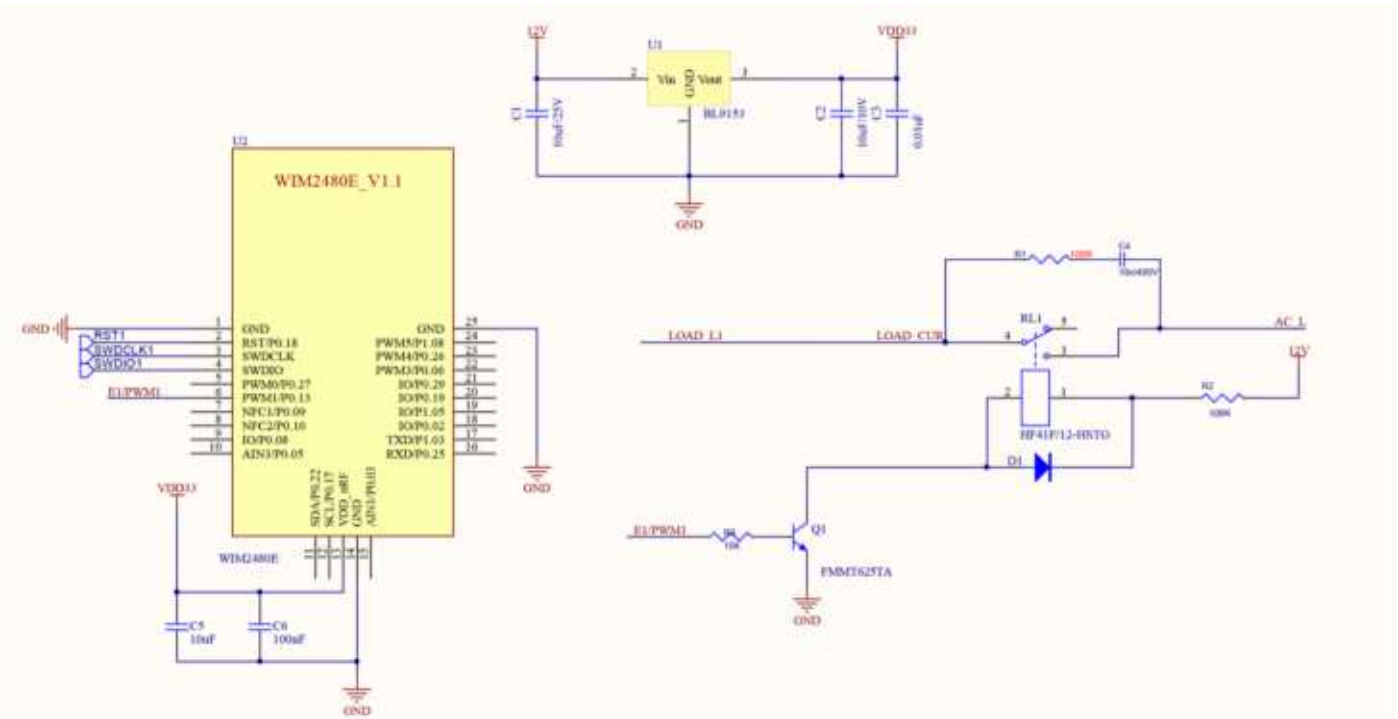

Schematic for warm cool LED control

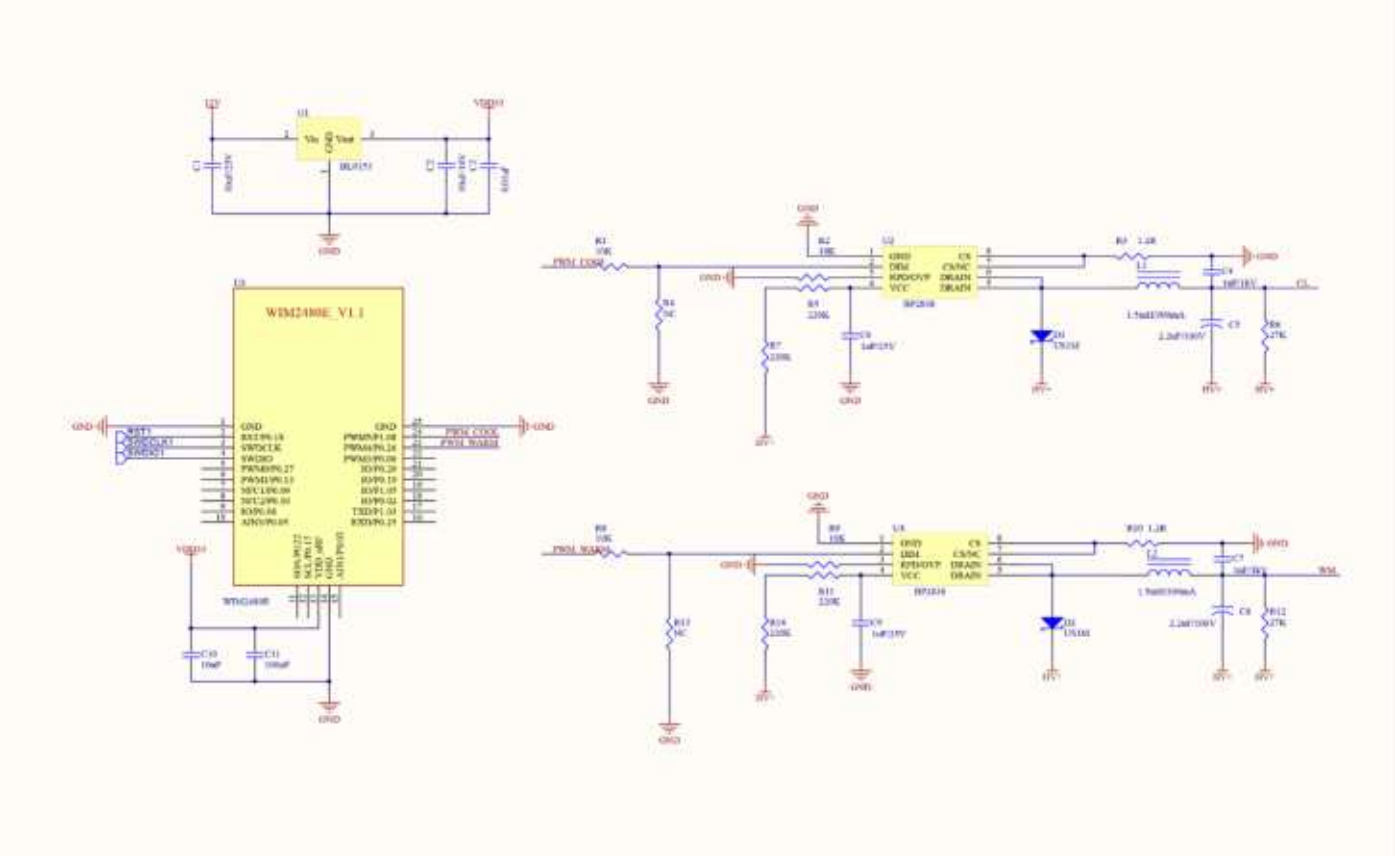

11. Soldering Information

Leadfree reflow soldering

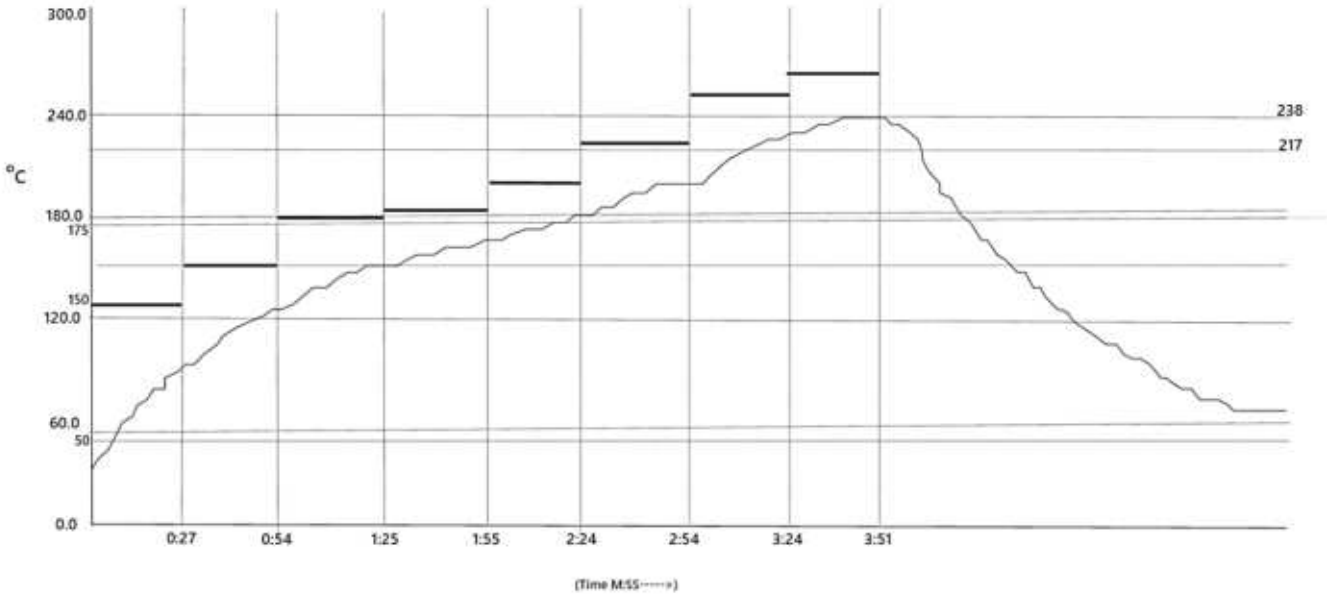

Do not exceed peak temperature (Tp) of 242°C. Time at maximum temperature is 27 seconds. After reflow soldering, optical inspection of the module is recommended to verify proper alignment. Hand soldering is also possible.

Cleaning

In general, cleaning the populated modules is strongly discouraged. Residuals under the module cannot be easily removed with any cleaning process.

1. Cleaning with water can lead to capillary effects where water is absorbed into the gap between the host board and the module. The combination of soldering flux residuals and encapsulated water could lead to short circuits between neighboring pads. Water could also damage any stickers or labels.

2. Cleaning with alcohol or a similar organic solvent will likely flood soldering flux residuals into the RF shield, which is not accessible for post-washing inspection. The solvent could also damage any stickers or labels.

12. Packaging Information

*All dimensions are in mm

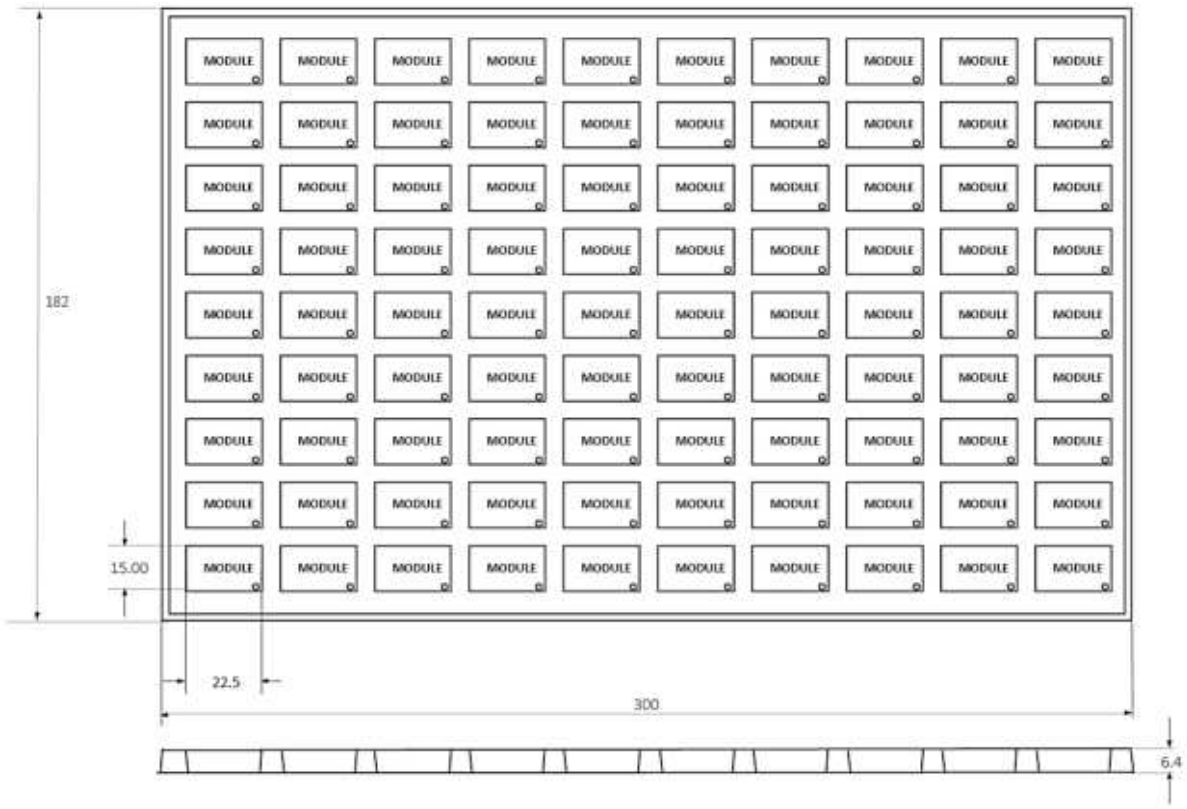

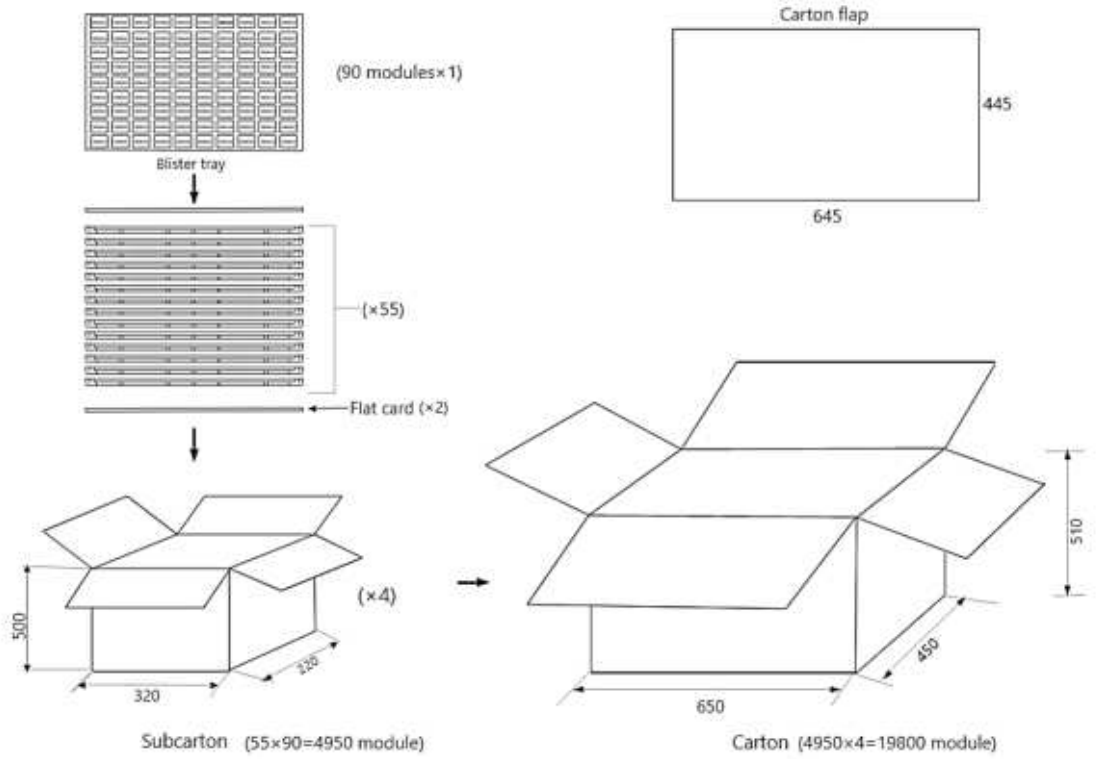

13. Ordering Information

Product code	Communication	Voltage Rating	Analog Channel I/O	PWM I/O	Serial Interface	Antenna	Dimensions (mm)
WIM2480E	BLE 5.2	3.0V DC	4 AIO	6 Channels	UART/SPI/I2C	External	16.60 x 8.0 x 2.41
WIM2480C	BLE 5.2	3.0V DC	4 AIO	6 Channels	UART/SPI/I2C	Chip	22.50 x 8.0 x 2.95

14. Precautions

- While integrating module, make sure all the pads are soldered properly.
- Please use a voltage regulator if the power supply is above the max ratings.
- For best wireless signals, please avoid packing the antenna close to metal parts or cases.
- Stresses above the listed maximum ratings may cause permanent damage to the device.

CONNECTING THINGS TO LIFE

23282 Mill Creek Dr #340, Laguna Hills
CA 92653, USA

Version 1.4