WM7211, WM7211E

Top Port Digital Silicon Microphone

DESCRIPTION

The WM7211 is a low-profile silicon digital microphone. It offers high Signal to Noise Ratio (SNR) and low power consumption and is suited to a wide variety of consumer applications.

The WM7211 incorporates Wolfson's proprietary CMOS/MEMS membrane technology, offering high reliability and high performance in a miniature, low-profile package. The WM7211 is designed to withstand the high temperatures associated with automated flow solder assembly processes. (Note that conventional microphones can be damaged by this process.)

The WM7211 incorporates a high performance ADC, which outputs a single-bit Pulse Density Modulated (PDM) audio data stream. The WM7211 supports selectable left/right channel assignment for a two-channel digital microphone interface, enabling efficient connection of multiple microphones in stereo/array configurations.

The WM7211E variant offers a tighter tolerance on the microphone sensitivity, giving reduced variation between parts. This removes the need for in-line production calibration of part-to-part microphone variations.

FEATURES

- High SNR; selectable sensitivity tolerance options
  - WM7211 – SNR 61dB, Sensitivity +/-3dB
  - WM7211E – SNR 61dB, Sensitivity +/-1dB
- Low power
  - Sleep mode - 2µA
  - Normal operation - 735µA
- Low profile packaging
- Support for automated flow solder assembly
- PDM digital audio output
- Stereo/array operation
- Proprietary ADC technology
  - Reduced clock jitter sensitivity
  - Low noise floor modulation
  - Stable in overload condition
- Top port package
- 1.64V to 3.7V supply
- 4.00 x 3.00 x 1.00mm thin package design

APPLICATIONS

- Mobile telephone handsets
- Portable computers
- Portable media players
- Digital still cameras
- Digital video cameras
- Bluetooth headsets
- Portable navigation devices

BLOCK DIAGRAM

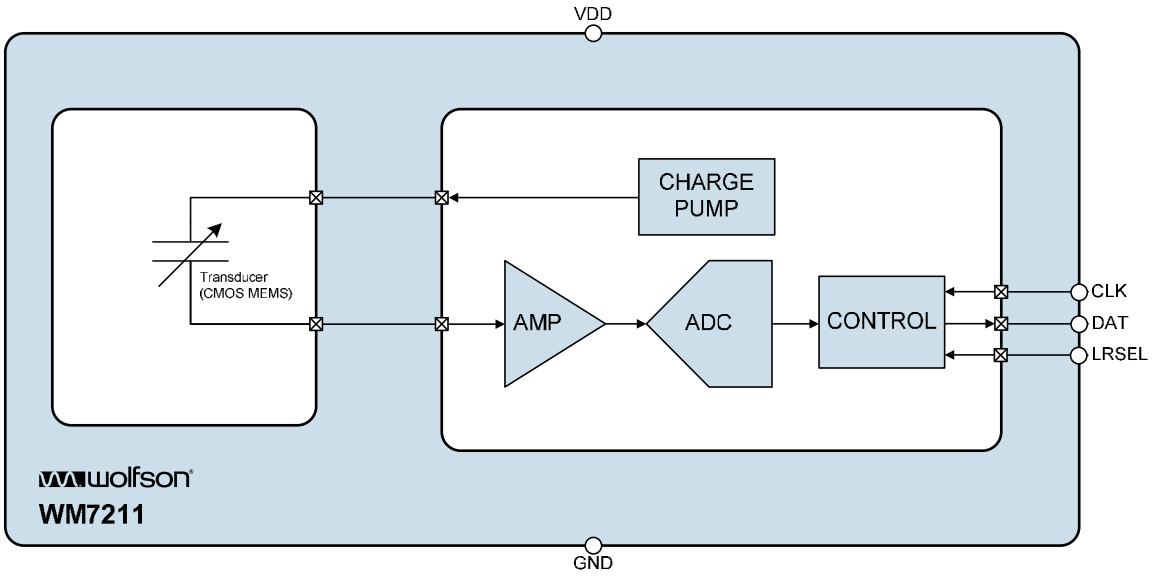

Copyright ©2014 Wolfson Microelectronics plc

TABLE OF CONTENTS

DESCRIPTION **1**
FEATURES **1**
APPLICATIONS **1**
BLOCK DIAGRAM **1**
TABLE OF CONTENTS **2**
PIN CONFIGURATION **3**
PIN DESCRIPTION **3**
ORDERING INFORMATION **3**
ABSOLUTE MAXIMUM RATINGS **4**
IMPORTANT ASSEMBLY GUIDELINES **4**
RECOMMENDED OPERATING CONDITIONS **4**
ACOUSTIC AND ELECTRICAL CHARACTERISTICS **5**
TERMINOLOGY 5
AUDIO INTERFACE TIMING 7
TYPICAL PERFORMANCE **8**
FREQUENCY RESPONSE 8
THD RATIO 8
APPLICATIONS INFORMATION **9**
RECOMMENDED EXTERNAL COMPONENTS 9
OPTIMISED SYSTEM RF DESIGN 9
CONNECTION TO A WOLFSON AUDIO CODEC 9
RECOMMENDED PCB LAND PATTERNS 10
PACKAGE DIMENSIONS (LGA) **11**
IMPORTANT NOTICE **12**
ADDRESS: **12**
REVISION HISTORY **13**

PIN CONFIGURATION

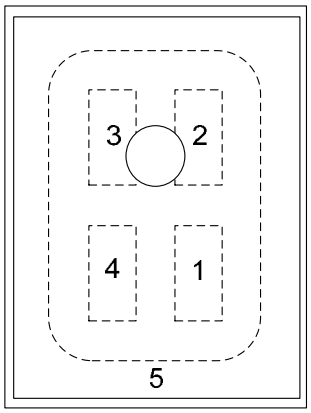

Top View

PIN DESCRIPTION

PIN	NAME	TYPE	DESCRIPTION
1	VDD	Supply	Supply
2	LRSEL	Digital Input	Channel Select 0 = Data output following falling CLK edge 1 = Data output following rising CLK edge
3	CLK	Digital Input	Clock input
4	DAT	Digital Output	PDM Data Output
5	GND	Supply	Ground

ORDERING INFORMATION

DEVICE	DESCRIPTION	TEMPERATURE RANGE	MOISTURE SENSITIVITY LEVEL	PEAK SOLDERING TEMPERATURE
WM7211IMS/RV	Standard (tape and reel)	-40 to +100°C	MSL2A	+260°C
WM7211IMSE/RV	Standard Enhanced (tape and reel)	-40 to +100°C	MSL2A	+260°C

Note:

Reel Quantity = 4800

All devices are Pb-free and Halogen free.

ABSOLUTE MAXIMUM RATINGS

Absolute Maximum Ratings are stress ratings only. Permanent damage to the device may be caused by continuously operating at or beyond these limits. Device functional operating limits and guaranteed performance specifications are given under Electrical Characteristics at the test conditions specified.



ESD Sensitive Device. This device is manufactured on a CMOS process. It is therefore generically susceptible to damage from excessive static voltages. Proper ESD precautions must be taken during handling and storage of this device.

Wolfson tests its package types according to IPC/JEDEC J-STD-020 for Moisture Sensitivity to determine acceptable storage conditions prior to surface mount assembly. These levels are:

MSL1 = unlimited floor life at <30°C / 85% Relative Humidity. Not normally stored in moisture barrier bag.
MSL2 = out of bag storage for 1 year at <30°C / 60% Relative Humidity. Supplied in moisture barrier bag.
MSL2A = out of bag storage for 4 weeks at <30°C / 60% Relative Humidity. Supplied in moisture barrier bag.
MSL3 = out of bag storage for 168 hours at <30°C / 60% Relative Humidity. Supplied in moisture barrier bag.
The Moisture Sensitivity Level for each package type is specified in Ordering Information.

CONDITION	MIN	MAX
Supply Voltage (VDD)	-0.3V	+4.2V
Voltage range digital inputs (LRSEL and CLK)	GND-0.3V	VDD+0.3V
Operating temperature range, T_A	-40ºC	+100ºC
Storage temperature prior to soldering	30°C max / 60% RH max	
Storage temperature after soldering	-40ºC	+100ºC

IMPORTANT ASSEMBLY GUIDELINES

Do not put a vacuum over the port hole of the microphone. Placing a vacuum over the port hole can damage the device. For information on recommended pick and place vacuum point, refer to the package dimension drawing.

Do not board wash the microphone after a re-flow process. Board washing and the associated cleaning agents can damage the device. Do not expose to ultrasonic cleaning methods.

Do not use vapour phase re-flow process. The vapour can damage the device.

Please refer to application note WAN0273 (MEMS MIC Assembly and Handling Guidelines) for further assembly and handling guidelines.

RECOMMENDED OPERATING CONDITIONS

PARAMETER	SYMBOL	MIN	TYP	MAX	UNIT
Analogue Supply Range	VDD	1.64		3.7	V
Ground	GND		0		V
Clock Frequency	F_{CLK}	1		3.25	MHz

ACOUSTIC AND ELECTRICAL CHARACTERISTICS

Test Conditions: VDD=1.8V, 1kHz test signal, CLK=2.4MHz, T_A = 25°C

PARAMETER	SYMBOL	TEST CONDITIONS	MIN	TYP	MAX	UNIT
Directivity			Omni-directional			
Polarity (see note)		Positive sound pressure	Decreasing density of 1's			
Sensitivity (WM7211)	S	94 dB SPL	-29	-26	-23	dBFS
Sensitivity (WM7211E)	S	94 dB SPL	-27	-26	-25	dBFS
Acoustic Overload		THD < 10%		120		dB SPL
Signal to Noise Ratio	SNR	A-Weighted		61		dB
Total Harmonic Distortion	THD	100dB SPL input		0.1	1	%
Dynamic Range	DR	A-weighted noise floor to 1% THD		84		dB
Frequency response		+3dB High frequency		17000		Hz
Acoustic Noise Floor		A-weighted		33		dB SPL
Electrical Noise Floor		A-weighted		-87		dBFS
Power Supply Rejection	PSR	217Hz Square Wave 100mV pk-pk		-75		dBFS
Digital Input / Output						
CLK Input HIGH Level	V_{IH}		0.65 x VDD			V
CLK Input LOW Level	V_{IL}				0.35 x VDD	V
DAT Output HIGH Level	V_{OH}	I_{OH} = +1mA	0.9 x VDD			V
DAT Output LOW Level	V_{OL}	I_{OL} = -1mA			0.1 x VDD	V
Input capacitance (CLK)	C_{IN}			0.5		pF
Maximum load capacitance (DAT)	C_{LOAD}				100	pF
Input Leakage					1	µA
Short Circuit Output Current	I_{SC}	DAT connected to GND			10	mA
Miscellaneous						
Current Consumption	I_{VDD}	Active Mode		735		µA
		SLEEP Mode		2	10	
Start-up Time		From OFF		10		ms
		From SLEEP		10		
CLK Sleep Frequency					1.0	kHz

Note: The WM7211 generates a single-bit digital (PDM) output in response to the acoustic input. A positive sound pressure on the diaphragm generates a decreasing density of 1's in the PDM stream (i.e. there is a phase inversion between the acoustic input and the digital output.)

TERMINOLOGY

1. Sensitivity (dBFS) – Sensitivity is a measure of the microphone output response to the acoustic pressure of a 1kHz 94dB SPL (1Pa RMS) sine wave. This is referenced to the output Full Scale Range (FSR) of the microphone.
2. Full Scale Range (FSR) - Sensitivity, Electrical Noise Floor and Power Supply Rejection are measured with reference to the output Full Scale Range (FSR) of the microphone. FSR is defined as the amplitude of a 1kHz sine wave output whose positive peak value reaches 100% density of logic 1s and whose negative peak value reaches 0% density of logic 1s. This is the largest undistorted 1kHz sine wave that will fit in the digital output numerical range. Note that, because the definition of FSR is based on a sine wave, it is possible to support a square wave test signal output whose level is +3dBFS.
3. Signal-to-Noise Ratio (dB) – SNR is a measure of the difference in level between the output response of a 1kHz 94dB SPL sine wave and the idle noise output.
4. Total Harmonic Distortion (%) – THD is the ratio of the RMS sum of the harmonic distortion products in the specified bandwidth (see note below) relative to the RMS amplitude of the fundamental (ie. test frequency) output.
5. Dynamic Range (dB) – DR is the ratio of the 1% THD microphone output level (in response to a sine wave input) and the idle noise output level. Parameter validated in electroacoustic laboratory and not guaranteed.
6. All performance measurements are carried out with 20kHz low pass 'brick-wall' filter and, where noted, an A-weighted filter. Failure to use these filters will result in higher THD and lower SNR values than are found in the Acoustic and Electrical Characteristics. The brick wall filter removes out of band noise.
7. SLEEP Mode is enabled when the CLK input is below the CLK Sleep Frequency noted above. This is a power-saving mode. Normal operation resumes automatically when the CLK input is above the CLK Sleep Frequency. Note that the VDD supply is still required in SLEEP mode.

AUDIO INTERFACE TIMING

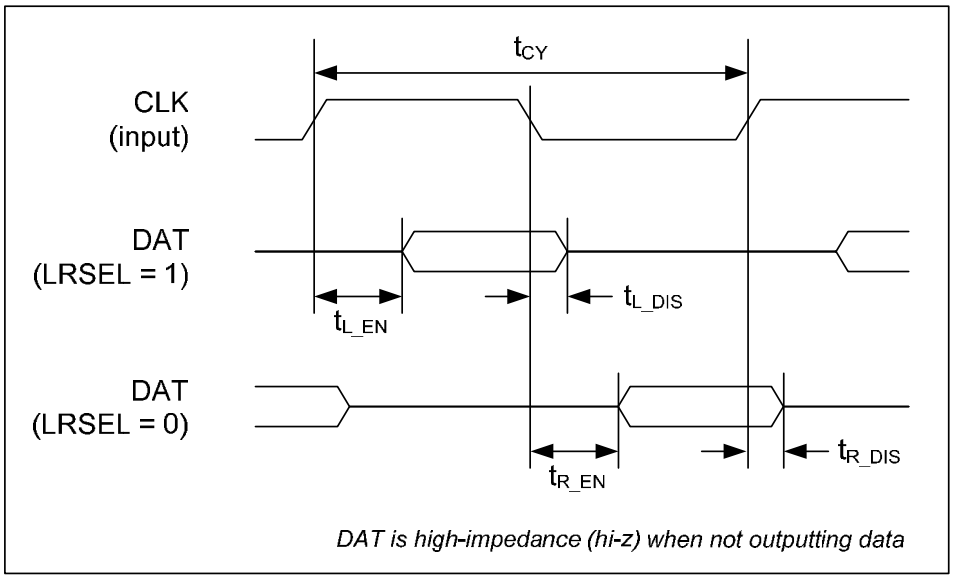

Figure 1 Digital Microphone Interface Timing

Test Conditions

The following timing information is valid across the full range of recommended operating conditions.

PARAMETER	SYMBOL	MIN	TYP	MAX	UNIT
Digital Microphone Interface Timing					
CLK cycle time	t_{CY}	308		1000	ns
CLK duty cycle		60:40		40:60	
DAT enable from rising CLK edge (LRSEL = 1)	t_{L_EN}		18		ns
DAT disable from falling CLK edge (LRSEL = 1)	t_{L_DIS}			16	ns
DAT enable from falling CLK edge (LRSEL = 0)	t_{R_EN}		18		ns
DAT disable from rising CLK edge (LRSEL = 0)	t_{R_DIS}			16	ns

Notes:

1. The DAT output is high-impedance when not outputting data; this enables the outputs of two microphones to be connected together, with the data from one microphone interleaved with the data from the other. (The microphones must be configured to transmit on opposite channels in this case.)

2. In a typical configuration, the Left channel is transmitted following the rising CLK edge (LRSEL = 1). In this case, the Left channel should be sampled by the receiving device on the falling CLK edge,

3. Similarly, the Right channel is typically transmitted following the falling CLK edge (LRSEL = 0). In this case, the Right channel should be sampled by the receiving device on the rising CLK edge.

TYPICAL PERFORMANCE

FREQUENCY RESPONSE

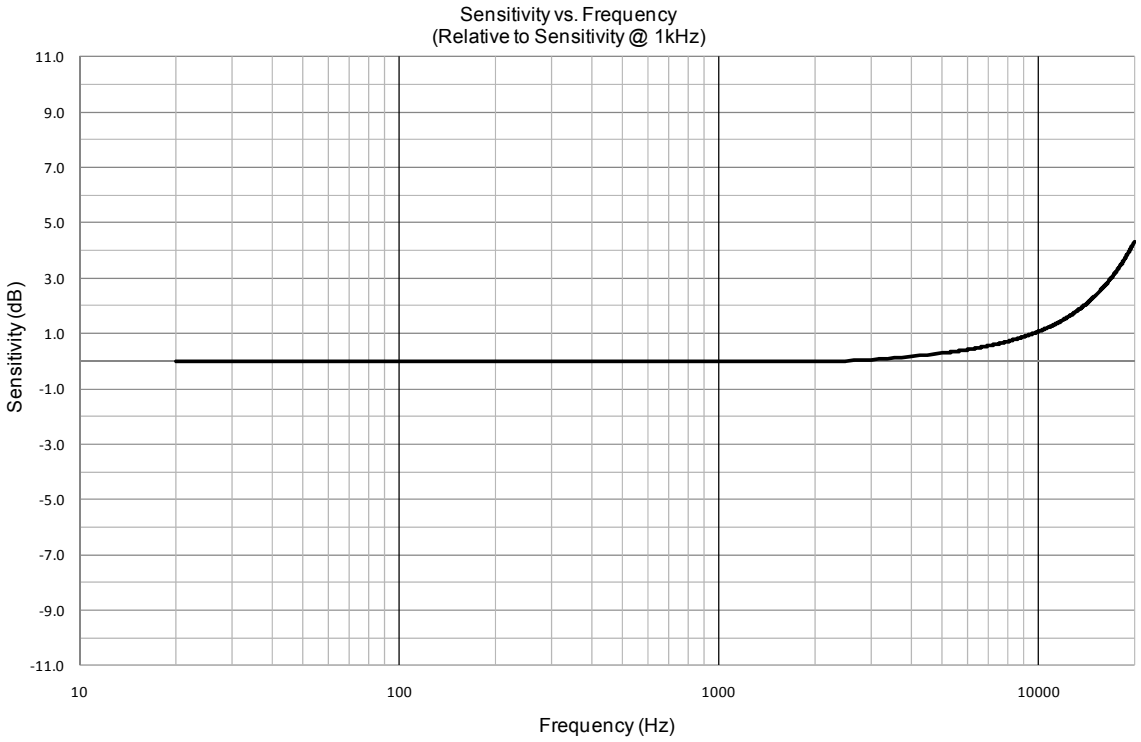

THD RATIO

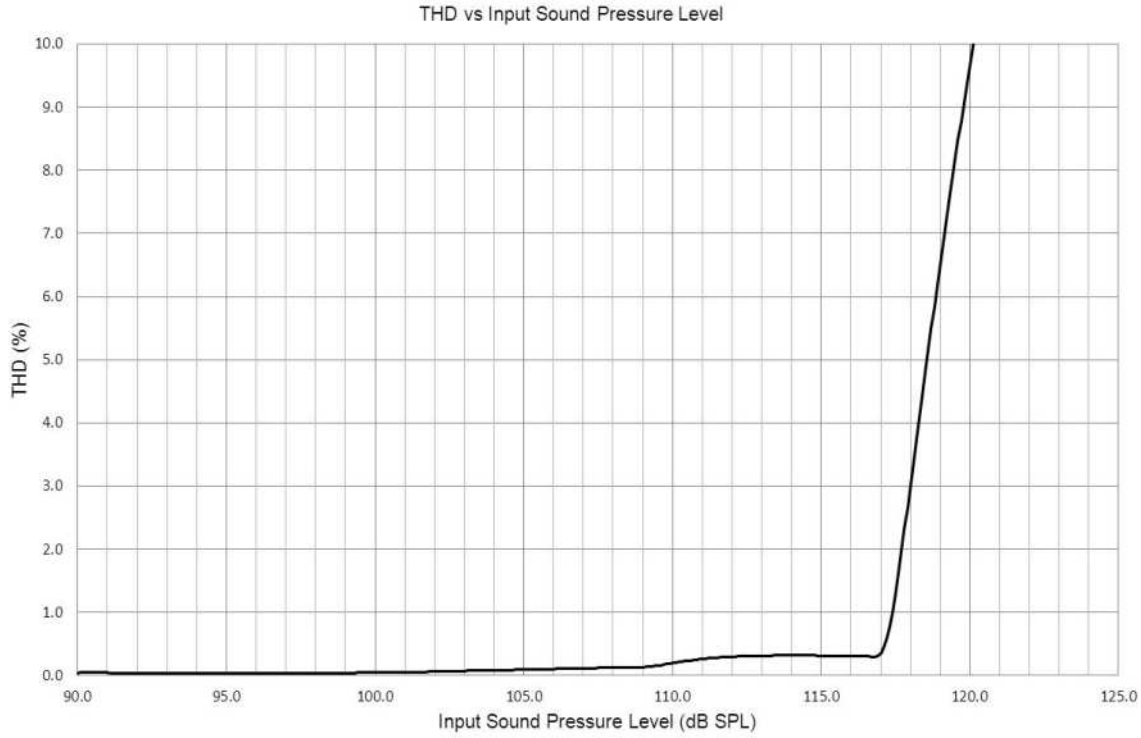

APPLICATIONS INFORMATION

RECOMMENDED EXTERNAL COMPONENTS

It is recommended to connect a 0.1µF decoupling capacitor between the VDD and GND pins of the WM7211. A ceramic 0.1µF capacitor with X7R dielectric or better is suitable. The capacitor should be placed as close to the WM7211 as possible.

OPTIMISED SYSTEM RF DESIGN

For optimised RF design please refer to document WAN0278 (Recommended PCB Layout for Microphone RF Immunity in Mobile Cell Phone Applications) for further information.

.

CONNECTION TO A WOLFSON AUDIO CODEC

Wolfson provides a range of audio CODECs incorporating a digital microphone input interface; these support direct connection to digital microphones such as the WM7211.

Stereo connection of two WM7211 digital microphones to the WM8280 CODEC is illustrated in Figure 2.

A 0.1µF decoupling capacitor is recommended; this should be positioned close to the VDD pin of the WM7211. A ceramic 0.1µF capacitor with X7R dielectric or better is suitable.

Further information on the WM8280 is provided in the product datasheet, which is available from the Wolfson website. The equivalent connections can be made to other Wolfson devices supporting a digital microphone interface.

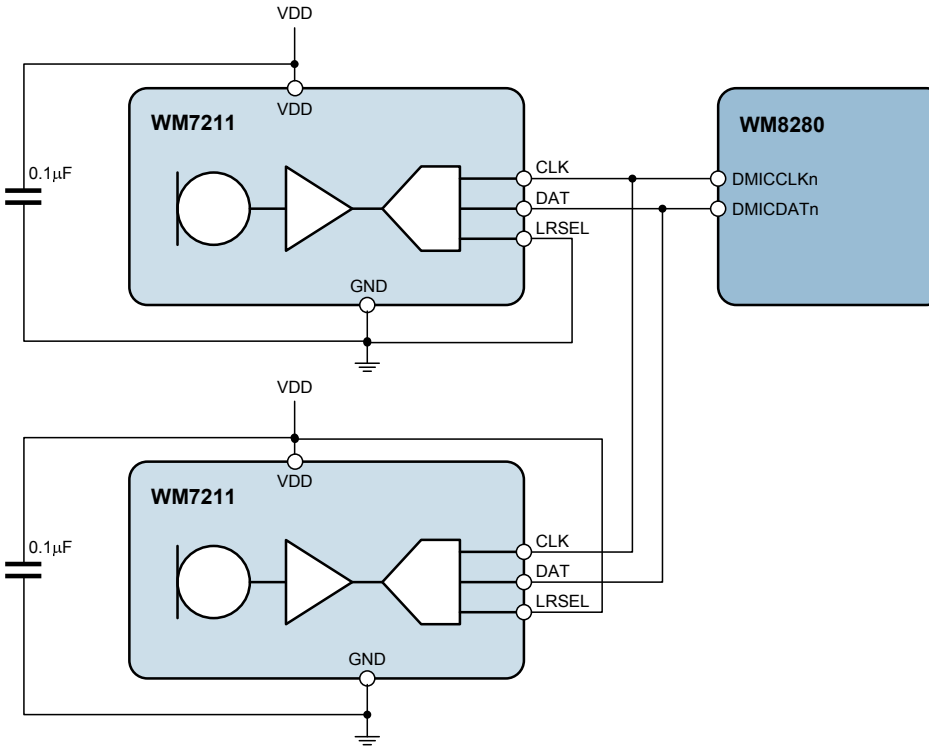

Figure 2 Stereo WM7211 Digital Microphone Connection to WM8280

RECOMMENDED PCB LAND PATTERNS

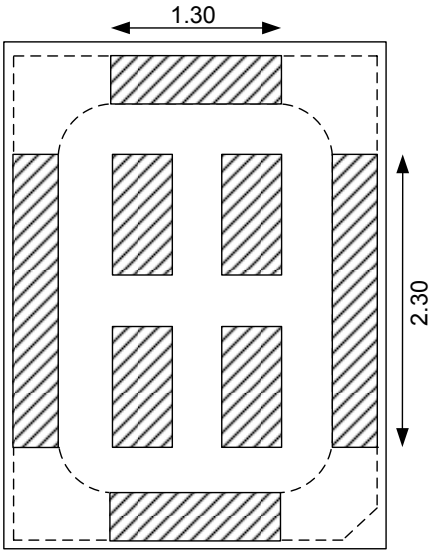

Figure 3 Recommended Customer PCB Land Pattern

(Note that all other dimensions can be obtained from the package dimensions)

PACKAGE DIMENSIONS (LGA)

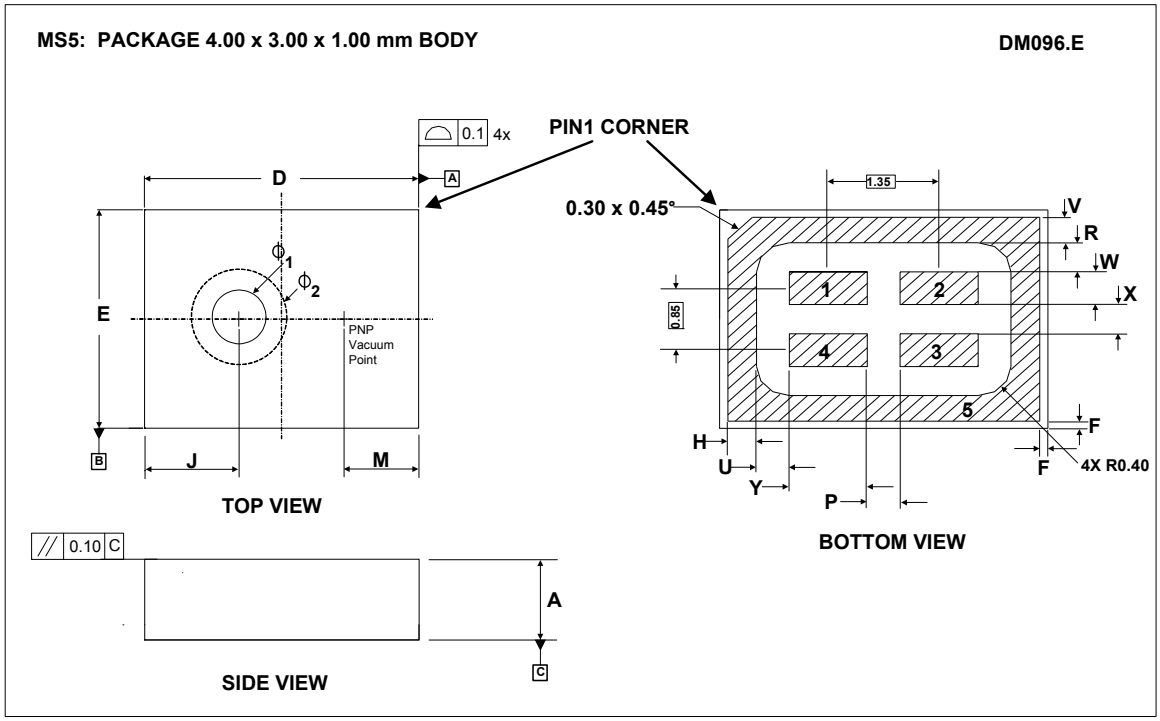

Symbols	Dimensions (mm)			
	MIN	NOM	MAX	NOTE
A	0.90	1.00	1.10	
D	3.90	4.00	4.10	
E	2.90	3.00	3.10	
F	0.05	0.10	0.15	
H	0.30	0.35	0.40	
J	1.45	1.50	1.55	
M		1.10		
P	0.35	0.40	0.45	
R	0.35	0.40	0.45	
U	0.35	0.40	0.45	
V	0.30	0.35	0.40	
W	0.40	0.45	0.50	
X	0.35	0.40	0.45	
Y	0.90	0.95	1.00	
ϕ_1	0.40	0.50	0.60	
ϕ_2		1.26		Gasket Diameter

NOTES:
1. THE SEATING PLANE IS REPRESENTED BY PRIMARY DATUM -C-
2. THE DEVIATION FROM THE SEATING PLANE DUE TO WARPAGE OR TWIST IS SPECIFIED AS MAX 50µm (FLATNESS).
3. LID SHOULD BE PARALLEL TO THE SEATING PLANE ±100µm.
4. INTERPRET DIM AND TOL PER ASME Y14.5M - 1994

IMPORTANT NOTICE

Wolfson Microelectronics plc ("Wolfson") products and services are sold subject to Wolfson's terms and conditions of sale, delivery and payment supplied at the time of order acknowledgement.

Wolfson warrants performance of its products to the specifications in effect at the date of shipment. Wolfson reserves the right to make changes to its products and specifications or to discontinue any product or service without notice. Customers should therefore obtain the latest version of relevant information from Wolfson to verify that the information is current.

Testing and other quality control techniques are utilised to the extent Wolfson deems necessary to support its warranty. Specific testing of all parameters of each device is not necessarily performed unless required by law or regulation.

In order to minimise risks associated with customer applications, the customer must use adequate design and operating safeguards to minimise inherent or procedural hazards. Wolfson is not liable for applications assistance or customer product design. The customer is solely responsible for its selection and use of Wolfson products. Wolfson is not liable for such selection or use nor for use of any circuitry other than circuitry entirely embodied in a Wolfson product.

Wolfson's products are not intended for use in life support systems, appliances, nuclear systems or systems where malfunction can reasonably be expected to result in personal injury, death or severe property or environmental damage. Any use of products by the customer for such purposes is at the customer's own risk.

Wolfson does not grant any licence (express or implied) under any patent right, copyright, mask work right or other intellectual property right of Wolfson covering or relating to any combination, machine, or process in which its products or services might be or are used. Any provision or publication of any third party's products or services does not constitute Wolfson's approval, licence, warranty or endorsement thereof. Any third party trade marks contained in this document belong to the respective third party owner.

Reproduction of information from Wolfson datasheets is permissible only if reproduction is without alteration and is accompanied by all associated copyright, proprietary and other notices (including this notice) and conditions. Wolfson is not liable for any unauthorised alteration of such information or for any reliance placed thereon.

Any representations made, warranties given, and/or liabilities accepted by any person which differ from those contained in this datasheet or in Wolfson's standard terms and conditions of sale, delivery and payment are made, given and/or accepted at that person's own risk. Wolfson is not liable for any such representations, warranties or liabilities or for any reliance placed thereon by any person.

ADDRESS:

Wolfson Microelectronics plc

Westfield House

26 Westfield Road

Edinburgh

EH11 2QB

Tel :: +44 (0)131 272 7000

Fax :: +44 (0)131 272 7001

Email :: sales@wolfsonmicro.com

REVISION HISTORY

DATE	REV	ORIGINATOR	CHANGES
31/01/11	2.0	PF	First Release
18/02/11	2.0	JMacD	Confidential added to headers and footers
26/04/11	2.1	KC	Updated the PSRR, sleep mode, start up time from off Updated frequency response curve and the +3dB point to 17000hz Updated the THD % Updated all the LRSEL description , and figure 1 Added the notes on Updated reel quantity
27/04/11	2.1	JMacD	Current consumption / Active Mode changed to 650 µA
02/05/11	2.2	JMacD	Package Drawing updated.
20/12/11	2.3	KC	Introduced E variant with sensitivity +/-1dB Added E variant ordering info Added voltage range digital input Updated the CODEC to WM8994 Added Reference to WAN_0273
19/01/12	2.3	JMacD	Package Diagram updated to DM096C – formatting updates.
23/08/12	2.4	JMacD	Package Diagram updated to DM096D
16/05/13	2.5	JMacD	Package Diagram updated to DM096E
08/11/13	3.1	JMacD	Product Status updated to Pre Production Updated CODEC reference to WM8280.
18/12/13	3.1	MR	Acoustic and Electrical Characteristics updated: Polarity and Note added.