WM8904

Ultra Low-Power Codec for Portable Audio Applications

DESCRIPTION

The WM8904 is a high performance ultra-low power stereo CODEC optimised for portable audio applications.

The device features stereo ground-referenced headphone amplifiers using the Wolfson 'Class-W' amplifier techniques - incorporating an innovative dual-mode charge pump architecture - to optimise efficiency and power consumption during playback. The ground-referenced headphone and line outputs eliminate AC coupling capacitors, and both outputs include common mode feedback paths to reject ground noise.

Control sequences for audio path setup can be pre-loaded and executed by an integrated control write sequencer to reduce software driver development and minimise pops and clicks via SilentSwitch™ technology.

The analogue input stage can be configured for single ended or differential inputs. Up to 3 stereo microphone or line inputs may be connected. The input impedance is constant with PGA gain setting.

A stereo digital microphone interface is provided, with a choice of two inputs.

A dynamic range controller provides compression and level control to support a wide range of portable recording applications. Anti-clip and quick release features offer good performance in the presence of loud impulsive noises.

ReTune™ Mobile 5-band parametric equaliser with fully programmable coefficients is integrated for optimization of speaker characteristics. Programmable dynamic range control is also available for maximizing loudness, protecting speakers from clipping and preventing premature shutdown due to battery droop.

Common audio sampling frequencies are supported from a wide range of external clocks, either directly or generated via the FLL.

The WM8904 can operate directly from a single 1.8V switched supply. For optimal power consumption, the digital core can be operated from a 1.0V supply.

FEATURES

- 3.0mW quiescent power consumption for DAC to headphone playback
- DAC SNR 96dB typical, THD -86dB typical
- ADC SNR 91dB typical, THD -80dB typical

- 2.4mW quiescent power consumption for analogue bypass playback

- Control write sequencer for pop minimised start-up and shutdown
- Single register write for default start-up sequence

- Integrated FLL provides all necessary clocks
  - Self-clocking modes allow processor to sleep
  - All standard sample rates from 8kHz to 96kHz

- Stereo digital microphone input
- 3 single ended inputs per stereo channel
- 1 fully differential mic / line input per stereo channel

- Digital Dynamic Range Controller (compressor / limiter)
- Digital sidetone mixing

- Ground-referenced headphone driver
- Ground-referenced line outputs

- 32-pin QFN package (4 x 4mm, 0.4mm pitch)
- 36-ball WLCSP package (2.6 x 2.5mm, 6 x 6 ball grid, 0.4mm pitch)

APPLICATIONS

- Portable multimedia players
- Multimedia handsets
- Handheld gaming
- Wireless headsets
- Mobile internet devices
- Netbooks

Copyright © Cirrus Logic, Inc., 2009–2016
(All Rights Reserved)

BLOCK DIAGRAM

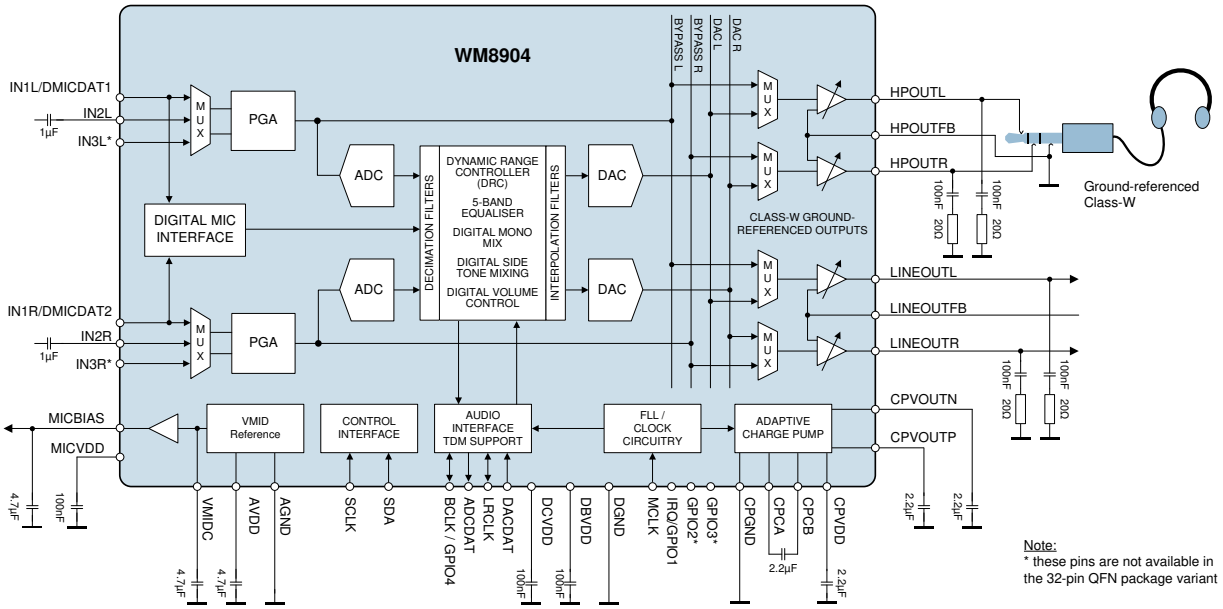

TABLE OF CONTENTS

DESCRIPTION 1
FEATURES 1
APPLICATIONS 1
BLOCK DIAGRAM 2
TABLE OF CONTENTS 3
AUDIO SIGNAL PATHS DIAGRAM 6
PIN CONFIGURATION 7
ORDERING INFORMATION 8
PIN DESCRIPTION 9
ABSOLUTE MAXIMUM RATINGS 10
RECOMMENDED OPERATING CONDITIONS 10
ELECTRICAL CHARACTERISTICS 11
TERMINOLOGY 11
COMMON TEST CONDITIONS 11
INPUT SIGNAL PATH 12
OUTPUT SIGNAL PATH 16
BYPASS PATH 18
CHARGE PUMP 18
FLL 18
OTHER PARAMETERS 19
POWER CONSUMPTION 21
COMMON TEST CONDITIONS 21
POWER CONSUMPTION MEASUREMENTS 21
SIGNAL TIMING REQUIREMENTS 25
COMMON TEST CONDITIONS 25
MASTER CLOCK 25
AUDIO INTERFACE TIMING 26
MASTER MODE 26
SLAVE MODE 27
TDM MODE 28
CONTROL INTERFACE TIMING 29
DIGITAL FILTER CHARACTERISTICS 30
ADC FILTER RESPONSES 31
ADC HIGH PASS FILTER RESPONSES 31
DAC FILTER RESPONSES 32
DE-EMPHASIS FILTER RESPONSES 33
DEVICE DESCRIPTION 34
INTRODUCTION 34
ANALOGUE INPUT SIGNAL PATH 35
INPUT PGA ENABLE 36
INPUT PGA CONFIGURATION 36
SINGLE-ENDED INPUT 38
DIFFERENTIAL LINE INPUT 38
DIFFERENTIAL MICROPHONE INPUT 39
INPUT PGA GAIN CONTROL 39
INPUT PGA COMMON MODE AMPLIFIER 41
ELECTRET CONDENSER MICROPHONE INTERFACE 42
MICBIAS CONTROL 42

MICBIAS CURRENT DETECT 43
MICBIAS CURRENT DETECT FILTERING 43
MICROPHONE HOOK SWITCH DETECTION 45
DIGITAL MICROPHONE INTERFACE 46
ANALOGUE-TO-DIGITAL CONVERTER (ADC) 47
ADC DIGITAL VOLUME CONTROL 48
HIGH PASS FILTER 50
ADC OVERSAMPLING RATIO (OSR) 51
DYNAMIC RANGE CONTROL (DRC) 51
COMPRESSION/LIMITING CAPABILITIES 52
GAIN LIMITS 53
DYNAMIC CHARACTERISTICS 54
ANTI-CLIP CONTROL 54
QUICK RELEASE CONTROL 55
GAIN SMOOTHING 56
INITIALISATION 56
RETUNE™ MOBILE PARAMETRIC EQUALIZER (EQ) 57
DEFAULT MODE (5-BAND PARAMETRIC EQ) 57
RETUNE™ MOBILE MODE 58
EQ FILTER CHARACTERISTICS 58
DIGITAL MIXING 60
DIGITAL MIXING PATHS 60
DAC INTERFACE VOLUME BOOST 62
DIGITAL SIDETONE 62
DIGITAL-TO-ANALOGUE CONVERTER (DAC) 64
DAC DIGITAL VOLUME CONTROL 64
DAC SOFT MUTE AND SOFT UN-MUTE 66
DAC MONO MIX 67
DAC DE-EMPHASIS 67
DAC SLOPING STOPBAND FILTER 68
DAC OVERSAMPLING RATIO (OSR) 68
OUTPUT SIGNAL PATH 69
OUTPUT SIGNAL PATHS ENABLE 70
HEADPHONE / LINE OUTPUT SIGNAL PATHS ENABLE 70
OUTPUT MUX CONTROL 73
OUTPUT VOLUME CONTROL 74
ANALOGUE OUTPUTS 76
HEADPHONE OUTPUTS – HPOUTL AND HPOUTR 76
LINE OUTPUTS – LINEOUTL AND LINEOUTR 76
EXTERNAL COMPONENTS FOR GROUND REFERENCED OUTPUTS 77
REFERENCE VOLTAGES AND MASTER BIAS 77
ANALOGUE REFERENCE AND MASTER BIAS 77
LOW POWER PLAYBACK MODE 79
POP SUPPRESSION CONTROL 80
DISABLED INPUT CONTROL 80
CHARGE PUMP 80
DC SERVO 82
DC SERVO ENABLE AND START-UP 82
DC SERVO ACTIVE MODES 85
DC SERVO READBACK 87
DIGITAL AUDIO INTERFACE 87
MASTER AND SLAVE MODE OPERATION 87
OPERATION WITH TDM 88
BCLK FREQUENCY 89
AUDIO DATA FORMATS (NORMAL MODE) 89

AUDIO DATA FORMATS (TDM MODE) 91
DIGITAL AUDIO INTERFACE CONTROL 93
AUDIO INTERFACE OUTPUT TRI-STATE 94
BCLK AND LRCLK CONTROL 94
COMPANDING 95
LOOPBACK 97
DIGITAL PULL-UP AND PULL-DOWN 97
CLOCKING AND SAMPLE RATES 98
SYSCLK CONTROL 100
CONTROL INTERFACE CLOCKING 100
CLOCKING CONFIGURATION 101
ADC / DAC CLOCK CONTROL 102
OPCLK CONTROL 102
TOCLK CONTROL 103
ADC / DAC OPERATION AT 88.2K / 96K 103
FREQUENCY LOCKED LOOP (FLL) 104
FREE-RUNNING FLL CLOCK 109
GPIO OUTPUTS FROM FLL 109
EXAMPLE FLL CALCULATION 110
EXAMPLE FLL SETTINGS 111
GENERAL PURPOSE INPUT/OUTPUT (GPIO) 112
IRQ/GPIO1 112
GPIO2 113
GPIO3 113
BCLK/GPIO4 114
INTERRUPTS 115
USING IN1L AND IN1R AS INTERRUPT INPUTS 119
CONTROL INTERFACE 120
CONTROL WRITE SEQUENCER 122
INITIATING A SEQUENCE 122
PROGRAMMING A SEQUENCE 123
DEFAULT SEQUENCES 126
START-UP SEQUENCE 126
SHUTDOWN SEQUENCE 128
POWER-ON RESET 129
QUICK START-UP AND SHUTDOWN 131
QUICK START-UP (DEFAULT SEQUENCE) 131
FAST START-UP FROM STANDBY 132
QUICK SHUTDOWN (DEFAULT SEQUENCE) 133
SOFTWARE RESET AND CHIP ID 133
REGISTER MAP 134
REGISTER BITS BY ADDRESS 138
APPLICATIONS INFORMATION 177
RECOMMENDED EXTERNAL COMPONENTS 177
MIC DETECTION SEQUENCE USING MICBIAS CURRENT 179
PACKAGE DIMENSIONS 181
IMPORTANT NOTICE 183
REVISION HISTORY 184

AUDIO SIGNAL PATHS DIAGRAM

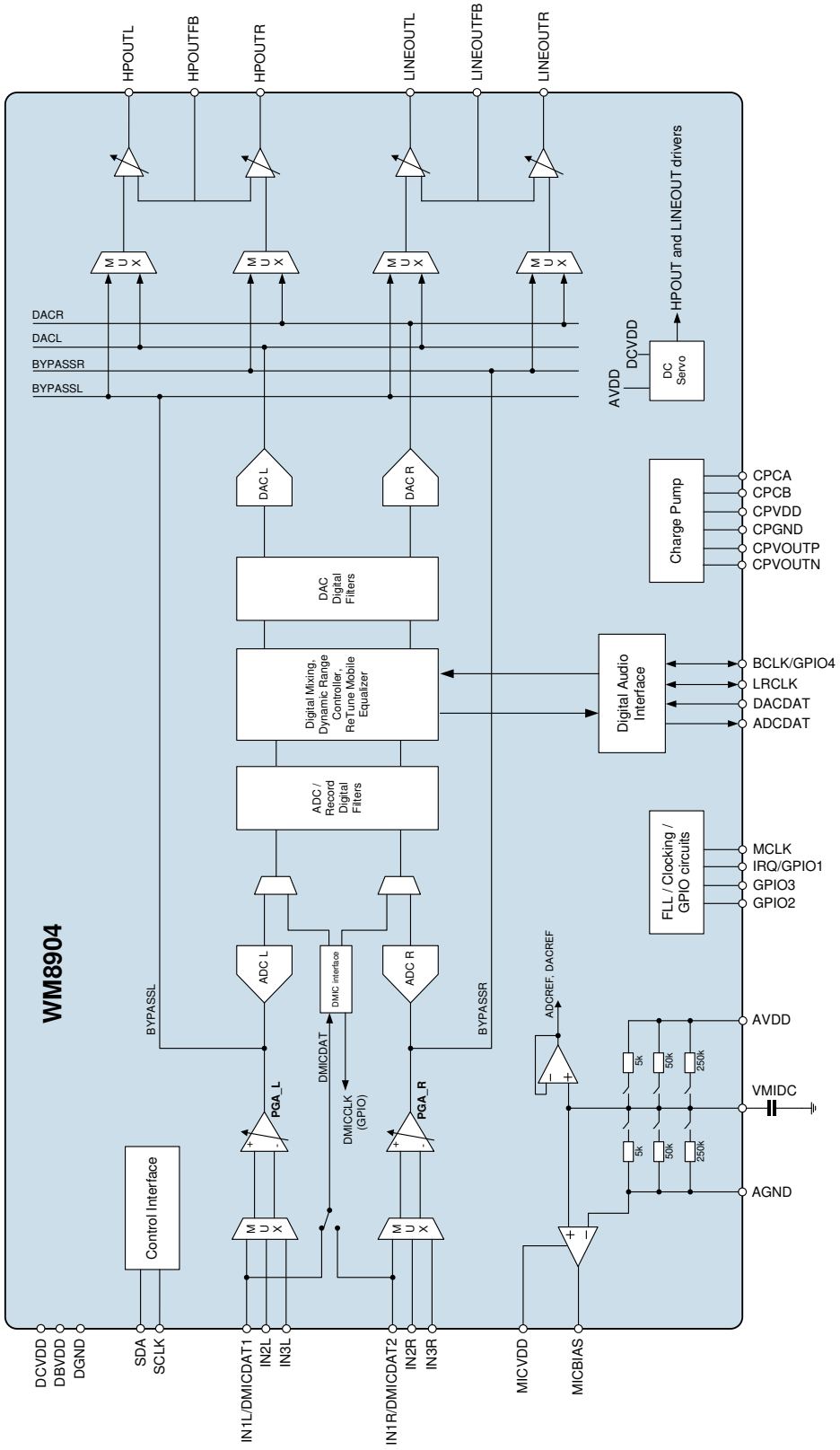

PIN CONFIGURATION

The WM8904 is supplied in a 32-pin QFN package or in a 36-ball CSP format.

The diagram below shows the 32-pin QFN configuration.

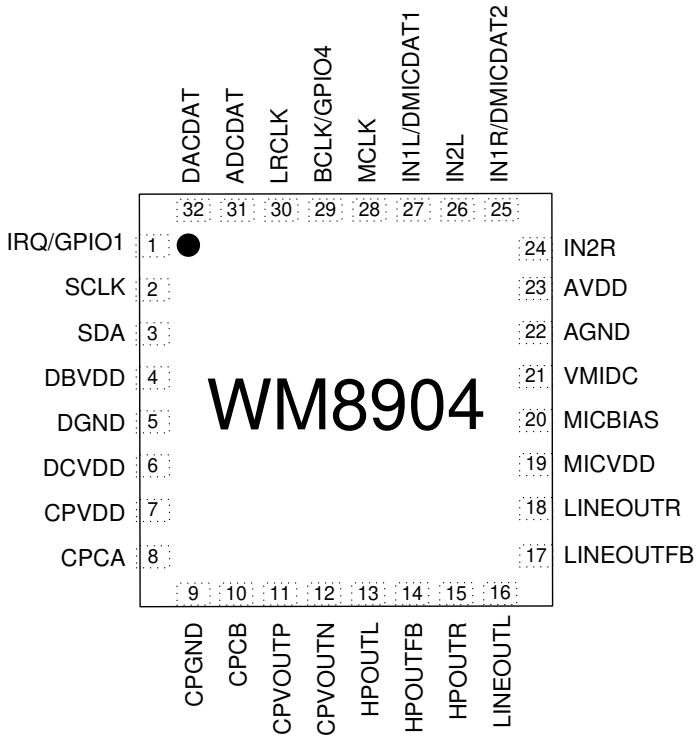

The following diagram shows the 36-ball CSP configuration.

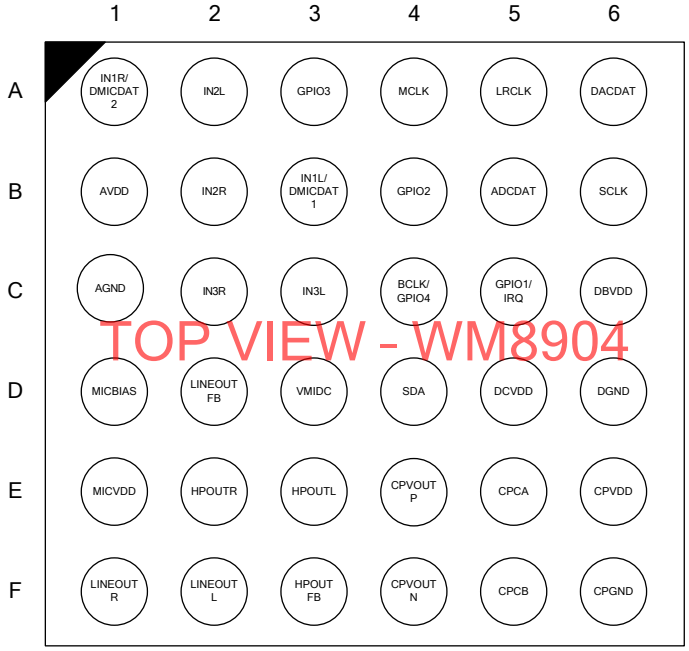

ORDERING INFORMATION

DEVICE	TEMPERATURE RANGE	PACKAGE	MOISTURE SENSITIVITY LEVEL	PEAK SOLDERING TEMPERATURE
WM8904CGEFL/V	-40°C to +85°C	32-lead QFN (4 x 4 x 0.75mm, 0.4mm pitch, lead-free)	MSL3	260°C
WM8904CGEFL/RV	-40°C to +85°C	32-lead QFN (4 x 4 x 0.75mm, 0.4mm pitch, lead-free, tape and reel)	MSL3	260°C
WM8904ECS/R	-40°C to +85°C	36-ball W-CSP (2.6 x 2.5 x 0.5mm, 6 x 6 ball grid, 0.4mm pitch, lead-free, tape and reel)	MSL1	260°C

Note:

QFN Reel quantity = 3,500

W-CSP Reel quantity = 3,500

PIN DESCRIPTION

NAME	WLCSP 6×6	QFN-32	TYPE	DESCRIPTION
IN1L / DMICDAT1	B3	27	Analogue / Digital Input	Left channel input 1 / Digital microphone data input 1
IN2L	A2	26	Analogue Input	Left channel input 2
IN3L	C3	n/a	Analogue Input	Left channel input 3
IN1R / DMICDAT2	A1	25	Analogue / Digital Input	Right channel input 1 / Digital microphone data input 2
IN2R	B2	24	Analogue Input	Right channel input 2
IN3R	C2	n/a	Analogue Input	Right channel input 3
MICBIAS	D1	20	Analogue Output	Microphone bias
MICVDD	E1	19	Supply	Microphone bias amp supply
HPOUTL	E3	13	Analogue Output	Left headphone output (line or headphone output)
HPOUTR	E2	15	Analogue Output	Right headphone output (line or headphone output)
HPOUTFB	F3	14	Analogue Input	Headphone output ground loop noise rejection feedback
LINEOUTL	F2	16	Analogue Output	Left line output 1 (line output)
LINEOUTR	F1	18	Analogue Output	Right line output 1 (line output)
LINEOUTFB	D2	17	Analogue Input	Line output ground loop noise rejection feedback
CPVDD	E6	7	Supply	Charge pump power supply
CPGND	F6	9	Supply	Charge pump ground
CPCA	E5	8	Analogue Output	Charge pump flyback capacitor pin
CPCB	F5	10	Analogue Output	Charge pump flyback capacitor pin
CPVOUTP	E4	11	Analogue Output	Charge pump positive supply decoupling (powers HPOUTL/R, LINEOUTL/R)
CPVOUTN	F4	12	Analogue Output	Charge pump negative supply decoupling (powers HPOUTL/R, LINEOUTL/R)
AVDD	B1	23	Supply	Analogue power supply (powers analogue inputs, reference, ADC, DAC)
AGND	C1	22	Supply	Analogue power return
VMIDC	D3	21		Midrail voltage decoupling capacitor
DCVDD	D5	6	Supply	Digital core supply
DBVDD	C6	4	Supply	Digital buffer supply (powers audio interface and control interface)
DGND	D6	5	Supply	Digital ground (return path for DCVDD and DBVDD)
MCLK	A4	28	Digital Input	Master clock for CODEC
BCLK / GPIO4	C4	29	Digital Input / Output	Audio interface bit clock / GPIO4
LRCLK	A5	30	Digital Input / Output	Audio interface left / right clock (common for ADC and DAC)
DACDAT	A6	32	Digital Input	DAC digital audio data
ADCDAT	B5	31	Digital Output	ADC digital audio data
SCLK	B6	2	Digital Input	Control interface clock input
SDA	D4	3	Digital Input / Output	Control interface data input / output
GPIO1 / IRQ	C5	1	Digital Input / Output	GPIO1 / Interrupt
GPIO2	B4	n/a	Digital Input / Output	GPIO2
GPIO3	A3	n/a	Digital Input / Output	GPIO3
GND_PADDLE	n/a	33		Die Paddle

Note:

1. It is recommended that the QFN ground paddle is connected to analogue ground on the application PCB.

ABSOLUTE MAXIMUM RATINGS

Absolute Maximum Ratings are stress ratings only. Permanent damage to the device may be caused by continuously operating at or beyond these limits. Device functional operating limits and guaranteed performance specifications are given under Electrical Characteristics at the test conditions specified.

ESD Sensitive Device. This device is manufactured on a CMOS process. It is therefore generically susceptible to damage from excessive static voltages. Proper ESD precautions must be taken during handling and storage of this device.

Cirrus Logic tests its package types according to IPC/JEDEC J-STD-020B for Moisture Sensitivity to determine acceptable storage conditions prior to surface mount assembly. These levels are:

MSL1 = unlimited floor life at <30°C / 85% Relative Humidity. Not normally stored in moisture barrier bag.
MSL2 = out of bag storage for 1 year at <30°C / 60% Relative Humidity. Supplied in moisture barrier bag.
MSL3 = out of bag storage for 168 hours at <30°C / 60% Relative Humidity. Supplied in moisture barrier bag.

The Moisture Sensitivity Level for each package type is specified in Ordering Information.

CONDITION	MIN	MAX
AVDD, DCVDD	-0.3V	+2.5V
DBVDD,	-0.3V	+4.5V
MICVDD	-0.3V	+4.5V
CPVDD	-0.3V	+2.2V
HPOUTL, HPOUTR, LINEOUTL, LINEOUTR	(CPVDD + 0.3V) * -1	CPVDD + 0.3V
Voltage range digital inputs	DGND -0.3V	DBVDD +0.3V
Voltage range analogue inputs	AGND -0.3V	AVDD +0.3V
Temperature range, T_A	-40°C	+85°C
Storage temperature after soldering	-65°C	+150°C

Notes:

1. Analogue and digital grounds must always be within 0.3V of each other.
2. All digital and analogue supplies are completely independent from each other; there is no restriction on power supply sequencing.
3. HPOUTL, HPOUTR, LINEOUTL, LINEOUTR are outputs, and should not normally become connected to DC levels. However, if the limits above are exceeded, then damage to the WM8904 may occur.

RECOMMENDED OPERATING CONDITIONS

PARAMETER	SYMBOL	MIN	TYP	MAX	UNIT
Digital supply range (Core)	DCVDD	0.95	1.0	1.98	V
Digital supply range (Buffer)	DBVDD	1.42	1.8	3.6	V
Analogue supplies range	AVDD	1.71	1.8	2.0	V
Charge pump supply range	CPVDD	1.71	1.8	2.0	V
Microphone bias	MICVDD	1.71	2.5	3.6	V
Ground	DGND, AGND, CPGND		0		V
Operating Temperature (ambient)	T_A	-40	+25	+85	°C

ELECTRICAL CHARACTERISTICS

TERMINOLOGY

1. Signal-to-Noise Ratio (dB) – SNR is the difference in level between a full scale output signal and the device output noise with no signal applied, measured over a bandwidth of 20Hz to 20kHz. This ratio is also called idle channel noise. (No Auto-zero or Automute function is employed).
2. Total Harmonic Distortion (dB) – THD is the difference in level between a 1kHz full scale sinewave output signal and the first seven harmonics of the output signal. The amplitude of the fundamental frequency of the output signal is compared to the RMS value of the next seven harmonics and expressed as a ratio.
3. Total Harmonic Distortion + Noise (dB) – THD+N is the difference in level between a 1kHz full scale sine wave output signal and all noise and distortion products in the audio band. The amplitude of the fundamental reference frequency of the output signal is compared to the RMS value of all other noise and distortion products and expressed as a ratio.
4. Channel Separation (dB) – is a measure of the coupling between left and right channels. A full scale signal is applied to the left channel only, the right channel amplitude is measured. Then a full scale signal is applied to the right channel only and the left channel amplitude is measured. The worst case channel separation is quoted as a ratio.
5. Multi-Path Crosstalk (dB) – is the measured signal level in the idle path at the test signal frequency relative to the signal level at the output of the active path. The active path is configured and supplied with an appropriate input signal to drive a full scale output, with signal measured at the output of the specified idle path.
6. Channel Level Matching (dB) – measures the difference in gain between the left and the right channels.
7. Power Supply Rejection Ratio (dB) – PSRR is a measure of ripple attenuation between the power supply pin and an output path. With the signal path idle, a small signal sine wave is summed onto the power supply rail, The amplitude of the sine wave is measured at the output port and expressed as a ratio.
8. All performance measurements carried out with 20kHz AES17 low pass filter for distortion measurements, and an A-weighted filter for noise measurement. Failure to use such a filter will result in higher THD and lower SNR and Dynamic Range readings than are found in the Electrical Characteristics. The low pass filter removes out of band noise; although it is not audible it may affect dynamic specification values.

COMMON TEST CONDITIONS

Unless otherwise stated, the following test conditions apply throughout the following sections:

- DCVDD = 1.0V
- DBVDD = 1.8V
- AVDD = CPVDD =1.8V
- Ambient temperature = +25°C
- Audio signal: 1kHz sine wave, sampled at 48kHz with 24-bit data resolution
- SYSCLK_SRC = 0 (system clock comes direct from MCLK, not from FLL).

Additional, specific test conditions are given within the relevant sections below.

INPUT SIGNAL PATH

Single-ended Stereo Line Record - IN1L+IN1R pins to ADC output

Test conditions:

L_MODE = R_MODE = 00b (Single ended)

LIN_VOL = RIN_VOL = 00101b (0dB)

Total signal path gain = 6dB, incorporating 6dB single-ended to differential conversion gain

PARAMETER	SYMBOL	TEST CONDITIONS	MIN	TYP	MAX	UNIT
Full Scale Input Signal Level (for ADC 0dBFS).				0.50 -6 1.41		Vrms dBV Vpk-pk
Input Resistance	R_{in}		9	12		kΩ
Input Capacitance	C_{in}			10		pF
Signal to Noise Ratio	SNR	A-weighted ADC_OSR128 = 0 ADC_128_OSR_TST_MODE = 1 ADC_BIASx1P5 = 1		80		dB
		A-weighted ADC_OSR128 = 1 ADC_128_OSR_TST_MODE = 0 ADC_BIASx1P5 = 0	80	90		
Total Harmonic Distortion + Noise	THD+N	-7dBV input		-78	-66	dB
Channel Separation		1kHz signal, -7dBV		85		dB
		10kHz signal, -7dBV		80		
Channel Level Matching		1kHz signal, -7dBV		+/-1		dB
Power Supply Rejection Ratio	PSRR	217Hz, 100mVpk-pk		45		dB
		1kHz, 100mV pk-pk		55		

Differential Stereo Line Record - IN2L+IN3L / IN2R+IN3R pins to ADC output

Test conditions:

L_MODE = R_MODE = 01b (Differential Line)

LIN_VOL = RIN_VOL = 00101b (0dB)

Total signal path gain = 0dB

PARAMETER	SYMBOL	TEST CONDITIONS	MIN	TYP	MAX	UNIT
Line Input Full Scale Signal Level applied to IN2L or IN2R (for ADC 0dBFS output)				1.00 0 2.83		Vrms dBV Vpk-pk
IN3L, IN3R input range						mV
Input Resistance	R_{in}		9	12		kΩ
Input Capacitance	C_{in}			10		pF
Signal to Noise Ratio	SNR	A-weighted ADC_OSR128 = 0 ADC_128_OSR_TST_MODE = 1 ADC_BIASx1P5 = 1		80		dB
		A-weighted Best performance mode:: ADC_OSR128 = 1 ADC_128_OSR_TST_MODE = 0 ADC_BIASx1P5 = 0	81	91		
Total Harmonic Distortion + Noise	THD+N	-1dBV input		-78	-66	dB
Common Mode Rejection Ratio	CMRR	1kHz, 100mV pk-pk		60		dB
Channel Separation		1kHz signal, -1dBV		85		dB
		10kHz signal, -1dBV		80		
Channel Level Matching		1kHz signal, -1dBV		+/-1		dB
Power Supply Rejection Ratio	PSRR	217Hz, 100mVpk-pk		55		dB
		1kHz, 100mV pk-pk		55		

Single-ended Stereo Record from Analogue Microphones - IN2L / IN2R pins to ADC output

Test conditions:

L_MODE = R_MODE = 00b (Single ended)

LIN_VOL = RIN_VOL = 11111b (+28.3dB)

Total signal path gain = +34.3dB, incorporating 6dB single-ended to differential conversion gain

PARAMETER	SYMBOL	TEST CONDITIONS	MIN	TYP	MAX	UNIT
Single-ended mic input full-scale Signal Level (for ADC 0dBFS output)				0.019 -34.3 0.055		Vrms dBV Vpk-pk
Input Resistance	R_{in}		9	12		kΩ
Input Capacitance	C_{in}			10		pF
Signal to Noise Ratio	SNR	A-weighted ADC_OSR128 = 0 ADC_128_OSR_TST_MODE = 1 ADC_BIASx1P5 = 1		65		dB
		A-weighted Best performance mode:: ADC_OSR128 = 1 ADC_128_OSR_TST_MODE = 0 ADC_BIASx1P5 = 0		73		
Total Harmonic Distortion + Noise	THD+N	-35.3dBV input		-69		dB
Channel Level Matching		1kHz signal, -35.3dBV		+/-3		dB
Power Supply Rejection Ratio	PSRR	217Hz, 100mVpk-pk		45		dB
		1kHz, 100mV pk-pk		55		

Differential Stereo Record from Analogue Microphones - IN1L+IN2L / IN1R+IN2R pins to ADC output

Test conditions:

L_MODE = R_MODE = 10b (Differential mic)

LIN_VOL = RIN_VOL = 00111b (+30dB)

Total signal path gain = +30dB

PARAMETER	SYMBOL	TEST CONDITIONS	MIN	TYP	MAX	UNIT
Differential Mic Input Full Scale Signal Level IN1L-IN2L / IN1R-IN2R (for ADC 0dBFS output)				0.032 -30 0.089		Vrms dBV Vpk-pk
Input Resistance	Rin		100	120		kΩ
Input Capacitance	Cin			10		pF
Signal to Noise Ratio	SNR	A-weighted ADC_OSR128 = 0 ADC_128_OSR_TST_MODE = 1 ADC_BIASx1P5 = 1		68		dB
		A-weighted Best performance mode:: ADC_OSR128 = 1 ADC_128_OSR_TST_MODE = 0 ADC_BIASx1P5 = 0	67	77		
Total Harmonic Distortion + Noise	THD+N	-31dBV input		-75	-65	dB
Common Mode Rejection Ratio	CMRR	1kHz, 100mVpk-pk		60		dB
Channel Separation		1kHz signal, -31dBV		85		dB
		10kHz signal, -31dBV		80		
Channel Level Matching		1kHz signal, -31dBV		+/-1		dB
PSRR (Referred to Input)	PSRR	217Hz, 100mVpk-pk		50		dB
		1kHz, 100mV pk-pk		50		

PGA and Microphone Boost

PARAMETER	TEST CONDITIONS	MIN	TYP	MAX	UNIT
Minimum PGA gain setting	L_MODE/R_MODE= 00b or 01b		-1.55		dB
	L_MODE/R_MODE= 10b		+12		
Maximum PGA gain setting	L_MODE/R_MODE= 00b or 01b		+28.28		dB
	L_MODE/R_MODE= 10b		+30		
Single-ended to differential conversion gain	L_MODE/R_MODE= 00b		+6		dB
PGA gain accuracy	L_MODE/R_MODE= 00b Gain -1.5 to +6.7dB	-1		+1	dB
	L_MODE/R_MODE= 00b Gain +7.5 to +28.3dB	-1.5		+1.5	
	L_MODE/R_MODE= 1X Gain +12 to +24dB	-1		+1	
	L_MODE/R_MODE= 1X Gain +27 to +30dB	-1.5		+1.5	
Mute attenuation	all modes of operation		100		dB
Equivalent input noise	L_MODE/R_MODE= 00b or 01b		30 214		µVrms nV/√Hz

OUTPUT SIGNAL PATH

High Performance Stereo Playback to Headphones - DAC input to HPOUTL+HPOUTR pins with 15Ω load
Test conditions:
HPOUTL_VOL = HPOUTR_VOL = 111001b (0dB)
Low Power Playback mode disabled. (See Table 49 for details; note that Low Power Playback mode is disabled by default.)

PARAMETER	SYMBOL	TEST CONDITIONS	MIN	TYP	MAX	UNIT
Output Power (per Channel)	P_o	1% THD R_{Load}= 30Ω		28 0.92 -0.76		mW Vrms dBV
		1% THD R_{Load}= 15Ω		32 0.69 -3.19		mW Vrms dBV
DC Offset		DC servo enabled, calibration complete.	-1.5		+1.5	mV
Signal to Noise Ratio	SNR	A-weighted	90	96		dB
Total Harmonic Distortion + Noise	THD+N	R_L=30Ω; P_o=2mW		-91		dB
		R_L=30Ω; P_o=20mW		-84		
		R_L=15Ω; P_o=2mW		-87	-80	
		R_L=15Ω; P_o=20mW		-85		
Channel Separation		1kHz signal, 0dBFS		100		dB
		10kHz signal, 0dBFS		90		
Channel Level Matching		1kHz signal, 0dBFS		+/-1		dB
Power Supply Rejection Ratio	PSRR	217Hz, 100mVpk-pk		75		dB
		1kHz, 100mV pk-pk		70		

Low Power Stereo Playback to Headphones - DAC input to HPOUTL+HPOUTR pins with 15Ω load
Test conditions:
HPOUTL_VOL = HPOUTR_VOL = 111001b (0dB)
Low Power Playback Mode enabled (see Table 48 for details)

PARAMETER	SYMBOL	TEST CONDITIONS	MIN	TYP	MAX	UNIT
Output Power (per Channel)	P_o	1% THD R_{Load}= 30Ω		27 0.90 -0.92		mW Vrms dBV
		1% THD R_{Load}= 15Ω		30 0.67 -3.5		mW Vrms dBV
Signal to Noise Ratio	SNR	A-weighted		95		dB
Total Harmonic Distortion + Noise	THD+N	R_L=30Ω; P_o=2mW		-91		dB
		R_L=30Ω; P_o=20mW		-83		
		R_L=15Ω; P_o=2mW		-87		
		R_L=15Ω; P_o=20mW		-80		

High Performance Stereo Playback to Line-out - DAC input to LINEOUTL+LINEOUTR pins with 10kΩ / 50pF load

Test conditions:

LINEOUTL_VOL = LINEOUTR_VOL = 111001b (0dB)

Low Power Playback mode disabled. (See Table 49 for details; note that Low Power Playback mode is disabled by default.)

PARAMETER	SYMBOL	TEST CONDITIONS	MIN	TYP	MAX	UNIT
Full Scale Output Signal Level		DAC 0dBFS output at 0dB volume		1.0 0 2.83		Vrms dBV Vpk-pk
DC offset		DC servo enabled. Calibration complete.	-1.5		+1.5	mV
Signal to Noise Ratio	SNR	A-weighted	90	96		dB
Total Harmonic Distortion + Noise	THD+N	10kΩ load		-85	-70	dB
Channel Separation		1kHz signal, 0dBFS		100		dB
		10kHz signal, 0dBFS		90		
Channel Level Matching		1kHz signal, 0dBFS		+/-1		dB
Power Supply Rejection Ratio	PSRR	217Hz, 100mVpk-pk		62		dB
		1kHz, 100mV pk-pk		62		

Low Power Stereo Playback to Line-out - DAC input to LINEOUTL+LINEOUTR pins with 10kΩ / 50pF load

Test conditions:

LINEOUTL_VOL = LINEOUTR_VOL = 111001b (0dB),

Low Power Playback Mode enabled (see Table 48 for details)

PARAMETER	SYMBOL	TEST CONDITIONS	MIN	TYP	MAX	UNIT
Full Scale Output Signal Level		DAC 0dBFS output at 0dB volume		1.0 0 2.83		Vrms dBV Vpk-pk
Signal to Noise Ratio	SNR	A-weighted		95		dB
Total Harmonic Distortion + Noise	THD+N	10kΩ load		-82		dB

Output PGAs (HP, LINE)

PARAMETER	TEST CONDITIONS	MIN	TYP	MAX	UNIT
Minimum PGA gain setting			-57		dB
Maximum PGA gain setting			6		dB
PGA Gain Step Size			1		dB
PGA gain accuracy	+6dB to -40dB	-1.5		+1.5	dB
PGA gain accuracy	-40dB to -57dB	-1		+1	dB
Mute attenuation	HPOUTL/R		85		dB
	LINEOUTL/R		85		dB

BYPASS PATH

Differential Stereo Line Input to Stereo Line Output- IN2L-IN3L / IN2R-IN3R pins to LINEOUTL+LINEOUTR pins with 10kΩ / 50pF load

Test conditions:

L_MODE = R_MODE = 01b (Differential Line)

LIN_VOL = RIN_VOL = 00101b (0dB)

LINEOUTL_VOL = LINEOUTR_VOL = 111001b (0dB)

Total signal path gain = 0dB

PARAMETER	SYMBOL	TEST CONDITIONS	MIN	TYP	MAX	UNIT
Full Scale Output Signal Level				1.0 0 2.83		Vrms dBV Vpk-pk
Signal to Noise Ratio	SNR	A-weighted	90	100		dBV
Total Harmonic Distortion + Noise	THD+N	-1dBV input		-92	-85	dBV
Channel Separation		1kHz signal, -1dBV		90		dB
		10kHz signal, -1dBV		80		
Channel Level Matching		1kHz signal, -1dBV		+/-1		dB
Power Supply Rejection Ratio	PSRR	217Hz, 100mV pk-pk		45		dB

CHARGE PUMP

PARAMETER	TEST CONDITIONS	MIN	TYP	MAX	UNIT
Start-up Time			260		µs
CPCA	Normal mode		CPVDD		V
	Low power mode		CPVDD/2		V
CPCB	Normal mode		-CPVDD		V
	Low power mode		-CPVDD/2		V
External component requirements To achieve specified headphone output power and performance					
Flyback Capacitor (between CPCA and CPCB)	at 2V	1	2.2		µF
CPVOUTN Capacitor	at 2V	2	2.2		µF
CPVOUTP Capacitor	at 2V	2	2.2		µF

FLL

PARAMETER	SYMBOL	TEST CONDITIONS	MIN	TYP	MAX	UNIT
Input Frequency	F_{REF}	FLL_CLK_REF_DIV = 00	0.032		13.5	MHz
		FLL_CLK_REF_DIV = 01	0.064		27	MHz
Lock time				2		ms
Free-running mode start-up time		VMID enabled		100		µs
Free-running mode frequency accuracy		Reference supplied initially		+/-10		%
		No reference provided		+/-30		%

OTHER PARAMETERS

VMID Reference					
PARAMETER	**TEST CONDITIONS**	**MIN**	**TYP**	**MAX**	**UNIT**
Midrail Reference Voltage (VMIDC pin)		-3%	AVDD/2	+3%	V
Charge up time (from fully discharged to 10% below VMID)	External capacitor 4.7µF		890		µs

Microphone Bias (for analogue electret condenser microphones) Additional test conditions: MICBIAS_ENA=1, all parameters measured at the MICBIAS pin						
PARAMETER	**SYMBOL**	**TEST CONDITIONS**	**MIN**	**TYP**	**MAX**	**UNIT**
Bias Voltage. Note: 7/6 and 9/10 are available only if MICVDD > AVDD. Note: 3/2 and 4/3 are available only if MICVDD ≥ 2.5V.	$V_{MICBIAS}$	MICVDD = 2.5V 3mA load current, MICBIAS_SEL = 1xx	-10%	3/2 x AVDD	+10%	V
		MICBIAS_SEL = 011	-10%	4/3 x AVDD	+10%	
		MICBIAS_SEL = 010	-10%	7/6 x AVDD	+10%	
		MICBIAS_SEL = 001	-10%	10/9 x AVDD	+10%	
		MICBIAS_SEL = 000	-10%	9/10 ×AVDD	+10%	
Drop out voltage between MICVDD and MICBIAS				200		mV
Maximum source current	$I_{MICBIAS}$			4		mA
Noise spectral density		At 1kHz		19		nV/√Hz
Power Supply Rejection Ratio MICVDD to MICBIAS	PSRR	1kHz, 100mV pk-pk MICVDD = 1.71 V		67		dB
		20kHz, 100mV pk-pk MICVDD = 1.71 V		76		
		1kHz, 100mV pk-pk MICVDD = 2.5 V		88		
		20kHz, 100mV pk-pk MICVDD = 2.5 V		84		
		1kHz, 100mV pk-pk MICVDD = 3.6 V		61		
		20kHz, 100mV pk-pk MICVDD = 3.6 V		70		
Power Supply Rejection Ratio MICVDD and AVDD to MICBIAS	PSRR	1kHz, 100mV pk-pk AVDD = MICVDD = 1.8 V		54		dB
		20kHz, 100mV pk-pk AVDD = MICVDD = 1.8 V		79		
MICBIAS Current Detect Function (See Note 1)						
Current Detect Threshold (Microphone insertion)		MICDET_THR = 00			80	µA
Current Detect Threshold (Microphone removal)			60			
Delay Time for Current Detect Interrupt	t_{DET}			3.2		ms
MICBIAS Short Circuit (Hook Switch) Detect Function (See Note 1)						
Short Circuit Detect Threshold (Button press)		MICSHORT_THR = 00			600	µA
Short Circuit Detect Threshold (Button release)			400			
Minimum Delay Time for Short Circuit Detect Interrupt	t_{SHORT}			47		ms

Note 1 : If AVDD ≠ 1.8, current threshold values should be multiplied by (AVDD/1.8)

Digital Inputs / Outputs						
PARAMETER	**SYMBOL**	**TEST CONDITIONS**	**MIN**	**TYP**	**MAX**	**UNIT**
Input HIGH Level (Digital Input)	V_{IH}		0.7×DBVDD			V
Input LOW Level (Digital Input)	V_{IL}				0.3×DBVDD	V
Input HIGH Level (Analogue / Digital Input)	V_{IH}		0.7×AVDD			V
Input LOW Level (Analogue / Digital Input)	V_{IL}				0.3×AVDD	V
Output HIGH Level	V_{OH}	I_{OH} = +1mA	0.9×DBVDD			V
Output LOW Level	V_{OL}	I_{OL} = -1mA			0.1×DBVDD	V

Multi-Path Crosstalk **Test Conditions:** Input Path = IN1L/IN1R to ADC, 0dB gain Output Path = DAC to HPOUTL/HPOUTR, 0dB gain Fs = 48kHz						
PARAMETER	**SYMBOL**	**TEST CONDITIONS**	**MIN**	**TYP**	**MAX**	**UNIT**
DAC to ADC Crosstalk		1kHz signal, 0dBFS		-45		dB
ADC to DAC Crosstalk		1kHz signal, -7dBV		-60		dB

POWER CONSUMPTION

The WM8904 power consumption is dependent on many parameters. Most significantly, it depends on supply voltages, sample rates, mode of operation, and output loading.

The power consumption on each supply rail varies approximately with the square of the voltage. Power consumption is greater at fast sample rates than at slower ones. When the digital audio interface is operating in Master mode, the DBVDD current is significantly greater than in Slave mode. (Note also that power savings can be made by using MCLK as the BCLK source in Slave mode.) The output load conditions (impedance, capacitance and inductance) can also impact significantly on the device power consumption.

COMMON TEST CONDITIONS

Unless otherwise stated, the following test conditions apply throughout the following sections:

- Ambient temperature = +25°C
- Audio signal = quiescent (zero amplitude)
- Sample rate = 48kHz
- MCLK = 12.288MHz
- Audio interface mode = Slave (LRCLK_DIR=0, BCLK_DIR=0)
- SYSCLK_SRC = 0 (system clock comes direct from MCLK, not from FLL)

Additional, variant test conditions are quoted within the relevant sections below. Where applicable, power dissipated in the headphone or line loads is included.

POWER CONSUMPTION MEASUREMENTS

Single-ended Stereo Line Record - IN1L/R, IN2L/R or IN3L/R pins to ADC output.
Test conditions:
L_MODE = R_MODE = 00b (Single ended)
LIN_VOL = RIN_VOL = 00101 = +0.0 dB
ADC_OSR128 = 0 (64*fs), ADC_128_OSR_TST_MODE = 1, ADC_BIASx1P5 = 1
MICBIAS = disabled

Variant test conditions	AVDD		DCVDD		DBVDD		CPVDD		MICVDD		TOTAL
	V	mA	V	mA	V	mA	V	mA	V	mA	mW
48kHz sample rate	1.80	4.38	1.00	0.80	1.80	0.02	1.80	0.01	1.80	0.01	8.72
8kHz sample rate	1.80	4.25	1.00	0.14	1.80	0.00	1.80	0.01	1.80	0.01	7.81
48kHz -6dBV sine wave	1.80	4.41	1.00	0.80	1.80	0.03	1.80	0.01	1.80	0.01	8.81

Differential Stereo Record from Analogue Microphones - IN1L/R, IN2L/R or IN3L/R pins to ADC out.
Test conditions:
L_MODE = R_MODE = 10b (Differential mic)
LIN_VOL = RIN_VOL = 00111 = +30.0 dB
ADC_OSR128 = 0 (64*fs), ADC_128_OSR_TST_MODE = 1, ADC_BIASx1P5 = 1
MICBIAS_ENA = 1, MICBIAS_SEL = 000, No load connected to MICBIAS

Variant test conditions	AVDD		DCVDD		DBVDD		CPVDD		MICVDD		TOTAL
	V	mA	V	mA	V	mA	V	mA	V	mA	mW
48kHz sample rate	1.80	4.38	1.00	0.80	1.80	0.02	1.80	0.01	1.80	0.01	8.73
8kHz sample rate	1.80	4.25	1.00	0.14	1.80	0.00	1.80	0.01	1.80	0.01	7.81
48kHz -30dBV sine wave	1.80	4.39	1.00	0.81	1.80	0.03	1.80	0.01	1.80	0.01	8.78

High Performance Stereo Playback to Headphones - DAC input to HPOUTL+HPOUTR pins with 30Ω load.

Test conditions:

VMID_RES = 01 (for normal operation)

CP_DYN_PWR = 1 (Class-W, Charge pump controlled by real-time audio level)

Low Power Playback mode disabled. (See Table 49 for details; note that Low Power Playback mode is disabled by default.)

Variant test conditions	AVDD		DCVDD		DBVDD		CPVDD		MICVDD		TOTAL
	V	mA	V	mA	V	mA	V	mA	V	mA	mW
48kHz sample rate	1.80	1.69	1.00	0.76	1.80	0.00	1.80	0.31	2.50	0.01	4.38
8kHz sample rate	1.80	1.69	1.00	0.18	1.80	0.00	1.80	0.31	2.50	0.01	3.80
48kHz, Po = 0.1mW/channel 1kHz sine wave 0dBFS HPOUT_VOL= -25dB DAC_VOL= 0dB	1.80	1.71	1.00	0.77	1.80	0.00	1.80	1.99	2.50	0.01	7.45
48kHz, Po = 1mW/channel 1kHz sine wave 0dBFS HPOUT_VOL= -15dB DAC_VOL= 0dB	1.80	1.73	1.00	0.77	1.80	0.00	1.80	5.61	2.50	0.01	13.99
48kHz sample rate, Master mode, FLL enabled, MCLK input frequency = 13MHz	1.80	1.82	1.00	1.05	1.80	0.73	1.80	0.30	2.50	0.01	6.18
48kHz sample rate, Master mode, FLL enabled, MCLK input frequency = 32.768kHz	1.80	1.83	1.00	0.94	1.80	0.76	1.80	0.29	2.50	0.01	6.14

Low Power Stereo Playback to Headphones - DAC input to HPOUTL+HPOUTR pins with 30Ω load.

Test conditions:

VMID_RES = 01 (for normal operation)

CP_DYN_PWR = 1 (Class-W, Charge pump controlled by real-time audio level)

Low Power Playback Mode enabled (See Table 48 for details)

SYSCLK = 6.144MHz, CLK_SYS_RATE = 0001b (for 128 fs clocking)

Variant test conditions	AVDD		DCVDD		DBVDD		CPVDD		MICVDD		TOTAL
	V	mA	V	mA	V	mA	V	mA	V	mA	mW
48kHz sample rate	1.80	0.99	1.00	0.61	1.80	0.00	1.80	0.31	2.50	0.01	2.98
48kHz, Po = 0.1mW/channel 1kHz sine wave 0dBFS HPOUT_VOL= -25dB DAC_VOL= 0dB	1.80	1.02	1.00	0.62	1.80	0.00	1.80	1.68	2.50	0.01	5.51
48kHz, Po = 1mW/channel 1kHz sine wave 0dBFS HPOUT_VOL= -15dB DAC_VOL= 0dB	1.80	1.04	1.00	0.62	1.80	0.00	1.80	5.23	2.50	0.01	11.93

High Performance Stereo Playback to Line-out - DAC input to LINEOUTL+LINEOUTR or HPOUTL+HPOUTR pins with 10kΩ / 50pF load

Test conditions:

VMID_RES = 01 (for normal operation)

CP_DYN_PWR = 1 (Class-W, Charge pump controlled by real-time audio level)

Low Power Playback mode disabled. (See Table 49 for details; note that Low Power Playback mode is disabled by default.)

Variant test conditions	AVDD		DCVDD		DBVDD		CPVDD		MICVDD		TOTAL
	V	mA	V	mA	V	mA	V	mA	V	mA	mW
48kHz sample rate	1.80	1.67	1.00	0.76	1.80	0.00	1.80	0.36	2.50	0.01	4.43
8kHz sample rate	1.80	1.67	1.00	0.18	1.80	0.00	1.80	0.36	2.50	0.01	3.86
48kHz, Po = 0dBFS 1kHz sine wave	1.80	1.78	1.00	0.77	1.80	0.00	1.80	2.27	2.50	0.01	8.09

Low Power Stereo Playback to Line-out - DAC input to LINEOUTL+LINEOUTR or HPOUTL+HPOUTR pins with 10kΩ / 50pF load

Test conditions:

VMID_RES = 01 (for normal operation)

CP_DYN_PWR = 1 (Class-W, Charge pump controlled by real-time audio level)

Low Power Playback Mode enabled (see Table 48 for details)

SYSCLK = 6.144MHz, CLK_SYS_RATE = 0001b (for 128 fs clocking)

Variant test conditions	AVDD		DCVDD		DBVDD		CPVDD		MICVDD		TOTAL
	V	mA	V	mA	V	mA	V	mA	V	mA	mW
48kHz sample rate	1.80	0.99	1.00	0.61	1.80	0.00	1.80	0.22	2.50	0.01	2.81
48kHz, Po = 0dBFS 1kHz sine wave	1.80	1.04	1.00	0.62	1.80	0.00	1.80	1.77	2.50	0.01	5.70

Stereo analogue bypass to headphones - IN1L/R, IN2L/R or IN3L/R pins to HPOUTL+HPOUTR pins with 30Ω load.

Test conditions:

LIN_VOL = RIN_VOL = 00101 = +0.0 dB

MCLK = 11.2896MHz

Digital audio interface disabled

Note that the Analogue bypass configuration does not benefit from the Class W dynamic control.

Variant test conditions	AVDD		DCVDD		DBVDD		CPVDD		MICVDD		TOTAL
	V	mA	V	mA	V	mA	V	mA	V	mA	mW
Quiescent HPOUTVOL = 000000 (-57dB)	1.8	1.24	1	0.11	1.8	0.00	1.8	0.26	2.5	0.01	2.82
Po = 0.1mW/channel 1kHz sine wave HPOUTVOL = 100000 (-25dB)	1.8	1.29	1	0.11	1.8	0.00	1.8	2.05	2.5	0.01	6.13
Po = 1mW/channel 1kHz sine wave HPOUTVOL = 101010 (-15dB)	1.8	1.30	1	0.11	1.8	0.00	1.8	5.86	2.5	0.01	13.02

Stereo analogue bypass to Line-out - IN1L/R, IN2L/R or IN3L/R pins to LINEOUTL+LINEOUTR pins with 30Ω load.

Test conditions:

LIN_VOL = RIN_VOL = 00101 = +0.0 dB

MCLK = 11.2896MHz

Digital audio interface disabled

Note that the Analogue bypass configuration does not benefit from the Class W dynamic control.

Variant test conditions	AVDD		DCVDD		DBVDD		CPVDD		MICVDD		TOTAL
	V	mA	V	mA	V	mA	V	mA	V	mA	mW
Quiescent LINEOUTVOL = 000000 (-57dB)	1.8	1.04	1.0	0.15	1.8	0.00	1.8	0.21	1.8	0.01	2.41
Quiescent LINEOUTVOL = 101011 (-14dB)	1.8	1.04	1.0	0.15	1.8	0.00	1.8	0.63	1.8	0.01	3.18
Quiescent LINEOUTVOL = 111001 (0dB)	1.8	1.04	1.0	0.15	1.8	0.00	1.8	1.25	1.8	0.01	4.28

Off

Note: DC servo calibration is retained in this state as long as DCVDD is supplied. This allows fast, pop suppressed start-up from the off state.

Variant test conditions	AVDD		DCVDD		DBVDD		CPVDD		MICVDD		TOTAL
	V	mA	V	mA	V	mA	V	mA	V	mA	mW
Off (default settings) No Clocks applied	1.8	0.01	1	0.00	1.8	0.00	1.8	0.01	2.5	0.01	0.04
Off (default settings) DACDAT, MCLK, BCLK, and LRCLK applied	1.8	0.01	1	0.02	1.8	0.00	1.8	0.01	2.5	0.01	0.06

SIGNAL TIMING REQUIREMENTS

COMMON TEST CONDITIONS

Unless otherwise stated, the following test conditions apply throughout the following sections:

- Ambient temperature = +25°C
- DCVDD = 1.0V
- DBVDD = AVDD = CPVDD = 1.8V
- DGND = AGND = CPGND = 0V

Additional, specific test conditions are given within the relevant sections below.

MASTER CLOCK

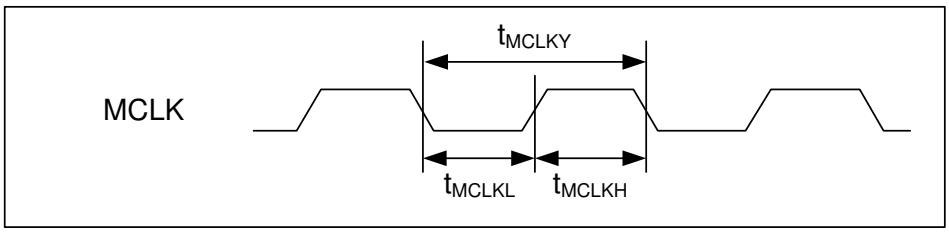

Figure 1 Master Clock Timing

Master Clock Timing						
PARAMETER	**SYMBOL**	**TEST CONDITIONS**	**MIN**	**TYP**	**MAX**	**UNIT**
MCLK cycle time	T_{MCLKY}	MCLK_DIV=1	40			ns
		MCLK_DIV=0	80			ns
MCLK duty cycle	T_{MCLKDS}		60:40		40:60	

AUDIO INTERFACE TIMING

MASTER MODE

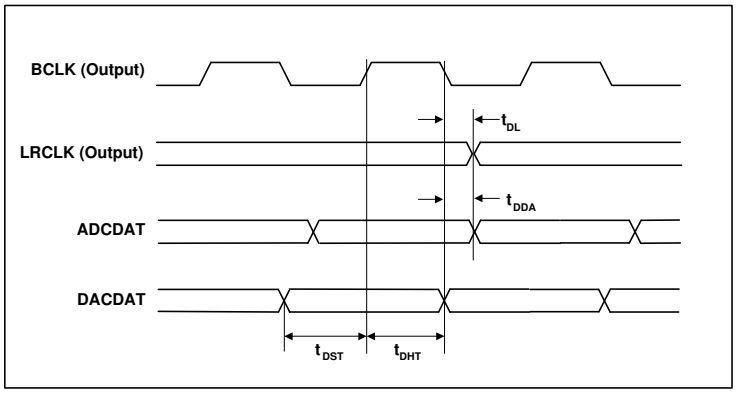

Figure 2 Audio Interface Timing – Master Mode

Test Conditions

DCVDD = 1.0V, AVDD = DBVDD = CPVDD = 1.8V, DGND=AGND=CPGND =0V, T_A = +25ºC, Master Mode, fs=48kHz, MCLK=256fs, 24-bit data, unless otherwise stated.

PARAMETER	SYMBOL	MIN	TYP	MAX	UNIT
Audio Interface Timing - Master Mode					
LRCLK propagation delay from BCLK falling edge	t_{DL}			20	ns
ADCDAT propagation delay from BCLK falling edge	t_{DDA}			20	ns
DACDAT setup time to BCLK rising edge	t_{DST}	20			ns
DACDAT hold time from BCLK rising edge	t_{DHT}	10			ns

SLAVE MODE

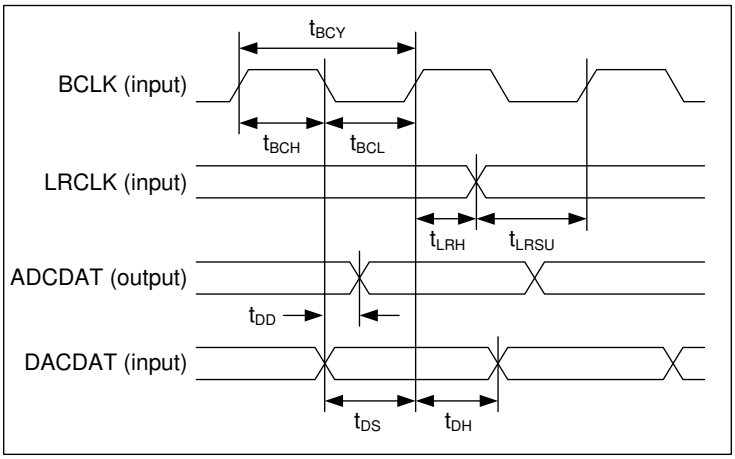

Figure 3 Audio Interface Timing – Slave Mode

Test Conditions

DCVDD = 1.0V, AVDD = DBVDD = CPVDD = 1.8V, DGND=AGND=CPGND =0V, T_A = +25°C, Slave Mode, fs=48kHz, MCLK=256fs, 24-bit data, unless otherwise stated.

PARAMETER	SYMBOL	MIN	TYP	MAX	UNIT
Audio Interface Timing - Slave Mode					
BCLK cycle time	t_{BCY}	50			ns
BCLK pulse width high	t_{BCH}	20			ns
BCLK pulse width low	t_{BCL}	20			ns
LRCLK set-up time to BCLK rising edge	t_{LRSU}	20			ns
LRCLK hold time from BCLK rising edge	t_{LRH}	10			ns
DACDAT hold time from BCLK rising edge	t_{DH}	10			ns
ADCDAT propagation delay from BCLK falling edge	t_{DD}			20	ns
DACDAT set-up time to BCLK rising edge	t_{DS}	20			ns

Note: BCLK period must always be greater than or equal to MCLK period.

TDM MODE

In TDM mode, it is important that two ADC devices do not attempt to drive the ADCDAT pin simultaneously. The timing of the WM8904 ADCDAT tri-stating at the start and end of the data transmission is described below.

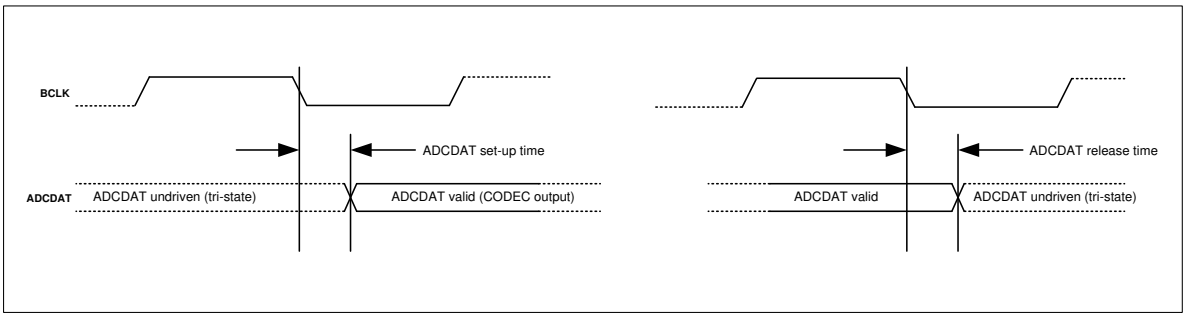

Figure 4 Audio Interface Timing - TDM Mode

Test Conditions

AVDD = CPVDD = 1.8V , DGND=AGND=CPGND= =0V, T_A = +25ºC, Master Mode, fs=48kHz, MCLK=256fs, 24-bit data, unless otherwise stated.

PARAMETER	CONDITIONS	MIN	TYP	MAX	UNIT
Audio Data Timing Information					
ADCDAT setup time from BCLK falling edge	DCVDD =2.0V DBVDD = 3.6V		5		ns
	DCVDD = 1.08V DBVDD = 1.62V		15		ns
ADCDAT release time from BCLK falling edge	DCVDD = 2.0V DBVDD = 3.6V		5		ns
	DCVDD = 1.08V DBVDD = 1.62V		15		ns

CONTROL INTERFACE TIMING

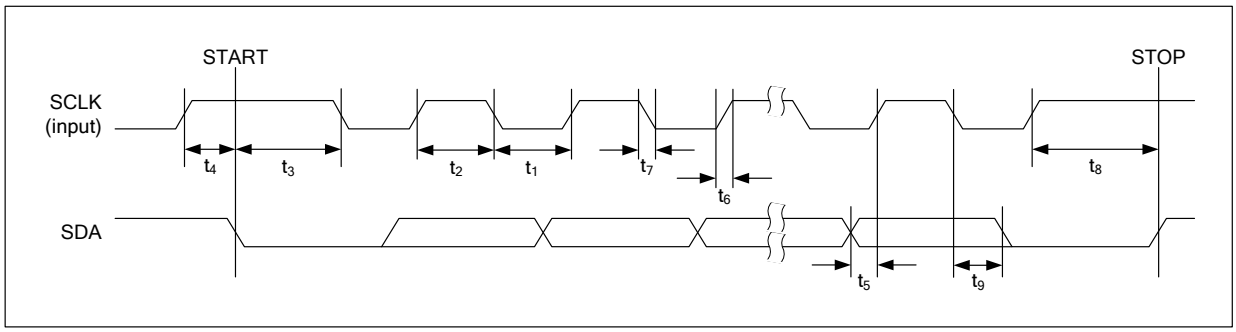

Figure 5 Control Interface Timing

Test Conditions

DCVDD = 1.0V, AVDD = DBVDD = CPVDD = 1.8V, DGND=AGND=CPGND =0V, T_A=+25°C, Slave Mode, fs=48kHz, MCLK = 256fs, 24-bit data, unless otherwise stated.

PARAMETER	SYMBOL	MIN	TYP	MAX	UNIT
SCLK Frequency				400	kHz
SCLK Low Pulse-Width	t_1	1300			ns
SCLK High Pulse-Width	t_2	600			ns
Hold Time (Start Condition)	t_3	600			ns
Setup Time (Start Condition)	t_4	600			ns
Data Setup Time	t_5	100			ns
SDA, SCLK Rise Time	t_6			300	ns
SDA, SCLK Fall Time	t_7			300	ns
Setup Time (Stop Condition)	t_8	600			ns
Data Hold Time	t_9			900	ns
Pulse width of spikes that will be suppressed	t_{ps}	0		5	ns

DIGITAL FILTER CHARACTERISTICS

PARAMETER	TEST CONDITIONS	MIN	TYP	MAX	UNIT
ADC Filter					
Passband	+/- 0.05dB	0		0.454 fs	
	-6dB		0.5 fs		
Passband Ripple				+/- 0.05	dB
Stopband		0.546s			
Stopband Attenuation	f > 0.546 fs	-60			dB
DAC Normal Filter					
Passband	+/- 0.05dB	0		0.454 fs	
	-6dB		0.5 fs		
Passband Ripple	0.454 fs			+/- 0.03	dB
Stopband		0.546 fs			
Stopband Attenuation	F > 0.546 fs	-50			dB
DAC Sloping Stopband Filter					
Passband	+/- 0.03dB	0		0.25 fs	
	+/- 1dB	0.25 fs		0.454 fs	
	-6dB		0.5 fs		
Passband Ripple	0.25 fs			+/- 0.03	dB
Stopband 1		0.546 fs		0.7 fs	
Stopband 1 Attenuation	f > 0.546 fs	-60			dB
Stopband 2		0.7 fs		1.4 fs	
Stopband 2 Attenuation	f > 0.7 fs	-85			dB
Stopband 3		1.4 fs			
Stopband 3 Attenuation	F > 1.4 fs	-55			dB

DAC FILTERS		ADC FILTERS	
Mode	**Group Delay**	**Mode**	**Group Delay**
Normal	16.5 / fs	Normal	16.5 / fs
Sloping Stopband	18 / fs		

TERMINOLOGY

1. Stop Band Attenuation (dB) – the degree to which the frequency spectrum is attenuated (outside audio band)
2. Pass-band Ripple – any variation of the frequency response in the pass-band region

ADC FILTER RESPONSES

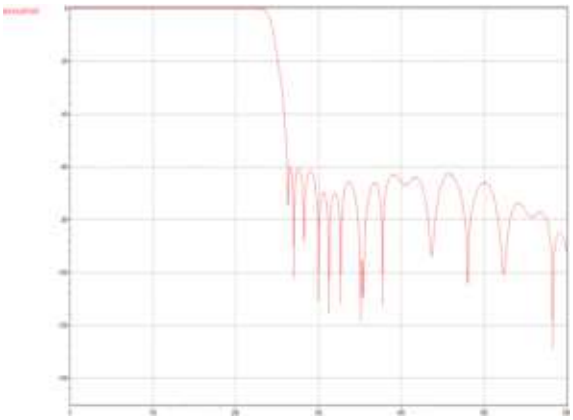

Figure 6 ADC Digital Filter Frequency Response

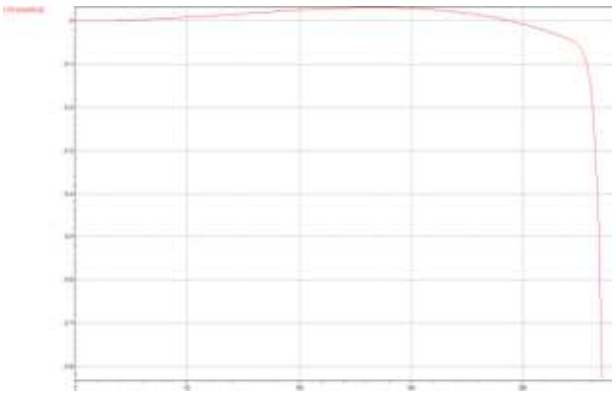

Figure 7 ADC Digital Filter Ripple

ADC HIGH PASS FILTER RESPONSES

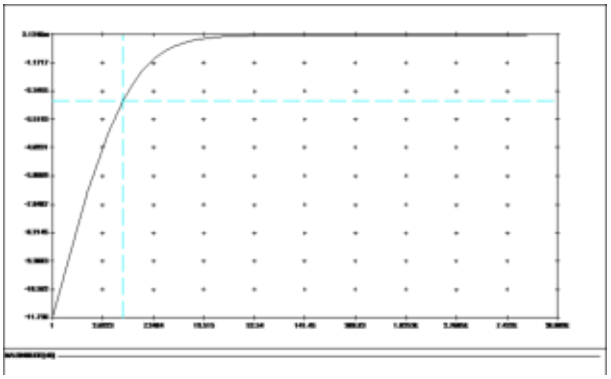

Figure 8 ADC Digital High Pass Filter Frequency Response (48kHz, Hi-Fi Mode, ADC_HPF_CUT[1:0]=00)

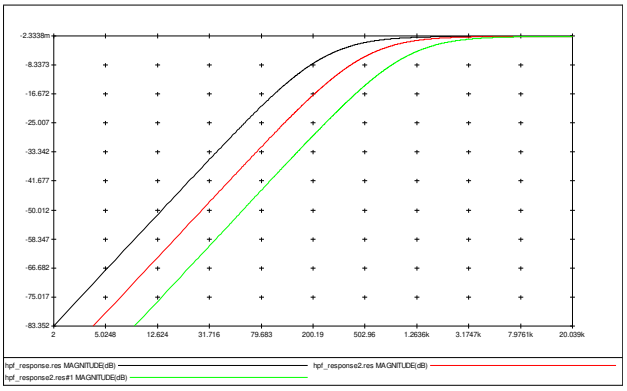

Figure 9 ADC Digital High Pass Filter Ripple (48kHz, Voice Mode, ADC_HPF_CUT=01, 10 and 11)

DAC FILTER RESPONSES

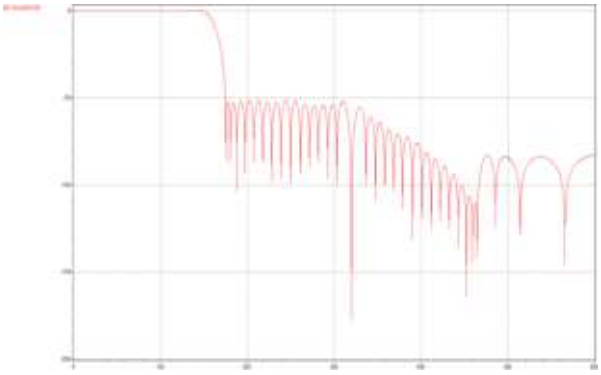

Figure 10 DAC Digital Filter Frequency Response; (Normal Mode); Sample Rate > 24kHz

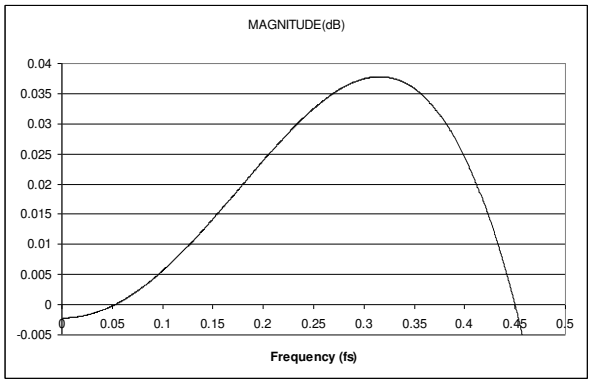

Figure 11 DAC Digital Filter Ripple (Normal Mode)

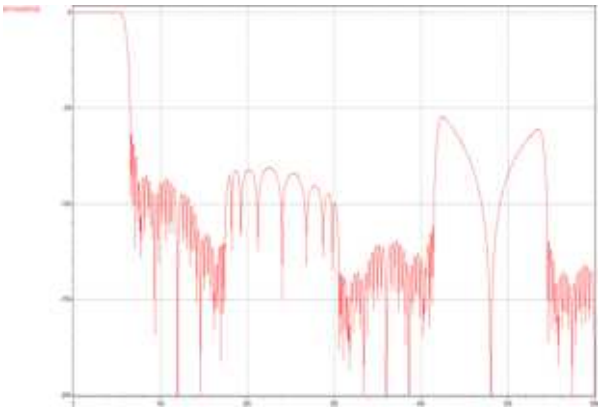

Figure 12 DAC Digital Filter Frequency Response; (Sloping Stopband Mode); Sample Rate <= 24kHz

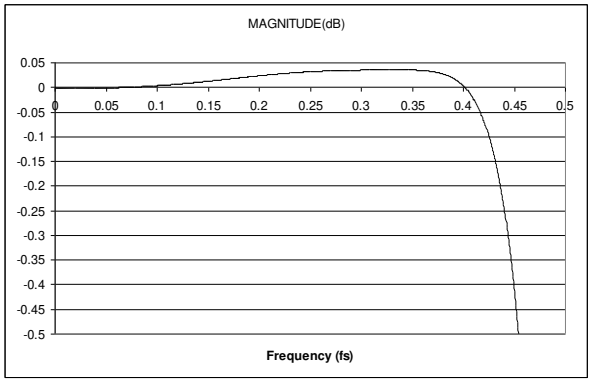

Figure 13 DAC Digital Filter Ripple (Sloping Stopband Mode)

DE-EMPHASIS FILTER RESPONSES

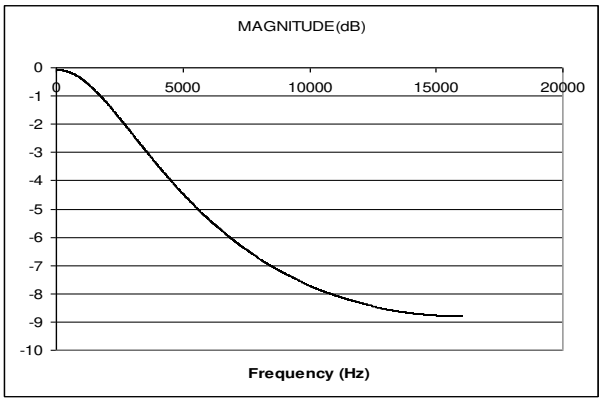

Figure 14 De-Emphasis Digital Filter Response (32kHz)

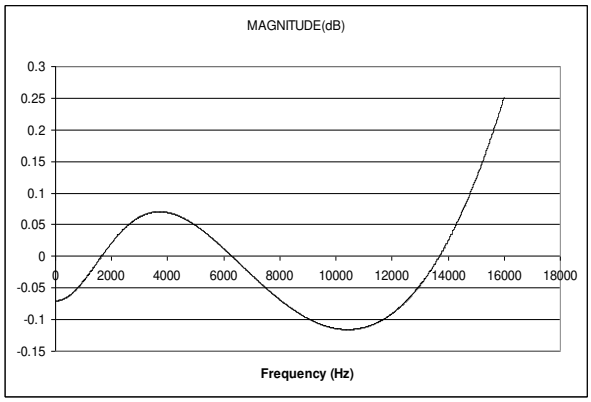

Figure 15 De-Emphasis Error (32kHz)

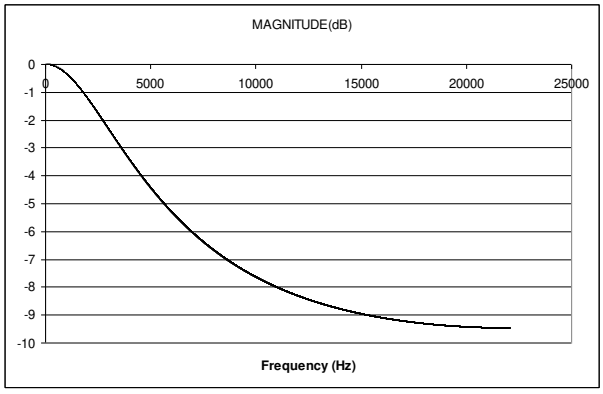

Figure 16 De-Emphasis Digital Filter Response (44.1kHz)

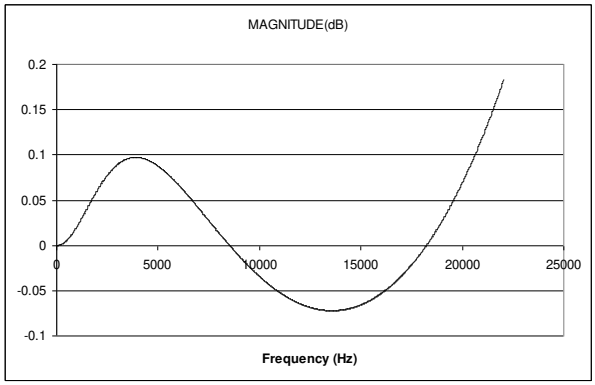

Figure 17 De-Emphasis Error (44.1kHz)

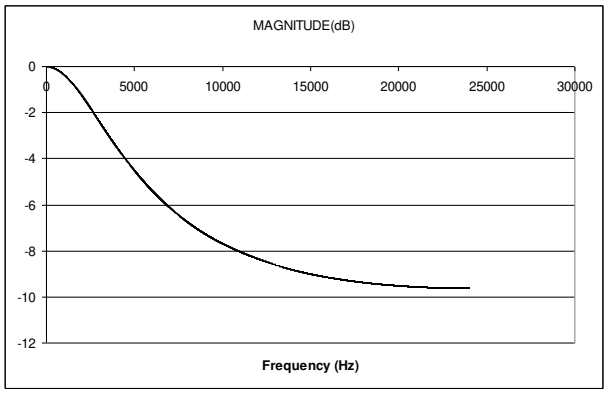

Figure 18 De-Emphasis Digital Filter Response (48kHz)

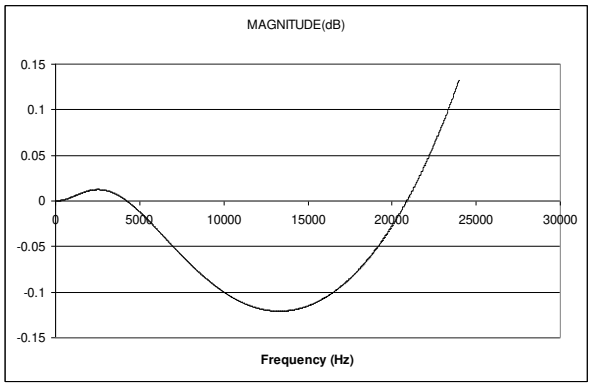

Figure 19 De-Emphasis Error (48kHz)

DEVICE DESCRIPTION

INTRODUCTION

The WM8904 is a high performance ultra-low power stereo CODEC optimised for portable audio applications. Flexible analogue interfaces and powerful digital signal processing (DSP) make it ideal for small portable devices.

The WM8904 supports up to 6 analogue audio inputs. One pair of single-ended or differential microphone/line inputs is selected as the ADC input source. An integrated bias reference is provided to power standard electret microphones.

A two-channel digital microphone interface is also supported, with direct input to the DSP core bypassing the ADCs.

One pair of ground-reference Class-W headphone outputs is provided; these are powered from an integrated Charge Pump, enabling high quality, power efficient headphone playback without any requirement for DC blocking capacitors. A DC Servo circuit is available for DC offset correction, thereby suppressing pops and reducing power consumption. Two line outputs are provided; these are also capable of driving ear speakers and stereo headsets. Ground loop feedback is available on the headphone outputs and the line outputs, providing rejection of noise on the ground connections. All outputs use SilentSwitch technology for pop and click suppression.

The stereo ADCs and DACs are of hi-fi quality, using a 24-bit low-order oversampling architecture to deliver optimum performance. A flexible clocking arrangement supports mixed ADC and DAC sample rates, whilst an integrated ultra-low power FLL provides additional flexibility. A high pass filter is available in the ADC path for removing DC offsets and suppressing low frequency noise such as mechanical vibration and wind noise. A digital mixing path from the ADC to the DAC provides a sidetone of enhanced quality during voice calls. DAC soft mute and un-mute is available for pop-free music playback.

The integrated Dynamic Range Controller (DRC) and ReTuneTM Mobile 5-band parametric equaliser (EQ) provide further processing capability of the digital audio paths. The DRC provides compression and signal level control to improve the handling of unpredictable signal levels. ‘Anti-clip’ and ‘quick release’ algorithms improve intelligibility in the presence of transients and impulsive noises. The EQ provides the capability to tailor the audio path according to the frequency characteristics of an earpiece or loudspeaker, and/or according to user preferences.

The WM8904 has a highly flexible digital audio interface, supporting a number of protocols, including I2S, DSP, MSB-first left/right justified, and can operate in master or slave modes. PCM operation is supported in the DSP mode. A-law and μ-law companding are also supported. Time division multiplexing (TDM) is available to allow multiple devices to stream data simultaneously on the same bus, saving space and power.

The system clock SYSCLK provides clocking for the ADCs, DACs, DSP core, digital audio interface and other circuits. SYSCLK can be derived directly from the MCLK pin or via an integrated FLL, providing flexibility to support a wide range of clocking schemes. Typical portable system MCLK frequencies, and sample rates from 8kHz to 48kHz are all supported. The clocking circuits are configured automatically from the sample rate (fs) and from the SYSCLK / fs ratio.

The integrated FLL can be used to generate SYSCLK from a wide variety of different reference sources and frequencies. The FLL can accept a wide range of reference frequencies, which may be high frequency (e.g. 13MHz) or low frequency (eg. 32.768kHz). The FLL is tolerant of jitter and may be used to generate a stable SYSCLK from a less stable input signal. The integrated FLL can be used as a free-running oscillator, enabling autonomous clocking of the Charge Pump and DC Servo if required.

The WM8904 uses a standard 2-wire control interface, providing full software control of all features, together with device register readback. An integrated Control Write Sequencer enables automatic scheduling of control sequences; commonly-used signal configurations may be selected using ready-programmed sequences, including time-optimised control of the WM8904 pop suppression features. It is an ideal partner for a wide range of industry standard microprocessors, controllers and DSPs. Unused circuitry can be disabled under software control, in order to save power; low leakage currents enable extended standby/off time in portable battery-powered applications.

Up to 4 GPIO pins may be configured for miscellaneous input/output functions such as button/accessory detect inputs, or for clock, system status, or programmable logic level output for

control of additional external circuitry. Interrupt logic, status readback and de-bouncing options are supported within this functionality.

ANALOGUE INPUT SIGNAL PATH

The WM8904 has six analogue input pins, which may be used to support connections to multiple microphone or line input sources. The input multiplexer on the Left and Right channels can be used to select different configurations for each of the input sources. The analogue input paths can support line and microphone inputs, in single-ended and differential modes. The input stage can also provide common mode noise rejection in some configurations.

Two of the six analogue input pins have dual functionality and can be used as digital microphone inputs. (See the “Digital Microphone Interface” section for details.)

The Left and Right analogue input channels are routed to the Analogue to Digital converters (ADCs). There is also a bypass path for each channel, enabling the signal to be routed directly to the output multiplexers and PGAs.

The WM8904 input signal paths and control registers are illustrated in Figure 20.

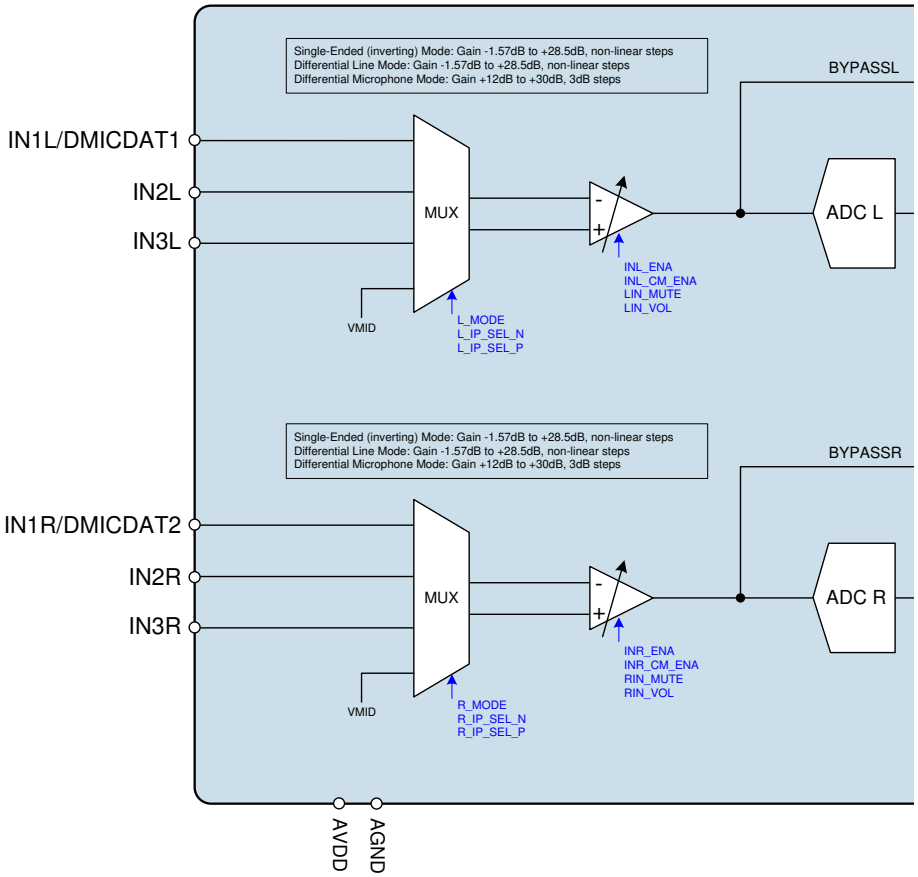

Figure 20 Block Diagram for Input Signal Path

INPUT PGA ENABLE

The input PGAs (Programmable Gain Amplifiers) and Multiplexers are enabled using register bits INL_ENA and INR_ENA, as shown in Table 1.

REGISTER ADDRESS	BIT	LABEL	DEFAULT	DESCRIPTION
R12 (0Ch) Power Management 0	1	INL_ENA	0	Left Input PGA Enable 0 = disabled 1 = enabled
	0	INR_ENA	0	Right Input PGA Enable 0 = disabled 1 = enabled

Table 1 Input PGA Enable

To enable the input PGAs, the reference voltage VMID and the bias current must also be enabled. See Reference Voltages and Master Bias for details of the associated controls VMID_RES and BIAS_ENA.

INPUT PGA CONFIGURATION

The analogue input channels can each be configured in three different modes, which are as follows:

- Single-Ended Mode (Inverting)
- Differential Line Mode
- Differential Mic Mode

The mode is selected by the L_MODE and R_MODE fields for the Left and Right channels respectively. The input pins are selected using the L_IP_SEL_N and L_IP_SEL_P fields for the Left channel and the R_IP_SEL_N and R_IP_SEL_P for the Right channel. In Single-Ended mode, L_IP_SEL_N alone determines the Left Input pin, and the R_IP_SEL_N determines the Right Input pin.

The three modes are illustrated in Figure 21, Figure 22 and Figure 23. It should be noted that the available gain and input impedance varies between configurations (see also “Electrical Characteristics”). The input impedance is constant with PGA gain setting.

The Input PGA modes are selected and configured using the register fields described in Table 2 below.

REGISTER ADDRESS	BIT	LABEL	DEFAULT	DESCRIPTION
R46 (2Eh) Analogue Left Input 1	5:4	L_IP_SEL_N [1:0]	00	In Single-Ended or Differential Line Modes, this field selects the input pin for the inverting side of the left input path. In Differential Mic Mode, this field selects the input pin for the non-inverting side of the left input path. 00 = IN1L 01 = IN2L 1X = IN3L
	3:2	L_IP_SEL_P [1:0]	01	In Single-Ended or Differential Line Modes, this field selects the input pin for the non-inverting side of the left input path. In Differential Mic Mode, this field selects the input pin for the inverting side of the left input path. 00 = IN1L 01 = IN2L 1X = IN3L
	1:0	L_MODE [1:0]	00	Sets the mode for the left analogue input: 00 = Single-Ended 01 = Differential Line 10 = Differential MIC 11 = Reserved
R47 (2Fh) Analogue Right Input 1	5:4	R_IP_SEL_N [1:0]	00	In Single-Ended or Differential Line Modes, this field selects the input pin for the inverting side of the right input path. In Differential Mic Mode, this field selects the input pin for the non-inverting side of the right input path. 00 = IN1R 01 = IN2R 1X = IN3R
	3:2	R_IP_SEL_P [1:0]	01	In Single-Ended or Differential Line Modes, this field selects the input pin for the non-inverting side of the right input path. In Differential Mic Mode, this field selects the input pin for the inverting side of the right input path. 00 = IN1R 01 = IN2R 1X = IN3R
	1:0	R_MODE [1:0]	00	Sets the mode for the right analogue input: 00 = Single-Ended 01 = Differential Line 10 = Differential MIC 11 = Reserved

Table 2 Input PGA Mode Selection

SINGLE-ENDED INPUT

The Single-Ended PGA configuration is illustrated in Figure 21 for the Left channel. The available gain in this mode is from -1.57dB to +28.5dB in non-linear steps. The input to the ADC is phase inverted with respect to the selected input pin. Different input pins can be selected in the same mode by altering the L_IP_SEL_N field.

The equivalent configuration is also available on the Right channel; this can be selected independently of the Left channel mode.

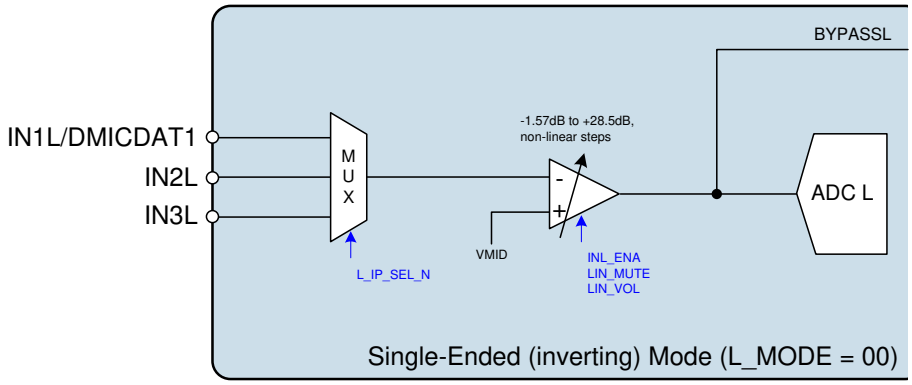

Figure 21 Single Ended Mode

DIFFERENTIAL LINE INPUT

The Differential Line PGA configuration is illustrated in Figure 22 for the Left channel. The available gain in this mode is from -1.57dB to +28.5dB in non-linear steps. The input to the ADC is in phase with the input pin selected by L_IP_SEL_P. The input to the ADC is phase inverted with respect to the input pin selected by L_IP_SEL_N.

As an option, common mode noise rejection can be provided in this PGA configuration, as illustrated in Figure 22. This is enabled using the register bits defined in Table 5.

The equivalent configuration is also available on the Right channel; this can be selected independently of the Left channel mode.

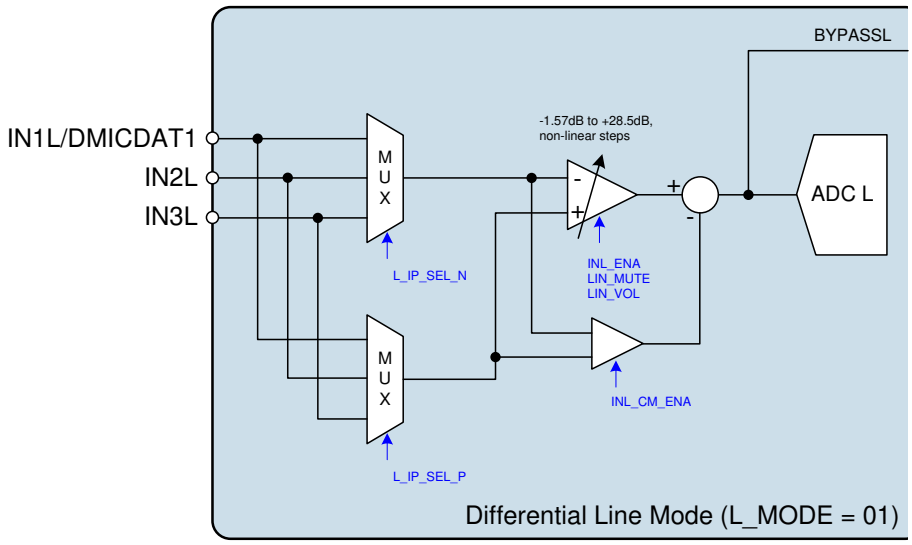

Figure 22 Differential Line Mode

DIFFERENTIAL MICROPHONE INPUT

The Differential Mic PGA configuration is illustrated in Figure 23 for the Left channel. The available gain in this mode is from +12dB to +30dB in 3dB linear steps. The input to the ADC is in phase with the input pin selected by L_IP_SEL_N. The input to the ADC is phase inverted with respect to the input pin selected by L_IP_SEL_P.

Note that the inverting input pin is selected using L_IP_SEL_P and the non-inverting input pin is selected using L_IP_SEL_N. This is not the same as for the Differential Line mode.

The equivalent configuration is also available on the Right channel; this can be selected independently of the Left channel mode.

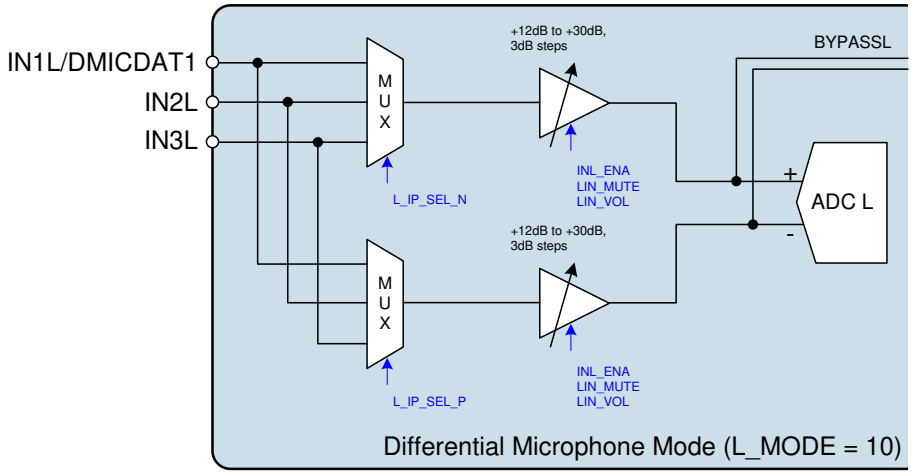

Figure 23 Differential Microphone Mode

INPUT PGA GAIN CONTROL

The volume control gain for the Left and Right channels be independently controlled using the LIN_VOL and RIN_VOL register fields as described in Table 3. The available gain range varies according to the selected PGA Mode as detailed in Table 4. Note that the value '00000' must not be used in Differential Mic Mode, as the PGA will not function correctly under this setting. In single-ended mode (L_MODE / R_MODE = 00b), the conversion from single-ended to differential within the WM8904 adds a further 6dB of gain to the signal path.

Each input channel can be independently muted using LINMUTE and RINMUTE.

It is recommended to not adjust the gain dynamically whilst the signal path is enabled; the signal should be muted at the input or output stage prior to adjusting the volume control.

REGISTER ADDRESS	BIT	LABEL	DEFAULT	DESCRIPTION
R44 (2Ch) Analogue Left Input 0	7	LINMUTE	1	Left Input PGA Mute 0 = not muted 1 = muted
	4:0	LIN_VOL [4:0]	00101	Left Input PGA Volume (See Table 4 for volume range)
R45 (2Dh) Analogue Right Input 0	7	RINMUTE	1	Right Input PGA Mute 0 = not muted 1 = muted
	4:0	RIN_VOL [4:0]	00101	Right Input PGA Volume (See Table 4 for volume range)

Table 3 Input PGA Volume Control

LIN_VOL [4:0], RIN_VOL [4:0]	GAIN – SINGLE-ENDED MODE / DIFFERENTIAL LINE MODE	GAIN – DIFFERENTIAL MIC MODE
00000	-1.5 dB	Not valid
00001	-1.3 dB	+12 dB
00010	-1.0 dB	+15 dB
00011	-0.7 dB	+18 dB
00100	-0.3 dB	+21 dB
00101	0.0 dB	+24 dB
00110	+0.3 dB	+27 dB
00111	+0.7 dB	+30 dB
01000	+1.0 dB	+30 dB
01001	+1.4 dB	+30 dB
01010	+1.8 dB	+30 dB
01011	+2.3 dB	+30 dB
01100	+2.7 dB	+30 dB
01101	+3.2 dB	+30 dB
01110	+3.7 dB	+30 dB
01111	+4.2 dB	+30 dB
10000	+4.8 dB	+30 dB
10001	+5.4 dB	+30 dB
10010	+6.0 dB	+30 dB
10011	+6.7 dB	+30 dB
10100	+7.5 dB	+30 dB
10101	+8.3 dB	+30 dB
10110	+9.2 dB	+30 dB
10111	+10.2 dB	+30 dB
11000	+11.4 dB	+30 dB
11001	+12.7 dB	+30 dB
11010	+14.3 dB	+30 dB
11011	+16.2 dB	+30 dB
11100	+19.2 dB	+30 dB
11101	+22.3 dB	+30 dB
11110	+25.2 dB	+30 dB
11111	+28.3 dB	+30 dB

Table 4 Input PGA Volume Range

INPUT PGA COMMON MODE AMPLIFIER

In Differential Line Mode only, a Common Mode amplifier can be enabled as part of the input PGA circuit. This feature provides approximately 20dB reduction in common mode noise on the differential input, which can reduce problematic interference. Since the ADC has differential signal inputs, it has an inherent immunity to common mode noise (see “Electrical Characteristics”) However, the presence of Common Mode noise can limit the usable signal range of the ADC path; enabling the Common Mode amplifier can solve this issue.

It should be noted that the Common Mode amplifier consumes additional power and can also add its own noise to the input signal. For these reasons, it is recommended that the Common Mode Amplifier is only enabled if there is a known source of Common Mode interference.

The Common Mode amplifier is controlled by the INL_CM_ENA and INR_CM_ENA fields as described in Table 5. Although the Common Mode amplifier may be enabled regardless of the input PGA mode, its function is only effective in the Differential Line Mode configuration.

REGISTER ADDRESS	BIT	LABEL	DEFAULT	DESCRIPTION
R46 (2Eh) Analogue Left Input 1	6	INL_CM_ENA	1	Left Input PGA Common Mode Rejection enable 0 = Disabled 1 = Enabled (only available for L_MODE=01 – Differential Line)
R47 (2Fh) Analogue Right Input 1	6	INR_CM_ENA	1	Right Input PGA Common Mode Rejection enable 0 = Disabled 1 = Enabled (only available for R_MODE=01 – Differential Line)

Table 5 Common Mode Amplifier Enable

ELECTRET CONDENSER MICROPHONE INTERFACE

Electret Condenser microphones may be connected as single-ended or differential inputs to the Input PGAs described in the "Analogue Input Signal Path" section. The WM8904 provides a low-noise reference voltage (MICBIAS) suitable for biasing electret condenser microphones.

MICBIAS CONTROL

The MICBIAS reference is provided on the MICBIAS pin. This reference voltage is enabled by setting the MICBIAS_ENA register bit.

The MICBIAS output voltage is selected using the MICBIAS_SEL register. This register selects the output voltage as a ratio of AVDD; the actual output voltage scales with AVDD.

The MICBIAS output is powered from the MICVDD supply pin, and uses VMID (ie. AVDD/2) as a reference, as illustrated in Figure 24. In all cases, MICVDD must be at least 200mV greater than the required MICBIAS output voltage.

Under the default setting of MICBIAS_SEL, the MICVDD supply may be connected directly to AVDD. For other settings of MICBIAS_SEL, (ie. for higher MICBIAS voltages), the MICVDD supply must be greater than AVDD.

The MICBIAS generator is illustrated in in Figure 24. The associated control registers are defined in Table 6.

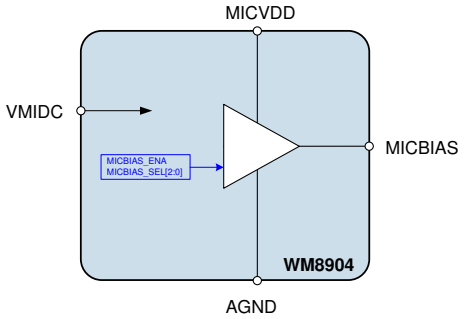

Figure 24 MICBIAS Generator

REGISTER ADDRESS	BIT	LABEL	DEFAULT	DESCRIPTION
R6 (06h) Mic Bias Control 0	0	MICBIAS_ENA	0	MICBIAS Enable 0 = disabled 1 = enabled
R7 (07h) Mic Bias Control 1	2:0	MICBIAS_SEL [2:0]	000	Selects MICBIAS voltage 000 = 9/10 x AVDD (1.6V) 001 = 10/9 x AVDD (2.0V) 010 = 7/6 x AVDD (2.1V) 011 = 4/3 x AVDD (2.4V) 100 to 111 = 3/2 x AVDD (2.7V) Note that the voltage scales with AVDD. The value quoted in brackets is correct for AVDD=1.8V.

Table 6 MICBIAS Control

MICBIAS CURRENT DETECT

A MICBIAS Current Detect function is provided for external accessory detection. This is provided in order to detect the insertion/removal of a microphone or the pressing/releasing of the microphone 'hook' switch; these events will cause a significant change in MICBIAS current flow, which can be detected and used to generate a signal to the host processor.

The MICBIAS current detect function is enabled by setting the MICDET_ENA register bit. When this function is enabled, two current thresholds can be defined, using the MICDET_THR and MICSHORT_THR registers. When a change in MICBIAS current which crosses either threshold is detected, then an interrupt event can be generated. In a typical application, accessory insertion would be detected when the MICBIAS current exceeds MICDET_THR, and microphone hookswitch operation would be detected when the MICBIAS current exceeds MICSHORT_THR.

The current detect threshold functions are both inputs to the Interrupt control circuit and can be used to trigger an Interrupt event when either threshold is crossed. Both events can also be indicated as an output on a GPIO pin - see "General Purpose Input/Output (GPIO)".

The current detect thresholds are enabled and controlled using the registers described in Table 7. Performance parameters for this circuit block can be found in the "Electrical Characteristics" section.

Hysteresis and filtering is also provided in the both current detect circuits to improve reliability in conditions where AC current spikes are present due to ambient noise conditions. These features are described in the following section. Further guidance on the usage of the MICBIAS current monitoring features is also described in the following pages.

REGISTER ADDRESS	BIT	LABEL	DEFAULT	DESCRIPTION
R6 (06h) Mic Bias Control 0	6:4	MICDET_THR [2:0]	000	MICBIAS Current Detect Threshold (AVDD = 1.8V) 000 = 0.070mA 001 = 0.260mA 010 = 0.450mA 011 = 0.640mA 100 = 0.830mA 101 = 1.020mA 110 = 1.210mA 111 = 1.400mA Note that the value scales with AVDD. The value quoted is correct for AVDD=1.8V.
	3:2	MICSHORT_THR [1:0]	00	MICBIAS Short Circuit Threshold (AVDD = 1.8V) 00 = 0.520mA 01 = 0.880mA 10 = 1.240mA 11 = 1.600mA Note that the value scales with AVDD. The value quoted is correct for AVDD=1.8V.
	1	MICDET_ENA	0	MICBIAS Current and Short Circuit Detect Enable 0 = disabled 1 = enabled

Table 7 MICBIAS Current Detect

MICBIAS CURRENT DETECT FILTERING

The function of the filtering is to ensure that AC current spikes caused by ambient noise conditions near the microphone do not lead to incorrect signalling of the microphone insertion/removal status or the microphone hookswitch status.

Hysteresis on the current thresholds is provided; this means that a different current threshold is used to detect microphone insertion and microphone removal. Similarly, a different current threshold is used to detect hookswitch press and hookswtich release.

Digital filtering of the hookswitch status ensures that the MICBIAS Short Circuit detection event is only signalled if the MICSHORT_THR threshold condition has been met for 10 consecutive measurements.

In a typical application, microphone insertion would be detected when the MICBIAS current exceeds the Current Detect threshold set by MICDET_THR.

When the MIC_DET_EINT_POL interrupt polarity bit is set to 0, then microphone insertion detection will cause the MIC_DET_EINT interrupt status register to be set.

For detection of microphone removal, the MIC_DET_EINT_POL bit should be set to 1. When the MIC_DET_EINT_POL interrupt polarity bit is set to 1, then microphone removal detection will cause the MIC_DET_EINT interrupt status register to be set.

The detection of these events is bandwidth limited for best noise rejection, and is subject to detection delay time t_{DET}, as specified in the “Electrical Characteristics”. Provided that the MICDET_THR field has been set appropriately, each insertion or removal event is guaranteed to be detected within the delay time t_{DET}.

It is likely that the microphone socket contacts will have mechanical “bounce” when a microphone is inserted or removed, and hence the resultant control signal will not be a clean logic level transition. Since t_{DET} has a range of values, it is possible that the interrupt will be generated before the mechanical “bounce” has ceased. Hence after a mic insertion or removal has been detected, a time delay should be applied before re-configuring the MIC_DET_EINT_POL bit. The maximum possible mechanical bounce times for mic insertion and removal must be understood by the software programmer.

Utilising a GPIO pin to monitor the steady state of the microphone detection function does not change the timing of the detection mechanism, so there will also be a delay t_{DET} before the signal changes state. It may be desirable to implement de-bounce in the host processor when monitoring the state of the GPIO signal.

Microphone hook switch operation is detected when the MICBIAS current exceeds the Short Circuit Detect threshold set by MICSHORT_THR. Using the digital filtering, the hook switch detection event is only signalled if the MICSHORT_THR threshold condition has been met for 10 consecutive measurements.

When the MIC_SHRT_EINT_POL interrupt polarity bit is set to 0, then hook switch operation will cause the MIC_SHRT_EINT interrupt status register to be set.

For detection of microphone removal, the MIC_SHRT_EINT_POL bit should be set to 1. When the MIC_SHRT_EINT_POL interrupt polarity bit is set to 1, then hook switch release will cause the MIC_SHRT_EINT interrupt status register to be set.

The hook switch detection measurement frequency and the detection delay time t_{SHORT} are detailed in the “Electrical Characteristics” section.

The WM8904 Interrupt function is described in the “Interrupts” section. Example control sequences for configuring the Interrupts functions for MICBIAS current detection events are described in the “Applications Information” section.

A clock is required for the digital filtering function, and the DC Servo must also be running. This requires:

- MCLK is present or the FLL is selected as the SYSCLK source in free-running mode
- CLK_SYS_ENA = 1
- DCS_ENA_CHAN_n is enabled (where n = 0, 1, 2 or 3)

Any MICBIAS Current Detect event (accessory insertion/removal or hookswitch press/release) which happens while one or more of the clocking criteria is not satisfied (for example during a low power mode where the CPU has disabled MCLK) will still be detected, but only after the clocking conditions are met. An example is illustrated in Figure 25, where the mic is inserted while MCLK is stopped.

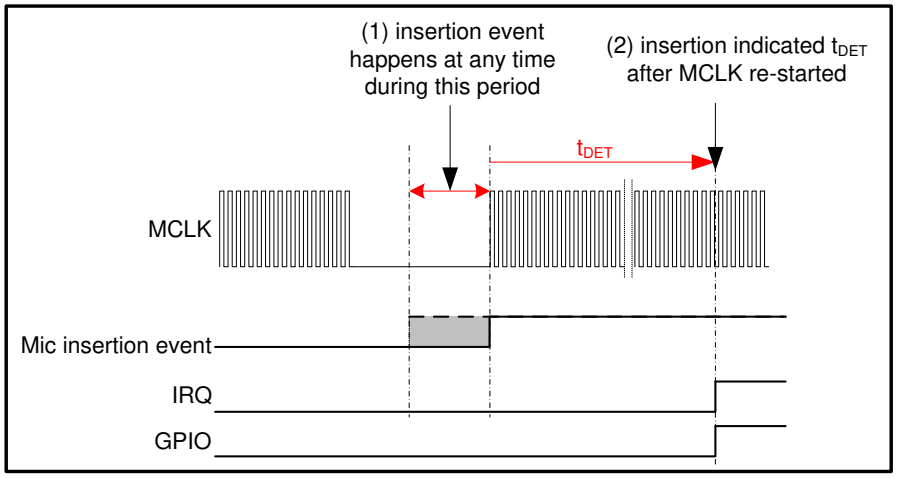

Figure 25 MICBIAS Detection events without MCLK

MICROPHONE HOOK SWITCH DETECTION

The possibility of spurious hook switch interrupts due to ambient noise conditions can be removed by careful understanding of microphone behaviour under extremely high sound pressure levels or during mechanical shock, and by correct selection of the MICBIAS resistor value; these factors will affect the level of the MICBIAS AC current spikes.

In applications where where the Current Detect threshold is close to the level of the current spikes, the probability of false detections is reduced by the hysteresis and digital filtering described above.

Note that the filtering algorithm provides only limited rejection of very high current spikes at frequencies less than or equal to the hook switch detect measurement frequency, or at frequencies equal to harmonics of the hook switch detect measurement frequency.

The MICBIAS Hook Switch detection filtering is illustrated in Figure 26. Example control sequences for configuring the Interrupts functions for MICBIAS current detection events are described in the “Applications Information” section.

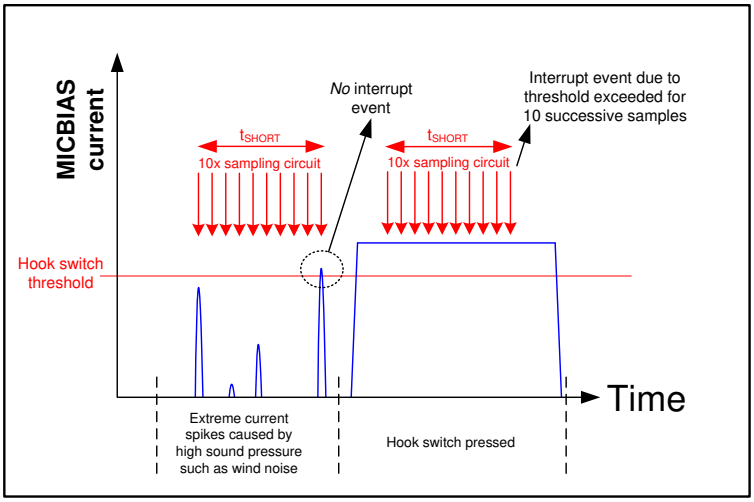

Figure 26 MICBIAS Hook Switch Detection Filtering

DIGITAL MICROPHONE INTERFACE

The WM8904 supports a stereo digital microphone interface. This may be provided on DMICDAT1 or on DMICDAT2, as selected by the DMIC_SRC register bit. The analogue signal path from the selected input pin must be disabled when using the digital microphone interface; this is achieved by configuring or disabling the associated input PGA.

The two-channel audio data is multiplexed on the selected input pin. The associated clock, DMICCLK, is provided on a GPIO pin.

The Digital Microphone Input is selected as input by setting the DMIC_ENA bit. When the Digital Microphone Input is selected, the ADC is bypassed.

The digital microphone interface configuration is illustrated in Figure 27.

Note that care must be taken to ensure that the respective digital logic levels of the microphone are compatible with the digital input thresholds of the WM8904. The digital input thresholds are referenced to DBVDD, as defined in "Electrical Characteristics". It is recommended to power the digital microphones from DBVDD.

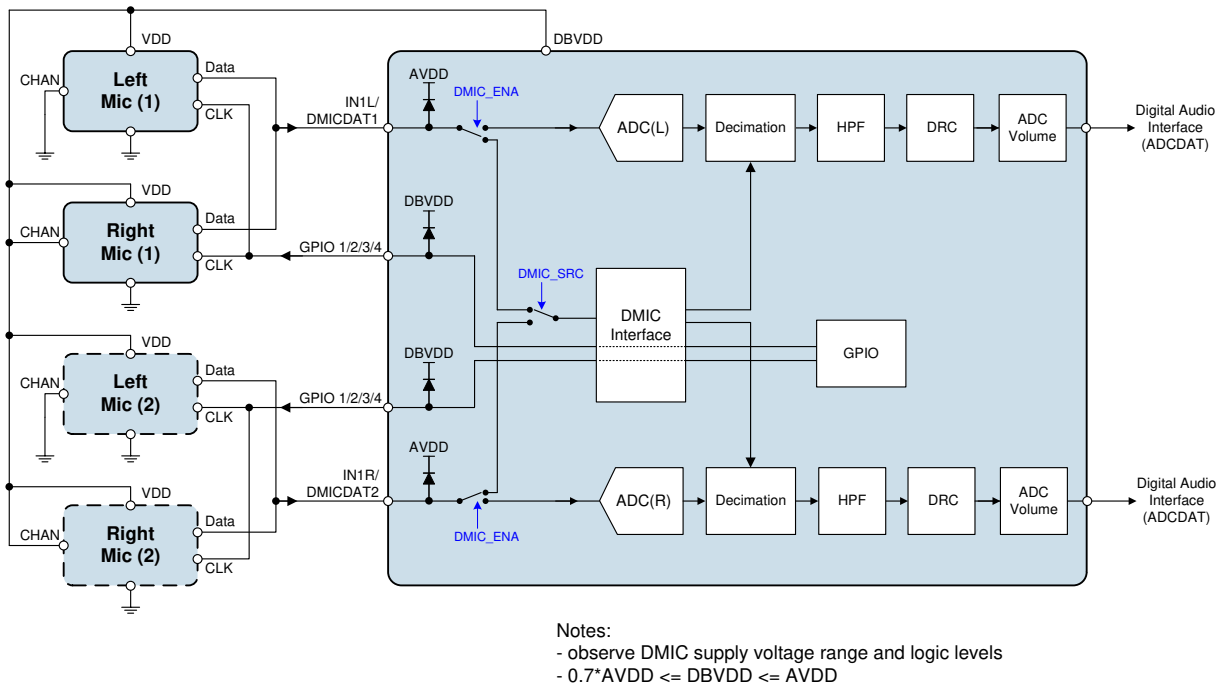

Figure 27 Digital Microphone Interface

When any GPIO pin is configured as DMIC Clock output, the WM8904 outputs a clock, which supports Digital Microphone operation at the ADC sampling rate. The ADC and Record Path filters must be enabled and the ADC sampling rate must be set in order to ensure correct operation of all DSP functions associated with the digital microphone. Volume control for the Digital Microphone Interface signals is provided using the ADC Volume Control.

See "Analogue-to-Digital Converter (ADC)" for details of the ADC Enable and volume control functions. See "General Purpose Input/Output (GPIO)" for details of configuring the DMICCLK output. See "Clocking and Sample Rates" for details of the sample rate control.

When the DMIC_ENA bit is set, then the IN1L/DMICDAT1 or IN1R/DMICDAT2 pin is used as the digital microphone input DMICDAT. Up to two microphones can share each pin; the two microphones are interleaved as illustrated in Figure 28.

The digital microphone interface requires that MIC1 (Left Channel) transmits a data bit each time that DMICCLK is high, and MIC2 (Right Channel) transmits when DMICCLK is low. The WM8904 samples

the digital microphone data in the middle of each DMICCLK clock phase. Each microphone must tri-state its data output when the other microphone is transmitting.

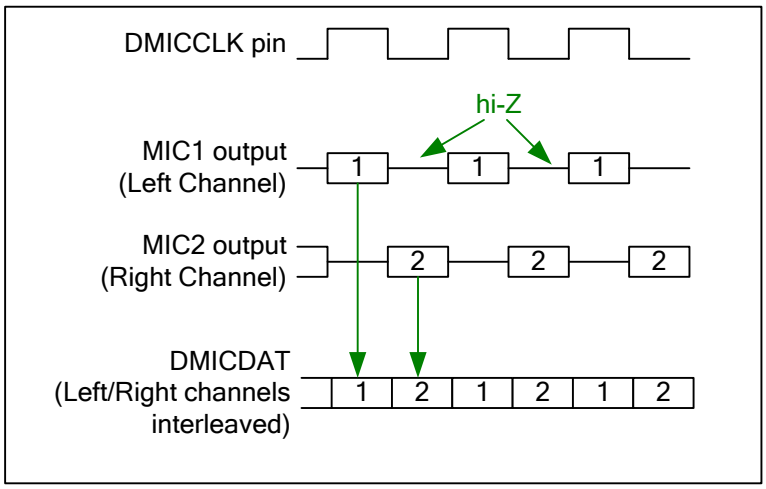

Figure 28 Digital Microphone Interface Timing

The digital microphone interface control fields are described in Table 8.

REGISTER ADDRESS	BIT	LABEL	DEFAULT	DESCRIPTION
R39 (27h) Digital Microphone 0	12	DMIC_ENA	0	Enables Digital Microphone mode 0 = Audio DSP input is from ADC 1 = Audio DSP input is from digital microphone interface When DMIC_ENA = 0, the Digital microphone clock (DMICCLK) is held low.
	11	DMIC_SRC	0	Selects Digital Microphone Data Input pin 0 = IN1L/DMICDAT1 1 = IN1R/DMICDAT2

Table 8 Digital Microphone Interface Control

ANALOGUE-TO-DIGITAL CONVERTER (ADC)

The WM8904 uses stereo 24-bit, 128x oversampled sigma-delta ADCs. The use of multi-bit feedback and high oversampling rates reduces the effects of jitter and high frequency noise. An oversample rate of 64x can also be supported - see “Clocking and Sample Rates” for details. The ADC full scale input level is proportional to AVDD - see “Electrical Characteristics”. Any input signal greater than full scale may overload the ADC and cause distortion.

The ADCs are enabled by the ADCL_ENA and ADCR_ENA register bits.

REGISTER ADDRESS	BIT	LABEL	DEFAULT	DESCRIPTION
R18 (12h) Power Management (6)	1	ADCL_ENA	0	Left ADC Enable 0 = ADC disabled 1 = ADC enabled
	0	ADCR_ENA	0	Right ADC Enable 0 = ADC disabled 1 = ADC enabled

Table 9 ADC Enable Control

ADC DIGITAL VOLUME CONTROL

The output of the ADCs can be digitally amplified or attenuated over a range from -71.625dB to +17.625dB in 0.375dB steps. The volume of each channel can be controlled separately. The gain for a given eight-bit code is detailed in Table 11.

The ADC_VU bit controls the loading of digital volume control data. When ADC_VU is set to 0, the ADCL_VOL or ADCR_VOL control data will be loaded into the respective control register, but will not actually change the digital gain setting. Both left and right gain settings are updated when a 1 is written to ADC_VU. This makes it possible to update the gain of both channels simultaneously.

REGISTER ADDRESS	BIT	LABEL	DEFAULT	DESCRIPTION
R36 (24h) ADC Digital Volume Left	8	ADC_VU	0	ADC Volume Update Writing a 1 to this bit will cause left and right ADC volume to be updated simultaneously
	7:0	ADCL_VOL [7:0]	1100_0000 (0dB)	Left ADC Digital Volume 00h = Mute 01h = -71.625dB 02h = -71.250dB … (0.375dB steps) C0h = 0dB … (0.375dB steps) EFh to FFh = +17.625dB (See Table 11 for volume range)
R37 (25h) ADC Digital Volume Right	8	ADC_VU	0	ADC Volume Update Writing a 1 to this bit will cause left and right ADC volume to be updated simultaneously
	7:0	ADCR_VOL [7:0]	1100_0000 (0dB)	Right ADC Digital Volume 00h = Mute 01h = -71.625dB 02h = -71.250dB … (0.375dB steps) C0h = 0dB … (0.375dB steps) EFh to FFh = +17.625dB (See Table 11 for volume range)

Table 10 ADC Digital Volume Control

ADCL_VOL or ADCR_VOL	Volume (dB)	ADCL_VOL or ADCR_VOL	Volume (dB)	ADCL_VOL or ADCR_VOL	Volume (dB)	ADCL_VOL or ADCR_VOL	Volume (dB)
0h	MUTE	40h	-48.000	80h	-24.000	C0h	0.000
1h	-71.625	41h	-47.625	81h	-23.625	C1h	0.375
2h	-71.250	42h	-47.250	82h	-23.250	C2h	0.750
3h	-70.875	43h	-46.875	83h	-22.875	C3h	1.125
4h	-70.500	44h	-46.500	84h	-22.500	C4h	1.500
5h	-70.125	45h	-46.125	85h	-22.125	C5h	1.875
6h	-69.750	46h	-45.750	86h	-21.750	C6h	2.250
7h	-69.375	47h	-45.375	87h	-21.375	C7h	2.625
8h	-69.000	48h	-45.000	88h	-21.000	C8h	3.000
9h	-68.625	49h	-44.625	89h	-20.625	C9h	3.375
Ah	-68.250	4Ah	-44.250	8Ah	-20.250	CAh	3.750
Bh	-67.875	4Bh	-43.875	8Bh	-19.875	CBh	4.125
Ch	-67.500	4Ch	-43.500	8Ch	-19.500	CCh	4.500
Dh	-67.125	4Dh	-43.125	8Dh	-19.125	CDh	4.875
Eh	-66.750	4Eh	-42.750	8Eh	-18.750	CEh	5.250
Fh	-66.375	4Fh	-42.375	8Fh	-18.375	CFh	5.625
10h	-66.000	50h	-42.000	90h	-18.000	D0h	6.000
11h	-65.625	51h	-41.625	91h	-17.625	D1h	6.375
12h	-65.250	52h	-41.250	92h	-17.250	D2h	6.750
13h	-64.875	53h	-40.875	93h	-16.875	D3h	7.125
14h	-64.500	54h	-40.500	94h	-16.500	D4h	7.500
15h	-64.125	55h	-40.125	95h	-16.125	D5h	7.875
16h	-63.750	56h	-39.750	96h	-15.750	D6h	8.250
17h	-63.375	57h	-39.375	97h	-15.375	D7h	8.625
18h	-63.000	58h	-39.000	98h	-15.000	D8h	9.000
19h	-62.625	59h	-38.625	99h	-14.625	D9h	9.375
1Ah	-62.250	5Ah	-38.250	9Ah	-14.250	DAh	9.750
1Bh	-61.875	5Bh	-37.875	9Bh	-13.875	DBh	10.125
1Ch	-61.500	5Ch	-37.500	9Ch	-13.500	DCh	10.500
1Dh	-61.125	5Dh	-37.125	9Dh	-13.125	DDh	10.875
1Eh	-60.750	5Eh	-36.750	9Eh	-12.750	DEh	11.250
1Fh	-60.375	5Fh	-36.375	9Fh	-12.375	DFh	11.625
20h	-60.000	60h	-36.000	A0h	-12.000	E0h	12.000
21h	-59.625	61h	-35.625	A1h	-11.625	E1h	12.375
22h	-59.250	62h	-35.250	A2h	-11.250	E2h	12.750
23h	-58.875	63h	-34.875	A3h	-10.875	E3h	13.125
24h	-58.500	64h	-34.500	A4h	-10.500	E4h	13.500
25h	-58.125	65h	-34.125	A5h	-10.125	E5h	13.875
26h	-57.750	66h	-33.750	A6h	-9.750	E6h	14.250
27h	-57.375	67h	-33.375	A7h	-9.375	E7h	14.625
28h	-57.000	68h	-33.000	A8h	-9.000	E8h	15.000
29h	-56.625	69h	-32.625	A9h	-8.625	E9h	15.375
2Ah	-56.250	6Ah	-32.250	AAh	-8.250	EAh	15.750
2Bh	-55.875	6Bh	-31.875	ABh	-7.875	EBh	16.125
2Ch	-55.500	6Ch	-31.500	ACh	-7.500	ECh	16.500
2Dh	-55.125	6Dh	-31.125	ADh	-7.125	EDh	16.875
2Eh	-54.750	6Eh	-30.750	AEh	-6.750	EEh	17.250
2Fh	-54.375	6Fh	-30.375	AFh	-6.375	EFh	17.625
30h	-54.000	70h	-30.000	B0h	-6.000	F0h	17.625
31h	-53.625	71h	-29.625	B1h	-5.625	F1h	17.625
32h	-53.250	72h	-29.250	B2h	-5.250	F2h	17.625
33h	-52.875	73h	-28.875	B3h	-4.875	F3h	17.625
34h	-52.500	74h	-28.500	B4h	-4.500	F4h	17.625
35h	-52.125	75h	-28.125	B5h	-4.125	F5h	17.625
36h	-51.750	76h	-27.750	B6h	-3.750	F6h	17.625
37h	-51.375	77h	-27.375	B7h	-3.375	F7h	17.625
38h	-51.000	78h	-27.000	B8h	-3.000	F8h	17.625
39h	-50.625	79h	-26.625	B9h	-2.625	F9h	17.625
3Ah	-50.250	7Ah	-26.250	BAh	-2.250	FAh	17.625
3Bh	-49.875	7Bh	-25.875	BBh	-1.875	FBh	17.625
3Ch	-49.500	7Ch	-25.500	BCh	-1.500	FCh	17.625
3Dh	-49.125	7Dh	-25.125	BDh	-1.125	FDh	17.625
3Eh	-48.750	7Eh	-24.750	BEh	-0.750	FEh	17.625
3Fh	-48.375	7Fh	-24.375	BFh	-0.375	FFh	17.625

Table 11 ADC Digital Volume Range

HIGH PASS FILTER

A digital high pass filter is applied by default to the ADC path to remove DC offsets. This filter can also be programmed to remove low frequency noise in voice applications (e.g. wind noise or mechanical vibration). This filter is controlled using the ADC_HPF and ADC_HPF_CUT register bits.

In hi-fi mode the high pass filter is optimised for removing DC offsets without degrading the bass response and has a cut-off frequency of 3.7Hz at fs=44.1kHz.

In voice mode the high pass filter is optimised for voice communication and it is recommended to program the cut-off frequency below 300Hz (e.g. ADC_HPF_CUT=11 at fs=8kHz or ADC_HPF_CUT=10 at fs=16kHz).

REGISTER ADDRESS	BIT	LABEL	DEFAULT	DESCRIPTION
R38 (26h) ADC Digital 0	6:5	ADC_HPF_CUT [1:0]	00	ADC Digital High Pass Filter Cut-Off Frequency (fc) 00 = Hi-fi mode (fc=4Hz at fs=48kHz) 01 = Voice mode 1 (fc=127Hz at fs=16kHz) 10 = Voice mode 2 (fc=130Hz at fs=8kHz) 11 = Voice mode 3 (fc=267Hz at fs=8kHz) (Note: fc scales with sample rate. See Table 13 for cut-off frequencies at all supported sample rates)
	4	ADC_HPF	1	ADC Digital High Pass Filter Enable 0 = disabled 1 = enabled

Table 12 ADC Digital 0 Register

Sample Frequency (kHz)	CUT-OFF FREQUENCY (Hz)			
	ADC_HPF_CUT =00	ADC_HPF_CUT =01	ADC_HPF_CUT =10	ADC_HPF_CUT =11
8.000	0.7	64	130	267
11.025	0.9	88	178	367
16.000	1.3	127	258	532
22.050	1.9	175	354	733
24.000	2.0	190	386	798
32.000	2.7	253	514	1063
44.100	3.7	348	707	1464
48.000	4.0	379	770	1594

Table 13 ADC High Pass Filter Cut-Off Frequencies

The high pass filter characteristics are shown in the “Digital Filter Characteristics” section.

ADC OVERSAMPLING RATIO (OSR)

The ADC oversampling rate is programmable to allow power consumption versus audio performance trade-offs. The default oversampling rate is high for best performance; using the lower OSR setting reduces ADC power consumption.

To ensure specified ADC performance, the ADC Bias Control bits in register R198 must be set correctly, depending on the ADC_OSR128 value, as described in Table 14.

REGISTER ADDRESS	BIT	LABEL	DEFAULT	DESCRIPTION
R10 (0Ah) Analogue ADC 0	0	ADC_OSR128	1	ADC Oversampling Ratio 0 = Low Power (64 x fs) 1 = High Performance (128 x fs)
R198 (C6h) ADC Test 0	2	ADC_128_OSR_TST_MODE	0	ADC Bias Control (1) Set this bit to 1 in ADC 64fs mode (ADC_OSR128 = 0). Set this bit to 0 in ADC 128fs mode (ADC_OSR128 = 1).
	0	ADC_BIASX1P5	0	ADC Bias Control (2) Set this bit to 1 in ADC 64fs mode (ADC_OSR128 = 0). Set this bit to 0 in ADC 128fs mode (ADC_OSR128 = 1).

Table 14 ADC Oversampling Ratio

DYNAMIC RANGE CONTROL (DRC)

The dynamic range controller (DRC) is a circuit which can be enabled in the digital data path of either the ADCs or the DACs. The function of the DRC is to adjust the signal gain in conditions where the input amplitude is unknown or varies over a wide range, e.g. when recording from microphones built into a handheld system. The DRC can apply Compression and Automatic Level Control to the signal path. It incorporates ‘anti-clip’ and ‘quick release’ features for handling transients in order to improve intelligibility in the presence of loud impulsive noises.

The DRC is enabled by DRC_ENA, as shown in Table 15. It can be enabled in the ADC digital path or in the DAC digital path, under the control of the DRC_DAC_PATH register bit. Note that the DRC can be active in only one of these paths at any time.

REGISTER ADDRESS	BIT	LABEL	DEFAULT	DESCRIPTION
R40 (28h) DRC Control 0	15	DRC_ENA	0	DRC enable 0 = disabled 1 = enabled
	14	DRC_DAC_PATH	0	DRC path select 0 = ADC path 1 = DAC path

Table 15 DRC Enable

COMPRESSION/LIMITING CAPABILITIES

The DRC supports two different compression regions, separated by a “knee” at input amplitude T. For signals above the knee, the compression slope DRC_HI_COMP applies; for signals below the knee, the compression slope DRC_LO_COMP applies.

The overall DRC compression characteristic in “steady state” (i.e. where the input amplitude is near-constant) is illustrated in Figure 29.

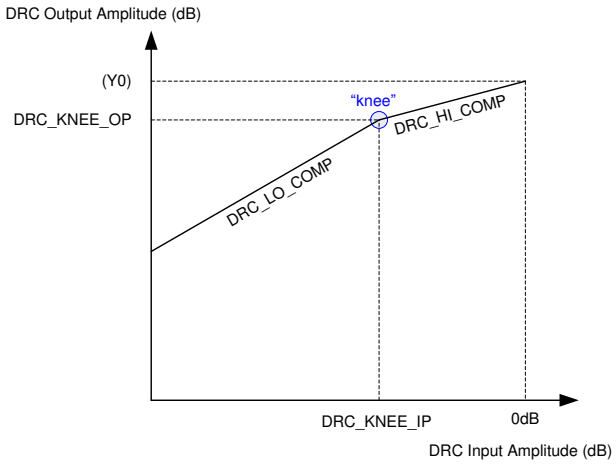

Figure 29 DRC Compression Characteristic

The slope of the DRC response is determined by register fields DRC_HI_COMP and DRC_LO_COMP respectively. A slope of 1 indicates constant gain in this region. A slope less than 1 represents compression (i.e. a change in input amplitude produces only a smaller change in output amplitude). A slope of 0 indicates that the target output amplitude is the same across a range of input amplitudes; this is infinite compression.

The “knee” in Figure 29 is represented by register fields DRC_KNEE_IP and DRC_KNEE_OP.

Parameter Y0, the output level for a 0dB input, is not specified directly, but can be calculated from the other parameters, using the equation

$$Y0 = DRC_KNEE_OP - (DRC_KNEE_IP * DRC_HI_COMP)$$

The DRC Compression parameters are defined in Table 16.

REGISTER ADDRESS	BIT	LABEL	DEFAULT	DESCRIPTION
R43 (2Bh) DRC Control 3	10:5	DRC_KNEE_IP [5:0]	00_0000	Input signal at the Compressor 'knee'. 000000 = 0dB 000001 = -0.75dB 000010 = -1.5dB … (-0.75dB steps) 111100 = -45dB 111101 to 111111 = Reserved
	4:0	DRC_KNEE_OP [4:0]	0_0000	Output signal at the Compressor 'knee'. 00000 = 0dB 00001 = -0.75dB 00010 = -1.5dB … (-0.75dB steps) 11110 = -22.5dB 11111 = Reserved

REGISTER ADDRESS	BIT	LABEL	DEFAULT	DESCRIPTION
R42 (2Ah) DRC Control 2	5:3	DRC_HI_COMP [2:0]	000	Compressor slope (upper region) 000 = 1 (no compression) 001 = 1/2 010 = 1/4 011 = 1/8 100 = 1/16 101 = 0 110 to 111 = Reserved
	2:0	DRC_LO_COMP [2:0]	000	Compressor slope (lower region) 000 = 1 (no compression) 001 = 1/2 010 = 1/4 011 = 1/8 100 = 0 101 to 111 = Reserved

Table 16 DRC Compression Control

GAIN LIMITS

The minimum and maximum gain applied by the DRC is set by register fields DRC_MINGAIN and DRC_MAXGAIN. These limits can be used to alter the DRC response from that illustrated in Figure 29. If the range between maximum and minimum gain is reduced, then the extent of the dynamic range control is reduced. The maximum gain prevents quiet signals (or silence) from being excessively amplified.

REGISTER ADDRESS	BIT	LABEL	DEFAULT	DESCRIPTION
R41 (29h) DRC Control 1	3:2	DRC_MINGAIN [1:0]	10	Minimum gain the DRC can use to attenuate audio signals 00 = 0dB (default) 01 = -6dB 10 = -12dB 11 = -18dB
	1:0	DRC_MAXGAIN [1:0]	00	Maximum gain the DRC can use to boost audio signals 00 = 12dB 01 = 18dB (default) 10 = 24dB 11 = 36dB

Table 17 DRC Gain Limits

DYNAMIC CHARACTERISTICS

The dynamic behaviour determines how quickly the DRC responds to changing signal levels. Note that the DRC responds to the average (RMS) signal amplitude over a period of time.

DRC_ATK determines how quickly the DRC gain decreases when the signal amplitude is high. DRC_DCY determines how quickly the DRC gain increases when the signal amplitude is low.

These register fields are described in Table 18. Note that the register defaults are suitable for general purpose microphone use.

REGISTER ADDRESS	BIT	LABEL	DEFAULT	DESCRIPTION
R41 (29h) DRC Control 1	15:12	DRC_ATK [3:0]	0011	Gain attack rate (seconds/6dB) 0000 = Reserved 0001 = 182µs 0010 = 363µs 0011 = 726µs (default) 0100 = 1.45ms 0101 = 2.9ms 0110 = 5.8ms 0111 = 11.6ms 1000 = 23.2ms 1001 = 46.4ms 1010 = 92.8ms 1011-1111 = Reserved
	11:8	DRC_DCY [3:0]	0010	Gain decay rate (seconds/6dB) 0000 = 186ms 0001 = 372ms 0010 = 743ms (default) 0011 = 1.49s 0100 = 2.97s 0101 = 5.94s 0110 = 11.89s 0111 = 23.78s 1000 = 47.56s 1001-1111 = Reserved

Table 18 DRC Attack and Decay Rates

Note:

For detailed information about DRC attack and decay rates, please see Application Note WAN0247.

ANTI-CLIP CONTROL

The DRC includes an Anti-Clip feature to avoid signal clipping when the input amplitude rises very quickly. This feature uses a feed-forward technique for early detection of a rising signal level. Signal clipping is avoided by dynamically increasing the gain attack rate when required. The Anti-Clip feature is enabled using the DRC_ANTICLIP bit.

Note that the feed-forward processing increases the latency in the input signal path. For low-latency applications (e.g. telephony), it may be desirable to reduce the delay, although this will also reduce the effectiveness of the anti-clip feature. The latency is determined by the DRC_FF_DELAY bit. If necessary, the latency can be minimised by disabling the anti-clip feature altogether.

The DRC Anti-Clip control bits are described in Table 19.

REGISTER ADDRESS	BIT	LABEL	DEFAULT	DESCRIPTION
R40 (28h) DRC Control 0	5	DRC_FF_DELAY	1	Feed-forward delay for anti-clip feature 0 = 5 samples 1 = 9 samples Time delay can be calculated as $5/f_s$ or $9/f_s$, where f_s is the sample rate.
	1	DRC_ANTICLIP	1	Anti-clip enable 0 = disabled 1 = enabled

Table 19 DRC Anti-Clip Control

Note that the Anti-Clip feature operates entirely in the digital domain. It cannot be used to prevent signal clipping in the analogue domain nor in the source signal. Analogue clipping can only be prevented by reducing the analogue signal gain or by adjusting the source signal.

QUICK RELEASE CONTROL

The DRC includes a Quick-Release feature to handle short transient peaks that are not related to the intended source signal. For example, in handheld microphone recording, transient signal peaks sometimes occur due to user handling, key presses or accidental tapping against the microphone. The Quick Release feature ensures that these transients do not cause the intended signal to be masked by the longer time constants of DRC_DCY.

The Quick-Release feature is enabled by setting the DRC_QR bit. When this bit is enabled, the DRC measures the crest factor (peak to RMS ratio) of the input signal. A high crest factor is indicative of a transient peak that may not be related to the intended source signal. If the crest factor exceeds the level set by DRC_QR_THR, then the normal decay rate (DRC_DCY) is ignored and a faster decay rate (DRC _QR_DCY) is used instead.

The DRC Quick-Release control bits are described in Table 20.

REGISTER ADDRESS	BIT	LABEL	DEFAULT	DESCRIPTION
R40 (28h) DRC Control 0	2	DRC_QR	1	Quick release enable 0 = disabled 1 = enabled
R41 (29h) DRC Control 1	7:6	DRC_QR_THR [1:0]	01	Quick release crest factor threshold 00 = 12dB 01 = 18dB (default) 10 = 24dB 11 = 30dB
	5:4	DRC_QR_DCY [1:0]	00	Quick release decay rate (seconds/6dB) 00 = 0.725ms (default) 01 = 1.45ms 10 = 5.8ms 11 = Reserved

Table 20 DRC Quick-Release Control

GAIN SMOOTHING

The DRC includes a gain smoothing filter in order to prevent gain ripples. A programmable level of hysteresis is also used to control the DRC gain. This improves the handling of very low frequency input signals whose period is close to the DRC attack/decay time. DRC Gain Smoothing is enabled by default and it is recommended to use the default register settings.

The extent of the gain smoothing filter may be adjusted or disabled using the control fields described in Table 21.

REGISTER ADDRESS	BIT	LABEL	DEFAULT	DESCRIPTION
R40 (28h) DRC Control 0	12:11	DRC_GS_HYST _LVL [1:0]	00	Gain smoothing hysteresis threshold 00 = Low 01 = Medium (recommended) 10 = High 11 = Reserved
	3	DRC_GS_ENA	1	Gain smoothing enable 0 = disabled 1 = enabled
	0	DRC_GS_HYST	1	Gain smoothing hysteresis enable 0 = disabled 1 = enabled

Table 21 DRC Gain Smoothing

INITIALISATION

When the DRC is initialised, the gain is set to the level determined by the DRC_STARTUP_GAIN register field. The default setting is 0dB, but values from -3dB to +6dB are available, as described in Table 22.

REGISTER ADDRESS	BIT	LABEL	DEFAULT	DESCRIPTION
R40 (28h) DRC Control 0	10:6	DRC_STARTUP_ GAIN [4:0]	00110	Initial gain at DRC start-up 00000 = -3dB 00001 = -2.5dB 00010 = -2dB 00011 = -1.5dB 00100 = -1dB 00101 = -0.5dB 00110 = 0dB (default) 00111 = 0.5dB 01000 = 1dB 01001 = 1.5dB 01010 = 2dB 01011 = 2.5dB 01100 = 3dB 01101 = 3.5dB 01110 = 4dB 01111 = 4.5dB 10000 = 5dB 10001 = 5.5dB 10010 = 6dB 10011 to 11111 = Reserved

Table 22 DRC Initialisation

RETUNE™ MOBILE PARAMETRIC EQUALIZER (EQ)

The ReTune™ Mobile Parametric Equaliser is a circuit that can be enabled in the DAC path. The function of the EQ is to adjust the frequency characteristic of the output to compensate for unwanted frequency characteristics in the loudspeaker (or other output transducer). It can also be used to tailor the response according to user preferences, for example to accentuate or attenuate specific frequency bands to emulate different sound profiles or environments such as concert hall, rock etc. The EQ is enabled using the EQ_ENA bit as shown in Table 23.

REGISTER ADDRESS	BIT	LABEL	DEFAULT	DESCRIPTION
R134 (86h) EQ1	0	EQ_ENA	0	EQ enable 0 = EQ disabled 1 = EQ enabled

Table 23 ReTune™ Mobile Parametric EQ Enable

The EQ can be configured to operate in two modes - "Default" mode or "ReTune™ Mobile" mode.

DEFAULT MODE (5-BAND PARAMETRIC EQ)

In default mode, the cut-off / centre frequencies are fixed as per Table 24. The filter bandwidths are also fixed in default mode. The gain of the individual bands (-12dB to +12dB) can be controlled as described in Table 25.

Note that the cut-off / centre frequencies noted in Table 24 are applicable to a DAC Sample Rate of 48kHz. When using other sample rates, these frequencies will be scaled in proportion to the selected sample rate.

EQ BAND	CUT-OFF/CENTRE FREQUENCY
1	100 Hz
2	300 Hz
3	875 Hz
4	2400 Hz
5	6900 Hz

Table 24 EQ Band Cut-off / Centre Frequencies

REGISTER ADDRESS	BIT	LABEL	DEFAULT	DESCRIPTION
R135 (87h) EQ2	4:0	EQ_B1_GAIN [4:0]	01100b (0dB)	EQ Band 1 Gain (see Table 26 for gain range)
R136 (88h) EQ3	4:0	EQ_B2_GAIN [4:0]	01100b (0dB)	EQ Band 2 Gain (see Table 26 for gain range)
R137 (89h) EQ4	4:0	EQ_B3_GAIN [4:0]	01100b (0dB)	EQ Band 3 Gain (see Table 26 for gain range)
R138 (8Ah) EQ5	4:0	EQ_B4_GAIN [4:0]	01100b (0dB)	EQ Band 4 Gain (see Table 26 for gain range)
R139 (8Bh) EQ6	4:0	EQ_B5_GAIN [4:0]	01100b (0dB)	EQ Band 5 Gain (see Table 26 for gain range)

Table 25 EQ Band Gain Control

EQ GAIN SETTING	GAIN (DB)
00000	-12
00001	-11
00010	-10
00011	-9
00100	-8
00101	-7
00110	-6
00111	-5
01000	-4
01001	-3
01010	-2
01011	-1
01100	0
01101	+1
01110	+2
01111	+3
10000	+4
10001	+5
10010	+6
10011	+7
10100	+8
10101	+9
10110	+10
10111	+11
11000	+12
11001 to 11111	Reserved

Table 26 EQ Gain Control

RETUNE™ MOBILE MODE

ReTune™ Mobile mode provides a comprehensive facility for the user to define the cut-off/centre frequencies and filter bandwidth for each EQ band, in addition to the gain controls already described. This enables the EQ to be accurately customised for a specific transducer characteristic or desired sound profile.

The EQ enable and EQ gain controls are the same as defined for the default mode. The additional coefficients used in ReTune™ Mobile mode are held in registers R140 to R157. These coefficients are derived using tools provided in the WISCE™ evaluation board control software.

Please contact your local Cirrus Logic representative for more details.

EQ FILTER CHARACTERISTICS

The filter characteristics for each frequency band are shown in Figure 30 to Figure 34. These figures show the frequency response for all available gain settings, using default cut-off/centre frequencies and bandwidth.

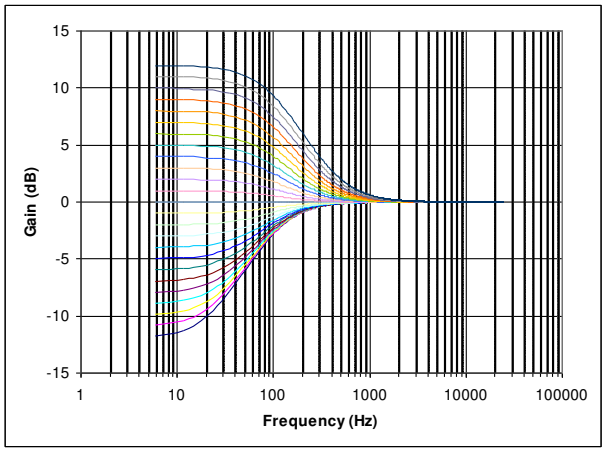

Figure 30 EQ Band 1 – Low Freq Shelf Filter Response

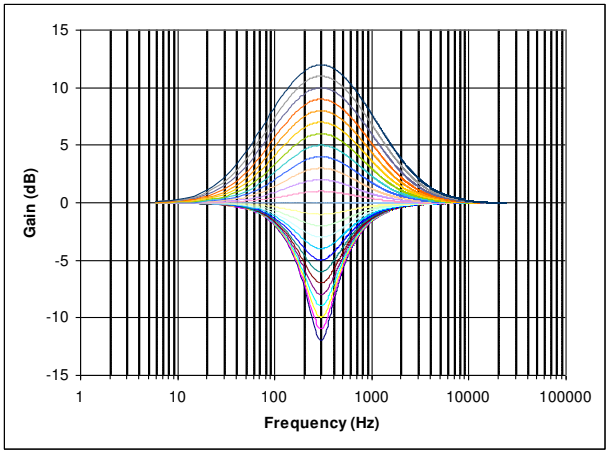

Figure 31 EQ Band 2 – Peak Filter Response

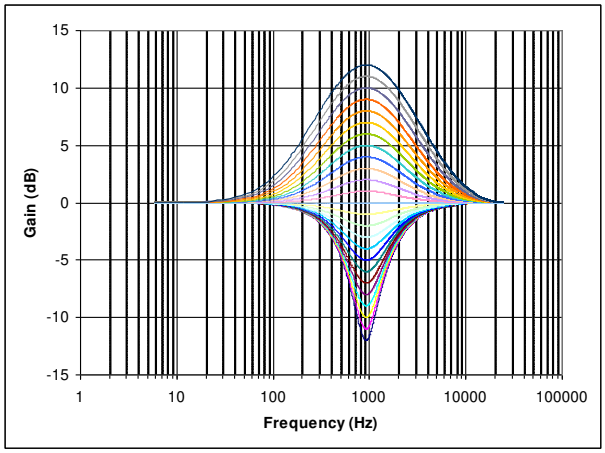

Figure 32 EQ Band 3 – Peak Filter Response

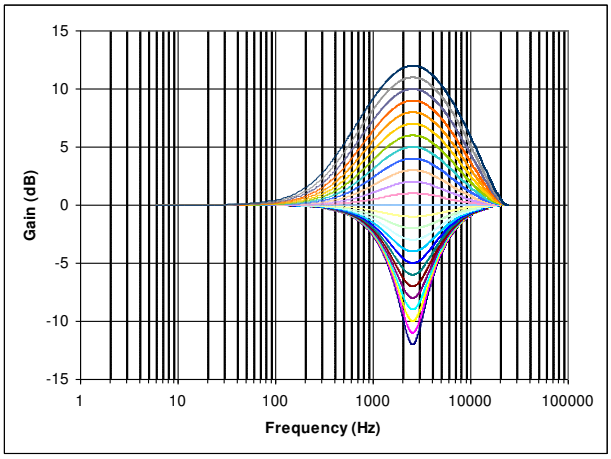

Figure 33 EQ Band 4 – Peak Filter Response

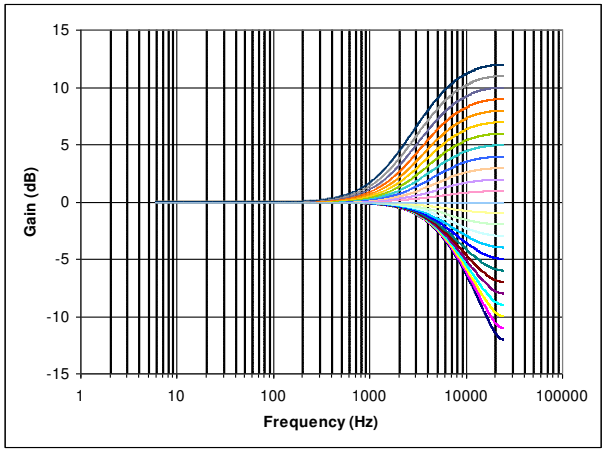

Figure 34 EQ Band 5 – High Freq Shelf Filter Response

DIGITAL MIXING

The ADC and DAC data can be combined in various ways to support a range of different usage modes.

Data from either of the two ADCs can be routed to either the left or the right channel of the digital audio interface. In addition, data from either of the digital audio interface channels can be routed to either the left or the right DAC. See "Digital Audio Interface" for more information on the audio interface.

The WM8904 provides a Dynamic Range Control (DRC) feature, which can apply compression and gain adjustment in the digital domain to either the ADC or DAC signal path. This is effective in controlling signal levels under conditions where input amplitude is unknown or varies over a wide range.

The DACs can be configured as a mono mix of the two audio channels. Digital sidetone from the ADCs can also be selectively mixed into the DAC output path.

DIGITAL MIXING PATHS

Figure 35 shows the digital mixing paths available in the WM8904 digital core.

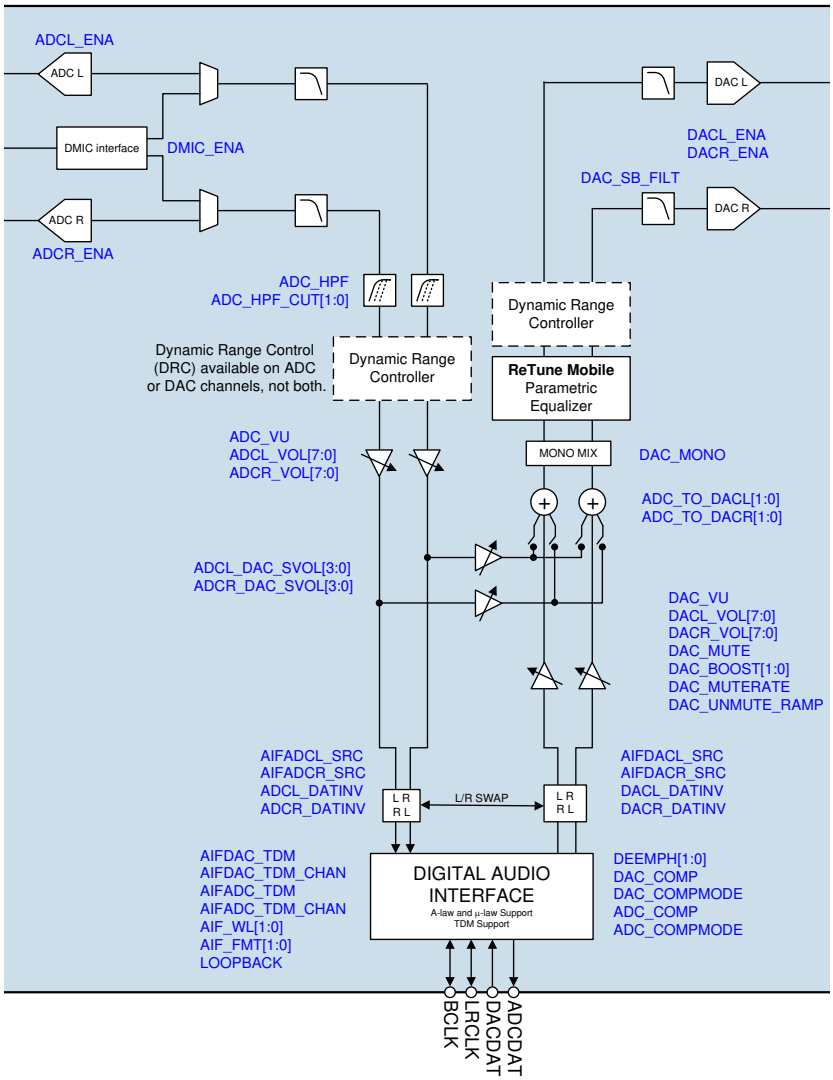

Figure 35 Digital Mixing Paths

The polarity of each ADC output signal can be changed under software control using the ADCL_DATINV and ADCR_DATINV register bits. The AIFADCL_SRC and AIFADCR_SRC register bits may be used to select which ADC is used for the left and right digital audio interface data. These register bits are described in Table 27.

REGISTER ADDRESS	BIT	LABEL	DEFAULT	DESCRIPTION
R24 (18h) Audio Interface 0	7	AIFADCL_SRC	0	Left Digital Audio interface source 0 = Left ADC data is output on left channel 1 = Right ADC data is output on left channel
	6	AIFADCR_SRC	1	Right Digital Audio interface source 0 = Left ADC data is output on right channel 1 = Right ADC data is output on right channel
R38 (26h) ADC Digital 0	1	ADCL_DATINV	0	Left ADC Invert 0 = Left ADC output not inverted 1 = Left ADC output inverted
	0	ADCR_DATINV	0	Right ADC Invert 0 = Right ADC output not inverted 1 = Right ADC output inverted

Table 27 ADC Routing and Control

The input data source for each DAC can be changed under software control using register bits AIFDACL_SRC and AIFDACR_SRC. The polarity of each DAC input may also be modified using register bits DACL_DATINV and DACR_DATINV. These register bits are described in Table 28.

REGISTER ADDRESS	BIT	LABEL	DEFAULT	DESCRIPTION
R24 (18h) Audio Interface 0	12	DACL_DATINV	0	Left DAC Invert 0 = Left DAC output not inverted 1 = Left DAC output inverted
	11	DACR_DATINV	0	Right DAC Invert 0 = Right DAC output not inverted 1 = Right DAC output inverted
	5	AIFDACL_SRC	0	Left DAC Data Source Select 0 = Left DAC outputs left interface data 1 = Left DAC outputs right interface data
	4	AIFDACR_SRC	1	Right DAC Data Source Select 0 = Right DAC outputs left interface data 1 = Right DAC outputs right interface data

Table 28 DAC Routing and Control

DAC INTERFACE VOLUME BOOST

A digital gain function is available at the audio interface to boost the DAC volume when a small signal is received on DACDAT. This is controlled using register bits DAC_BOOST [1:0]. To prevent clipping at the DAC input, this function should not be used when the boosted DAC data is expected to be greater than 0dBFS.

The digital interface volume is controlled as shown in Table 29.

REGISTER ADDRESS	BIT	LABEL	DEFAULT	DESCRIPTION
R24 (18h) Audio Interface 0	10:9	DAC_BOOST [1:0]	00	DAC Input Volume Boost 00 = 0dB 01 = +6dB (Input data must not exceed -6dBFS) 10 = +12dB (Input data must not exceed -12dBFS) 11 = +18dB (Input data must not exceed -18dBFS)

Table 29 DAC Interface Volume Boost

DIGITAL SIDETONE

A digital sidetone is available when ADCs and DACs are operating at the same sample rate. Digital data from either left or right ADC can be mixed with the audio interface data on the left and right DAC channels. Sidetone data is taken from the ADC high pass filter output, to reduce low frequency noise in the sidetone (e.g. wind noise or mechanical vibration).

When using the digital sidetone, it is recommended that the ADCs are enabled before un-muting the DACs to prevent pop noise. The DAC volumes and sidetone volumes should be set to an appropriate level to avoid clipping at the DAC input.

When digital sidetone is used, it is recommended that the Charge Pump operates in Register Control mode only (CP_DYN_PWR = 0). See “Charge Pump” for details.

The digital sidetone is controlled as shown in Table 30.

REGISTER ADDRESS	BIT	LABEL	DEFAULT	DESCRIPTION
R32 (20h) DAC Digital 0	11:8	ADCL_DAC_SVOL [3:0]	0000	Left Digital Sidetone Volume (See Table 31 for volume range)
	7:4	ADCR_DAC_SVOL [3:0]	0000	Right Digital Sidetone Volume (See Table 31 for volume range)
	3:2	ADC_TO_DACL [1:0]	00	Left DAC Digital Sidetone Source 00 = No sidetone 01 = Left ADC 10 = Right ADC 11 = Reserved
	1:0	ADC_TO_DACR [1:0]	00	Right DAC Digital Sidetone Source 00 = No sidetone 01 = Left ADC 10 = Right ADC 11 = Reserved

Table 30 Digital Sidetone Control

The digital sidetone volume settings are shown in Table 31.

ADCL_DAC_SVOL OR ADCR_DAC_SVOL	SIDETONE VOLUME
0000	-36
0001	-33
0010	-30
0011	-27
0100	-24
0101	-21
0110	-18
0111	-15
1000	-12
1001	-9
1010	-6
1011	-3
1100	0
1101	0
1110	0
1111	0

Table 31 Digital Sidetone Volume

DIGITAL-TO-ANALOGUE CONVERTER (DAC)

The WM8904 DACs receive digital input data from the DACDAT pin and via the digital sidetone path (see "Digital Mixing" section). The digital audio data is converted to oversampled bit streams in the on-chip, true 24-bit digital interpolation filters. The bitstream data enters two multi-bit, sigma-delta DACs, which convert them to high quality analogue audio signals. The Wolfson SmartDAC™ architecture offers reduced power consumption, whilst also delivering a reduction in high frequency noise and sensitivity to clock jitter. It also uses a Dynamic Element Matching technique for high linearity and low distortion.

The analogue outputs from the DACs are sent directly to the output PGAs (see "Output Signal Path").

The DACs are enabled by the DACL_ENA and DACR_ENA register bits.

REGISTER ADDRESS	BIT	LABEL	DEFAULT	DESCRIPTION
R18 (12h) Power Management 6	3	DACL_ENA	0	Left DAC Enable 0 = DAC disabled 1 = DAC enabled
	2	DACR_ENA	0	Right DAC Enable 0 = DAC disabled 1 = DAC enabled

Table 32 DAC Enable Control

DAC DIGITAL VOLUME CONTROL

The output level of each DAC can be controlled digitally over a range from -71.625dB to 0dB in 0.375dB steps. The level of attenuation for an eight-bit code is detailed in Table 34.

The DAC_VU bit controls the loading of digital volume control data. When DAC_VU is set to 0, the DACL_VOL or DACR_VOL control data is loaded into the respective control register, but does not actually change the digital gain setting. Both left and right gain settings are updated when a 1 is written to DAC_VU. This makes it possible to update the gain of both channels simultaneously.

REGISTER ADDRESS	BIT	LABEL	DEFAULT	DESCRIPTION
R30 (1Eh) DAC Digital Volume Left	8	DAC_VU	N/A	DAC Volume Update Writing a 1 to this bit causes left and right DAC volume to be updated simultaneously
	7:0	DACL_VOL [7:0]	1100_0000 (0dB)	Left DAC Digital Volume 00h = Mute 01h = -71.625dB 02h = -71.250dB … (0.375dB steps) C0h to FFh = 0dB (See Table 34 for volume range)
R31 (1Fh) DAC Digital Volume Right	8	DAC_VU	N/A	DAC Volume Update Writing a 1 to this bit causes left and right DAC volume to be updated simultaneously
	7:0	DACR_VOL [7:0]	1100_0000 (0dB)	Right DAC Digital Volume 00h = Mute 01h = -71.625dB 02h = -71.250dB … (0.375dB steps) C0h to FFh = 0dB (See Table 34 for volume range)

Table 33 DAC Digital Volume Control

DACL_VOL or DACR_VOL	Volume (dB)	DACL_VOL or DACR_VOL	Volume (dB)	DACL_VOL or DACR_VOL	Volume (dB)	DACL_VOL or DACR_VOL	Volume (dB)
0h	MUTE	40h	-48.000	80h	-24.000	C0h	0.000
1h	-71.625	41h	-47.625	81h	-23.625	C1h	0.000
2h	-71.250	42h	-47.250	82h	-23.250	C2h	0.000
3h	-70.875	43h	-46.875	83h	-22.875	C3h	0.000
4h	-70.500	44h	-46.500	84h	-22.500	C4h	0.000
5h	-70.125	45h	-46.125	85h	-22.125	C5h	0.000
6h	-69.750	46h	-45.750	86h	-21.750	C6h	0.000
7h	-69.375	47h	-45.375	87h	-21.375	C7h	0.000
8h	-69.000	48h	-45.000	88h	-21.000	C8h	0.000
9h	-68.625	49h	-44.625	89h	-20.625	C9h	0.000
Ah	-68.250	4Ah	-44.250	8Ah	-20.250	CAh	0.000
Bh	-67.875	4Bh	-43.875	8Bh	-19.875	CBh	0.000
Ch	-67.500	4Ch	-43.500	8Ch	-19.500	CCh	0.000
Dh	-67.125	4Dh	-43.125	8Dh	-19.125	CDh	0.000
Eh	-66.750	4Eh	-42.750	8Eh	-18.750	CEh	0.000
Fh	-66.375	4Fh	-42.375	8Fh	-18.375	CFh	0.000
10h	-66.000	50h	-42.000	90h	-18.000	D0h	0.000
11h	-65.625	51h	-41.625	91h	-17.625	D1h	0.000
12h	-65.250	52h	-41.250	92h	-17.250	D2h	0.000
13h	-64.875	53h	-40.875	93h	-16.875	D3h	0.000
14h	-64.500	54h	-40.500	94h	-16.500	D4h	0.000
15h	-64.125	55h	-40.125	95h	-16.125	D5h	0.000
16h	-63.750	56h	-39.750	96h	-15.750	D6h	0.000
17h	-63.375	57h	-39.375	97h	-15.375	D7h	0.000
18h	-63.000	58h	-39.000	98h	-15.000	D8h	0.000
19h	-62.625	59h	-38.625	99h	-14.625	D9h	0.000
1Ah	-62.250	5Ah	-38.250	9Ah	-14.250	DAh	0.000
1Bh	-61.875	5Bh	-37.875	9Bh	-13.875	DBh	0.000
1Ch	-61.500	5Ch	-37.500	9Ch	-13.500	DCh	0.000
1Dh	-61.125	5Dh	-37.125	9Dh	-13.125	DDh	0.000
1Eh	-60.750	5Eh	-36.750	9Eh	-12.750	DEh	0.000
1Fh	-60.375	5Fh	-36.375	9Fh	-12.375	DFh	0.000
20h	-60.000	60h	-36.000	A0h	-12.000	E0h	0.000
21h	-59.625	61h	-35.625	A1h	-11.625	E1h	0.000
22h	-59.250	62h	-35.250	A2h	-11.250	E2h	0.000
23h	-58.875	63h	-34.875	A3h	-10.875	E3h	0.000
24h	-58.500	64h	-34.500	A4h	-10.500	E4h	0.000
25h	-58.125	65h	-34.125	A5h	-10.125	E5h	0.000
26h	-57.750	66h	-33.750	A6h	-9.750	E6h	0.000
27h	-57.375	67h	-33.375	A7h	-9.375	E7h	0.000
28h	-57.000	68h	-33.000	A8h	-9.000	E8h	0.000
29h	-56.625	69h	-32.625	A9h	-8.625	E9h	0.000
2Ah	-56.250	6Ah	-32.250	AAh	-8.250	EAh	0.000
2Bh	-55.875	6Bh	-31.875	ABh	-7.875	EBh	0.000
2Ch	-55.500	6Ch	-31.500	ACh	-7.500	ECh	0.000
2Dh	-55.125	6Dh	-31.125	ADh	-7.125	EDh	0.000
2Eh	-54.750	6Eh	-30.750	AEh	-6.750	EEh	0.000
2Fh	-54.375	6Fh	-30.375	AFh	-6.375	EFh	0.000
30h	-54.000	70h	-30.000	B0h	-6.000	F0h	0.000
31h	-53.625	71h	-29.625	B1h	-5.625	F1h	0.000
32h	-53.250	72h	-29.250	B2h	-5.250	F2h	0.000
33h	-52.875	73h	-28.875	B3h	-4.875	F3h	0.000
34h	-52.500	74h	-28.500	B4h	-4.500	F4h	0.000
35h	-52.125	75h	-28.125	B5h	-4.125	F5h	0.000
36h	-51.750	76h	-27.750	B6h	-3.750	F6h	0.000
37h	-51.375	77h	-27.375	B7h	-3.375	F7h	0.000
38h	-51.000	78h	-27.000	B8h	-3.000	F8h	0.000
39h	-50.625	79h	-26.625	B9h	-2.625	F9h	0.000
3Ah	-50.250	7Ah	-26.250	BAh	-2.250	FAh	0.000
3Bh	-49.875	7Bh	-25.875	BBh	-1.875	FBh	0.000
3Ch	-49.500	7Ch	-25.500	BCh	-1.500	FCh	0.000
3Dh	-49.125	7Dh	-25.125	BDh	-1.125	FDh	0.000
3Eh	-48.750	7Eh	-24.750	BEh	-0.750	FEh	0.000
3Fh	-48.375	7Fh	-24.375	BFh	-0.375	FFh	0.000

Table 34 DAC Digital Volume Range

DAC SOFT MUTE AND SOFT UN-MUTE

The WM8904 has a soft mute function. When enabled, this gradually attenuates the volume of the DAC output. When soft mute is disabled, the gain will either gradually ramp back up to the digital gain setting, or return instantly to the digital gain setting, depending on the DAC_UNMUTE_RAMP register bit.

To mute the DAC, this function must be enabled by setting DAC_MUTE to 1.

Soft Mute Mode would typically be enabled (DAC_UNMUTE_RAMP = 1) when using DAC_MUTE during playback of audio data so that when DAC_MUTE is subsequently disabled, the sudden volume increase will not create pop noise by jumping immediately to the previous volume level (e.g. resuming playback after pausing during a track).

Soft Mute Mode would typically be disabled (DAC_UNMUTE_RAMP = 0) when un-muting at the start of a music file, in order that the first part of the track is not attenuated (e.g. when starting playback of a new track, or resuming playback after pausing between tracks).

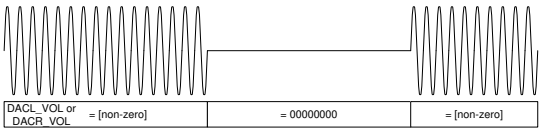	DAC muting and un-muting using volume control bits DACL_VOL and DACR_VOL.
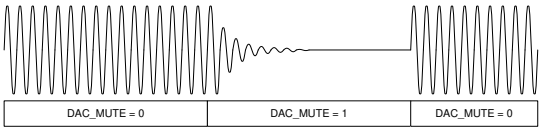	DAC muting and un-muting using the DAC_MUTE bit. If soft Mute Mode is not enabled (DAC_UNMUTE_RAMP = 0): Setting the DAC_MUTE bit causes the volume to ramp down at a rate controlled by DAC_MUTERATE. Clearing the DAC_MUTE bit causes the volume to return to the un-muted level immediately.
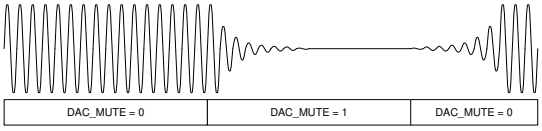	DAC muting and un-muting using the DAC_MUTE bit. If soft Mute Mode is enabled (DAC_UNMUTE_RAMP = 1): Setting the DAC_MUTE bit causes the volume to ramp down. Clearing the DAC_MUTE bit causes the volume to ramp up to the un-muted level at a rate controlled by DAC_MUTERATE.

Figure 36 DAC Mute Control

The volume ramp rate during soft mute and un-mute is controlled by the DAC_MUTERATE bit. Ramp rates of fs/32 and fs/2 can be selected, as shown in Table 35. The ramp rate determines the rate at which the volume is increased or decreased. The actual ramp time depends on the extent of the difference between the muted and un-muted volume settings.

REGISTER ADDRESS	BIT	LABEL	DEFAULT	DESCRIPTION
R33 (21h) DAC Digital 1	10	DAC_MUTERATE	0	DAC Soft Mute Ramp Rate 0 = Fast ramp (fs/2, maximum ramp time is 10.7ms at fs=48k) 1 = Slow ramp (fs/32, maximum ramp time is 171ms at fs=48k)
	9	DAC_UNMUTE_RAMP	0	DAC Soft Mute Mode 0 = Disabling soft-mute (DAC_MUTE=0) will cause the DAC volume to change immediately to DACL_VOL and DACR_VOL settings 1 = Disabling soft-mute (DAC_MUTE=0) will cause the DAC volume to ramp up gradually to the DACL_VOL and DACR_VOL settings
	3	DAC_MUTE	1	DAC Soft Mute Control 0 = DAC Un-mute 1 = DAC Mute

Table 35 DAC Soft-Mute Control

DAC MONO MIX

A DAC digital mono-mix mode can be enabled using the DAC_MONO register bit. This mono mix will be output on whichever DAC is enabled. To prevent clipping, a -6dB attenuation is automatically applied to the mono mix.

The mono mix is only supported when one or other DAC is disabled. When the mono mix is selected, then the mono mix is output on the enabled DAC only; there is no output from the disabled DAC. If DACL_ENA and DACR_ENA are both set, then stereo operation applies.

REGISTER ADDRESS	BIT	LABEL	DEFAULT	DESCRIPTION
R33 (21h) DAC Digital 1	12	DAC_MONO	0	DAC Mono Mix 0 = Stereo 1 = Mono (Mono mix output on enabled DAC)

Table 36 DAC Mono Mix

DAC DE-EMPHASIS

Digital de-emphasis can be applied to the DAC playback data (e.g. when the data comes from a CD with pre-emphasis used in the recording). De-emphasis filtering is available for sample rates of 48kHz, 44.1kHz and 32kHz. See “Digital Filter Characteristics” for details of de-emphasis filter characteristics.

REGISTER ADDRESS	BIT	LABEL	DEFAULT	DESCRIPTION
R33 (21h) DAC Digital 1	2:1	DEEMPH [1:0]	00	DAC De-Emphasis Control 00 = No de-emphasis 01 = 32kHz sample rate 10 = 44.1kHz sample rate 11 = 48kHz sample rate

Table 37 DAC De-Emphasis Control

DAC SLOPING STOPBAND FILTER

Two DAC filter types are available, selected by the register bit DAC_SB_FILT. When operating at sample rates <= 24kHz (eg. during voice communication) it is recommended that the sloping stopband filter type is selected (DAC_SB_FILT=1) to reduce out-of-band noise which can be audible at low DAC sample rates. See "Digital Filter Characteristics" for details of DAC filter characteristics.

REGISTER ADDRESS	BIT	LABEL	DEFAULT	DESCRIPTION
R33 (21h) DAC Digital 1	11	DAC_SB_FILT	0	Selects DAC filter characteristics 0 = Normal mode 1 = Sloping stopband mode (recommended when fs <= 24kHz)

Table 38 DAC Sloping Stopband Filter

DAC OVERSAMPLING RATIO (OSR)

The DAC oversampling rate is programmable to allow power consumption versus audio performance trade-offs. The default oversampling rate is low for reduced power consumption; using the higher OSR setting improves the DAC signal-to-noise performance.

REGISTER ADDRESS	BIT	LABEL	DEFAULT	DESCRIPTION
R33 (21h) DAC Digital 1	6	DAC_OSR128	0	DAC Oversample Rate Select 0 = Low power (normal OSR) 1 = High performance (double OSR)

Table 39 DAC Oversampling Control

OUTPUT SIGNAL PATH

The outputs HPOUTL and LINEOUTL are normally derived from the Left DAC output, whilst the outputs HPOUTR and LINEOUTR are normally derived from the Right DAC output, as illustrated in Figure 37. A multiplexer is provided on each output path to select the BYPASSL or BYPASSR analogue input signals in place of the DAC outputs.

A feedback path for common mode noise rejection is provided at HPOUTFB and LINEOUTFB for the Headphone and Line outputs respectively. This pin must be connected to ground for normal operation.

Each analogue output can be separately enabled; independent volume control is also provided for each output. The output signal paths and associated control registers are illustrated in Figure 37. See "Analogue Outputs" for details of the external connections to these outputs.

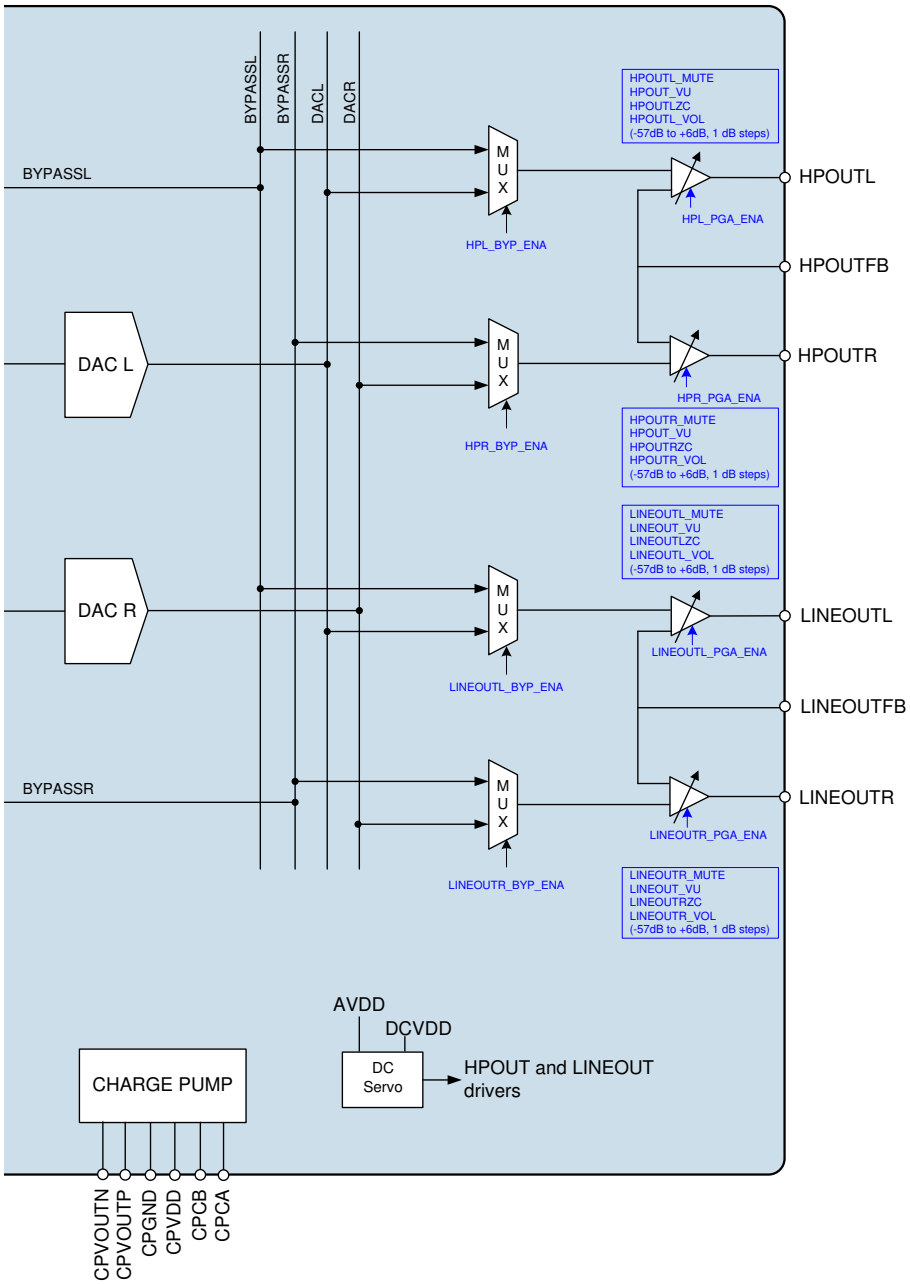

Figure 37 Output Signal Path and Control Registers

OUTPUT SIGNAL PATHS ENABLE

The output PGAs for each analogue output pin can be enabled and disabled using the register bits described in Table 40.

Note that the Headphone Outputs and Line Outputs are also controlled by fields located within Register R90 and R94, which provide suppression of pops & clicks when enabling and disabling these signal paths. These registers are described in the following "Headphone / Line Output Signal Paths Enable" section.

Under recommended usage conditions, all the control bits associated with enabling the Headphone Outputs and the Line Outputs will be configured by scheduling the default Start-Up and Shutdown sequences as described in the "Control Write Sequencer" section. In these cases, the user does not need to set the register fields in R14, R15, R90 and R94 directly.

REGISTER ADDRESS	BIT	LABEL	DEFAULT	DESCRIPTION
R14 (0Eh) Power Management 2	1	HPL_PGA_ENA	0	Left Headphone Output Enable 0 = disabled 1 = enabled
	0	HPR_PGA_ENA	0	Right Headphone Output Enable 0 = disabled 1 = enabled
R15 (0Fh) Power Management 3	1	LINEOUTL_PGA_ENA	0	Left Line Output Enable 0 = disabled 1 = enabled
	0	LINEOUTR_PGA_ENA	0	Right Line Output Enable 0 = disabled 1 = enabled

Table 40 Output Signal Paths Enable

To enable the output PGAs and multiplexers, the reference voltage VMID and the bias current must also be enabled. See "Reference Voltages and Master Bias" for details of the associated controls VMID_RES and BIAS_ENA.

HEADPHONE / LINE OUTPUT SIGNAL PATHS ENABLE

The output paths can be actively discharged to AGND through internal resistors if desired. This is desirable at start-up in order to achieve a known output stage condition prior to enabling the VMID reference voltage. This is also desirable in shutdown to prevent the external connections from being affected by the internal circuits. The ground-referenced Headphone outputs and Line outputs are shorted to AGND by default; the short circuit is removed on each of these paths by setting the applicable fields HPL_RMV_SHORT, HPR_RMV_SHORT, LINEOUTL_RMV_SHORT or LINEOUTR_RMV_SHORT.

The ground-referenced Headphone output and Line output drivers are designed to suppress pops and clicks when enabled or disabled. However, it is necessary to control the drivers in accordance with a defined sequence in start-up and shutdown to achieve the pop suppression. It is also necessary to schedule the DC Servo offset correction at the appropriate point in the sequence (see "DC Servo"). Table 41 and Table 42 describe the recommended sequences for enabling and disabling these output drivers.

SEQUENCE	HEADPHONE ENABLE	LINEOUT ENABLE
Step 1	HPL_ENA = 1 HPR_ENA = 1	LINEOUTL_ENA = 1 LINEOUTR_ENA = 1
Step 2	HPL_ENA_DLY = 1 HPR_ENA_DLY = 1	LINEOUTL_ENA_DLY = 1 LINEOUTR_ENA_DLY = 1
Step 3	DC offset correction	DC offset correction
Step 4	HPL_ENA_OUTP = 1 HPR_ENA_OUTP = 1	LINEOUTL_ENA_OUTP = 1 LINEOUTR_ENA_OUTP = 1
Step 5	HPL_RMV_SHORT = 1 HPR_RMV_SHORT = 1	LINEOUTL_RMV_SHORT = 1 LINEOUTR_RMV_SHORT = 1

Table 41 Headphone / Line Output Enable Sequence

SEQUENCE	HEADPHONE DISABLE	LINEOUT DISABLE
Step 1	HPL_RMV_SHORT = 0 HPR_RMV_SHORT = 0	LINEOUTL_RMV_SHORT = 0 LINEOUTR_RMV_SHORT = 0
Step 2	HPL_ENA = 0 HPL_ENA_DLY = 0 HPL_ENA_OUTP = 0 HPR_ENA = 0 HPR_ENA_DLY = 0 HPR_ENA_OUTP = 0	LINEOUTL_ENA = 0 LINEOUTL_ENA_DLY = 0 LINEOUTL_ENA_OUTP = 0 LINEOUTR_ENA = 0 LINEOUTR_ENA_DLY = 0 LINEOUTR_ENA_OUTP = 0

Table 42 Headphone / Line Output Disable Sequence

The registers relating to Headphone / Line Output pop suppression control are defined in Table 43.

REGISTER ADDRESS	BIT	LABEL	DEFAULT	DESCRIPTION
R90 (5Ah) Analogue HP 0	7	HPL_RMV_SHORT	0	Removes HPL short 0 = HPL short enabled 1 = HPL short removed For normal operation, this bit should be set as the final step of the HPL Enable sequence.
	6	HPL_ENA_OUTP	0	Enables HPL output stage 0 = Disabled 1 = Enabled For normal operation, this bit should be set to 1 after the DC offset cancellation has been scheduled.
	5	HPL_ENA_DLY	0	Enables HPL intermediate stage 0 = Disabled 1 = Enabled For normal operation, this bit should be set to 1 after the output signal path has been configured, and before DC offset cancellation is scheduled. This bit should be set with at least 20us delay after HPL_ENA.
	4	HPL_ENA	0	Enables HPL input stage 0 = Disabled 1 = Enabled For normal operation, this bit should be set as the first step of the HPL Enable sequence.

REGISTER ADDRESS	BIT	LABEL	DEFAULT	DESCRIPTION
	3	HPR_RMV_SHORT	0	Removes HPR short 0 = HPR short enabled 1 = HPR short removed For normal operation, this bit should be set as the final step of the HPR Enable sequence.
	2	HPR_ENA_OUTP	0	Enables HPR output stage 0 = Disabled 1 = Enabled For normal operation, this bit should be set to 1 after the DC offset cancellation has been scheduled.
	1	HPR_ENA_DLY	0	Enables HPR intermediate stage 0 = Disabled 1 = Enabled For normal operation, this bit should be set to 1 after the output signal path has been configured, and before DC offset cancellation is scheduled. This bit should be set with at least 20us delay after HPR_ENA.
	0	HPR_ENA	0	Enables HPR input stage 0 = Disabled 1 = Enabled For normal operation, this bit should be set as the first step of the HPR Enable sequence.
R94 (5Eh) Analogue Lineout 0	7	LINEOUTL_RMV_SHORT	0	Removes LINEOUTL short 0 = LINEOUTL short enabled 1 = LINEOUTL short removed For normal operation, this bit should be set as the final step of the LINEOUTL Enable sequence.
	6	LINEOUTL_ENA_OUTP	0	Enables LINEOUTL output stage 0 = Disabled 1 = Enabled For normal operation, this bit should be set to 1 after the DC offset cancellation has been scheduled.
	5	LINEOUTL_ENA_DLY	0	Enables LINEOUTL intermediate stage 0 = Disabled 1 = Enabled For normal operation, this bit should be set to 1 after the output signal path has been configured, and before DC offset cancellation is scheduled. This bit should be set with at least 20us delay after LINEOUTL_ENA.
	4	LINEOUTL_ENA	0	Enables LINEOUTL input stage 0 = Disabled 1 = Enabled For normal operation, this bit should be set as the first step of the LINEOUTL Enable sequence.

REGISTER ADDRESS	BIT	LABEL	DEFAULT	DESCRIPTION
	3	LINEOUTR_RMV_SHORT	0	Removes LINEOUTR short 0 = LINEOUTR short enabled 1 = LINEOUTR short removed For normal operation, this bit should be set as the final step of the LINEOUTR Enable sequence.
	2	LINEOUTR_ENA_OUTP	0	Enables LINEOUTR output stage 0 = Disabled 1 = Enabled For normal operation, this bit should be set to 1 after the DC offset cancellation has been scheduled.
	1	LINEOUTR_ENA_DLY	0	Enables LINEOUTR intermediate stage 0 = Disabled 1 = Enabled For normal operation, this bit should be set to 1 after the output signal path has been configured, and before DC offset cancellation is scheduled. This bit should be set with at least 20us delay after LINEOUTR_ENA.
	0	LINEOUTR_ENA	0	Enables LINEOUTR input stage 0 = Disabled 1 = Enabled For normal operation, this bit should be set as the first step of the LINEOUTR Enable sequence.

Table 43 Headphone / Line Output Pop Suppression Control

OUTPUT MUX CONTROL

By default, the DAC outputs are routed directly to the respective output PGAs. A multiplexer (mux) is provided on each output path to select the BYPASSL or BYPASSR analogue signals from the Left/Right Input PGAs in place of the DAC outputs.

The output multiplexers are configured using the register bits described in Table 44.

REGISTER ADDRESS	BIT	LABEL	DEFAULT	DESCRIPTION
R61 (3Dh) Analogue OUT12 ZC	3	HPL_BYP_ENA	0	Selects input for left headphone output MUX 0 = Left DAC 1 = Left input PGA (Analogue bypass)
	2	HPR_BYP_ENA	0	Selects input for right headphone output MUX 0 = Right DAC 1 = Right input PGA (Analogue bypass)
	1	LINEOUTL_BYP_ENA	0	Selects input for left line output MUX 0 = Left DAC 1 = Left input PGA (Analogue bypass)

REGISTER ADDRESS	BIT	LABEL	DEFAULT	DESCRIPTION
	0	LINEOUTR_BYP_ ENA	0	Selects input for right line output MUX 0 = Right DAC 1 = Right input PGA (Analogue bypass)

Table 44 Output Mux Control

OUTPUT VOLUME CONTROL

Each analogue output can be independently controlled. The headphone output control fields are described in Table 45. The line output control fields are described in Table 46. The output pins are described in more detail in "Analogue Outputs".

The volume and mute status of each output can be controlled individually using the bit fields shown in Table 45 and Table 46.

To prevent "zipper noise" when a volume adjustment is made, a zero-cross function is provided on all output paths. When this function is enabled, volume updates will not take place until a zero-crossing is detected. In the event of a long period without zero-crossings, a timeout will apply. The timeout must be enabled by setting the TOCLK_ENA bit, as defined in "Clocking and Sample Rates".

The volume update bits control the loading of the output driver volume data. For example, when HPOUT_VU is set to 0, the headphone volume data can be loaded into the respective control register, but will not actually change the gain setting. The Left and Right headphone volume settings are updated when a 1 is written to HPOUT_VU. This makes it possible to update the gain of a Left/Right pair of output paths simultaneously.

REGISTER ADDRESS	BIT	LABEL	DEFAULT	DESCRIPTION
R57 (39h) Analogue OUT1 Left	8	HPOUTL_MUTE	0	Left Headphone Output Mute 0 = Un-mute 1 = Mute
	7	HPOUT_VU	0	Headphone Output Volume Update Writing a 1 to this bit will update HPOUTL and HPOUTR volumes simultaneously.
	6	HPOUTLZC	0	Left Headphone Output Zero Cross Enable 0 = disabled 1 = enabled
	5:0	HPOUTL_VOL [5:0]	10_1101	Left Headphone Output Volume 000000 = -57dB 000001 = -56dB (… 1dB steps) 111001 = 0dB (… 1dB steps) 111110 = +5dB 111111 = +6dB

REGISTER ADDRESS	BIT	LABEL	DEFAULT	DESCRIPTION
R58 (3Ah) Analogue OUT1 Right	8	HPOUTR_MUTE	0	Right Headphone Output Mute 0 = Un-mute 1 = Mute
	7	HPOUT_VU	0	Headphone Output Volume Update Writing a 1 to this bit will update HPOUTL and HPOUTR volumes simultaneously.
	6	HPOUTRZC	0	Right Headphone Output Zero Cross Enable 0 = disabled 1 = enabled
	5:0	HPOUTR_VOL [5:0]	10_1101	Right Headphone Output Volume 000000 = -57dB 000001 = -56dB (… 1dB steps) 111001 = 0dB (… 1dB steps) 111110 = +5dB 111111 = +6dB

Table 45 Volume Control for HPOUTL and HPOUTR

REGISTER ADDRESS	BIT	LABEL	DEFAULT	DESCRIPTION
R59 (3Bh) Analogue OUT2 Left	8	LINEOUTL_MUTE	0	Left Line Output Mute 0 = Un-mute 1 = Mute
	7	LINEOUT_VU	0	Line Output Volume Update Writing a 1 to this bit will update LINEOUTL and LINEOUTR volumes simultaneously.
	6	LINEOUTLZC	0	Left Line Output Zero Cross Enable 0 = disabled 1 = enabled
	5:0	LINEOUTL_VOL [5:0]	11_1001	Left Line Output Volume 000000 = -57dB 000001 = -56dB (… 1dB steps) 111001 = 0dB (… 1dB steps) 111110 = +5dB 111111 = +6dB
R60 (3Ch) Analogue OUT2 Right	8	LINEOUTR_MUTE	0	Right Line Output Mute 0 = Un-mute 1 = Mute
	7	LINEOUT_VU	0	Line Output Volume Update Writing a 1 to this bit will update LINEOUTL and LINEOUTR volumes simultaneously.
	6	LINEOUTRZC	0	Right Line Output Zero Cross Enable 0 = disabled 1 = enabled

REGISTER ADDRESS	BIT	LABEL	DEFAULT	DESCRIPTION
	5:0	LINEOUTR_VOL [5:0]	11_1001	Right Line Output Volume 000000 = -57dB 000001 = -56dB (… 1dB steps) 111001 = 0dB (… 1dB steps) 111110 = +5dB 111111 = +6dB

Table 46 Volume Control for LINEOUTL and LINEOUTR

ANALOGUE OUTPUTS

The WM8904 has four analogue output pins:

- Headphone outputs, HPOUTL and HPOUTR, with feedback HPOUTFB
- Line outputs, LINEOUTL and LINEOUTR, with feedback LINEOUTFB

The output signal paths and associated control registers are illustrated in Figure 37.

HEADPHONE OUTPUTS – HPOUTL AND HPOUTR

The headphone outputs are designed to drive 16Ω or 32Ω headphones. These outputs are ground-referenced, i.e. no series capacitor is required between the pins and the headphone load. They are powered by an on-chip charge pump (see "Charge Pump" section). Signal volume at the headphone outputs is controlled as shown in Table 45.

The ground-referenced outputs incorporates a common mode, or ground loop, feedback path which provides rejection of system-related ground noise. The return path for the HPOUTL and HPOUTR outputs is via HPOUTFB. This pin must be connected to ground for normal operation of the headphone output. No register configuration is required.

LINE OUTPUTS – LINEOUTL AND LINEOUTR

The line outputs are identical to the headphone outputs in design. They are ground-referenced and powered by the on-chip charge pump. Signal volume at the line outputs is controlled as shown in Table 46.

Note that these outputs are intended for driving line loads, as the charge pump powering both the Headphone and Line outputs can only provide sufficient power to drive one set of headphones at any given time.

The ground-referenced outputs incorporates a common mode, or ground loop, feedback path which provides rejection of system-related ground noise. The return path for the LINEOUTL and LINEOUTR outputs is via LINEOUTFB. This pin must be connected to ground for normal operation of the line output. No register configuration is required.

EXTERNAL COMPONENTS FOR GROUND REFERENCED OUTPUTS

It is recommended to connect a zobel network to the ground-referenced outputs HPOUTL, HPOUTR, LINEOUTL and LINEOUTR in order to ensure best audio performance in all applications. The components of the zobel network have the effect of dampening high frequency oscillations or instabilities that can arise outside the audio band under certain conditions. Possible sources of these instabilities include the inductive load of a headphone coil or an active load in the form of an external line amplifier. The capacitance of lengthy cables or PCB tracks can also lead to amplifier instability. The zobel network should comprise a 20Ω resistor and 100nF capacitor in series with each other, as illustrated in Figure 38.

Note that the zobel network is recommended for best audio quality and amplifier stability in all cases.

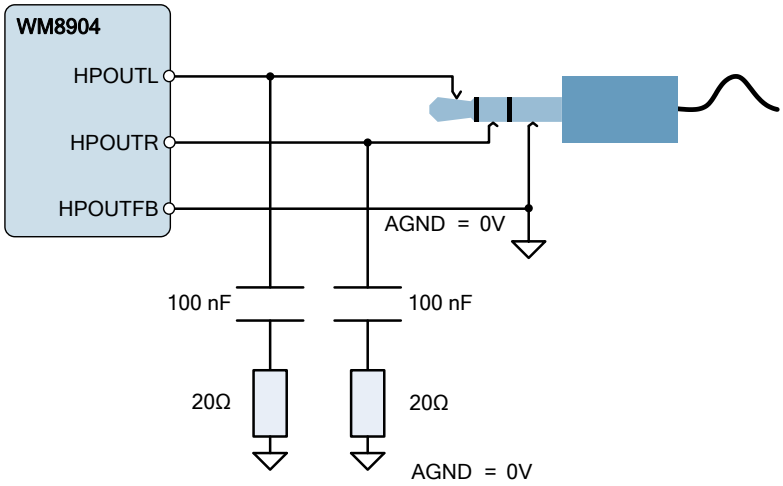

Figure 38 Zobel Network Components for HPOUTL, HPOUTR, LINEOUTL and LINEOUTR

REFERENCE VOLTAGES AND MASTER BIAS

This section describes the analogue reference voltage and bias current controls. Note that, under the recommended usage conditions of the WM8904, these features will be configured by scheduling the default Start-Up and Shutdown sequences as described in the “Control Write Sequencer” section. In these cases, the user does not need to set these register fields directly.

ANALOGUE REFERENCE AND MASTER BIAS

The analogue circuits in the WM8904 require a mid-rail analogue reference voltage, VMID. This reference is generated from AVDD via a programmable resistor chain.

VMID is enabled by setting the VMID_ENA register bit. The programmable resistor chain is configured by VMID_RES [1:0], and can be used to optimise the reference for normal operation, low power standby or for fast start-up as described in Table 47. For normal operation, the VMID_RES field should be set to 01.

The VMID_BUF_ENA bit allows the buffered VMID reference to be connected to unused inputs/outputs.

The analogue circuits in the WM8904 require a bias current. The bias current is enabled by setting BIAS_ENA. Note that the bias current source requires VMID to be enabled also.

The Bias current is controlled using the ISEL register field. Note that the ISEL register should only be changed as part of the ‘Low Power Mode Enable’ sequence described in Table 48. In all other cases, it is recommended that the ISEL register is not changed from the default setting.

REGISTER ADDRESS	BIT	LABEL	DEFAULT	DESCRIPTION
R5 (05h) VMID Control (0)	6	VMID_BUF_ ENA	0	Enable VMID buffer to unused Inputs/Outputs 0 = Disabled 1 = Enabled
	2:1	VMID_RES [1:0]	00	VMID Divider Enable and Select 00 = VMID disabled (for OFF mode) 01 = 2 x 50k divider (for normal operation) 10 = 2 x 250k divider (for low power standby) 11 = 2 x 5k divider (for fast start-up)
	0	VMID_ENA	0	Enable VMID master bias current source 0 = Disabled 1 = Enabled
R4 (04h) Bias Control (0)	3:2	ISEL [1:0]	10	Master Bias Control 00 = Low power bias 01 = Reserved 10 = High performance bias (default) 11 = Reserved Note that the ISEL register should only be changed as part of the Low Power Mode Enable/Disable sequences.
	0	BIAS_ENA	0	Enables the Normal bias current generator (for all analogue functions) 0 = Disabled 1 = Enabled

Table 47 Reference Voltages and Master Bias Enable

LOW POWER PLAYBACK MODE

The analogue circuits of the WM8904 require a bias current. The default bias configuration is suitable for typical applications, and does not require any user adjustment.

For lowest power consumption in headphone or line output playback mode, the WM8904 bias settings must be configured using the register sequence described in Table 48.

Note that the low power playback bias settings are recommended for DAC / Playback modes only; they are not suitable for ADC / Record Path modes.

REGISTER ADDRESS	VALUE
04h	0011h
08h	0019h
CCh	0030h
5Bh	0002h
63h	2425h
64h	2B23h
A1h	0002h
65h	00C0h
A1h	0000h

Table 48 Low Power Playback Mode Enable Sequence

The low power mode disable sequence is described in Table 49.

Note that the low power playback bias settings are not suitable for ADC / Record Path modes; the low power configuration must be disabled for these modes.

REGISTER ADDRESS	VALUE
04h	0019h
08h	0001h
CCh	0000h
5Bh	0000h
63h	1F25h
64h	2B19h
A1h	0002h
65h	01C0h
A1h	0000h

Table 49 Low Power Playback Mode Disable Sequence

POP SUPPRESSION CONTROL

The WM8904 incorporates SilentSwitch technology which enables pops normally associated with Start-Up, Shutdown or signal path control to be suppressed. To achieve maximum benefit from these features, careful attention is required to the sequence and timing of these controls. Note that, under the recommended usage conditions of the WM8904, these features will be configured by running the default Start-Up and Shutdown sequences as described in the "Control Write Sequencer" section. In these cases, the user does not need to set these register fields directly.

The Pop Suppression controls relating to the Headphone / Line Output drivers are described in the "Output Signal Path" section.

DISABLED INPUT CONTROL

The analogue inputs to the WM8904 are biased to VMID in normal operation. In order to avoid audible pops caused by a disabled signal path dropping to AGND, the WM8904 can maintain these connections at VMID when the relevant input stage is disabled. This is achieved by connecting a buffered VMID reference to the input. The buffered VMID reference is enabled by setting VMID_BUF_ENA; when the buffered VMID reference is enabled, it is connected to any unused input pins.

REGISTER ADDRESS	BIT	LABEL	DEFAULT	DESCRIPTION
R5 (05h) VMID Control 0	6	VMID_BUF_ENA	0	VMID buffer to unused Inputs/Outputs 0 = Disabled 1 = Enabled
	0	VMID_ENA	0	VMID Buffer Enable 0 = Disabled 1 = Enabled

Table 50 Disabled Line Input Control

CHARGE PUMP

The WM8904 incorporates a dual-mode Charge Pump which generates the supply rails for the headphone and line output drivers, HPOUTL, HPOUTR, and LINEOUTL and LINEOUTR. The Charge Pump has a single supply input, CPVDD, and generates split rails CPVOUTP and CPVOUTN according to the selected mode of operation. The Charge Pump connections are illustrated in Figure 39 (see the "Electrical Characteristics" section for external component values). An input decoupling capacitor may also be required at CPVDD, depending upon the system configuration.

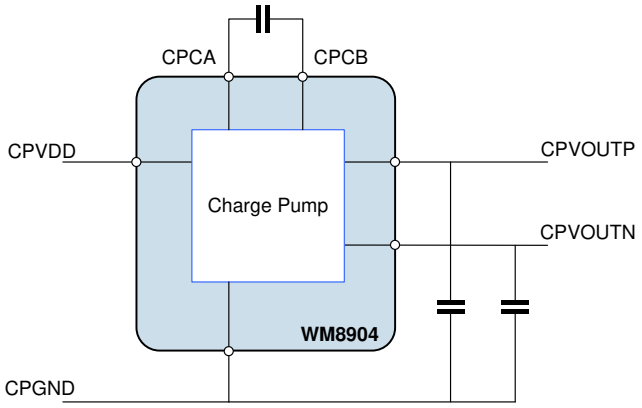

Figure 39 Charge Pump External Connections

The Charge Pump is enabled by setting the CP_ENA bit. When enabled, the charge pump adjusts the output voltages (CPVOUTP and CPVOUTN) as well as the switching frequency in order to optimise the power consumption according to the operating conditions. This can take two forms, which are selected using the CP_DYN_PWR register bit.

- Register control (CP_DYN_PWR = 0)
- Dynamic control (CP_DYN_PWR = 1)

Under Register control, the HPOUTL_VOL, HPOUTR_VOL, LINEOUTL_VOL and LINEOUTR_VOL register settings are used to control the charge pump mode of operation.

Under Dynamic control, the audio signal level in the DAC is used to control the charge pump mode of operation. This is the Wolfson 'Class W' mode, which allows the power consumption to be optimised in real time, but can only be used if the DAC is the only signal source. This mode should not be used if any of the bypass paths are used to feed analogue inputs into the output signal path.

Under the recommended usage conditions of the WM8904, the Charge Pump will be enabled by running the default headphone Start-Up sequence as described in the "Control Write Sequencer" section. (Similarly, it will be disabled by running the Shutdown sequence.) In these cases, the user does not need to write to the CP_ENA bit. The Charge Pump operating mode defaults to Register control; Dynamic control may be selected by setting the CP_DYN_PWR register bit, if appropriate.

When digital sidetone is used (see "Digital Mixing"), it is recommended that the Charge Pump operates in Register Control mode only (CP_DYN_PWR = 0). This is because the Dynamic Control mode (Class W) does not measure the sidetone signal level and hence the Charge Pump configuration cannot be optimised for all signal conditions when digital sidetone is enabled; this could lead to signal clipping.

Note that the charge pump clock is derived from internal clock SYSCLK; this may be derived from MCLK directly or else using the FLL output, as determined by the SYSCLK_SRC bit. Under normal circumstances an external clock signal must be present for the charge pump to function. However, the FLL has a free-running mode that does not require an external clock but will generate an internal clock suitable for running the charge pump. The clock division from SYSCLK is handled transparently by the WM8904 without user intervention, as long as SYSCLK and sample rates are set correctly. Refer to the "Clocking and Sample Rates" section for more detail on the FLL and clocking configuration.

The Charge Pump control fields are described in Table 51.

REGISTER ADDRESS	BIT	LABEL	DEFAULT	DESCRIPTION
R98 (62h) Charge Pump 0	0	CP_ENA	0	Enable charge-pump digits 0 = disable 1 = enable
R104 (68h) Class W (0)	0	CP_DYN_PWR	0	Enable dynamic charge pump power control 0 = Charge pump controlled by volume register settings (Class G) 1 = Charge pump controlled by real-time audio level (Class W) Class W is recommended for lowest power consumption

Table 51 Charge Pump Control

DC SERVO

The WM8904 provides four DC servo circuits, two on the headphone outputs HPOUTL and HPOUTR and two on the line outputs LINEOUTL and LINEOUTR, to remove DC offset from these ground-referenced outputs. When enabled, the DC servos ensure that the DC level of these outputs remains within 1mV of ground. Removal of the DC offset is important because any deviation from GND at the output pin will cause current to flow through the load under quiescent conditions, resulting in increased power consumption. Additionally, the presence of DC offsets can result in audible pops and clicks at power up and power down.

The recommended usage of the DC Servo is initialised by running the default Start-Up sequence as described in the "Control Write Sequencer" section. The default Start-Up sequence executes a series of DC offset corrections, after which the measured offset correction is maintained on the headphone output channels. If a different usage is required, e.g. if a periodic DC offset correction is required, then the default Start-Up sequence may be modified according to specific requirements. The relevant control fields are described in the following paragraphs and are defined in Table 52.

DC SERVO ENABLE AND START-UP

The DC Servo circuits are enabled on HPOUTL and HPOUTR by setting DCS_ENA_CHAN_0 and DCS_ENA_CHAN_1 respectively. Similarly, the DC Servo circuits are enabled on LINEOUTL and LINEOUTR by setting DCS_ENA_CHAN_2 and DCS_ENA_CHAN_3 respectively When the DC Servo is enabled, the DC offset correction can be commanded in a number of different ways, including single-shot and periodically recurring events.

Writing a logic 1 to DCS_TRIG_STARTUP_*n* initiates a series of DC offset measurements and applies the necessary correction to the associated output; ('n' = 3 for LINEOUTR channel, 2 for LINEOUTL channel, 1 for HPOUTR channel, 0 for HPOUTL channel). On completion, the output will be within 1mV of AGND. This is the DC Servo mode selected by the default Start-Up sequence. Completion of the DC offset correction triggered in this way is indicated by the DCS_STARTUP_COMPLETE field, as described in Table 52. Typically, this operation takes 86ms per channel.

Writing a logic 1 to DCS_TRIG_DAC_WR_*n* causes the DC offset correction to be set to the value contained in the DCS_DAC_WR_VAL_*n* fields in Registers R73 to R76. This mode is useful if the required offset correction has already been determined and stored; it is faster than the DCS_TRIG_STARTUP_*n* mode, but relies on the accuracy of the stored settings. Completion of the DC offset correction triggered in this way is indicated by the DCS_DAC_WR_COMPLETE field, as described in Table 52. Typically, this operation takes 2ms per channel.

When using either of the DC Servo options above, the status of the DC offset correction process is indicated by the DCS_CAL_COMPLETE field; this is the logical OR of the DCS_STARTUP_COMPLETE and DCS_DAC_WR_COMPLETE fields.

The DC Servo control fields associated with start-up operation are described in Table 52. It is important to note that, to minimise audible pops/clicks, the Start-Up and DAC Write modes of DC Servo operation should be commanded as part of a control sequence which includes muting and shorting of the headphone outputs; a suitable sequence is defined in the default Start-Up sequence.

REGISTER ADDRESS	BIT	LABEL	DEFAULT	DESCRIPTION
R68 (44h) DC Servo 1	7	DCS_TRIG_STARTUP_3	0	Writing 1 to this bit selects Start-Up DC Servo mode for LINEOUTR. In readback, a value of 1 indicates that the DC Servo Start-Up correction is in progress.
	6	DCS_TRIG_STARTUP_2	0	Writing 1 to this bit selects Start-Up DC Servo mode for LINEOUTL. In readback, a value of 1 indicates that the DC Servo Start-Up correction is in progress.
	5	DCS_TRIG_STARTUP_1	0	Writing 1 to this bit selects Start-Up DC Servo mode for HPOUTR. In readback, a value of 1 indicates that the DC Servo Start-Up correction is in progress.

REGISTER ADDRESS	BIT	LABEL	DEFAULT	DESCRIPTION
	4	DCS_TRIG_STARTUP_0	0	Writing 1 to this bit selects Start-Up DC Servo mode for HPOUTL. In readback, a value of 1 indicates that the DC Servo Start-Up correction is in progress.
	3	DCS_TRIG_DAC_WR_3	0	Writing 1 to this bit selects DAC Write DC Servo mode for LINEOUTR. In readback, a value of 1 indicates that the DC Servo DAC Write correction is in progress.
	2	DCS_TRIG_DAC_WR_2	0	Writing 1 to this bit selects DAC Write DC Servo mode for LINEOUTL. In readback, a value of 1 indicates that the DC Servo DAC Write correction is in progress.
	1	DCS_TRIG_DAC_WR_1	0	Writing 1 to this bit selects DAC Write DC Servo mode for HPOUTR. In readback, a value of 1 indicates that the DC Servo DAC Write correction is in progress.
	0	DCS_TRIG_DAC_WR_0	0	Writing 1 to this bit selects DAC Write DC Servo mode for HPOUTL. In readback, a value of 1 indicates that the DC Servo DAC Write correction is in progress.
R67 (43h) DC Servo 0	3	DCS_ENA_CHAN_3	0	DC Servo enable for LINEOUTR 0 = disabled 1 = enabled
	2	DCS_ENA_CHAN_2	0	DC Servo enable for LINEOUTL 0 = disabled 1 = enabled
	1	DCS_ENA_CHAN_1	0	DC Servo enable for HPOUTR 0 = disabled 1 = enabled
	0	DCS_ENA_CHAN_0	0	DC Servo enable for HPOUTL 0 = disabled 1 = enabled
R73 (49h) DC Servo 6	7:0	DCS_DAC_WR_VAL_3 [7:0]	0000 0000	DC Offset value for LINEOUTR in DAC Write DC Servo mode in two's complement format. In readback, the current DC offset value is returned in two's complement format. Two's complement format: LSB is 0.25mV. Range is +/-32mV

REGISTER ADDRESS	BIT	LABEL	DEFAULT	DESCRIPTION
R74 (4Ah) DC Servo 7	7:0	DCS_DAC_WR_VAL_2 [7:0]	0000 0000	DC Offset value for LINEOUTL in DAC Write DC Servo mode in two's complement format. In readback, the current DC offset value is returned in two's complement format. Two's complement format: LSB is 0.25mV. Range is +/-32mV
R75 (4Bh) DC Servo 8	7:0	DCS_DAC_WR_VAL1 [7:0]	0000 0000	DC Offset value for HPOUTR in DAC Write DC Servo mode in two's complement format. In readback, the current DC offset value is returned in two's complement format. Two's complement format: LSB is 0.25mV. Range is +/-32mV
R76 (4Ch) DC Servo 9	7:0	DCS_DAC_WR_VAL0 [7:0]	0000 0000	DC Offset value for HPOUTL in DAC Write DC Servo mode in two's complement format. In readback, the current DC offset value is returned in two's complement format. Two's complement format: LSB is 0.25mV. Range is +/-32mV
R77 (4Dh) DC Servo Readback 0	11:8	DCS_CAL_COMPLETE [3:0]	0000	DC Servo Complete status [3] - LINEOUTR [2] - LINEOUTL [1] - HPOUTR [0] - HPOUTL 0 = DAC Write or Start-Up DC Servo mode not completed. 1 = DAC Write or Start-Up DC Servo mode complete.
	7:4	DCS_DAC_WR_COMPLETE [3:0]	0000	DC Servo DAC Write status [3] - LINEOUTR [2] - LINEOUTL [1] - HPOUTR [0] - HPOUTL 0 = DAC Write DC Servo mode not completed. 1 = DAC Write DC Servo mode complete.

REGISTER ADDRESS	BIT	LABEL	DEFAULT	DESCRIPTION
	3:0	DCS_STARTUP_ COMPLETE [3:0]	0000	DC Servo Start-Up status [3] - LINEOUTR [2] - LINEOUTL [1] - HPOUTR [0] - HPOUTL 0 = Start-Up DC Servo mode not completed.. 1 = Start-Up DC Servo mode complete.

Table 52 DC Servo Enable and Start-Up Modes

DC SERVO ACTIVE MODES

The DC Servo modes described above are suitable for initialising the DC offset correction circuit on the Line and Headphone outputs as part of a controlled start-up sequence which is executed before the signal path is fully enabled. Additional modes are available for use whilst the signal path is active; these modes may be of benefit following a large change in signal gain, which can lead to a change in DC offset level. Periodic updates may also be desirable to remove slow drifts in DC offset caused by changes in parameters such as device temperature.

The DC Servo circuit is enabled on HPOUTR and HPOUTL by setting DCS_ENA_CHAN_1 and DCS_ENA_CHAN_0 respectively, as described earlier in Table 52. Similarly, the DC Servo circuit is enabled on LINEOUTR and LINEOUTL by setting DCS_ENA_CHAN_3 and DCS_ENA_CHAN_2 respectively.

Writing a logic 1 to DCS_TRIG_SINGLE_*n* initiates a single DC offset measurement and adjustment to the associated output; ('n' = 3 for LINEOUTR channel, 2 for LINEOUTL channel, 1 for HPOUTR channel, 0 for HPOUTL channel). This will adjust the DC offset correction on the selected channel by no more than 1LSB (0.25mV).

Setting DCS_TIMER_PERIOD_01 or DCS_TIMER_PERIOD_23 to a non-zero value will cause a single DC offset measurement and adjustment to be scheduled on a periodic basis. Periodic rates ranging from every 0.52s to in excess of 2 hours can be selected.

Writing a logic 1 to DCS_TRIG_SERIES_*n* initiates a series of DC offset measurements and applies the necessary correction to the associated output. The number of DC Servo operations performed is determined by DCS_SERIES_NO_01 or DCS_SERIES_NO_23. A maximum of 128 operations may be selected, though a much lower value will be sufficient in most applications.

The DC Servo control fields associated with active modes (suitable for use on a signal path that is in active use) are described in Table 53.

REGISTER ADDRESS	BIT	LABEL	DEFAULT	DESCRIPTION
R68 (44h) DC Servo 1	15	DCS_TRIG_SING LE_3	0	Writing 1 to this bit selects a single DC offset correction for LINEOUTR. In readback, a value of 1 indicates that the DC Servo single correction is in progress.
	14	DCS_TRIG_SING LE_2	0	Writing 1 to this bit selects a single DC offset correction for LINEOUTL. In readback, a value of 1 indicates that the DC Servo single correction is in progress.
	13	DCS_TRIG_SING LE_1	0	Writing 1 to this bit selects a single DC offset correction for HPOUTR. In readback, a value of 1 indicates that the DC Servo single correction is in progress.

REGISTER ADDRESS	BIT	LABEL	DEFAULT	DESCRIPTION
	12	DCS_TRIG_SINGLE_0	0	Writing 1 to this bit selects a single DC offset correction for HPOUTL. In readback, a value of 1 indicates that the DC Servo single correction is in progress.
	11	DCS_TRIG_SERIES_3	0	Writing 1 to this bit selects a series of DC offset corrections for LINEOUTR. In readback, a value of 1 indicates that the DC Servo DAC Write correction is in progress.
	10	DCS_TRIG_SERIES_2	0	Writing 1 to this bit selects a series of DC offset corrections for LINEOUTL. In readback, a value of 1 indicates that the DC Servo DAC Write correction is in progress.
	9	DCS_TRIG_SERIES_1	0	Writing 1 to this bit selects a series of DC offset corrections for HPOUTR. In readback, a value of 1 indicates that the DC Servo DAC Write correction is in progress.
	8	DCS_TRIG_SERIES_0	0	Writing 1 to this bit selects a series of DC offset corrections for HPOUTL. In readback, a value of 1 indicates that the DC Servo DAC Write correction is in progress.
R71 (47h) DC Servo 4	6:0	DCS_SERIES_NO_23 [6:0]	010_1010	Number of DC Servo updates to perform in a series event for LINEOUTL/LINEOUTR. 0 = 1 updates 1 = 2 updates ... 127 = 128 updates
R72 (48h) DC Servo 5	6:0	DCS_SERIES_NO_01 [6:0]	010 1010	Number of DC Servo updates to perform in a series event for HPOUTL/HPOUTR. 0 = 1 updates 1 = 2 updates ... 127 = 128 updates
R69 (45h) DC Servo 2	11:8	DCS_TIMER_PERIOD_23 [3:0]	1010	Time between periodic updates for LINEOUTL/LINEOUTR. Time is calculated as 0.256s x (2^PERIOD) 0000 = Off 0001 = 0.52s 1010 = 266s (4min 26s) 1111 = 8519s (2hr 22s)
	3:0	DCS_TIMER_PERIOD_01 [3:0]	1010	Time between periodic updates for HPOUTL/HPOUTR. Time is calculated as 0.256s x (2^PERIOD) 0000 = Off 0001 = 0.52s 1010 = 266s (4min 26s) 1111 = 8519s (2hr 22s)

Table 53 DC Servo Active Modes

DC SERVO READBACK

The current DC offset value for each Line and Headphone output channel can be read in two's complement format from the DCS_DAC_WR_VAL_n [7:0] bit fields in Registers R73, R74, R75 and R76. Note that these values may form the basis of settings that are subsequently used by the DC Servo in DAC Write mode.

DIGITAL AUDIO INTERFACE

The digital audio interface is used for inputting DAC data to the WM8904 and outputting ADC data from it. The digital audio interface uses four pins:

- ADCDAT: ADC data output
- DACDAT: DAC data input
- LRCLK: Left/Right data alignment clock
- BCLK: Bit clock, for synchronisation

The clock signals BCLK and LRCLK can be outputs when the WM8904 operates as a master, or inputs when it is a slave (see "Master and Slave Mode Operation", below).

Four different audio data formats are supported:

- Left justified
- Right justified
- I2S
- DSP mode

All four of these modes are MSB first. They are described in "Audio Data Formats (Normal Mode)", below. Refer to the "Signal Timing Requirements" section for timing information.

Time Division Multiplexing (TDM) is available in all four data format modes. The WM8904 can be programmed to send and receive data in one of two time slots.

PCM operation is supported using the DSP mode.

MASTER AND SLAVE MODE OPERATION

The WM8904 digital audio interface can operate in master or slave mode, as shown in Figure 40 and Figure 41.

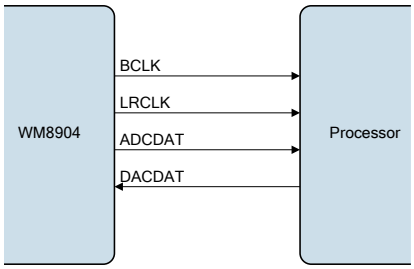

Figure 40 Master Mode

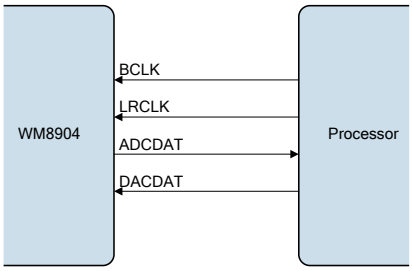

Figure 41 Slave Mode

In master mode, BCLK is derived from SYSCLK via a programmable division set by BCLK_DIV.

In master mode, LRCLK is derived from BCLK via a programmable division set by LRCLK_RATE. The BCLK input to this divider may be internal or external, allowing mixed master and slave modes.

The direction of these signals and the clock frequencies are controlled as described in the “Digital Audio Interface Control” section.

BCLK and LRCLK can be enabled as outputs in Slave mode, allowing mixed Master/Slave operation - see “Digital Audio Interface Control”.

OPERATION WITH TDM

Time division multiplexing (TDM) allows multiple devices to transfer data simultaneously on the same bus. The WM8904 ADCs and DACs support TDM in master and slave modes for all data formats and word lengths. TDM is enabled and configured using register bits defined in the “Digital Audio Interface Control” section.

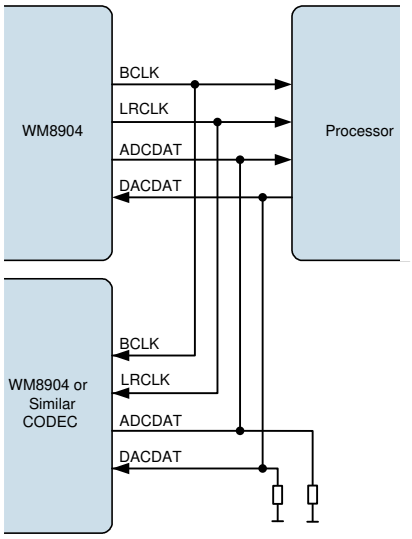

Figure 42 TDM with WM8904 as Master

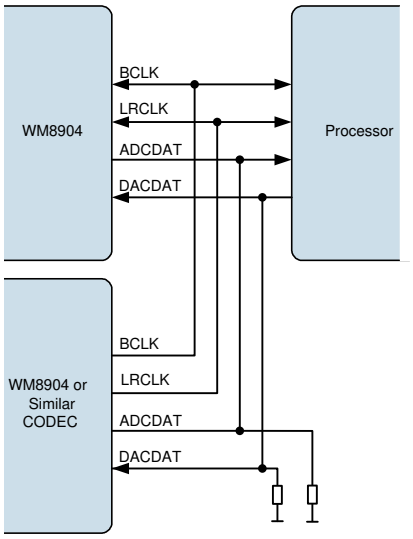

Figure 43 TDM with Other CODEC as Master

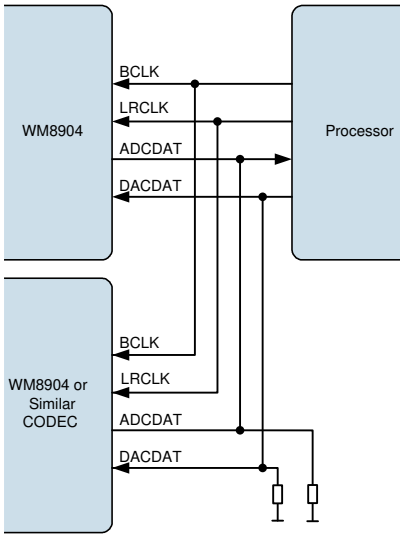

Figure 44 TDM with Processor as Master

Note: The WM8904 is a 24-bit device. If the user operates the WM8904 in 32-bit mode then the 8 LSBs will be ignored on the receiving side and not driven on the transmitting side. It is therefore

recommended to add a pull-down resistor if necessary to the DACDAT line and the ADCDAT line in TDM mode.

BCLK FREQUENCY

The BCLK frequency is controlled relative to SYSCLK by the BCLK_DIV divider. Internal clock divide and phase control mechanisms ensure that the BCLK and LRCLK edges will occur in a predictable and repeatable position relative to each other and relative to the data for a given combination of DAC/ADC sample rate and BCLK_DIV settings.

BCLK_DIV is defined in the "Digital Audio Interface Control" section. See also the "Clocking and Sample Rates" section for more information.

AUDIO DATA FORMATS (NORMAL MODE)

In Right Justified mode, the LSB is available on the last rising edge of BCLK before a LRCLK transition. All other bits are transmitted before (MSB first). Depending on word length, BCLK frequency and sample rate, there may be unused BCLK cycles after each LRCLK transition.

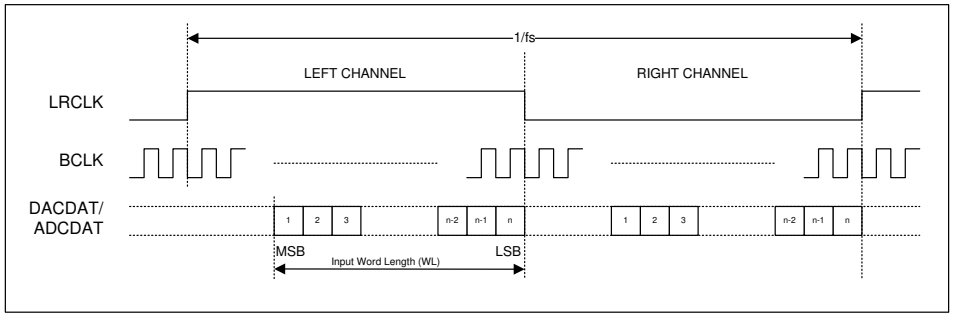

Figure 45 Right Justified Audio Interface (assuming n-bit word length)

In Left Justified mode, the MSB is available on the first rising edge of BCLK following a LRCLK transition. The other bits up to the LSB are then transmitted in order. Depending on word length, BCLK frequency and sample rate, there may be unused BCLK cycles before each LRCLK transition.

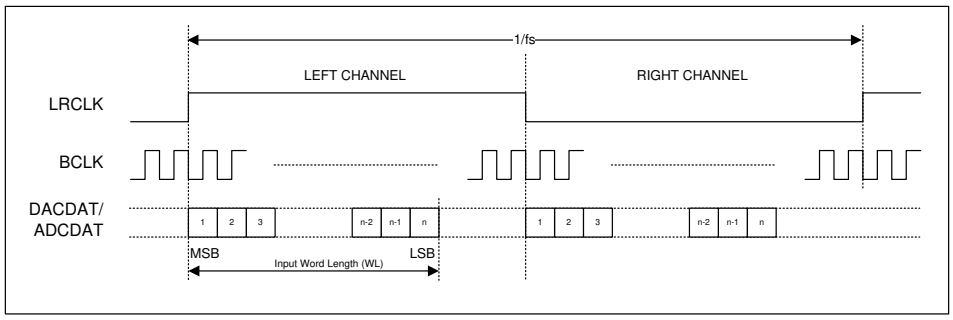

Figure 46 Left Justified Audio Interface (assuming n-bit word length)

In I^2S mode, the MSB is available on the second rising edge of BCLK following a LRCLK transition. The other bits up to the LSB are then transmitted in order. Depending on word length, BCLK frequency and sample rate, there may be unused BCLK cycles between the LSB of one sample and the MSB of the next.

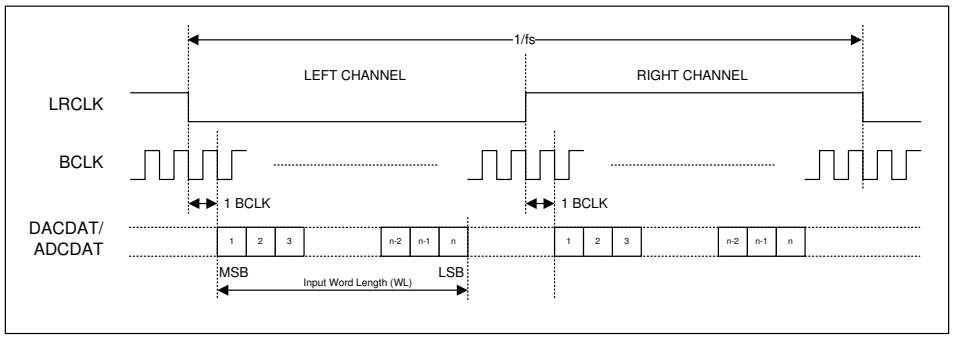

Figure 47 I2S Justified Audio Interface (assuming n-bit word length)

In DSP mode, the left channel MSB is available on either the 1st (mode B) or 2nd (mode A) rising edge of BCLK (selectable by AIF_LRCLK_INV) following a rising edge of LRCLK. Right channel data immediately follows left channel data. Depending on word length, BCLK frequency and sample rate, there may be unused BCLK cycles between the LSB of the right channel data and the next sample.

In device master mode, the LRCLK output will resemble the frame pulse shown in Figure 48 and Figure 49. In device slave mode, Figure 50 and Figure 51, it is possible to use any length of frame pulse less than 1/fs, providing the falling edge of the frame pulse occurs greater than one BCLK period before the rising edge of the next frame pulse.

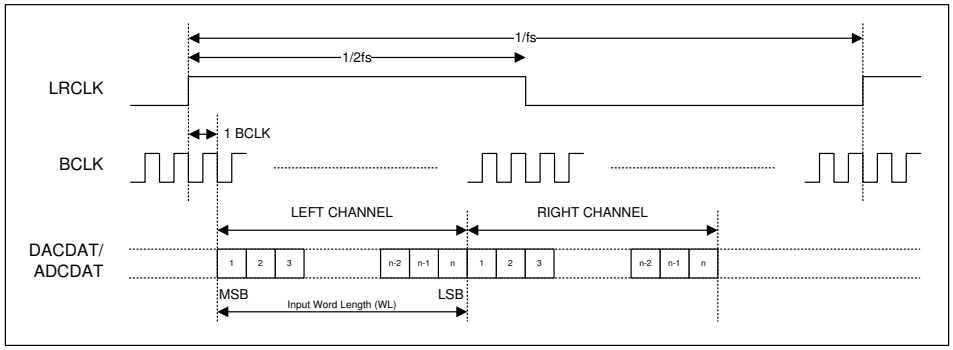

Figure 48 DSP Mode Audio Interface (mode A, AIF_LRCLK_INV=0, Master)

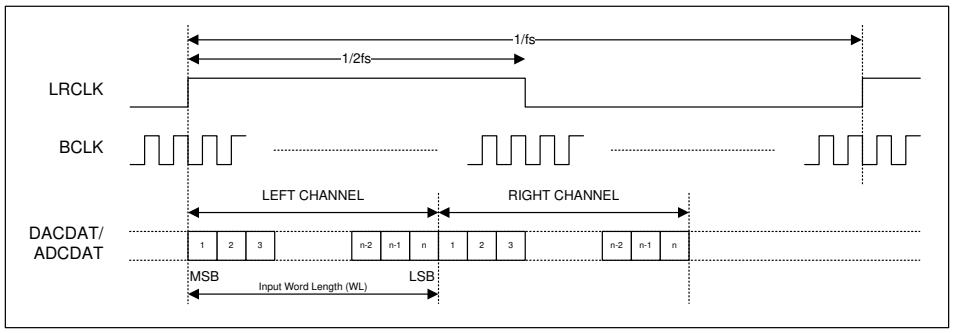

Figure 49 DSP Mode Audio Interface (mode B, AIF_LRCLK_INV=1, Master)

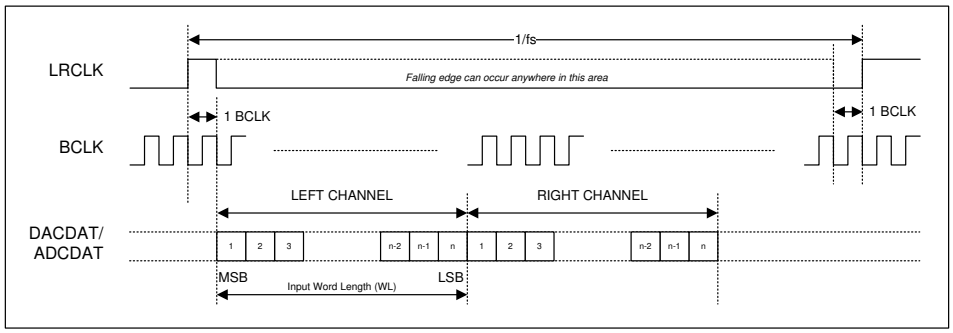

Figure 50 DSP Mode Audio Interface (mode A, AIF_LRCLK_INV=0, Slave)

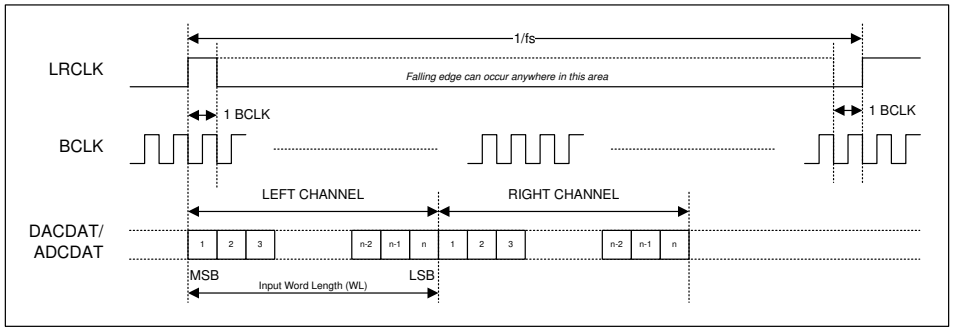

Figure 51 DSP Mode Audio Interface (mode B, AIF_LRCLK_INV=1, Slave)

PCM operation is supported in DSP interface mode. WM8904 ADC data that is output on the Left Channel will be read as mono PCM data by the receiving equipment. Mono PCM data received by the WM8904 will be treated as Left Channel data. This data may be routed to the Left/Right DACs as described in the "Digital Mixing" section.

AUDIO DATA FORMATS (TDM MODE)

TDM is supported in master and slave mode and is enabled by register bits AIFADC_TDM and AIFDAC_TDM. All audio interface data formats support time division multiplexing (TDM) for ADC and DAC data.

Two time slots are available (Slot 0 and Slot 1), selected by register bits AIFADC_TDM_CHAN and AIFDAC_TDM_CHAN which control time slots for the ADC data and the DAC data.

When TDM is enabled, the ADCDAT pin will be tri-stated immediately before and immediately after data transmission, to allow another audio device to drive this signal line for the remainder of the sample period. It is important that two audio devices do not attempt to drive the data pin simultaneously, as this could result in a short circuit. See "Audio Interface Timing" for details of the ADCDAT output relative to BCLK signal. Note that it is possible to ensure a gap exists between transmissions by setting the transmitted word length to a value higher than the actual length of the data. For example, if 32-bit word length is selected where only 24-bit data is available, then the WM8904 interface will tri-state after transmission of the 24-bit data; this creates an 8-bit gap after the WM8904's TDM transmission slot.

When TDM is enabled, BCLK frequency must be high enough to allow data from both time slots to be transferred. The relative timing of Slot 0 and Slot 1 depends upon the selected data format as shown in Figure 52 to Figure 56.

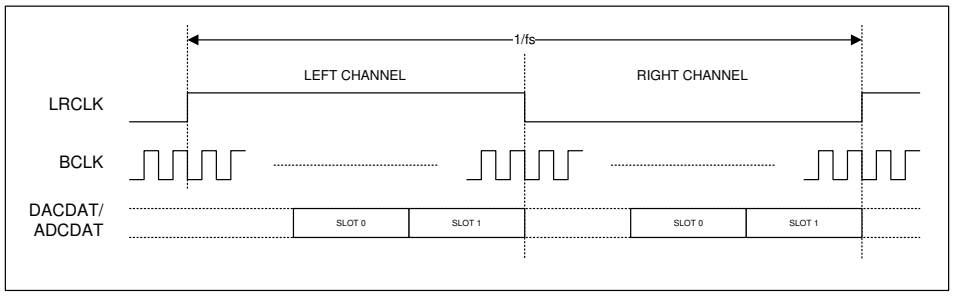

Figure 52 TDM in Right-Justified Mode

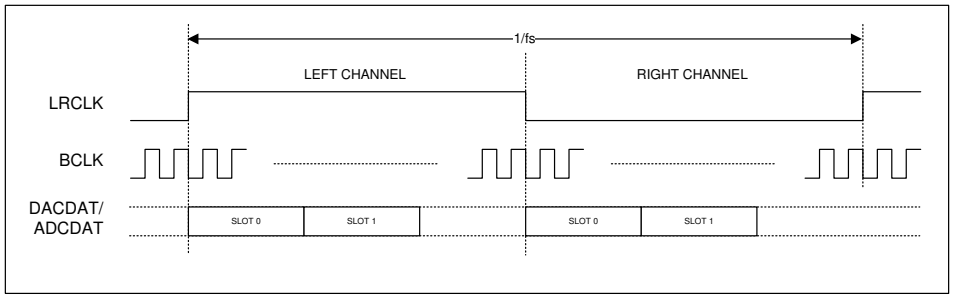

Figure 53 TDM in Left-Justified Mode

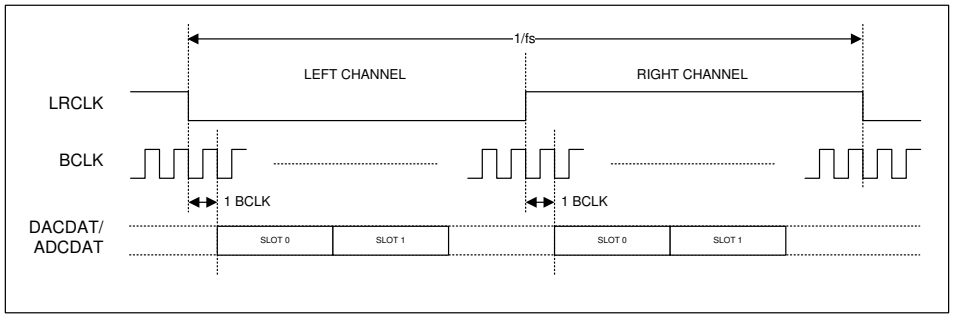

Figure 54 TDM in I²S Mode

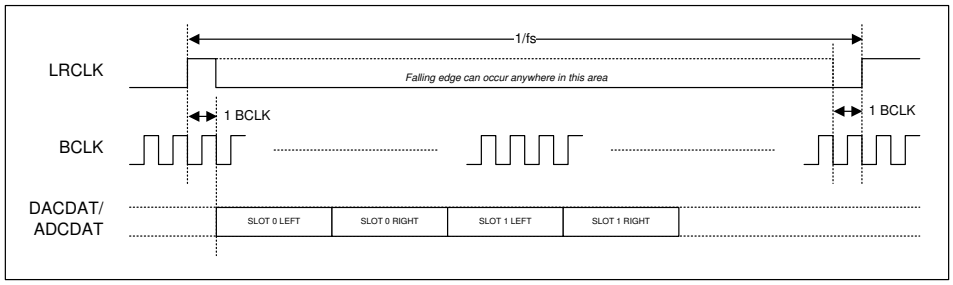

Figure 55 TDM in DSP Mode A

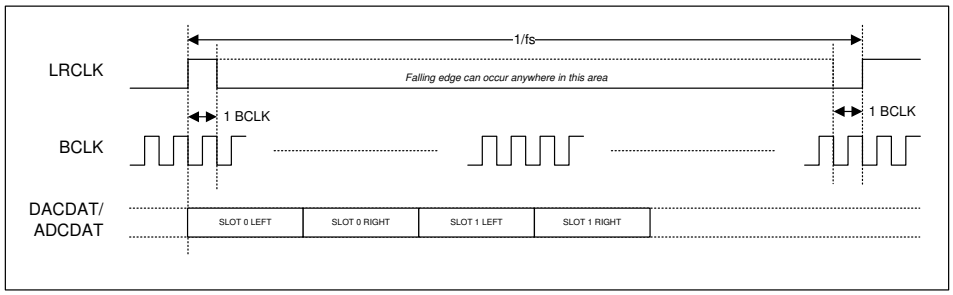

Figure 56 TDM in DSP Mode B

DIGITAL AUDIO INTERFACE CONTROL

The register bits controlling audio data format, word length, left/right channel data source and TDM are summarised in Table 54.

REGISTER ADDRESS	BIT	LABEL	DEFAULT	DESCRIPTION
R24 (18h) Audio Interface 0	7	AIFADCL_SRC	0	Left Digital Audio channel source 0 = Left ADC data is output on left channel 1 = Right ADC data is output on left channel
	6	AIFADCR_SRC	1	Right Digital Audio channel source 0 = Left ADC data is output on right channel 1 = Right ADC data is output on right channel
	5	AIFDACL_SRC	0	Left DAC Data Source Select 0 = Left DAC outputs left channel data 1 = Left DAC outputs right channel data
	4	AIFDACR_SRC	1	Right DAC Data Source Select 0 = Right DAC outputs left channel data 1 = Right DAC outputs right channel data
R25 (19h) Audio Interface 1	13	AIFDAC_TDM	0	DAC TDM Enable 0 = Normal DACDAT operation 1 = TDM enabled on DACDAT
	12	AIFDAC_TDM_CHAN	0	DACDAT TDM Channel Select 0 = DACDAT data input on slot 0 1 = DACDAT data input on slot 1
	11	AIFADC_TDM	0	ADC TDM Enable 0 = Normal ADCDAT operation 1 = TDM enabled on ADCDAT
	10	AIFADC_TDM_CHAN	0	ADCDAT TDM Channel Select 0 = ADCDAT outputs data on slot 0 1 = ADCDAT output data on slot 1
	7	AIF_BCLK_INV	0	BCLK Invert 0 = BCLK not inverted 1 = BCLK inverted
	4	AIF_LRCLK_INV	0	LRC Polarity / DSP Mode A-B select. Right, left and I2S modes – LRC polarity 0 = Not Inverted 1 = Inverted DSP Mode – Mode A-B select 0 = MSB is available on 2nd BCLK rising edge after LRC rising edge (mode A) 1 = MSB is available on 1st BCLK rising edge after LRC rising edge (mode B)

REGISTER ADDRESS	BIT	LABEL	DEFAULT	DESCRIPTION
	3:2	AIF_WL [1:0]	10	Digital Audio Interface Word Length 00 = 16 bits 01 = 20 bits 10 = 24 bits 11 = 32 bits
	1:0	AIF_FMT [1:0]	10	Digital Audio Interface Format 00 = Right Justified 01 = Left Justified 10 = I2S 11 = DSP

Table 54 Digital Audio Interface Data Control

Note that the WM8904 is a 24-bit device. In 32-bit mode (AIF_WL=11), the 8 LSBs are ignored on the receiving side and not driven on the transmitting side.

AUDIO INTERFACE OUTPUT TRI-STATE

Register bit AIF_TRIS can be used to tri-state the audio interface pins as described in Table 55. All digital audio interface pins will be tri-stated by this function, regardless of the state of other registers which control these pin configurations.

REGISTER ADDRESS	BIT	LABEL	DEFAULT	DESCRIPTION
R25 (19h) Audio Interface 1	8	AIF_TRIS	0	Audio Interface Tristate 0 = Audio interface pins operate normally 1 = Tristate all audio interface pins

Table 55 Digital Audio Interface Tri-State Control

BCLK AND LRCLK CONTROL

The audio interface can be programmed to operate in master mode or slave mode using the BCLK_DIR and LRCLK_DIR register bits. In master mode, the BCLK and LRCLK signals are generated by the WM8904 when any of the ADCs or DACs is enabled. In slave mode, the BCLK and LRCLK clock outputs are disabled by default to allow another digital audio interface to drive these pins.

It is also possible to force the BCLK or LRCLK signals to be output using BCLK_DIR and LRCLK_DIR, allowing mixed master and slave modes. The BCLK_DIR and LRCLK_DIR fields are defined in Table 56.

REGISTER ADDRESS	BIT	LABEL	DEFAULT	DESCRIPTION
R25 (19h) Audio Interface 1	6	BCLK_DIR	0	Audio Interface BCLK Direction 0 = BCLK is input 1 = BCLK is output

REGISTER ADDRESS	BIT	LABEL	DEFAULT	DESCRIPTION
R26 (1Ah) Audio Interface 2	4:0	BCLK_DIV [4:0]	0_0100	BCLK Frequency (Master Mode) 00000 = SYSCLK 00001 = SYSCLK / 1.5 00010 = SYSCLK / 2 00011 = SYSCLK / 3 00100 = SYSCLK / 4 (default) 00101 = SYSCLK / 5 00110 = SYSCLK / 5.5 00111 = SYSCLK / 6 01000 = SYSCLK / 8 01001 = SYSCLK / 10 01010 = SYSCLK / 11 01011 = SYSCLK / 12 01100 = SYSCLK / 16 01101 = SYSCLK / 20 01110 = SYSCLK / 22 01111 = SYSCLK / 24 10000 = SYSCLK / 25 10001 = SYSCLK / 30 10010 = SYSCLK / 32 10011 = SYSCLK / 44 10100 = SYSCLK / 48
R27 (1Bh) Audio Interface 3	11	LRCLK_DIR	0	Audio Interface LRC Direction 0 = LRC is input 1 = LRC is output
	10:0	LRCLK_RATE [10:0]	000_0100 _0000	LRC Rate (Master Mode) LRC clock output = BCLK / LRCLK_RATE Integer (LSB = 1) Valid range: 8 to 2047

Table 56 Digital Audio Interface Clock Control

COMPANDING

The WM8904 supports A-law and μ-law companding on both transmit (ADC) and receive (DAC) sides as shown in Table 57.

REGISTER ADDRESS	BIT	LABEL	DEFAULT	DESCRIPTION
R24 (18h) Audio Interface 0	3	ADC_COMP	0	ADC Companding Enable 0 = disabled 1 = enabled
	2	ADC_COMPMODE	0	ADC Companding Type 0 = μ-law 1 = A-law
	1	DAC_COMP	0	DAC Companding Enable 0 = disabled 1 = enabled
	0	DAC_COMPMODE	0	DAC Companding Type 0 = μ-law 1 = A-law

Table 57 Companding Control

Companding involves using a piecewise linear approximation of the following equations (as set out by ITU-T G.711 standard) for data compression:

μ-law (where μ=255 for the U.S. and Japan):

$$F(x) = \ln(1 + \mu|x|) / \ln(1 + \mu) \qquad -1 \le x \le 1$$

A-law (where A=87.6 for Europe):

$$F(x) = A|x| / (1 + \ln A) \qquad x \le 1/A$$

$$F(x) = (1 + \ln A|x|) / (1 + \ln A) \qquad 1/A \le x \le 1$$

The companded data is also inverted as recommended by the G.711 standard (all 8 bits are inverted for μ-law, all even data bits are inverted for A-law). The data will be transmitted as the first 8 MSBs of data.

Companding converts 13 bits (μ-law) or 12 bits (A-law) to 8 bits using non-linear quantization. This provides greater precision for low amplitude signals than for high amplitude signals, resulting in a greater usable dynamic range than 8 bit linear quantization. The companded signal is an 8-bit word comprising sign (1 bit), exponent (3 bits) and mantissa (4 bits).

8-bit mode is selected whenever DAC_COMP=1 or ADC_COMP=1. The use of 8-bit data allows samples to be passed using as few as 8 BCLK cycles per LRCLK frame. When using DSP mode B, 8-bit data words may be transferred consecutively every 8 BCLK cycles.

8-bit mode (without Companding) may be enabled by setting DAC_COMPMODE=1 or ADC_COMPMODE=1, when DAC_COMP=0 and ADC_COMP=0.

BIT7	BIT [6:4]	BIT [3:0]
SIGN	EXPONENT	MANTISSA

Table 58 8-bit Companded Word Composition

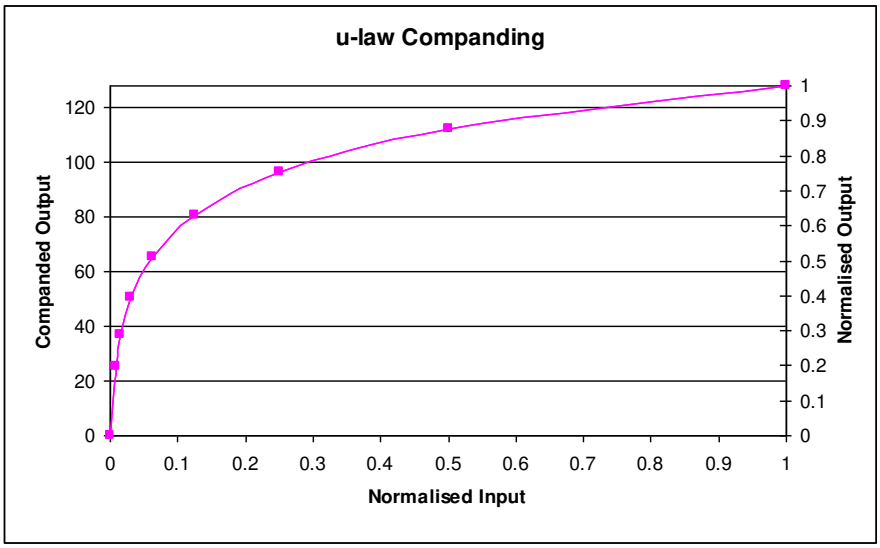

Figure 57 μ-Law Companding

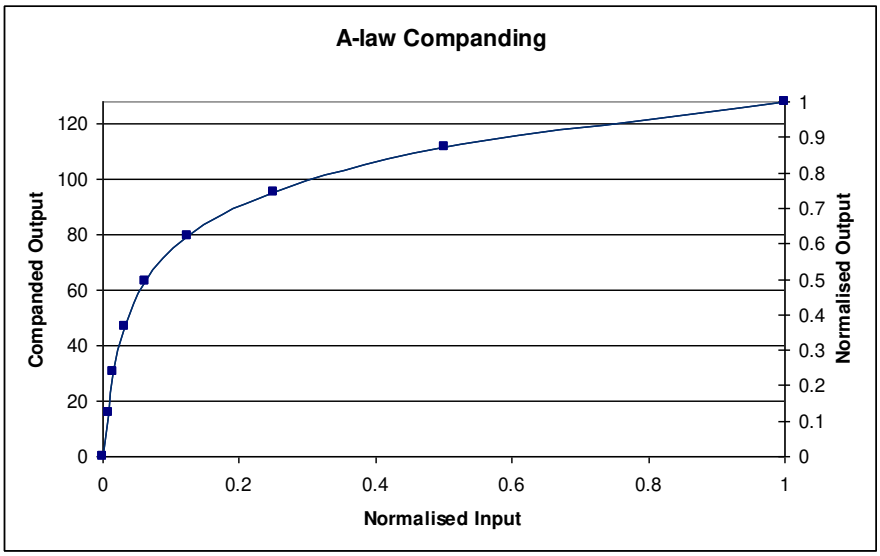

Figure 58 A-Law Companding

LOOPBACK

Setting the LOOPBACK register bit enables digital loopback. When this bit is set, the ADC digital data output is routed to the DAC digital data input path. The digital audio interface input (DACDAT) is not used when LOOPBACK is enabled.

REGISTER ADDRESS	BIT	LABEL	DEFAULT	DESCRIPTION
R24 (18h) Audio Interface 0	8	LOOPBACK	0	Digital Loopback Function 0 = No loopback 1 = Loopback enabled (ADC data output is directly input to DAC data input).

Table 59 Loopback Control

Note: When the digital sidetone is enabled, ADC data will also be added to DAC digital data input path within the Digital Mixing circuit. This applies regardless of whether LOOPBACK is enabled.

DIGITAL PULL-UP AND PULL-DOWN

The WM8904 provides integrated pull-up and pull-down resistors on each of the MCLK, DACDAT, LRCLK and BCLK pins. This provides a flexible capability for interfacing with other devices. Each of the pull-up and pull-down resistors can be configured independently using the register bits described in Table 60.

REGISTER ADDRESS	BIT	LABEL	DEFAULT	DESCRIPTION
R126 (7Eh) Digital Pulls	7	MCLK_PU	0	MCLK pull-up resistor enable 0 = pull-up disabled 1 = pull-up enabled
	6	MCLK_PD	0	MCLK pull-down resistor enable 0 = pull-down disabled 1 = pull-down enabled
	5	DACDAT_PU	0	DACDAT pull-up resistor enable 0 = pull-up disabled 1 = pull-up enabled

REGISTER ADDRESS	BIT	LABEL	DEFAULT	DESCRIPTION
	4	DACDAT_PD	0	DACDAT pull-down resistor enable 0 = pull-down disabled 1 = pull-down enabled
	3	LRCLK_PU	0	LRCLK pull-up resistor enable 0 = pull-up disabled 1 = pull-up enabled
	2	LRCLK_PD	0	LRCLK pull-down resistor enable 0 = pull-down disabled 1 = pull-down enabled
	1	BCLK_PU	0	BCLK pull-up resistor enable 0 = pull-up disabled 1 = pull-up enabled
	0	BCLK_PD	0	BCLK pull-down resistor enable 0 = pull-down disabled 1 = pull-down enabled

Table 60 Digital Audio Interface Pull-Up and Pull-Down Control

CLOCKING AND SAMPLE RATES

The internal clocks for the WM8904 are all derived from a common internal clock source, SYSCLK. This clock is the reference for the ADCs, DACs, DSP core functions, digital audio interface, DC servo control and other internal functions.

SYSCLK can either be derived directly from MCLK, or may be generated from a Frequency Locked Loop (FLL) using MCLK, BCLK or LRCLK as a reference. Many commonly-used audio sample rates can be derived directly from typical MCLK frequencies; the FLL provides additional flexibility for a wide range of MCLK frequencies. To avoid audible glitches, all clock configurations must be set up before enabling playback. The FLL can be used to generate a free-running clock in the absence of an external reference source; see “Frequency Locked Loop (FLL)” for further details.

The WM8904 supports automatic clocking configuration. The programmable dividers associated with the ADCs, DACs, DSP core functions and DC servo are configured automatically, with values determined from the CLK_SYS_RATE and SAMPLE_RATE fields. The user must also configure the OPCLK (if required), the TOCLK (if required) and the Digital Audio Interface.

Oversample rates of 64fs or 128fs are supported (based on a 48kHz sample rate).

A 256kHz clock, supporting a number of internal functions, is derived from SYSCLK.

The DC servo control is clocked from SYSCLK.

A GPIO Clock, OPCLK, can be derived from SYSCLK and output on a GPIO pin to provide clocking to other devices. This clock is enabled by OPCLK_ENA and controlled by OPCLK_DIV.

A slow clock, TOCLK, is used to de-bounce the button/accessory detect inputs, and to set the timeout period for volume updates when zero-cross detect is used. This clock is enabled by TOCLK_ENA and controlled by TOCLK_RATE, TOCLK_RATE_X4 and TOCLK_RATE_DIV16.

In master mode, BCLK is derived from SYSCLK via a programmable divider set by BCLK_DIV. In master mode, the LRCLK is derived from BCLK via a programmable divider LRCLK_RATE. The LRCLK can be derived from an internal or external BCLK source, allowing mixed master/slave operation.

The control registers associated with Clocking and Sample Rates are shown in Table 61 to Table 65.

The overall clocking scheme for the WM8904 is illustrated in Figure 59.

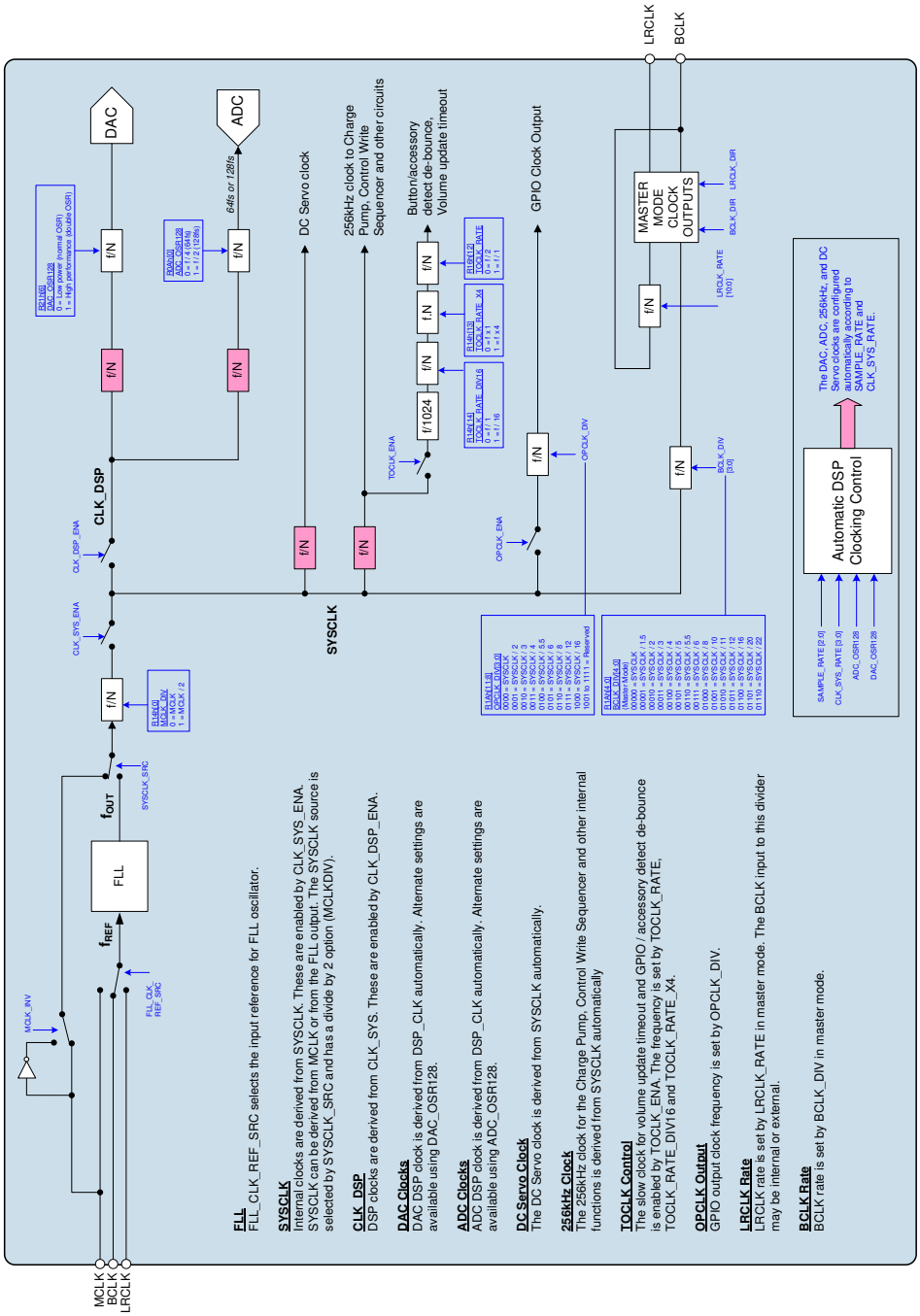

Figure 59 Clocking Overview

SYSCLK CONTROL

The SYSCLK_SRC bit is used to select the source for SYSCLK. The source may be either the MCLK input or the FLL output. The MCLK input can be inverted or non-inverted, as selected by the MCLK_INV bit. The selected source may also be adjusted by the MCLK_DIV divider to generate SYSCLK. These register fields are described in Table 61. See "Frequency Locked Loop (FLL)" for more details of the Frequency Locked Loop clock generator.

The SYSCLK signal is enabled by register bit CLK_SYS_ENA. This bit should be set to 0 when reconfiguring clock sources. It is not recommended to change SYSCLK_SRC while the CLK_SYS_ENA bit is set.

The following operating frequency limits must be observed when configuring SYSCLK. Failure to observe these limits will result in degraded noise performance and/or incorrect ADC/DAC functionality.

- SYSCLK ≥ 3MHz
- If DAC_OSR128 = 1 then SYSCLK ≥ 6MHz
- If DAC_MONO = 1, then SYSCLK ≥ 64 x fs
- If DAC_MONO = 0, then SYSCLK ≥ 128 x fs
- If ADCL_ENA = 1 or ADCR_ENA = 1 then SYSCLK ≥ 256 x fs

Note that DAC Mono mode (DAC_MONO = 1) is only valid when one or other DAC is disabled. If both DACs are enabled, then the minimum SYSCLK for clocking the DACs is 128 x fs.

The SYSCLK control register fields are defined in Table 61.

REGISTER ADDRESS	BIT	LABEL	DEFAULT	DESCRIPTION
R22 (16h) Clock Rates 2	15	MCLK_INV	0	MCLK Invert 0 = MCLK not inverted 1 = MCLK inverted
	14	SYSCLK_SRC	0	SYSCLK Source Select 0 = MCLK 1 = FLL output
	2	CLK_SYS_ENA	0	System Clock enable 0 = Disabled 1 = Enabled
R20 (14h) Clock Rates 0	0	MCLK_DIV	0	Enables divide by 2 on MCLK 0 = SYSCLK = MCLK 1 = SYSCLK = MCLK / 2

Table 61 MCLK and SYSCLK Control

CONTROL INTERFACE CLOCKING

Register map access is possible with or without a Master Clock (MCLK). However, if CLK_SYS_ENA has been set to 1, then a Master Clock must be present for control register Read/Write operations. If CLK_SYS_ENA = 1 and MCLK is not present, then register access will be unsuccessful. (Note that read/write access to register R22, containing CLK_SYS_ENA, is always possible.)

If it cannot be assured that MCLK is present when accessing the register map, then it is required to set CLK_SYS_ENA = 0 to ensure correct operation.

It is possible to use the WM8904 analogue bypass paths to the differential line outputs (LON/LOP and RON/ROP) without MCLK. Note that MCLK is always required when using HPOUTL, HPOUTR, LINEOUTL or LINEOUTR.

CLOCKING CONFIGURATION

The WM8904 supports a wide range of standard audio sample rates from 8kHz to 48kHz. The Automatic Clocking Configuration simplifies the configuration of the clock dividers in the WM8904 by deriving most of the necessary parameters from a minimum number of user registers.

The SAMPLE_RATE field selects the sample rate, fs, of the ADC and DAC. Note that the same sample rate always applies to the ADC and DAC.

The CLK_SYS_RATE field must be set according to the ratio of SYSCLK to fs. When these fields are set correctly, the Sample Rate Decoder circuit automatically determines the clocking configuration for all other circuits within the WM8904.

A high performance mode of DAC operation can be selected by setting the DAC_OSR128 bit; in 48kHz sample mode, the DAC_OSR128 feature results in 128x oversampling. Audio performance is improved, but power consumption is also increased.

REGISTER ADDRESS	BIT	LABEL	DEFAULT	DESCRIPTION
R33 (21h) DAC Digital 1	6	DAC_OSR128	0	DAC Oversample Rate Select 0 = Low power (normal OSR) 1 = High performance (double OSR)
R21 (15h) Clock Rates 1	13:10	CLK_SYS_RATE [3:0]	0011	Selects the SYSCLK / fs ratio 0000 = 64 0001 = 128 0010 = 192 0011 = 256 0100 = 384 0101 = 512 0110 = 768 0111 = 1024 1000 = 1408 1001 = 1536
	2:0	SAMPLE_RATE [2:0]	101	Selects the Sample Rate (fs) 000 = 8kHz 001 = 11.025kHz, 12kHz 010 = 16kHz 011 = 22.05kHz, 24kHz 100 = 32kHz 101 = 44.1kHz, 48kHz 110 to 111 = Reserved

Table 62 Automatic Clocking Configuration Control

ADC / DAC CLOCK CONTROL

The clocking of the ADC and DAC circuits is derived from CLK_DSP, which is enabled by CLK_DSP_ENA. CLK_DSP is generated from SYSCLK which is separately enabled, using the register bit CLK_SYS_ENA.

Two modes of ADC operation can be selected using the ADC_OSR128 bit; in 48kHz sample mode, setting the ADC_OSR128 bit results in 128x oversampling. This bit is enabled by default, giving best audio performance. Deselecting this bit gives 64x oversampling in 48kHz mode, resulting in decreased power consumption.

Higher performance DAC operation can be achieved by increasing the DAC oversample rate - see Table 62.

The ADC / DAC Clock Control registers are defined in Table 63.

REGISTER ADDRESS	BIT	LABEL	DEFAULT	DESCRIPTION
R10 (0Ah) Analog ADC 0	0	ADC_OSR128	1	ADC Oversampling Ratio 0 = Low Power (64 x fs) 1 = High Performance (128 x fs)
R22 (16h) Clock Rates 2	1	CLK_DSP_ENA	0	DSP Clock enable 0 = Disabled 1 = Enabled

Table 63 ADC / DAC Clock Control

OPCLK CONTROL

A clock output (OPCLK) derived from SYSCLK may be output on a GPIO pin. This clock is enabled by register bit OPCLK_ENA, and its frequency is controlled by OPCLK_DIV.

This output of this clock is also dependent upon the GPIO register settings described under “General Purpose Input/Output (GPIO)”.

REGISTER ADDRESS	BIT	LABEL	DEFAULT	DESCRIPTION
R22 (16h) Clock Rates 2	3	OPCLK_ENA	0	GPIO Clock Output Enable 0 = disabled 1 = enabled
R26 (1Ah) Audio Interface 2	11:8	OPCLK_DIV [3:0]	0000	GPIO Output Clock Divider 0000 = SYSCLK 0001 = SYSCLK / 2 0010 = SYSCLK / 3 0011 = SYSCLK / 4 0100 = SYSCLK / 5.5 0101 = SYSCLK / 6 0110 = SYSCLK / 8 0111 = SYSCLK / 12 1000 = SYSCLK / 16 1001 to 1111 = Reserved

Table 64 OPCLK Control

TOCLK CONTROL

A slow clock (TOCLK) is derived from the internally generated 256kHz clock to enable input de-bouncing and volume update timeout functions. This clock is enabled by register bit TOCLK_ENA, and its frequency is controlled by TOCLK_RATE and TOCLK_RATE_X4, as described in Table 65.

REGISTER ADDRESS	BIT	LABEL	DEFAULT	DESCRIPTION
R22 (16h) Clock Rates 2	12	TOCLK_RATE	0	TOCLK Rate Divider (/2) 0 = f / 2 1 = f / 1
	0	TOCLK_ENA	0	Zero Cross timeout enable 0 = Disabled 1 = Enabled
R20 (14h) Clock Rates 0	14	TOCLK_RATE_ DIV16	0	TOCLK Rate Divider (/16) 0 = f / 1 1 = f / 16
	13	TOCLK_RATE_ X4	0	TOCLK Rate Multiplier 0 = f x 1 1 = f x 4

Table 65 TOCLK Control

A list of possible TOCLK rates is provided in Table 66.

TOCLK_RATE	TOCLK_RATE_X4	TOCLK_RATE_DIV16	TOCLK	
			FREQ (Hz)	PERIOD (ms)
1	1	0	1000	1
0	1	0	500	2
1	0	0	250	4
0	0	0	125	8
1	1	1	62.5	16
0	1	1	31.25	32
1	0	1	15.625	64
0	0	1	7.8125	128

Table 66 TOCLK Rates

ADC / DAC OPERATION AT 88.2K / 96K

The WM8904 supports ADC or DAC operation at 88.2kHz and 96kHz sample rates. This section details specific conditions applicable to these operating modes. Note that simultaneous ADC and DAC operation at 88.2kHz or 96kHz is not possible.

For DAC operation at 88.2kHz or 96kHz sample rates, the available clocking configurations are detailed in Table 67. DAC operation at these sample rates is achieved by setting the SAMPLE_RATE field to half the required sample rate (eg. select 48kHz for 96kHz mode).

For DAC operation at 88.2kHz or 96kHz sample rates, the ADCs must both be disabled (ADCL_ENA = 0 and ADCR_ENA = 0). Also, the DAC_OSR128 register must be set to 0. ReTune™ Mobile can not be used during 88.2kHz or 96kHz operation, so EQ_ENA must be set to 0.

The SYSCLK frequency is derived from MCLK. The maximum MCLK frequency is defined in the “Signal Timing Requirements” section.

SAMPLE RATE	REGISTER CONFIGURATION	CLOCKING RATIO
88.2kHz	SAMPLE_RATE = 101 CLK_SYS_RATE = 0001 (SYSCLK / fs = 128) BCLK_DIV = 00010 LRCLK_RATE = 040h	SYSCLK = 128 x fs
96kHz	SAMPLE_RATE = 101 CLK_SYS_RATE = 0001 (SYSCLK / fs = 128) BCLK_DIV = 00010 LRCLK_RATE = 040h	SYSCLK = 128 x fs

Table 67 DAC Operation at 88.2kHz and 96kHz Sample Rates

For ADC operation at 88.2kHz or 96kHz sample rates, the available clocking configurations are detailed in Table 68.

ADC operation at these sample rates is achieved by setting the SAMPLE_RATE field to half the required sample rate (eg. select 48kHz for 96kHz mode). For ADC operation at 88.2kHz or 96kHz sample rates, the DACs must both be disabled (DACL_ENA = 0 and DACR_ENA = 0). Note that ADC_OSR128, ADC_128_OSR_TST_MODE, and ADC_BIASX1P5 must be configured according to Table 68.

The SYSCLK frequency is derived from MCLK. The maximum MCLK frequency is defined in the "Signal Timing Requirements" section.

SAMPLE RATE	REGISTER CONFIGURATION	CLOCKING RATIO
88.2kHz	SAMPLE_RATE = 101 CLK_SYS_RATE = 0001 (SYSCLK / fs = 128) BCLK_DIV = 00010 LRCLK_RATE = 040h ADC_OSR128 = 0 ADC_128_OSR_TST_MODE = 0 ADC_BIASX1P5 = 0	SYSCLK = 128 x fs
96kHz	SAMPLE_RATE = 101 CLK_SYS_RATE = 0001 (SYSCLK / fs = 128) BCLK_DIV = 00010 LRCLK_RATE = 040h ADC_OSR128 = 0 ADC_128_OSR_TST_MODE = 0 ADC_BIASX1P5 = 0	SYSCLK = 128 x fs

Table 68 ADC Operation at 88.2kHz and 96kHz Sample Rates

FREQUENCY LOCKED LOOP (FLL)

The integrated FLL can be used to generate SYSCLK from a wide variety of different reference sources and frequencies. The FLL can use either MCLK, BCLK or LRCLK as its reference, which may be a high frequency (eg. 12.288MHz) or low frequency (eg. 32,768kHz) reference. The FLL is tolerant of jitter and may be used to generate a stable SYSCLK from a less stable input signal. The FLL characteristics are summarised in "Electrical Characteristics".

Note that the FLL can be used to generate a free-running clock in the absence of an external reference source. This is described in the "Free-Running FLL Clock" section below.

The FLL is enabled using the FLL_ENA register bit. Note that, when changing FLL settings, it is recommended that the digital circuit be disabled via FLL_ENA and then re-enabled after the other register settings have been updated. When changing the input reference frequency F_{REF}, it is recommended the FLL be reset by setting FLL_ENA to 0.

The FLL_CLK_REF_SRC field allows MCLK, BCLK or LRCLK to be selected as the input reference clock.

The field FLL_CLK_REF_DIV provides the option to divide the input reference (MCLK, BCLK or LRCLK) by 1, 2, 4 or 8. This field should be set to bring the reference down to 13.5MHz or below. For best performance, it is recommended that the highest possible frequency - within the 13.5MHz limit - should be selected.

The field FLL_CTRL_RATE controls internal functions within the FLL; it is recommended that only the default setting be used for this parameter. FLL_GAIN controls the internal loop gain and should be set to the recommended value quoted in Table 71.

The FLL output frequency is directly determined from FLL_FRATIO, FLL_OUTDIV and the real number represented by FLL_N and FLL_K. The field FLL_N is an integer (LSB = 1); FLL_K is the fractional portion of the number (MSB = 0.5). The fractional portion is only valid in Fractional Mode when enabled by the field FLL_FRACN_ENA.

It is recommended that FLL_FRACN_ENA is enabled at all times. Power consumption in the FLL is reduced in integer mode; however, the performance may also be reduced, with increased noise or jitter on the output.

If low power consumption is required, then FLL settings must be chosen when N.K is an integer (ie. FLL_K = 0). In this case, the fractional mode can be disabled by setting FLL_FRACN_ENA = 0.

For best FLL performance, a non-integer value of N.K is required. In this case, the fractional mode must be enabled by setting FLL_FRACN_ENA = 1. The FLL settings must be adjusted, if necessary, to produce a non-integer value of N.K.

The FLL output frequency is generated according to the following equation:

$$F_{OUT} = (F_{VCO} / FLL_OUTDIV)$$

The FLL operating frequency, F_{VCO} is set according to the following equation:

$$F_{VCO} = (F_{REF} \times N.K \times FLL_FRATIO)$$

See Table 71 for the coding of the FLL_OUTDIV and FLL_FRATIO fields.

F_{REF} is the input frequency, as determined by FLL_CLK_REF_DIV.

F_{VCO} must be in the range 90-100 MHz. Frequencies outside this range cannot be supported.

Note that the output frequencies that do not lie within the ranges quoted above cannot be guaranteed across the full range of device operating temperatures.

In order to follow the above requirements for F_{VCO}, the value of FLL_OUTDIV should be selected according to the desired output F_{OUT}. The divider, FLL_OUTDIV, must be set so that F_{VCO} is in the range 90-100MHz. The available divisions are integers from 4 to 64. Some typical settings of FLL_OUTDIV are noted in Table 69.

OUTPUT FREQUENCY F_{OUT}	FLL_OUTDIV
2.8125 MHz - 3.125 MHz	011111 (divide by 32)
3.75 MHz - 4.1667 MHz	011000 (divide by 24)
5.625 MHz - 6.25 MHz	001111 (divide by 16)
11.25 MHz - 12.5 MHz	000111 (divide by 8)
18 MHz - 20 MHz	000100 (divide by 5)
22.5 MHz - 25 MHz	000011 (divide by 4)

Table 69 Selection of FLL_OUTDIV

The value of FLL_FRATIO should be selected as described in Table 70.

REFERENCE FREQUENCY F_{REF}	FLL_FRATIO
1MHz - 13.5MHz	0h (divide by 1)
256kHz - 1MHz	1h (divide by 2)
128kHz - 256kHz	2h (divide by 4)
64kHz - 128kHz	3h (divide by 8)
Less than 64kHz	4h (divide by 16)

Table 70 Selection of FLL_FRATIO

In order to determine the remaining FLL parameters, the FLL operating frequency, F_{VCO}, must be calculated, as given by the following equation:

$$F_{VCO} = (F_{OUT} \times FLL_OUTDIV)$$

The value of FLL_N and FLL_K can then be determined as follows:

$$N.K = F_{VCO} / (FLL_FRATIO \times F_{REF})$$

See Table 71 for the coding of the FLL_OUTDIV and FLL_FRATIO fields.

Note that F_{REF} is the input frequency, after division by FLL_CLK_REF_DIV, where applicable.

In FLL Fractional Mode, the fractional portion of the N.K multiplier is held in the FLL_K register field. This field is coded as a fixed point quantity, where the MSB has a weighting of 0.5. Note that, if desired, the value of this field may be calculated by multiplying K by 2^{16} and treating FLL_K as an integer value, as illustrated in the following example:

If N.K = 8.192, then K = 0.192

Multiplying K by 2^{16} gives 0.192 x 65536 = 12582.912 (decimal)

Apply rounding to the nearest integer = 12583 (decimal) = 3127 (hex)

For best performance, FLL Fractional Mode should always be used. Therefore, if the calculations yield an integer value of N.K, then it is recommended to adjust FLL_OUTDIV in order to obtain a non-integer value of N.K. Care must always be taken to ensure that the FLL operating frequency, F_{VCO}, is within its recommended limits of 90-100 MHz.

The register fields that control the FLL are described in Table 71. Example settings for a variety of reference frequencies and output frequencies are shown in Table 73.

REGISTER ADDRESS	BIT	LABEL	DEFAULT	DESCRIPTION
R116 (74h) FLL Control 1	2	FLL_FRACN_ENA	0	FLL Fractional enable 0 = Integer Mode 1 = Fractional Mode Fractional Mode (FLL_FRACN_ENA=1) is recommended in all cases
	1	FLL_OSC_ENA	0	FLL Oscillator enable 0 = Disabled 1 = Enabled FLL_OSC_ENA must be enabled before enabling FLL_ENA. Note that this field is required for free-running FLL modes only.
	0	FLL_ENA	0	FLL Enable 0 = Disabled 1 = Enabled FLL_OSC_ENA must be enabled before enabling FLL_ENA.
R117 (75h) FLL Control 2	13:8	FLL_OUTDIV [5:0]	00_0000	FLL FOUT clock divider 00_0000 = Reserved 00_0001 = Reserved 00_0010 = Reserved 00_0011 = 4 00_0100 = 5 00_0101 = 6 … 11_1110 = 63 11_1111 = 64 (FOUT = FVCO / FLL_OUTDIV)
	6:4	FLL_CTRL_RATE [2:0]	000	Frequency of the FLL control block 000 = FVCO / 1 (Recommended value) 001 = FVCO / 2 010 = FVCO / 3 011 = FVCO / 4 100 = FVCO / 5 101 = FVCO / 6 110 = FVCO / 7 111 = FVCO / 8 Recommended that these are not changed from default.

REGISTER ADDRESS	BIT	LABEL	DEFAULT	DESCRIPTION
	2:0	FLL_FRATIO [2:0]	111	F_{VCO} clock divider 000 = divide by 1 001 = divide by 2 010 = divide by 4 011 = divide by 8 1XX = divide by 16 000 recommended for F_{REF} > 1MHz 100 recommended for F_{REF} < 64kHz
R118 (76h) FLL Control 3	15:0	FLL_K [15:0]	0000h	Fractional multiply for F_{REF} (MSB = 0.5)
R119 (77h) FLL Control 4	14:5	FLL_N [9:0]	177h	Integer multiply for F_{REF} (LSB = 1)
	3:0	FLL_GAIN [3:0]	0h	Gain applied to error 0000 = x 1 (Recommended value) 0001 = x 2 0010 = x 4 0011 = x 8 0100 = x 16 0101 = x 32 0110 = x 64 0111 = x 128 1000 = x 256 Recommended that these are not changed from default.
R120 (78h) FLL Control 5	4:3	FLL_CLK_REF_ DIV [1:0]	00	FLL Clock Reference Divider 00 = MCLK / 1 01 = MCLK / 2 10 = MCLK / 4 11 = MCLK / 8 MCLK (or other input reference) must be divided down to <=13.5MHz. For lower power operation, the reference clock can be divided down further if desired.
	1:0	FLL_CLK_REF_ SRC [1:0]	00	FLL Clock source 00 = MCLK 01 = BCLK 10 = LRCLK 11 = Reserved

Table 71 FLL Register Map

FREE-RUNNING FLL CLOCK

The FLL can generate a clock signal even when no external reference is available. However, it should be noted that the accuracy of this clock is reduced, and a reference source should always be used where possible. Note that, in free-running mode, the FLL is not sufficiently accurate for hi-fi ADC or DAC applications. However, the free-running mode is suitable for clocking most other functions, including the Write Sequencer, Charge Pump, DC Servo and Class W output driver.

If an accurate reference clock is available at FLL start-up, then the FLL should be configured as described above. The FLL will continue to generate a stable output clock after the reference input is stopped or disconnected.

If no reference clock is available at the time of starting up the FLL, then an internal clock frequency of approximately 12MHz can be generated by enabling the FLL Analogue Oscillator using the FLL_OSC_ENA register bit, and setting F_{OUT} clock divider to divide by 8 (FLL_OUTDIV = 07h), as defined in Table 71. Under recommended operating conditions, the FLL output may be forced to approximately 12MHz by then enabling the FLL_FRC_NCO bit and setting FLL_FRC_NCO_VAL to 19h (see Table 72). The resultant SYSCLK delivers the required clock frequencies for the Class W output driver, DC Servo, Charge Pump and other functions. Note that the value of FLL_FRC_NCO_VAL may be adjusted to control F_{OUT}, but care should be taken to maintain the correct relationship between SYSCLK and the aforementioned functional blocks.

REGISTER ADDRESS	BIT	LABEL	DEFAULT	DESCRIPTION
R248 (F8h) FLL NCO Test 1	5:0	FLL_FRC_NCO_VAL [5:0]	01_1001	FLL Forced oscillator value Valid range is 000000 to 111111 0x19h (011001) = 12MHz approx (Note that this field is required for free-running FLL modes only)
R247 (F7h) FLL NCO Test 0	0	FLL_FRC_NCO	0	FLL Forced control select 0 = Normal 1 = FLL oscillator controlled by FLL_FRC_NCO_VAL (Note that this field is required for free-running FLL modes only)

Table 72 FLL Free-Running Mode

In both cases described above, the FLL must be selected as the SYSCLK source by setting SYSCLK_SRC (see Table 61). Note that, in the absence of any reference clock, the FLL output is subject to a very wide tolerance. See “Electrical Characteristics” for details of the FLL accuracy.

GPIO OUTPUTS FROM FLL

The WM8904 has an internal signal which indicates whether the FLL Lock has been achieved. The FLL Lock status is an input to the Interrupt control circuit and can be used to trigger an Interrupt event - see “Interrupts”.

The FLL Lock signal can be output directly on a GPIO pin as an external indication of FLL Lock. See “General Purpose Input/Output (GPIO)” for details of how to configure a GPIO pin to output the FLL Lock signal.

The FLL Clock can be output directly on a GPIO pin as a clock signal for other circuits. Note that the FLL Clock may be output even if the FLL is not selected as the WM8904 SYSCLK source. The clocking configuration is illustrated in Figure 59. See “General Purpose Input/Output (GPIO)” for details of how to configure a GPIO pin to output the FLL Clock.

EXAMPLE FLL CALCULATION

To generate 12.288 MHz output (F_{OUT}) from a 12.000 MHz reference clock (F_{REF}):

- Set FLL_CLK_REF_DIV in order to generate F_{REF} <=13.5MHz:
  FLL_CLK_REF_DIV = 00 (divide by 1)
- Set FLL_CTRL_RATE to the recommended setting:
  FLL_CTRL_RATE = 000 (divide by 1)
- Set FLL_GAIN to the recommended setting:
  FLL_GAIN = 0000 (multiply by 1)
- Set FLL_OUTDIV for the required output frequency as shown in Table 69:-
  F_{OUT} = 12.288 MHz, therefore FLL_OUTDIV = 07h (divide by 8)
- Set FLL_FRATIO for the given reference frequency as shown in Table 70:
  F_{REF} = 12MHz, therefore FLL_FRATIO = 0h (divide by 1)
- Calculate F_{VCO} as given by F_{VCO} = F_{OUT} x FLL_OUTDIV:-
  F_{VCO} = 12.288 x 8 = 98.304MHz
- Calculate N.K as given by N.K = F_{VCO} / (FLL_FRATIO x F_{REF}):
  N.K = 98.304 / (1 x 12) = 8.192
- Determine FLL_N and FLL_K from the integer and fractional portions of N.K:-
  FLL_N is 8. FLL_K is 0.192
- Confirm that N.K is a fractional quantity and set FLL_FRACN_ENA:
  N.K is fractional. Set FLL_FRACN_ENA = 1.
  Note that, if N.K is an integer, then an alternative value of FLL_FRATIO should be selected in order to produce a fractional value of N.K.

EXAMPLE FLL SETTINGS

Table 73 provides example FLL settings for generating common SYSCLK frequencies from a variety of low and high frequency reference inputs.

F_{REF}	F_{OUT}	FLL_CLK_ REF_DIV	F_{VCO}	FLL_N	FLL_K	FLL_ FRATIO	FLL_ OUTDIV	FLL_ FRACN _ENA
32.768 kHz	12.288 MHz	Divide by 1 (0h)	98.304 MHz	187 (0BBh)	0.5 (8000h)	16 (4h)	8 (7h)	1
32.768 kHz	11.288576 MHz	Divide by 1 (0h)	90.308608 MHz	344 (158h)	0.5 (8000h)	8 (3h)	8 (7h)	1
32.768 kHz	11.2896 MHz	Divide by 1 (0h)	90.3168 MHz	344 (158h)	0.53125 (8800h)	8 (3h)	8 (7h)	1
48 kHz	12.288 MHz	Divide by 1 (0h)	98.304 MHz	256 (100h)	0 (0000h)	8 (3h)	8 (7h)	0
12.000 MHz	12.288 MHz	Divide by 1 (0h)	98.3040 MHz	8 (008h)	0.192 (3127h)	1 (0h)	8 (7h)	1
12.000 MHz	11.289597 MHz	Divide by 1 (0h)	90.3168 MHz	7 (007h)	0.526398 (86C2h)	1 (0h)	8 (7h)	1
12.288 MHz	12.288 MHz	Divide by 1 (0h)	98.304 MHz	8 (008h)	0 (0000h)	1 (0h)	8 (7h)	0
12.288 MHz	11.2896 MHz	Divide by 1 (0h)	90.3168 MHz	7 (007h)	0.35 (599Ah)	1 (0h)	8 (7h)	1
13.000 MHz	12.287990 MHz	Divide by 1 (0h)	98.3040 MHz	7 (007h)	0.56184 (8FD5h)	1 (0h)	8 (7h)	1
13.000 MHz	11.289606 MHz	Divide by 1 (0h)	90.3168 MHz	6 (006h)	0.94745 (F28Ch)	1 (0h)	8 (7h)	1
19.200 MHz	12.287988 MHz	Divide by 2 (1h)	98.3039 MHz	5 (005h)	0.119995 (1EB8h)	1 (0h)	8 (7h)	1
19.200 MHz	11.289588 MHz	Divide by 2 (1h)	90.3168 MHz	4 (004h)	0.703995 (B439h)	1 (0h)	8 (7h)	1

Table 73 Example FLL Settings

GENERAL PURPOSE INPUT/OUTPUT (GPIO)

The WM8904 provides four multifunction pins that can be configured to provide a number of different functions. These are digital input/output pins on the DBVDD power domain. The GPIO pins are:

- IRQ/GPIO1
- GPIO2
- GPIO3
- BCLK/GPIO4

Each general purpose I/O pin can be configured to be a GPIO input or configured as one of a number of output functions. Signal de-bouncing can be selected on GPIO input pins for use with jack/button detect applications. Table 74 lists the functions that are available on each of the GPIO pins.

	GPIO PINS			
GPIO Pin Function	**IRQ / GPIO1**	**GPIO2**	**GPIO3**	**BCLK / GPIO4**
GPIO input (including jack/button detect)	Yes	Yes	Yes	Yes
GPIO output	Yes	Yes	Yes	Yes
BCLK	No	No	No	Yes
Interrupt (IRQ)	Yes	Yes	Yes	Yes
MICBIAS current detect	Yes	Yes	Yes	Yes
MICBIAS short-circuit detect	Yes	Yes	Yes	Yes
Digital microphone interface (DMIC clock output)	Yes	Yes	Yes	Yes
FLL Lock output	Yes	Yes	Yes	Yes
FLL Clock output	Yes	Yes	Yes	Yes

Table 74 GPIO Functions Available

IRQ/GPIO1

The IRQ/GPIO1 pin is configured using the register bits described in Table 75. By default, this pin is IRQ output with pull-down resistor enabled.

REGISTER ADDRESS	BIT	LABEL	DEFAULT	DESCRIPTION
R121 (79h) GPIO Control 1	5	GPIO1_PU	0	GPIO1 pull-up resistor enable 0 = pull-up disabled 1 = pull-up enabled
	4	GPIO1_PD	1	GPIO1 pull-down resistor enable 0 = pull-down disabled 1 = pull-down enabled
	3:0	GPIO1_SEL [3:0]	0100	GPIO1 Function Select 0000 = Input pin 0001 = Clock output (f=SYSCLK/OPCLKDIV) 0010 = Logic '0' 0011 = Logic '1' 0100 = IRQ (default) 0101 = FLL Lock 0110 = Mic Detect 0111 = Mic Short 1000 = DMIC clock out 1001 = FLL Clock Output 1010 to 1111 = Reserved

Table 75 IRQ/GPIO1 Control

GPIO2

The GPIO2 pin is configured using the register bits described in Table 76. By default, this pin is GPIO input with pull-down resistor enabled.

REGISTER ADDRESS	BIT	LABEL	DEFAULT	DESCRIPTION
R122 (7Ah) GPIO Control 2	5	GPIO2_PU	0	GPIO2 pull-up resistor enable 0 = pull-up disabled 1 = pull-up enabled
	4	GPIO2_PD	1	GPIO2 pull-down resistor enable 0 = pull-down disabled 1 = pull-down enabled
	3:0	GPIO2_SEL [3:0]	0000	GPIO2 Function Select 0000 = Input pin (default) 0001 = Clock output (f=SYSCLK/OPCLKDIV) 0010 = Logic '0' 0011 = Logic '1' 0100 = IRQ 0101 = FLL Lock 0110 = Mic Detect 0111 = Mic Short 1000 = DMIC clock out 1001 = FLL Clock Output 1010 to 1111 = Reserved

Table 76 GPIO2 Control

GPIO3

The GPIO3 pin is configured using the register bits described in Table 77. By default, this pin is GPIO input with pull-down resistor enabled.

REGISTER ADDRESS	BIT	LABEL	DEFAULT	DESCRIPTION
R123 (7Bh) GPIO Control 3	5	GPIO3_PU	0	GPIO3 pull-up resistor enable 0 = pull-up disabled 1 = pull-up enabled
	4	GPIO3_PD	1	GPIO3 pull-down resistor enable 0 = pull-down disabled 1 = pull-down enabled
	3:0	GPIO3_SEL [3:0]	0000	GPIO3 Function Select 0000 = Input pin (default) 0001 = Clock output (f=SYSCLK/OPCLKDIV) 0010 = Logic '0' 0011 = Logic '1' 0100 = IRQ 0101 = FLL Lock 0110 = Mic Detect 0111 = Mic Short 1000 = DMIC clock out 1001 = FLL Clock Output 1010 to 1111 = Reserved

Table 77 GPIO3 Control

BCLK/GPIO4

The BCLK/GPIO4 pin is configured using the register bits described in Table 78. By default, this pin provides the BCLK function associated with the Digital Audio Interface. The BCLK function can operate in slave mode (BCLK input) or in master mode (BCLK output), depending on the BCLK_DIR register bit as described in the "Digital Audio Interface" section.

It is possible to configure the BCLK/GPIO4 pin to provide various GPIO functions; in this case, the BCLK function is provided using the MCLK pin. Note that the BCLK function is always in slave mode (BCLK input) in this mode.

To select the GPIO4 functions, it is required to set BCLK_DIR = 0 (see Table 56) and to set GPIO_BCLK_MODE_ENA = 1 (see Table 78 below). In this configuration, the MCLK input is used as the bit-clock (BCLK) for the Digital Audio Interface.

When the BCLK/GPIO4 pin is configured as GPIO4, then the pin function is determined by the GPIO_BCLK_SEL register field.

REGISTER ADDRESS	BIT	LABEL	DEFAULT	DESCRIPTION
R124 (7Ch) GPIO Control 4	7	GPIO_BCLK_MODE_ ENA	0	Selects BCLK/GPIO4 pin function 0 = BCLK/GPIO4 is used as BCLK 1 = BCLK/GPIO4 is used as GPIO. MCLK provides the BCLK in the AIF in this mode.
	3:0	GPIO_BCLK_SEL [3:0]	0000	GPIO_BCLK function select: 0000 = Input Pin (default) 0001 = Clock output (f=SYSCLK/OPCLKDIV) 0010 = Logic '0' 0011 = Logic '1' 0100 = IRQ 0101 = FLL Lock 0110 = Mic Detect 0111 = Mic Short 1000 = DMIC clock out 1001 = FLL Clock Output 1010 to 1111 = Reserved

Table 78 BCLK/GPIO4 Control

INTERRUPTS

The Interrupt Controller has multiple inputs; these include the GPIO input pins and the MICBIAS current detection circuits. Any combination of these inputs can be used to trigger an Interrupt (IRQ) event.

WM8904 interrupt events may be triggered in response to external GPIO inputs, FLL Lock status, MICBIAS status or Write Sequencer status. Note that the GPIO inputs (including GPI7 and GPI8) are only supported as interrupt events when the respective pin is configured as a GPIO input.

There is an Interrupt Status field associated with each of the IRQ inputs. These are contained in the Interrupt Status Register (R127), as described in Table 79. The status of the IRQ inputs can be read from this register at any time, or in response to the Interrupt Output being signalled via a GPIO pin.

Individual mask bits can select or deselect different functions from the Interrupt controller. These are listed within the Interrupt Status Mask register (R128), as described in Table 80. Note that the Interrupt Status fields remain valid, even when masked, but the masked bits will not cause the Interrupt (IRQ) output to be asserted.

The Interrupt (IRQ) output represents the logical 'OR' of all unmasked IRQ inputs. The bits within the Interrupt Status register (R127) are latching fields and, once set, are not reset until a '1' is written to the respective register bit in the Interrupt Status Register. The Interrupt (IRQ) output is not reset until each of the unmasked IRQ inputs has been reset.

Each of the IRQ inputs can be individually inverted in the Interrupt function, enabling either active high or active low behaviour on each IRQ input. The polarity inversion is controlled using the bits contained in the Interrupt Polarity register (R129).

Each of the IRQ inputs can be debounced to ensure that spikes and transient glitches do not assert the Interrupt Output. This is selected using the bits contained in the Interrupt Debounce Register (R130).

The WM8904 Interrupt Controller circuit is illustrated in Figure 60. The associated control fields are described in Table 79 through to Table 82.

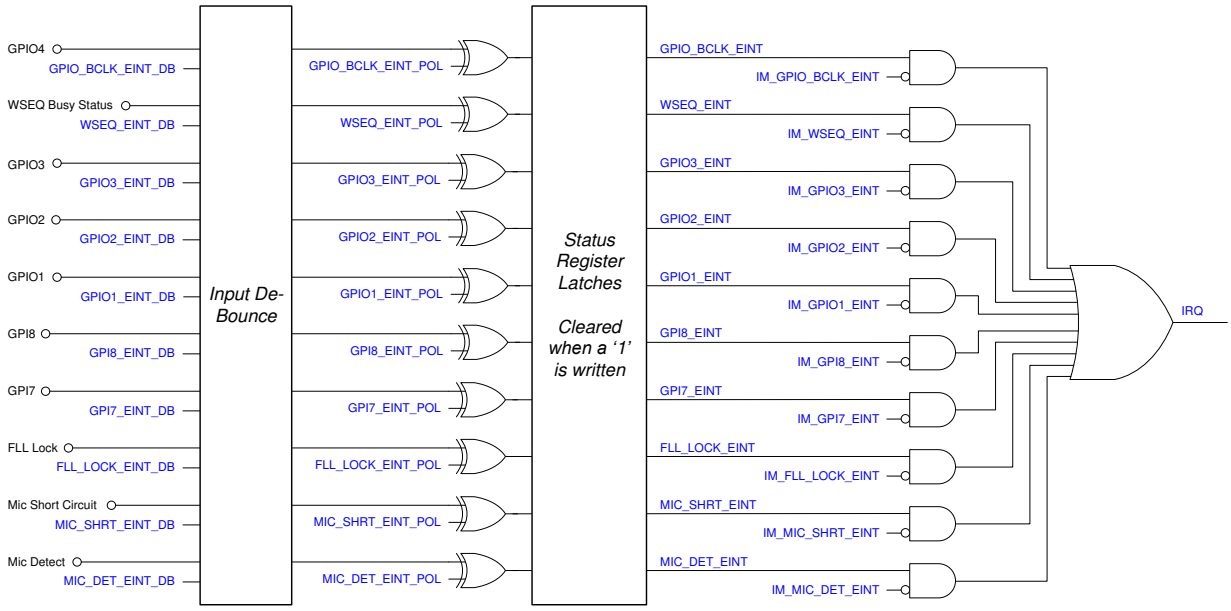

Figure 60 Interrupt Controller

REGISTER ADDRESS	BIT	LABEL	DEFAULT	DESCRIPTION
R127 (7Fh) Interrupt Status	10	IRQ	0	Logical OR of all other interrupt flags
	9	GPIO_BCLK_EINT	0	GPIO4 interrupt 0 = interrupt not set 1 = interrupt is set Cleared when a '1' is written
	8	WSEQ_EINT	0	Write Sequence interrupt 0 = interrupt not set 1 = interrupt is set Cleared when a '1' is written. Note that the read value of WSEQ_EINT is not valid whilst the Write Sequencer is Busy
	7	GPIO3_EINT	0	GPIO3 interrupt 0 = interrupt not set 1 = interrupt is set Cleared when a '1' is written
	6	GPIO2_EINT	0	GPIO2 interrupt 0 = interrupt not set 1 = interrupt is set Cleared when a '1' is written
	5	GPIO1_EINT	0	GPIO1 interrupt 0 = interrupt not set 1 = interrupt is set Cleared when a '1' is written
	4	GPI8_EINT	0	GPI8 interrupt 0 = interrupt not set 1 = interrupt is set Cleared when a '1' is written
	3	GPI7_EINT	0	GPI7 interrupt 0 = interrupt not set 1 = interrupt is set Cleared when a '1' is written
	2	FLL_LOCK_EINT	0	FLL Lock interrupt 0 = interrupt not set 1 = interrupt is set Cleared when a '1' is written
	1	MIC_SHRT_EINT	0	MICBIAS short circuit interrupt 0 = interrupt not set 1 = interrupt is set Cleared when a '1' is written
	0	MIC_DET_EINT	0	MICBIAS current detect interrupt 0 = interrupt not set 1 = interrupt is set Cleared when a '1' is written

Table 79 Interrupt Status Registers

REGISTER ADDRESS	BIT	LABEL	DEFAULT	DESCRIPTION
R128 (80h) Interrupt Status Mask	9	IM_GPIO_BCLK_EINT	1	GPIO4 interrupt mask 0 = do not mask interrupt 1 = mask interrupt
	8	IM_WSEQ_EINT	1	Write sequencer interrupt mask 0 = do not mask interrupt 1 = mask interrupt
	7	IM_GPIO3_EINT	1	GPIO3 interrupt mask 0 = do not mask interrupt 1 = mask interrupt
	6	IM_GPIO2_EINT	1	GPIO2 interrupt mask 0 = do not mask interrupt 1 = mask interrupt
	5	IM_GPIO1_EINT	1	GPIO1 interrupt mask 0 = do not mask interrupt 1 = mask interrupt
	4	IM_GPI8_EINT	1	GPI8 interrupt mask 0 = do not mask interrupt 1 = mask interrupt
	3	IM_GPI7_EINT	1	GPI7 interrupt mask 0 = do not mask interrupt 1 = mask interrupt
	2	IM_FLL_LOCK_EINT	1	FLL Lock interrupt mask 0 = do not mask interrupt 1 = mask interrupt
	1	IM_MIC_SHRT_EINT	1	MICBIAS short circuit interrupt mask 0 = do not mask interrupt 1 = mask interrupt
	0	IM_MIC_DET_EINT	1	MICBIAS current detect interrupt mask 0 = do not mask interrupt 1 = mask interrupt

Table 80 Interrupt Mask Registers

REGISTER ADDRESS	BIT	LABEL	DEFAULT	DESCRIPTION
R129 (81h) Interrupt Polarity	9	GPIO_BCLK_EINT_POL	0	GPIO4 interrupt polarity 0 = active high 1 = active low
	8	WSEQ_EINT_POL	0	Write Sequencer interrupt polarity 0 = active high (interrupt is triggered when WSEQ is busy) 1 = active low (interrupt is triggered when WSEQ is idle)
	7	GPIO3_EINT_POL	0	GPIO3 interrupt polarity 0 = active high 1 = active low
	6	GPIO2_EINT_POL	0	GPIO2 interrupt polarity 0 = active high 1 = active low

REGISTER ADDRESS	BIT	LABEL	DEFAULT	DESCRIPTION
	5	GPIO1_EINT_POL	0	GPIO1 interrupt polarity 0 = active high 1 = active low
	4	GPI8_EINT_POL	0	GPI8 interrupt polarity 0 = active high 1 = active low
	3	GPI7_EINT_POL	0	GPI7 interrupt polarity 0 = active high 1 = active low
	2	FLL_LOCK_EINT_POL	0	FLL Lock interrupt polarity 0 = active high (interrupt is triggered when FLL Lock is reached) 1 = active low (interrupt is triggered when FLL is not locked)
	1	MIC_SHRT_EINT_POL	0	MICBIAS short circuit interrupt polarity 0 = active high 1 = active low
	0	MIC_DET_EINT_POL	0	MICBIAS current detect interrupt polarity 0 = active high 1 = active low

Table 81 Interrupt Polarity Registers

REGISTER ADDRESS	BIT	LABEL	DEFAULT	DESCRIPTION
R130 (82h) Interrupt Debounce	9	GPIO_BCLK_EINT_DB	0	GPIO4 interrupt debounce 0 = disabled 1 = enabled
	8	WSEQ_EINT_DB	0	Write Sequencer interrupt debounce enable 0 = disabled 1 = enabled
	7	GPIO3_EINT_DB	0	GPIO3 input debounce 0 = disabled 1 = enabled
	6	GPIO2_EINT_DB	0	GPIO2 input debounce 0 = disabled 1 = enabled
	5	GPIO1_EINT_DB	0	GPIO1 input debounce 0 = disabled 1 = enabled
	4	GPI8_EINT_DB	0	GPI8 input debounce 0 = disabled 1 = enabled
	3	GPI7_EINT_DB	0	GPI7 input debounce 0 = disabled 1 = enabled
	2	FLL_LOCK_EINT_DB	0	FLL Lock debounce 0 = disabled 1 = enabled

REGISTER ADDRESS	BIT	LABEL	DEFAULT	DESCRIPTION
	1	MIC_SHRT_EINT_DB	0	MICBIAS short circuit interrupt debounce 0 = disabled 1 = enabled
	0	MIC_DET_EINT_DB	0	MICBIAS current detect interrupt debounce 0 = disabled 1 = enabled

Table 82 Interrupt Debounce Registers

USING IN1L AND IN1R AS INTERRUPT INPUTS

IN1L pin has three input functions.

- Analogue audio input
- Digital microphone input (DMICDAT1)
- Digital interrupt input (GPI7)

IN1R pin has three input functions.

- Analogue audio input
- Digital microphone input (DMICDAT2)
- Digital interrupt input (GPI8)

To use these pins as digital interrupt inputs, they must be enabled using the GPI7_ENA and GPI8_ENA bits as described in Table 83.

REGISTER ADDRESS	BIT	LABEL	DEFAULT	DESCRIPTION
R124 (7Ch) GPIO Control 4	9	GPI7_ENA	0	GPI7 input enable 0 = disabled 1 = enabled
	8	GPI8_ENA	0	GPI8 input enable 0 = disabled 1 = enabled

Table 83 Enabling IN1L and IN1R as Interrupts GPI7 and GPI8

CONTROL INTERFACE

The WM8904 is controlled by writing to registers through a 2-wire serial control interface. Readback is available for all registers, including Chip ID, power management status and GPIO status.

Note that, if it cannot be assured that MCLK is present when accessing the register map, then it is required to set CLK_SYS_ENA = 0 to ensure correct operation. See “Clocking and Sample Rates” for details of CLK_SYS_ENA.

The WM8904 is a slave device on the control interface; SCLK is a clock input, while SDA is a bi-directional data pin. To allow arbitration of multiple slaves (and/or multiple masters) on the same interface, the WM8904 transmits logic 1 by tri-stating the SDA pin, rather than pulling it high. An external pull-up resistor is required to pull the SDA line high so that the logic 1 can be recognised by the master.

In order to allow many devices to share a single 2-wire control bus, every device on the bus has a unique 8-bit device ID (this is not the same as the 8-bit address of each register in the WM8904). The WM8904 device ID is 0011 0100 (34h). The LSB of the device ID is the Read/Write bit; this bit is set to logic 1 for “Read” and logic 0 for “Write”.

The WM8904 operates as a slave device only. The controller indicates the start of data transfer with a high to low transition on SDA while SCLK remains high. This indicates that a device ID, register address and data will follow. The WM8904 responds to the start condition and shifts in the next eight bits on SDA (8-bit device ID including Read/Write bit, MSB first). If the device ID received matches the device ID of the WM8904, then the WM8904 responds by pulling SDA low on the next clock pulse (ACK). If the device ID is not recognised or the R/W bit is ‘1’ when operating in write only mode, the WM8904 returns to the idle condition and waits for a new start condition and valid address.

If the device ID matches the device ID of the WM8904, the data transfer continues as described below. The controller indicates the end of data transfer with a low to high transition on SDA while SCLK remains high. After receiving a complete address and data sequence the WM8904 returns to the idle state and waits for another start condition. If a start or stop condition is detected out of sequence at any point during data transfer (i.e. SDA changes while SCLK is high), the device returns to the idle condition.

The WM8904 supports the following read and write operations:

- Single write
- Single read
- Multiple write using auto-increment
- Multiple read using auto-increment

The sequence of signals associated with a single register write operation is illustrated in Figure 61.

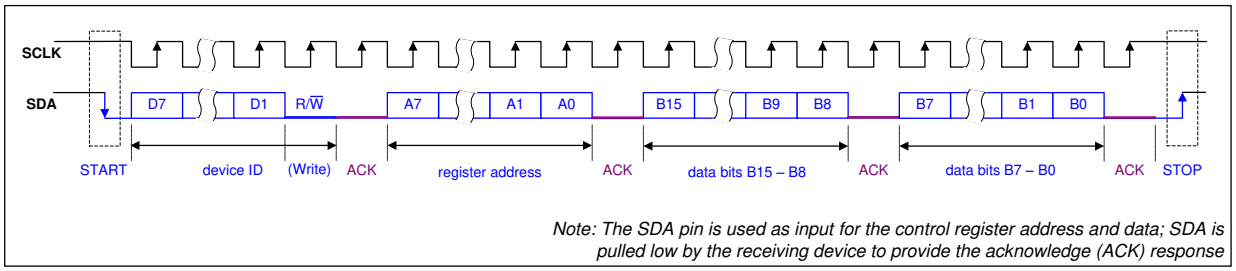

Figure 61 Control Interface Register Write

The sequence of signals associated with a single register read operation is illustrated in Figure 62.

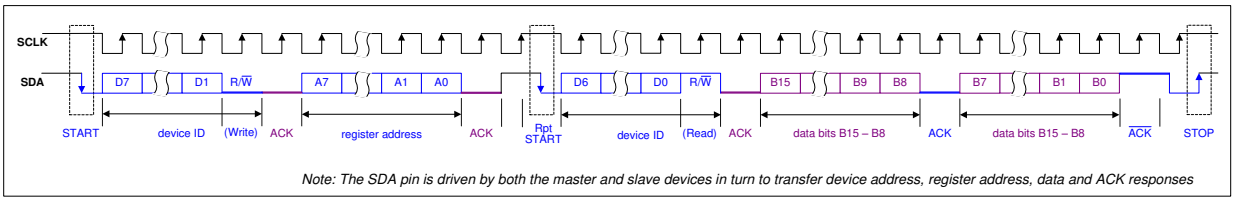

Figure 62 Control Interface Register Read

The Control Interface also supports other register operations, as listed above. The interface protocol for these operations is summarised below. The terminology used in the following figures is detailed in Table 84.

Note that multiple write and multiple read operations are supported using the auto-increment mode. This feature enables the host processor to access sequential blocks of the data in the WM8904 register map faster than is possible with single register operations.

TERMINOLOGY	DESCRIPTION	
S	Start Condition	
Sr	Repeated start	
A	Acknowledge (SDA Low)	
$\overline{A}$	Not Acknowledge (SDA High)	
P	Stop Condition	
R/$\overline{W}$	ReadNotWrite	0 = Write 1 = Read
[White field]	Data flow from bus master to WM8904	
[Grey field]	Data flow from WM8904 to bus master	

Table 84 Control Interface Terminology

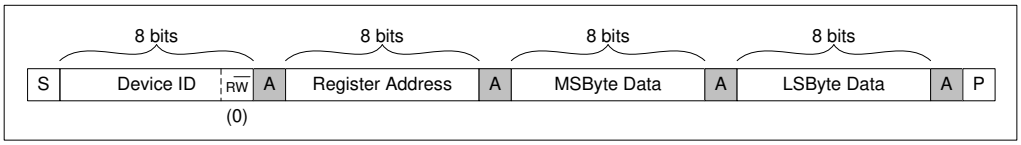

Figure 63 Single Register Write to Specified Address

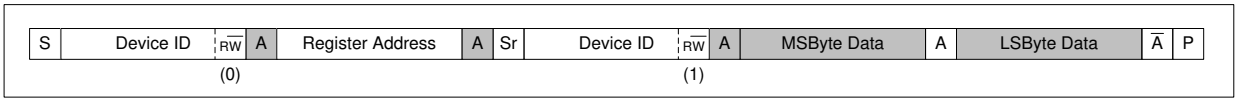

Figure 64 Single Register Read from Specified Address

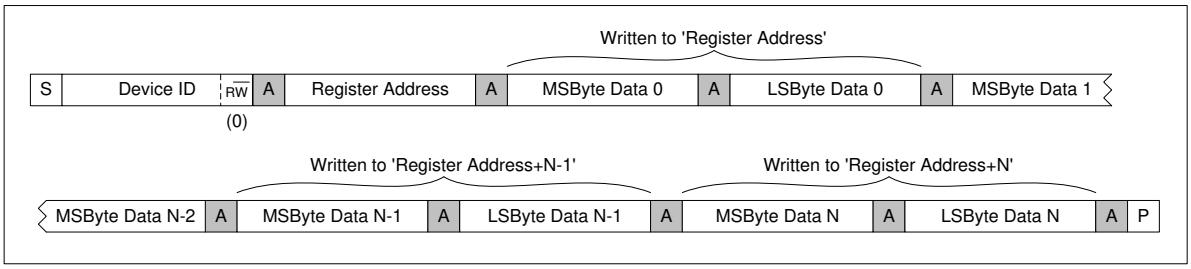

Figure 65 Multiple Register Write to Specified Address using Auto-increment

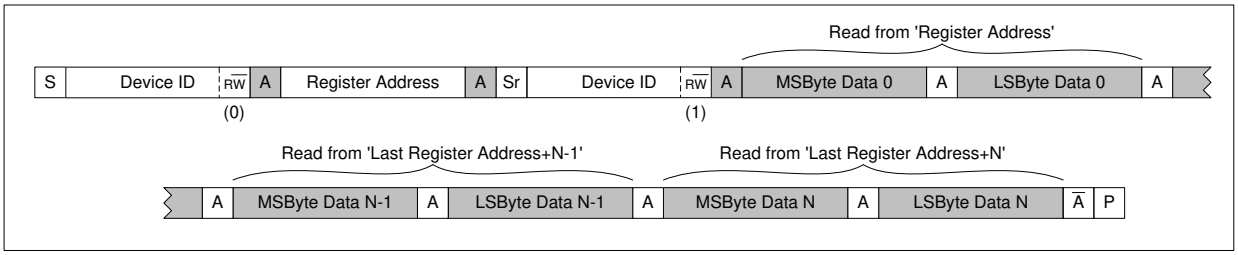

Figure 66 Multiple Register Read from Specified Address using Auto-increment

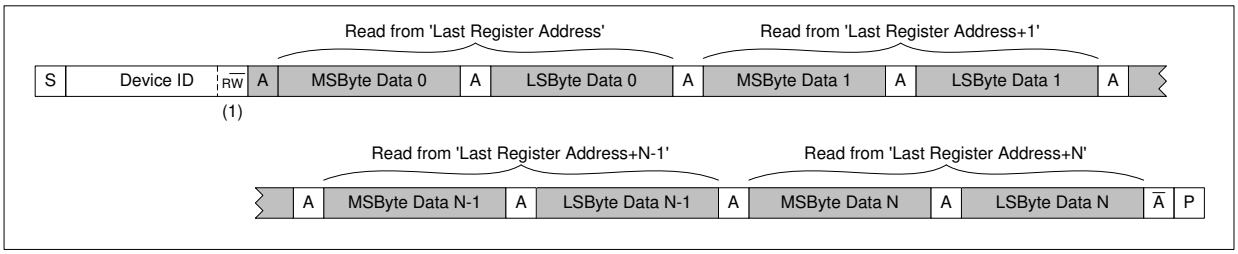

Figure 67 Multiple Register Read from Last Address using Auto-increment

CONTROL WRITE SEQUENCER

The Control Write Sequencer is a programmable unit that forms part of the WM8904 control interface logic. It provides the ability to perform a sequence of register write operations with the minimum of demands on the host processor - the sequence may be initiated by a single operation from the host processor and then left to execute independently.

Default sequences for Start-Up and Shutdown are provided (see “Default Sequences” section). It is recommended that these default sequences are used unless changes become necessary.

When a sequence is initiated, the sequencer performs a series of pre-defined register writes. The host processor informs the sequencer of the start index of the required sequence within the sequencer’s memory. At each step of the sequence, the contents of the selected register fields are read from the sequencer’s memory and copied into the WM8904 control registers. This continues sequentially through the sequencer’s memory until an “End of Sequence” bit is encountered; at this point, the sequencer stops and an Interrupt status flag is asserted. For cases where the timing of the write sequence is important, a programmable delay can be set for specific steps within the sequence.

Note that the Control Write Sequencer’s internal clock is derived from the internal clock SYSCLK. An external MCLK signal must be present when using the Control Write Sequencer, and SYSCLK must be enabled by setting CLK_SYS_ENA (see “Clocking and Sample Rates”). The clock division from MCLK is handled transparently by the WM8904 without user intervention, as long as MCLK and sample rates are set correctly.

INITIATING A SEQUENCE

The Register fields associated with running the Control Write Sequencer are described in Table 85.

The Write Sequencer Clock is enabled by setting the WSEQ_ENA bit. Note that the operation of the Control Write Sequencer also requires the internal clock SYSCLK to be enabled via the CLK_SYS_ENA (see “Clocking and Sample Rates”).

The start index of the required sequence must be written to the WSEQ_START_INDEX field. Setting the WSEQ_START bit initiates the sequencer at the given start index.

The Write Sequencer can be interrupted by writing a logic 1 to the WSEQ_ABORT bit.

The current status of the Write Sequencer can be read using two further register fields - when the WSEQ_BUSY bit is asserted, this indicates that the Write Sequencer is busy. Note that, whilst the Control Write Sequencer is running a sequence (indicated by the WSEQ_BUSY bit), normal read/write operations to the Control Registers cannot be supported. (The Write Sequencer registers and the Software Reset register can still be accessed when the Sequencer is busy.) The index of the current step in the Write Sequencer can be read from the WSEQ_CURRENT_INDEX field; this is an indicator of the sequencer's progress. On completion of a sequence, this field holds the index of the last step within the last commanded sequence.

When the Write Sequencer reaches the end of a sequence, it asserts the WSEQ_EINT flag in Register R127 (see Table 79 within the "Interrupts" section). This flag can be used to generate an Interrupt Event on completion of the sequence. Note that the WSEQ_EINT flag is asserted to indicate that the WSEQ is NOT Busy.

REGISTER ADDRESS	BIT	LABEL	DEFAULT	DESCRIPTION
R108 (6Ch) Write Sequencer 0	8	WSEQ_ENA	0	Write Sequencer Enable. 0 = Disabled 1 = Enabled
R111 (6Fh) Write Sequencer 3	9	WSEQ_ABORT	0	Writing a 1 to this bit aborts the current sequence and returns control of the device back to the serial control interface.
	8	WSEQ_START	0	Writing a 1 to this bit starts the write sequencer at the memory location indicated by the WSEQ_START_INDEX field. The sequence continues until it reaches an "End of sequence" flag. At the end of the sequence, this bit will be reset by the Write Sequencer.
	5:0	WSEQ_START_ INDEX [5:0]	00_0000	Sequence Start Index. This is the memory location of the first command in the selected sequence. 0 to 31 = RAM addresses 32 to 48 = ROM addresses 49 to 63 = Reserved
R112 (70h) Write Sequencer 4	9:4	WSEQ_CURRE NT_INDEX [5:0]	00_0000	Sequence Current Index (read only): This is the location of the most recently accessed command in the write sequencer memory.
	0	WSEQ_BUSY	0	Sequencer Busy flag (read only): 0 = Sequencer idle 1 = Sequencer busy Note: it is not possible to write to control registers via the control interface while the Sequencer is Busy.

Table 85 Write Sequencer Control - Initiating a Sequence

PROGRAMMING A SEQUENCE

A sequence consists of write operations to data bits (or groups of bits) within the control registers. The register fields associated with programming the Control Write Sequencer are described in Table 86.

For each step of the sequence being programmed, the Sequencer Index must be written to the WSEQ_WRITE_INDEX field. The values 0 to 31 correspond to all the available RAM addresses within the Write Sequencer memory. (Note that memory addresses 32 to 48 also exist, but these are ROM addresses, which are not programmable.)

Having set the Index as described above, Register R109 must be written to (containing the Control Register Address, the Start Bit Position and the Field Width applicable to this step of the sequence).

Also, Register R110 must be written to (containing the Register Data, the End of Sequence flag and the Delay time required after this step is executed). After writing to these two registers, the next step in the sequence may be programmed by updating WSEQ_WRITE_INDEX and repeating the procedure.

WSEQ_ADDR is an 8-bit field containing the Control Register Address in which the data should be written.

WSEQ_DATA_START is a 4-bit field which identifies the LSB position within the selected Control Register to which the data should be written. Setting WSEQ_DATA_START = 0100 will cause 1-bit data to be written to bit 4. With this setting, 4-bit data would be written to bits 7:4 and so on.

WSEQ_DATA_WIDTH is a 3-bit field which identifies the width of the data block to be written. This enables selected portions of a Control Register to be updated without any concern for other bits within the same register, eliminating the need for read-modify-write procedures. Values of 0 to 7 correspond to data widths of 1 to 8 respectively. For example, setting WSEQ_DATA_WIDTH = 010 will cause a 3-bit data block to be written. Note that the maximum value of this field corresponds to an 8-bit data block; writing to register fields greater than 8 bits wide must be performed using two separate operations of the Control Write Sequencer.

WSEQ_DATA is an 8-bit field which contains the data to be written to the selected Control Register. The WSEQ_DATA_WIDTH field determines how many of these bits are written to the selected register; the most significant bits (above the number indicated by WSEQ_DATA_WIDTH) are ignored.

WSEQ_DELAY is a 4-bit field which controls the waiting time between the current step and the next step in the sequence. The total delay time per step (including execution) is given by:

$$T = k \times (2^{WSEQ_DELAY} + 8)$$

where k = 62.5µs (under recommended operating conditions)

This gives a useful range of execution/delay times from 562µs up to 2.048s per step.

WSEQ_EOS is a 1-bit field which indicates the End of Sequence. If this bit is set, then the Control Write Sequencer will automatically stop after this step has been executed.

REGISTER ADDRESS	BIT	LABEL	DEFAULT	DESCRIPTION
R108 (6Ch) Write Sequencer 0	4:0	WSEQ_WRITE_INDEX [4:0]	0_0000	Sequence Write Index. This is the memory location to which any updates to R109 and R110 will be copied. 0 to 31 = RAM addresses
R109 (6Dh) Write Sequencer 1	14:12	WSEQ_DATA_WIDTH [2:0]	000	Width of the data block written in this sequence step. 000 = 1 bit 001 = 2 bits 010 = 3 bits 011 = 4 bits 100 = 5 bits 101 = 6 bits 110 = 7 bits 111 = 8 bits
	11:8	WSEQ_DATA_START [3:0]	0000	Bit position of the LSB of the data block written in this sequence step. 0000 = Bit 0 … 1111 = Bit 15
	7:0	WSEQ_ADDR [7:0]	0000_0000	Control Register Address to be written to in this sequence step.

REGISTER ADDRESS	BIT	LABEL	DEFAULT	DESCRIPTION
R110 (6Eh) Write Sequencer 2	14	WSEQ_EOS	0	End of Sequence flag. This bit indicates whether the Control Write Sequencer should stop after executing this step. 0 = Not end of sequence 1 = End of sequence (Stop the sequencer after this step).
	11:8	WSEQ_DELAY [3:0]	0000	Time delay after executing this step. Total delay time per step (including execution)= 62.5µs × (2^WSEQ_DELAY + 8)
	7:0	WSEQ_DATA [7:0]	0000_0000	Data to be written in this sequence step. When the data width is less than 8 bits, then one or more of the MSBs of WSEQ_DATA are ignored. It is recommended that unused bits be set to 0.

Table 86 Write Sequencer Control - Programming a Sequence

Note that a 'Dummy' write can be inserted into a control sequence by commanding the sequencer to write a value of 0 to bit 0 of Register R255 (FFh). This is effectively a write to a non-existent register location. This can be used in order to create placeholders ready for easy adaptation of the sequence. For example, a sequence could be defined to power-up a mono signal path from DACL to headphone, with a 'dummy' write included to leave space for easy modification to a stereo signal path configuration. Dummy writes can also be used in order to implement additional time delays between register writes. Dummy writes are included in the default start-up sequence – see Table 88.

In summary, the Control Register to be written is set by the WSEQ_ADDR field. The data bits that are written are determined by a combination of WSEQ_DATA_START, WSEQ_DATA_WIDTH and WSEQ_DATA. This is illustrated below for an example case of writing to the VMID_RES field within Register R5 (05h).

In this example, the Start Position is bit 01 (WSEQ_DATA_START = 0001b) and the Data width is 2 bits (WSEQ_DATA_WIDTH = 0001b). With these settings, the Control Write Sequencer would updated the Control Register R5 [2:1] with the contents of WSEQ_DATA [1:0].

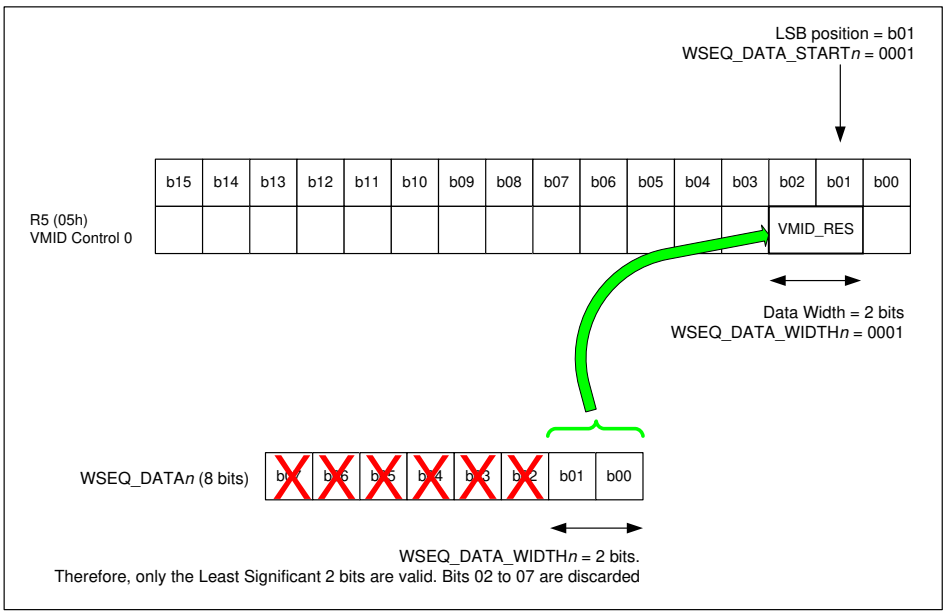

Figure 68 Control Write Sequencer Example

DEFAULT SEQUENCES

When the WM8904 is powered up, two Control Write Sequences are available through default settings in both RAM and ROM memory locations. The purpose of these sequences, and the register write required to initiate them, is summarised in Table 87. In both cases, a single register write will initiate the sequence.

WSEQ START INDEX	WSEQ FINISH INDEX	PURPOSE	TO INITIATE
0 (00h)	22 (16h)	Start-Up sequence	Write 0100h to Register R111 (6Fh)
25 (19h)	39 (27h)	Shutdown sequence	Write 0119h to Register R111 (6Fh)

Table 87 Write Sequencer Default Sequences

Note on Shutdown sequence: The instruction at Index Address 25 (19h) shorts the outputs LINEOUTL and LINEOUTR. If the Line outputs are not in use at the time the sequence is run, then the sequence could, instead, be started at Index Address 26.

Index addresses 0 to 31 may be programmed to users' own settings at any time, as described in "Programming a Sequence". Users' own settings remain in memory and are not affected by software resets (i.e. writing to Register R0). However, any non-default sequences are lost when the device is powered down.

START-UP SEQUENCE

The Start-up sequence is initiated by writing 0100h to Register R111 (6Fh). This single operation starts the Control Write Sequencer at Index Address 0 (00h) and executes the sequence defined in Table 88.

For typical clocking configurations with MCLK=12.288MHz, this sequence takes approximately 300ms to run.

Note that, for fast startup, step 18 may be overwritten with dummy data in order to achieve startup within 50ms (see "Quick Start-Up and Shutdown").

WSEQ INDEX	REGISTER ADDRESS	WIDTH	START	DATA	DELAY	EOS	DESCRIPTION
0 (00h)	R4 (04h)	5 bits	Bit 0	1Ah	0h	0b	ISEL = 10b BIAS_ENA = 0 (delay = 0.5625ms)
1 (01h)	R5 (05h)	8 bits	Bit 0	47h	6h	0b	VMID_BUF_ENA = 1 VMID_RES[1:0] = 11b VMID_ENA = 1 (delay = 4.5ms)
2 (02h)	R5 (05h)	2 bits	Bit 1	01h	0h	0b	VMID_RES[1:0] = 01b (delay = 0.5625ms)
3 (03h)	R4 (04h)	1 bit	Bit 0	01h	0h	0b	BIAS_ENA = 1 (delay = 0.5625ms)
4 (04h)	R14 (0Eh)	2 bits	Bit 0	03h	0h	0b	HPL_PGA_ENA = 1 HPR_PGA_ENA = 1 (delay = 0.5625ms)
5 (05h)	R15 (0Fh)	2 bits	Bit 0	03h	0h	0b	LINEOUTL_PGA_ENA = 1 LINEOUTR_PGA_ENA = 1 (delay = 0.5625ms)
6 (06h)	R22 (16h)	1 bit	Bit 1	01h	0h	0b	CLK_DSP_ENA = 1 (delay = 0.5625ms)

WSEQ INDEX	REGISTER ADDRESS	WIDTH	START	DATA	DELAY	EOS	DESCRIPTION
7 (07h)	R18 (12h)	2 bits	Bit 2	03h	5h	0b	DACL_ENA = 1 DACR_ENA = 1 (delay = 2.5ms)
8 (08h)	R255 (FFh)	1 bit	Bit 0	00h	0h	0b	Dummy Write for expansion (delay = 0.5625ms)
9 (09h)	R4 (04h)	1 bit	Bit 4	00h	0h	0b	(delay = 0.5625ms)
10 (0Ah)	R98 (62h)	1 bit	Bit 0	01h	6h	0b	CP_ENA = 1 (delay = 4.5ms)
11 (0Bh)	R255 (FFh)	1 bit	Bit 0	00h	0h	0b	Dummy Write for expansion (delay = 0.5625ms)
12 (0Ch)	R90 (5Ah)	8 bits	Bit 0	11h	0h	0b	HPL_ENA = 1 HPR_ENA = 1 (delay = 0.5625ms)
13 (0Dh)	R94 (5Eh)	8 bits	Bit 0	11h	0h	0b	LINEOUTL_ENA = 1 LINEOUTR_ENA = 1 (delay = 0.5625ms)
14 (0Eh)	R90 (5Ah)	8 bits	Bit 0	33h	0h	0b	HPL_ENA_DLY = 1 HPR_ENA_DLY = 1 (delay = 0.5625ms)
15 (0Fh)	R94 (5Eh)	8 bits	Bit 0	33h	0h	0b	LINEOUTL_ENA_DLY = 1 LINEOUTR_ENA_DLY = 1 (delay = 0.5625ms)
16 (10h)	R67 (43h)	4 bits	Bit 0	0Fh	Ch	0b	DCS_ENA_CHAN_0 = 1 DCS_ENA_CHAN_1 = 1 DCS_ENA_CHAN_2 = 1 DCS_ENA_CHAN_3 = 1 (delay = 0.5625ms)
17 (11h)	R68 (44h)	8 bits	Bit 0	F0h	0h	0b	DCS_TRIG_STARTUP_0 = 1 DCS_TRIG_STARTUP_1 = 1 DCS_TRIG_STARTUP_2 = 1 DCS_TRIG_STARTUP_3 = 1 (delay = 256.5ms)
18 (12h)	R255 (FFh)	1 bit	Bit 0	00h	0h	0b	Dummy Write for expansion (delay = 0.5625ms)
19 (13h)	R90 (5Ah)	8 bits	Bit 0	77h	0h	0b	HPL_ENA_OUTP = 1 HPR_ENA_OUTP = 1 (delay = 0.5625ms)
20 (14h)	R94 (5Eh)	8 bits	Bit 0	77h	0h	0b	LINEOUTL_ENA_OUTP = 1 LINEOUTR_ENA_OUTP = 1 (delay = 0.5625ms)
21 (15h)	R90 (5Ah)	8 bits	Bit 0	FFh	0h	0b	HPL_RMV_SHORT = 1 HPR_RMV_SHORT = 1 (delay = 0.5625ms)
22 (16h)	R94 (5Eh)	8 bits	Bit 0	FFh	0h	1b	LINEOUTL_RMV_SHORT = 1 LINEOUTR_RMV_SHORT = 1 End of Sequence
23 (17h)	R255 (FFh)	1 bit	Bit 0	00h	0h	0b	Spare
24 (18h)	R255 (FFh)	1 bit	Bit 0	00h	0h	0b	Spare

Table 88 Start-up Sequence

SHUTDOWN SEQUENCE

The Shutdown sequence is initiated by writing 0119h to Register R111 (6Fh). This single operation starts the Control Write Sequencer at Index Address 25 (19h) and executes the sequence defined in Table 89.

For typical clocking configurations with MCLK=12.288MHz, this sequence takes approximately 350ms.

WSEQ INDEX	REGISTER ADDRESS	WIDTH	START	DATA	DELAY	EOS	DESCRIPTION
25 (19h)	R94 (5Eh)	8 bits	Bit 0	77h	0h	0b	LINEOUTL_RMV_SHORT = 0 LINEOUTR_RMV_SHORT = 0 (delay = 0.5625ms)
26 (1Ah)	R90 (5Ah)	8 bits	Bit 0	77h	0h	0b	HPL_RMV_SHORT = 0 HPR_RMV_SHORT = 0 (delay = 0.5625ms)
27 (1Bh)	R90 (5Ah)	8 bits	Bit 0	00h	0h	0b	HPL_ENA_OUTP = 0 HPL_ENA_DLY = 0 HPL_ENA = 0 HPR_ENA_OUTP = 0 HPR_ENA_DLY = 0 HPR_ENA = 0 (delay = 0.5625ms)
28 (1Ch)	R94 (5Eh)	8 bits	Bit 0	00h	0h	0b	LINEOUTL_ENA_OUTP = 0 LINEOUTL_ENA_DLY = 0 LINEOUTL_ENA = 0 LINEOUTR_ENA_OUTP = 0 LINEOUTR_ENA_DLY = 0 LINEOUTR_ENA = 0 (delay = 0.5625ms)
29 (1Dh)	R67 (43h)	4 bits	Bit 0	00h	0h	0b	DCS_ENA_CHAN_0 = 0 DCS_ENA_CHAN_1 = 0 DCS_ENA_CHAN_2 = 0 DCS_ENA_CHAN_3 = 0 (delay = 0.5625ms)
30 (1Eh)	R98 (62h)	1 bit	Bit 0	00h	0h	0b	CP_ENA = 0 (delay = 0.5625ms)
31 (1Fh)	R18 (12h)	2 bits	Bit 2	00h	0h	0b	DACL_ENA = 0 DACR_ENA = 0 (delay = 0.5625ms)
32 (20h)	R22 (16h)	1 bit	Bit 1	00h	0h	0b	CLK_DSP_ENA = 0 (delay = 0.5625ms)
33 (21h)	R14 (0Eh)	2 bits	Bit 0	00h	0h	0b	HPL_PGA_ENA = 0 HPR_PGA_ENA = 0 (delay = 0.5625ms)
34 (22h)	R15 (0Fh)	2 bits	Bit 0	00h	0h	0b	LINEOUTL_PGA_ENA = 0 LINEOUTR_PGA_ENA = 0 (delay = 0.5625ms)
35 (23h)	R4 (04h)	1 bit	Bit 0	00h	0h	0b	BIAS_ENA = 0 (delay = 0.5625ms)
36 (24h)	R5 (05h)	1 bit	Bit 0	00h	Ch	0b	VMID_ENA = 0 (delay = 256.5ms)
37 (25h)	R5 (05h)	1 bit	Bit 0	00h	9h	0b	VMID_ENA = 0 (delay = 32.5ms)
38 (26h)	R5 (05h)	8 bits	Bit 0	00h	0h	0b	VMID_BUF_ENA = 0 VMID_RES[1:0] = 00 VMID_ENA = 0

WSEQ INDEX	REGISTER ADDRESS	WIDTH	START	DATA	DELAY	EOS	DESCRIPTION
							(delay = 0.5625ms)
39 (27h)	R4 (04h)	2 bits	Bit 0	00h	0h	1b	BIAS_ENA = 0 End of Sequence

Table 89 Shutdown Sequence

POWER-ON RESET

The WM8904 includes an internal Power-On-Reset (POR) circuit, which is used to reset the digital logic into a default state after power up. The POR circuit is powered from AVDD and monitors DCVDD. The internal $\overline{POR}$ signal is asserted low when AVDD or DCVDD are below minimum thresholds.

The specific behaviour of the circuit will vary, depending on the relative timing of the supply voltages. Typical scenarios are illustrated in Figure 69 and Figure 70.

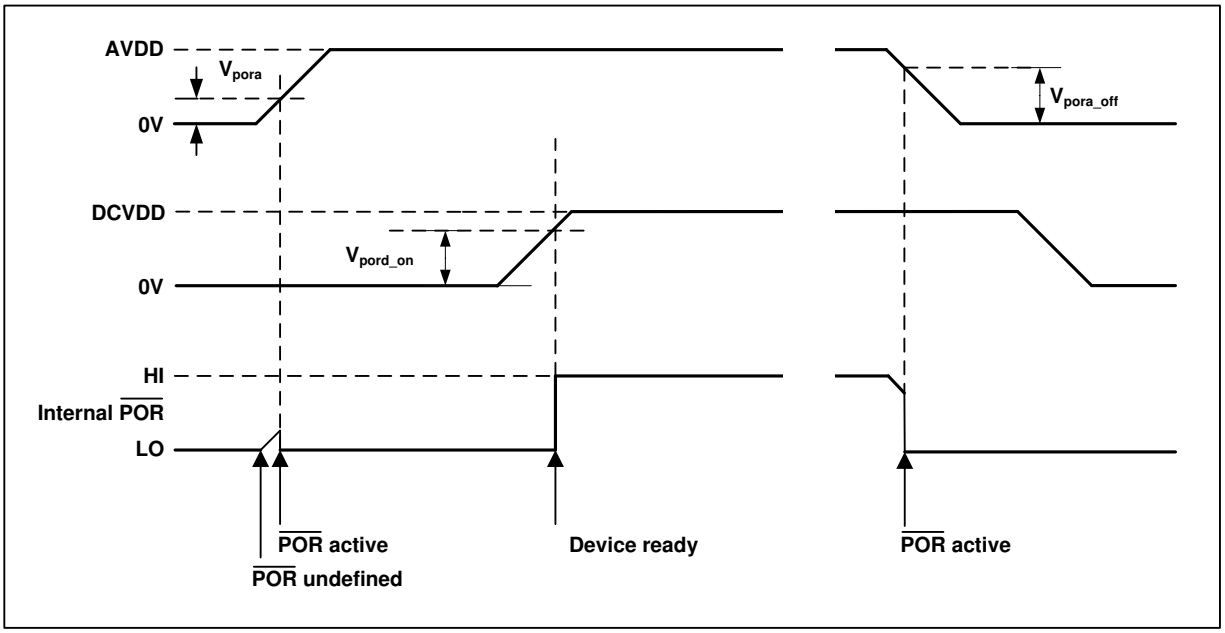

Figure 69 Power On Reset timing - AVDD enabled first

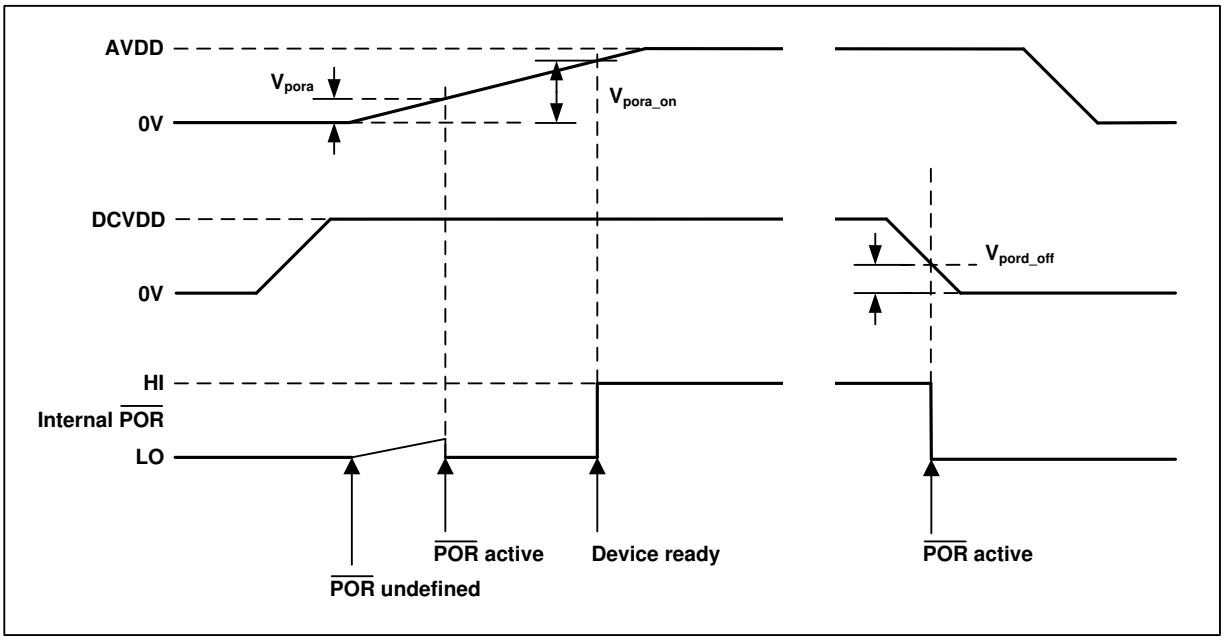

Figure 70 Power On Reset timing - DCVDD enabled first

The $\overline{POR}$ signal is undefined until AVDD has exceeded the minimum threshold, V_{pora} Once this threshold has been exceeded, $\overline{POR}$ is asserted low and the chip is held in reset. In this condition, all writes to the control interface are ignored. Once AVDD and DCVDD have reached their respective power on thresholds, $\overline{POR}$ is released high, all registers are in their default state, and writes to the control interface may take place.

Note that a minimum power-on reset period, T_{POR}, applies even if AVDD and DCVDD have zero rise time. (This specification is guaranteed by design rather than test.)

On power down, $\overline{POR}$ is asserted low when any of AVDD or DCVDD falls below their respective power-down thresholds.

Typical Power-On Reset parameters for the WM8904 are defined in Table 90.

SYMBOL	DESCRIPTION	TYP	UNIT
V_{pora}	AVDD threshold below which POR is undefined	0.25	V
V_{pora_on}	Power-On threshold (AVDD)	1.15	V
V_{pora_off}	Power-Off threshold (AVDD)	1.12	V
V_{pord_on}	Power-On threshold (DCVDD)	0.57	V
V_{pord_off}	Power-Off threshold (DCVDD)	0.55	V
T_{POR}	Minimum Power-On Reset period	9.5	µs

Table 90 Typical Power-On Reset parameters

Notes:

1. If AVDD and DCVDD suffer a brown-out (i.e. drop below the minimum recommended operating level but do not go below V_{pora_off} or V_{pord_off}) then the chip does not reset and resumes normal operation when the voltage is back to the recommended level again.

2. The chip enters reset at power down when AVDD or DCVDD falls below V_{pora_off} or V_{pord_off}. This may be important if the supply is turned on and off frequently by a power management system.

3. The minimum T_{por} period is maintained even if DCVDD and AVDD have zero rise time. This specification is guaranteed by design rather than test.

QUICK START-UP AND SHUTDOWN

The WM8904 has the capability to perform a quick start-up and shutdown with a minimum number of register operations. This is achieved using the Control Write Sequencer, which is configured with default start-up settings that set up the device for DAC playback via Headphone and Line output. Assuming a 12.288MHz external clock, the start-up sequence configures the device for 48kHz playback mode.

The default start-up sequence requires three register write operations. The default shutdown sequence requires just a single register write. The minimum procedure for executing the quick start-up and shutdown sequences is described below. See "Control Write Sequencer" for more details.

After the default start-up sequence has been performed, the DC offset correction values will be held in memory, provided that power is maintained and a software reset is not performed. Fast start-up using the stored values of DC offset correction is also possible, as described below.

QUICK START-UP (DEFAULT SEQUENCE)

An external clock must be applied to MCLK. Assuming 12.288MHz input clock, the start-up sequence will take approximately 300ms to complete.

The following register operations will initiate the quick start-up sequence.

REGISTER ADDRESS	VALUE	DESCRIPTION
R108 (6Ch) Write Sequencer 0	0100h	WSEQ_ENA = 1 WSEQ_WRITE_INDEX = 00h This enables the Write Sequencer
R111 (6Fh) Write Sequencer 3	0100h	WSEQ_ABORT = 0 WSEQ_START = 1 WSEQ_START_INDEX = 00h This starts the Write Sequencer at Index address 0 (00h)
R33 (21h) DAC Digital 1	0000h	DAC_MONO = 0 DAC_SB_FILT = 0 DAC_MUTERATE = 0 DAC_UNMUTE_RAMP = 0 DAC_OSR128 = 0 DAC_MUTE = 0 DEEMPH = 00 This un-mutes the DACs

Table 91 Quick Start-up Control

The WSEQ_BUSY bit (in Register R112, see Table 85) will be set to 1 while the sequence runs. When this bit returns to 0, the device has been set up and is ready for DAC playback operation.

FAST START-UP FROM STANDBY

The default start-up sequence runs the DC Servo to remove DC offsets from the outputs. The offset for this path selection is then stored in memory. Provided that power is maintained to the chip, and a software reset is not performed, then the DC offset correction will be held in memory on the WM8904. This allows the DC Servo calibrations to be omitted from the start-up sequence if the offset correction has already been performed. By omitting this part of the start-up sequence, a fast start-up time of less than 50ms can be achieved.

The register write sequence described in Table 92 replaces the default DC Servo operation with dummy operations, allowing a fast start-up to be achieved, assuming the device is initially in a standby condition with DC offset correction previously performed.

Note that, if power is removed from the WM8904 or if a software reset is performed, then the default sequence will be restored, and the DC offset correction will be necessary on the output paths once more.

REGISTER ADDRESS	VALUE	DESCRIPTION
R108 (6Ch) Write Sequencer 0	0111h	WSEQ_ENA = 1 WSEQ_WRITE_INDEX = 11h This enables the Write Sequencer and selects WSEQ Index 17 (11h) for modification
R109 (6Dh) Write Sequencer 1	00FFh	WSEQ_DATA_WIDTH = 000 WSEQ_DATA_START = 0000 WSEQ_ADDR = FFh This modifies WSEQ Index 17 (11h) with Dummy step
R110 (6Eh) Write Sequencer 2	0000h	WSEQ_EOS = 0 WSEQ_DELAY = 0000 WSEQ_DATA = 00h This modifies WSEQ Index 17 (11h) with Dummy step
R111 (6Fh) Write Sequencer 3	0100h	WSEQ_ABORT = 0 WSEQ_START = 1 WSEQ_START_INDEX = 00h This starts the Write Sequencer at Index address 0 (00h)
R33 (21h) DAC Digital 1	0000h	DAC_MONO = 0 DAC_SB_FILT = 0 DAC_MUTERATE = 0 DAC_UNMUTE_RAMP = 0 DAC_OSR128 = 0 DAC_MUTE = 0 DEEMPH = 00 This un-mutes the DACs

Table 92 Fast Start-up from Standby Control

The WSEQ_BUSY bit (in Register R112, see Table 85) will be set to 1 while the sequence runs. When this bit returns to 0, the device has been set up and is ready for DAC playback operation.

QUICK SHUTDOWN (DEFAULT SEQUENCE)

The default shutdown sequence assumes the initial device conditions are as configured by the default start-up sequence. Assuming 12.288MHz input clock, the shutdown sequence will take approximately 350ms to complete.

The following register operation will initiate the default shutdown sequence.

REGISTER ADDRESS	VALUE	DESCRIPTION
R111 (6Fh) Write Sequencer 3	0119h	WSEQ_ABORT = 0 WSEQ_START = 1 WSEQ_START_INDEX = 19h This starts the Write Sequencer at Index address 25 (19h)

Table 93 Quick Shutdown Control

The WSEQ_BUSY bit (in Register R112, see Table 85) will be set to 1 while the sequence runs. When this bit returns to 0, the system clock can be disabled (CLK_SYS_ENA=0) and MCLK can be stopped.

SOFTWARE RESET AND CHIP ID

A Software Reset can be commanded by writing to Register R0. This is a read-only register field and the contents will not be affected by writing to this Register.

The Chip ID can be read back from Register R0.

REGISTER ADDRESS	BIT	LABEL	DEFAULT	DESCRIPTION
R0 (00h) SW Reset and ID	15:0	SW_RST_DEV_ID1 [15:0]	8904h	Writing to this register resets all registers to their default state. Reading from this register will indicate Device ID 8904h.

Table 94 Software Reset and Chip ID

REGISTER MAP

Dec Addr	Hex Addr	Name	15	14	13	12	11	10	9	8	7	6	5	4	3	2	1	0	Bin Default
0	00	SW Reset and ID	SW_RST_DEV_ID[15:0]																1000_1001_0000_0100
4	04	Bias Control 0	0	0	0	0	0	0	0	0	0	0	0	1	ISEL[1:0]		0	BIAS_ENA	0000_0000_0001_1000
5	05	VMID Control 0	0	0	0	0	0	0	0	0	0	VMID_BUF_ENA	0	0	0	VMID_RES[1:0]		VMID_ENA	0000_0000_0000_0000
6	06	Mic Bias Control 0	0	0	0	0	0	0	0	0	0	MICDET_THR[2:0]			MICSHORT_THR[1:0]		MICDET_ENA	MICBIAS_ENA	0000_0000_0000_0000
7	07	Mic Bias Control 1	0	0	0	0	0	0	0	0	0	0	0	0	0	MICBIAS_SEL[2:0]			0000_0000_0000_0000
10	0A	Analogue ADC 0	0	0	0	0	0	0	0	0	0	0	0	0	0	0	0	ADC_OSR128	0000_0000_0000_0001
12	0C	Power Management 0	0	0	0	0	0	0	0	0	0	0	0	0	0	0	INL_ENA	INR_ENA	0000_0000_0000_0000
14	0E	Power Management 2	0	0	0	0	0	0	0	0	0	0	0	0	0	0	HPL_PGA_ENA	HPR_PGA_ENA	0000_0000_0000_0000
15	0F	Power Management 3	0	0	0	0	0	0	0	0	0	0	0	0	0	0	LINEOUTL_PGA_ENA	LINEOUTR_PGA_ENA	0000_0000_0000_0000
18	12	Power Management 6	0	0	0	0	0	0	0	0	0	0	0	0	DACL_ENA	DACR_ENA	ADCL_ENA	ADCR_ENA	0000_0000_0000_0000
20	14	Clock Rates 0	1	TOCLK_RATE_DIV16	TOCLK_RATE_X4	0	1	1	0	0	0	1	0	1	1	1	1	MCLK_DIV	1000_1100_0101_1110
21	15	Clock Rates 1	0	0	CLK_SYS_RATE[3:0]				0	0	0	0	0	0	0	SAMPLE_RATE[2:0]			0000_1100_0000_0101
22	16	Clock Rates 2	MCLK_INV	SYSCLK_SRC	0	TOCLK_RATE	0	0	0	0	0	0	0	0	OPCLK_ENA	CLK_SYS_ENA	CLK_DSP_ENA	TOCLK_ENA	0000_0000_0000_0000
24	18	Audio Interface 0	0	0	0	DACL_DATINV	DACR_DATINV	DAC_BOOST[1:0]		LOOPBACK	AIFADCL_SRC	AIFADCR_SRC	AIFDACL_SRC	AIFDACR_SRC	ADC_COMP	ADC_COMPMODE	DAC_COMP	DAC_COMPMODE	0000_0000_0101_0000
25	19	Audio Interface 1	0	0	AIFDAC_TDM	AIFDAC_TDM_CHAN	AIFADC_TDM	AIFADC_TDM_CHAN	0	AIF_TRIS	AIF_BCLK_INV	BCLK_DIR	0	AIF_LRCLK_INV	AIF_WL[1:0]		AIF_FMT[1:0]		0000_0000_0000_1010
26	1A	Audio Interface 2	0	0	0	0	OPCLK_DIV[3:0]				1	1	1	BCLK_DIV[4:0]					0000_0000_1110_0100
27	1B	Audio Interface 3	0	0	0	0	LRCLK_DIR	LRCLK_RATE[10:0]											0000_0000_0100_0000
30	1E	DAC Digital Volume Left	0	0	0	0	0	0	0	DAC_VU	DACL_VOL[7:0]								0000_000P_1100_0000
31	1F	DAC Digital Volume Right	0	0	0	0	0	0	0	DAC_VU	DACR_VOL[7:0]								0000_000P_1100_0000
32	20	DAC Digital 0	0	0	0	0	ADCL_DAC_SVOL[3:0]				ADCR_DAC_SVOL[3:0]				ADC_TO_DACL[1:0]		ADC_TO_DACR[1:0]		0000_0000_0000_0000
33	21	DAC Digital 1	0	0	0	DAC_MONO	DAC_SB_FILT	DAC_MUTERATE	DAC_UNMUTE_RAMP		0	DAC_OSR128	0	0	DAC_MUTE	DEEMPH[1:0]		0	0000_0000_0000_1000
36	24	ADC Digital Volume Left	0	0	0	0	0	0	0	ADC_VU	ADCL_VOL[7:0]								0000_000P_1100_0000
37	25	ADC Digital Volume Right	0	0	0	0	0	0	0	ADC_VU	ADCR_VOL[7:0]								0000_000P_1100_0000
38	26	ADC Digital 0	0	0	0	0	0	0	0	0	0	ADC_HPF_CUT[1:0]		ADC_HPF	0	0	ADCL_DATINV	ADCR_DATINV	0000_0000_0001_0000
39	27	Digital Microphone 0	0	0	0	DMIC_ENA	DMIC_SRC	0	0	0	0	0	0	0	0	0	0	0	0000_0000_0000_0000
40	28	DRC 0	DRC_ENA	DRC_DAC_PATH	0	DRC_GS_HYST_LVL[1:0]		DRC_STARTUP_GAIN[4:0]					DRC_FF_DELAY	0	DRC_GS_ENA	DRC_QR	DRC_ANTICLIP	DRC_GS_HYST	0000_0001_1010_1111
41	29	DRC 1	DRC_ATK[3:0]				DRC_DCY[3:0]				DRC_QR_THR[1:0]		DRC_QR_DCY[1:0]		DRC_MINGAIN[1:0]		DRC_MAXGAIN[1:0]		0011_0010_0100_1000
42	2A	DRC 2	0	0	0	0	0	0	0	0	0	0	DRC_HI_COMP[2:0]			DRC_LO_COMP[2:0]			0000_0000_0000_0000
43	2B	DRC 3	0	0	0	0	0	DRC_KNEE_IP[5:0]						DRC_KNEE_OP[4:0]					0000_0000_0000_0000

Dec Addr	Hex Addr	Name	15	14	13	12	11	10	9	8	7	6	5	4	3	2	1	0	Bin Default
44	2C	Analogue Left Input 0	0	0	0	0	0	0	0	0	LINMUTE	0	0	LIN_VOL[4:0]					0000_0000_1000_0101
45	2D	Analogue Right Input 0	0	0	0	0	0	0	0	0	RINMUTE	0	0	RIN_VOL[4:0]					0000_0000_1000_0101
46	2E	Analogue Left Input 1	0	0	0	0	0	0	0	0	0	INL_CM_ENA	L_IP_SEL_N[1:0]		L_IP_SEL_P[1:0]		L_MODE[1:0]		0000_0000_0100_0100
47	2F	Analogue Right Input 1	0	0	0	0	0	0	0	0	0	INR_CM_ENA	R_IP_SEL_N[1:0]		R_IP_SEL_P[1:0]		R_MODE[1:0]		0000_0000_0100_0100
57	39	Analogue OUT1 Left	0	0	0	0	0	0	0	HPOUTL_MUTE	HPOUT_VU	HPOUTLZC	HPOUTL_VOL[5:0]						0000_0000_P010_1101
58	3A	Analogue OUT1 Right	0	0	0	0	0	0	0	HPOUTR_MUTE	HPOUT_VU	HPOUTRZC	HPOUTR_VOL[5:0]						0000_0000_P010_1101
59	3B	Analogue OUT2 Left	0	0	0	0	0	0	0	LINEOUTL_MUTE	LINEOUT_VU	LINEOUTLZC	LINEOUTL_VOL[5:0]						0000_0000_P011_1001
60	3C	Analogue OUT2 Right	0	0	0	0	0	0	0	LINEOUTR_MUTE	LINEOUT_VU	LINEOUTRZC	LINEOUTR_VOL[5:0]						0000_0000_P011_1001
61	3D	Analogue OUT1 2 ZC	0	0	0	0	0	0	0	0	0	0	0	0	HPL_BYP_ENA	HPR_BYP_ENA	LINEOUTL_BYP_ENA	LINEOUTR_BYP_ENA	0000_0000_0000_0000
67	43	DC Servo 0	0	0	0	0	0	0	0	0	0	0	0	0	DCS_ENA_CHAN_3	DCS_ENA_CHAN_2	DCS_ENA_CHAN_1	DCS_ENA_CHAN_0	0000_0000_0000_0000
68	44	DC Servo 1	DCS_TRIG_SINGLE_3	DCS_TRIG_SINGLE_2	DCS_TRIG_SINGLE_1	DCS_TRIG_SINGLE_0	DCS_TRIG_SERIES_3	DCS_TRIG_SERIES_2	DCS_TRIG_SERIES_1	DCS_TRIG_SERIES_0	DCS_TRIG_STARTUP_3	DCS_TRIG_STARTUP_2	DCS_TRIG_STARTUP_1	DCS_TRIG_STARTUP_0	DCS_TRIG_DAC_WR_3	DCS_TRIG_DAC_WR_2	DCS_TRIG_DAC_WR_1	DCS_TRIG_DAC_WR_0	PPPP_PPPP_PPPP_PPPP
69	45	DC Servo 2	0	0	0	0	DCS_TIMER_PERIOD_23[3:0]				0	0	0	0	DCS_TIMER_PERIOD_01[3:0]				1010_1010_1010_1010
71	47	DC Servo 4	0	0	0	0	0	0	0	0	0	DCS_SERIES_NO_23[6:0]							1010_1010_1010_1010
72	48	DC Servo 5	0	0	0	0	0	0	0	0	0	DCS_SERIES_NO_01[6:0]							1010_1010_1010_1010
73	49	DC Servo 6	0	0	0	0	0	0	0	0	DCS_DAC_WR_VAL_3[7:0]								0000_0000_0000_0000
74	4A	DC Servo 7	0	0	0	0	0	0	0	0	DCS_DAC_WR_VAL_2[7:0]								0000_0000_0000_0000
75	4B	DC Servo 8	0	0	0	0	0	0	0	0	DCS_DAC_WR_VAL_1[7:0]								0000_0000_0000_0000
76	4C	DC Servo 9	0	0	0	0	0	0	0	0	DCS_DAC_WR_VAL_0[7:0]								0000_0000_0000_0000
77	4D	DC Servo Readback 0	0	0	0	0	DCS_CAL_COMPLETE[3:0]				DCS_DAC_WR_COMPLETE[3:0]				DCS_STARTUP_COMPLETE[3:0]				0000_0000_0000_0000
90	5A	Analogue HP 0	0	0	0	0	0	0	0	0	HPL_RMV_SHORT	HPL_ENA_OUTP	HPL_ENA_DLY	HPL_ENA	HPR_RMV_SHORT	HPR_ENA_OUTP	HPR_ENA_DLY	HPR_ENA	0000_0000_0000_0000
94	5E	Analogue Lineout 0	0	0	0	0	0	0	0	0	LINEOUTL_RMV_SHORT	LINEOUTL_ENA_OUTP	LINEOUTL_ENA_DLY	LINEOUTL_ENA	LINEOUTR_RMV_SHORT	LINEOUTR_ENA_OUTP	LINEOUTR_ENA_DLY	LINEOUTR_ENA	0000_0000_0000_0000
98	62	Charge Pump 0	0	0	0	0	0	0	0	0	0	0	0	0	0	0	0	CP_ENA	0000_0000_0000_0000
104	68	Class W 0	0	0	0	0	0	0	0	0	0	0	0	0	0	0	0	CP_DYN_PWR	0000_0000_0000_0100
108	6C	Write Sequencer 0	0	0	0	0	0	0	0	WSEQ_ENA	0	0	0	WSEQ_WRITE_INDEX[4:0]					0000_0000_0000_0000
109	6D	Write Sequencer 1	0	WSEQ_DATA_WIDTH[2:0]			WSEQ_DATA_START[3:0]				WSEQ_ADDR[7:0]								0000_0000_0000_0000
110	6E	Write Sequencer 2	0	WSEQ_EOS	0	0	WSEQ_DELAY[3:0]				WSEQ_DATA[7:0]								0000_0000_0000_0000
111	6F	Write Sequencer 3	0	0	0	0	0	0	WSEQ_ABORT	WSEQ_START	0	0	WSEQ_START_INDEX[5:0]						0000_0000_0000_0000
112	70	Write Sequencer 4	0	0	0	0	0	0	WSEQ_CURRENT_INDEX[5:0]						0	0	0	WSEQ_BUSY	0000_0000_0000_0000

Dec Addr	Hex Addr	Name	15	14	13	12	11	10	9	8	7	6	5	4	3	2	1	0	Bin Default
116	74	FLL Control 1	0	0	0	0	0	0	0	0	0	0	0	0	0	FLL_FRACN_ENA	FLL_OSC_ENA	FLL_ENA	0000_0000_0000_0000
117	75	FLL Control 2	0	0	FLL_OUTDIV[5:0]						0	FLL_CTRL_RATE[2:0]			0	FLL_FRATIO[2:0]			0000_0000_0000_0111
118	76	FLL Control 3	FLL_K[15:0]																0000_0000_0000_0000
119	77	FLL Control 4	0	FLL_N[9:0]										0	FLL_GAIN[3:0]				0010_1110_1110_0000
120	78	FLL Control 5	0	0	0	0	0	0	0	0	0	0	0	FLL_CLK_REF_DIV[1:0]		1	FLL_CLK_REF_SRC[1:0]		0000_0000_0000_0100
121	79	GPIO Control 1	0	0	0	0	0	0	0	0	0	0	GPIO1_PU	GPIO1_PD	GPIO1_SEL[3:0]				0000_0000_0001_0100
122	7A	GPIO Control 2	0	0	0	0	0	0	0	0	0	0	GPIO2_PU	GPIO2_PD	GPIO2_SEL[3:0]				0000_0000_0001_0000
123	7B	GPIO Control 3	0	0	0	0	0	0	0	0	0	0	GPIO3_PU	GPIO3_PD	GPIO3_SEL[3:0]				0000_0000_0001_0000
124	7C	GPIO Control 4	0	0	0	0	0	0	GPI7_ENA	GPI8_ENA	GPIO_BCLK_MODE_ENA	0	0	0	GPIO_BCLK_SEL[3:0]				0000_0000_0000_0000
126	7E	Digital Pulls	0	0	0	0	0	0	0	0	MCLK_PU	MCLK_PD	DACDAT_PU	DACDAT_PD	LRCLK_PU	LRCLK_PD	BCLK_PU	BCLK_PD	0000_0000_0000_0000
127	7F	Interrupt Status	0	0	0	0	0	IRQ	GPIO_BCLK_EINT	WSEQ_EINT	GPIO3_EINT	GPIO2_EINT	GPIO1_EINT	GPI8_EINT	GPI7_EINT	FLL_LOCK_EINT	MIC_SHRT_EINT	MIC_DET_EINT	XXXX_XPPP_PPPP_PPPP
128	80	Interrupt Status Mask	0	0	0	0	0	0	IM_GPIO_BCLK_EINT	IM_WSEQ_EINT	IM_GPIO3_EINT	IM_GPIO2_EINT	IM_GPIO1_EINT	IM_GPI8_EINT	IM_GPI7_EINT	IM_FLL_LOCK_EINT	IM_MIC_SHRT_EINT	IM_MIC_DET_EINT	1111_1111_1111_1111
129	81	Interrupt Polarity	0	0	0	0	0	0	GPIO_BCLK_EINT_POL	WSEQ_EINT_POL	GPIO3_EINT_POL	GPIO2_EINT_POL	GPIO1_EINT_POL	GPI8_EINT_POL	GPI7_EINT_POL	FLL_LOCK_EINT_POL	MIC_SHRT_EINT_POL	MIC_DET_EINT_POL	0000_0000_0000_0000
130	82	Interrupt Debounce	0	0	0	0	0	0	GPIO_BCLK_EINT_DB	WSEQ_EINT_DB	GPIO3_EINT_DB	GPIO2_EINT_DB	GPIO1_EINT_DB	GPI8_EINT_DB	GPI7_EINT_DB	FLL_LOCK_EINT_DB	MIC_SHRT_EINT_DB	MIC_DET_EINT_DB	0000_0000_0000_0000
134	86	EQ1	0	0	0	0	0	0	0	0	0	0	0	0	0	0	0	EQ_ENA	0000_0000_0000_0000
135	87	EQ2	0	0	0	0	0	0	0	0	0	0	0	EQ_B1_GAIN[4:0]					0000_0000_0000_1100
136	88	EQ3	0	0	0	0	0	0	0	0	0	0	0	EQ_B2_GAIN[4:0]					0000_0000_0000_1100
137	89	EQ4	0	0	0	0	0	0	0	0	0	0	0	EQ_B3_GAIN[4:0]					0000_0000_0000_1100
138	8A	EQ5	0	0	0	0	0	0	0	0	0	0	0	EQ_B4_GAIN[4:0]					0000_0000_0000_1100
139	8B	EQ6	0	0	0	0	0	0	0	0	0	0	0	EQ_B5_GAIN[4:0]					0000_0000_0000_1100
140	8C	EQ7	EQ_B1_A[15:0]																0000_1111_1100_1010
141	8D	EQ8	EQ_B1_B[15:0]																0000_0100_0000_0000
142	8E	EQ9	EQ_B1_PG[15:0]																0000_0000_1101_1000
143	8F	EQ10	EQ_B2_A[15:0]																0001_1110_1011_0101
144	90	EQ11	EQ_B2_B[15:0]																1111_0001_0100_0101
145	91	EQ12	EQ_B2_C[15:0]																0000_1011_0111_0101
146	92	EQ13	EQ_B2_PG[15:0]																0000_0001_1100_0101
147	93	EQ14	EQ_B3_A[15:0]																0001_1100_0101_1000
148	94	EQ15	EQ_B3_B[15:0]																1111_0011_0111_0011
149	95	EQ16	EQ_B3_C[15:0]																0000_1010_0101_0100
150	96	EQ17	EQ_B3_PG[15:0]																0000_0101_0101_1000
151	97	EQ18	EQ_B4_A[15:0]																0001_0110_1000_1110

Dec Addr	Hex Addr	Name	15	14	13	12	11	10	9	8	7	6	5	4	3	2	1	0	Bin Default
152	98	EQ19	EQ_B4_B[15:0]																1111_1000_0010_1001
153	99	EQ20	EQ_B4_C[15:0]																0000_0111_1010_1101
154	9A	EQ21	EQ_B4_PG[15:0]																0001_0001_0000_0011
155	9B	EQ22	EQ_B5_A[15:0]																0000_0101_0110_0100
156	9C	EQ23	EQ_B5_B[15:0]																0000_0101_0101_1001
157	9D	EQ24	EQ_B5_PG[15:0]																0100_0000_0000_0000
198	C6	ADC Test 0	0	0	0	0	0	0	0	0	0	0	0	0	0	ADC_128_OSR_TST_MODE	0	ADC_BIASX1P5	0000_0000_0000_0000
247	F7	FLL NCO Test 0	0	0	0	0	0	0	0	0	0	0	0	0	0	0	0	FLL_FRC_NCO	0000_0000_0000_0000
248	F8	FLL NCO Test 1	0	0	0	0	0	0	0	0	0	0	FLL_FRC_NCO_VAL[5:0]						0000_0000_0001_1001

REGISTER BITS BY ADDRESS

REGISTER ADDRESS	BIT	LABEL	DEFAULT	DESCRIPTION	REFER TO
R0 (00h) SW Reset and ID	15:0	SW_RST_DEV_ID1 [15:0]	1000_1001_0000_0100	Writing to this register resets all registers to their default state. Reading from this register will indicate Device ID 8904h.	Software Reset and Chip ID

Register 00h SW Reset and ID

REGISTER ADDRESS	BIT	LABEL	DEFAULT	DESCRIPTION	REFER TO
R4 (04h) Bias Control 0	3:2	ISEL [1:0]	10	Master Bias Control 00 = Low power bias 01 = Reserved 10 = High performance bias (default) 11 = Reserved Note that the ISEL register should only be changed as part of the Low Power Mode Enable/Disable sequences.	Reference Voltages and Master Bias
	0	BIAS_ENA	0	Enables the Normal bias current generator (for all analogue functions) 0 = Disabled 1 = Enabled	Reference Voltages and Master Bias

Register 04h Bias Control 0

REGISTER ADDRESS	BIT	LABEL	DEFAULT	DESCRIPTION	REFER TO
R5 (05h) VMID Control 0	6	VMID_BUF_ENA	0	Enable VMID buffer to unused Inputs/Outputs 0 = Disabled 1 = Enabled	Analogue Outputs
	2:1	VMID_RES [1:0]	00	VMID Divider Enable and Select 00 = VMID disabled (for OFF mode) 01 = 2 x 50k divider (for normal operation) 10 = 2 x 250k divider (for low power standby) 11 = 2 x 5k divider (for fast start-up)	Analogue Outputs
	0	VMID_ENA	0	VMID Buffer Enable 0 = Disabled 1 = Enabled	Analogue Outputs

Register 05h VMID Control 0

REGISTER ADDRESS	BIT	LABEL	DEFAULT	DESCRIPTION	REFER TO
R6 (06h) Mic Bias Control 0	6:4	MICDET_THR [2:0]	000	MICBIAS Current Detect Threshold (AVDD = 1.8V) 000 = 0.070mA 001 = 0.260mA 010 = 0.450mA 011 = 0.640mA 100 = 0.830mA 101 = 1.020mA 110 = 1.210mA 111 = 1.400mA Note that the value scales with AVDD. The value quoted is correct for AVDD=1.8V.	Electret Condenser Microphone Interface
	3:2	MICSHORT_THR [1:0]	00	MICBIAS Short Circuit Threshold (AVDD = 1.8V) 00 = 0.520mA 01 = 0.880mA 10 = 1.240mA 11 = 1.600mA Note that the value scales with AVDD. The value quoted is correct for AVDD=1.8V.	Electret Condenser Microphone Interface
	1	MICDET_ENA	0	MICBIAS Current and Short Circuit Detect Enable 0 = disabled 1 = enabled	Electret Condenser Microphone Interface
	0	MICBIAS_ENA	0	MICBIAS Enable 0 = disabled 1 = enabled	Electret Condenser Microphone Interface

Register 06h Mic Bias Control 0

REGISTER ADDRESS	BIT	LABEL	DEFAULT	DESCRIPTION	REFER TO
R7 (07h) Mic Bias Control 1	2:0	MICBIAS_SEL [2:0]	000	Selects MICBIAS voltage 000 = 9/10 x AVDD (1.6V) 001 = 10/9 x AVDD (2.0V) 010 = 7/6 x AVDD (2.1V) 011 = 4/3 x AVDD (2.4V) 100 to 111 = 3/2 x AVDD (2.7V) Note that the voltage scales with AVDD. The value quoted in brackets is correct for AVDD=1.8V.	Electret Condenser Microphone Interface

Register 07h Mic Bias Control 1

REGISTER ADDRESS	BIT	LABEL	DEFAULT	DESCRIPTION	REFER TO
R10 (0Ah) Analogue ADC 0	0	ADC_OSR128	1	ADC Oversampling Ratio 0 = Low Power (64 x fs) 1 = High Performance (128 x fs)	ADC Oversampling Ratio (OSR)

Register 0Ah Analogue ADC 0

REGISTER ADDRESS	BIT	LABEL	DEFAULT	DESCRIPTION	REFER TO
R12 (0Ch) Power Management 0	1	INL_ENA	0	Left Input PGA Enable 0 = disabled 1 = enabled	Input PGA Enable
	0	INR_ENA	0	Right Input PGA Enable 0 = disabled 1 = enabled	Input PGA Enable

Register 0Ch Power Management 0

REGISTER ADDRESS	BIT	LABEL	DEFAULT	DESCRIPTION	REFER TO
R14 (0Eh) Power Management 2	1	HPL_PGA_ENA	0	Left Headphone Output Enable 0 = disabled 1 = enabled	Output Signal Paths Enable
	0	HPR_PGA_ENA	0	Right Headphone Output Enable 0 = disabled 1 = enabled	Output Signal Paths Enable

Register 0Eh Power Management 2

REGISTER ADDRESS	BIT	LABEL	DEFAULT	DESCRIPTION	REFER TO
R15 (0Fh) Power Management 3	1	LINEOUTL_PGA_ENA	0	Left Line Output Enable 0 = disabled 1 = enabled	Output Signal Paths Enable
	0	LINEOUTR_PGA_ENA	0	Right Line Output Enable 0 = disabled 1 = enabled	Output Signal Paths Enable

Register 0Fh Power Management 3

REGISTER ADDRESS	BIT	LABEL	DEFAULT	DESCRIPTION	REFER TO
R18 (12h) Power Management 6	3	DACL_ENA	0	Left DAC Enable 0 = DAC disabled 1 = DAC enabled	Digital-to-Analogue Converter (DAC)
	2	DACR_ENA	0	Right DAC Enable 0 = DAC disabled 1 = DAC enabled	Digital-to-Analogue Converter (DAC)
	1	ADCL_ENA	0	Left ADC Enable 0 = disabled 1 = enabled	Digital-to-Analogue Converter (DAC)
	0	ADCR_ENA	0	Right ADC Enable 0 = disabled 1 = enabled	Digital-to-Analogue Converter (DAC)

Register 12h Power Management 6

REGISTER ADDRESS	BIT	LABEL	DEFAULT	DESCRIPTION	REFER TO
R20 (14h) Clock Rates 0	14	TOCLK_RATE_DIV16	0	TOCLK Rate Divider (/16) 0 = f / 1 1 = f / 16	Clocking and Sample Rates
	13	TOCLK_RATE_X4	0	TOCLK Rate Multiplier 0 = f x 1 1 = f x 4	Clocking and Sample Rates
	0	MCLK_DIV	0	Enables divide by 2 on MCLK 0 = SYSCLK = MCLK 1 = SYSCLK = MCLK / 2	Clocking and Sample Rates

Register 14h Clock Rates 0

REGISTER ADDRESS	BIT	LABEL	DEFAULT	DESCRIPTION	REFER TO
R21 (15h) Clock Rates 1	13:10	CLK_SYS_RATE [3:0]	0011	Selects the SYSCLK / fs ratio 0000 = 64 0001 = 128 0010 = 192 0011 = 256 0100 = 384 0101 = 512 0110 = 768 0111 = 1024 1000 = 1408 1001 = 1536	Clocking and Sample Rates
	2:0	SAMPLE_RATE [2:0]	101	Selects the Sample Rate (fs) 000 = 8kHz 001 = 11.025kHz, 12kHz 010 = 16kHz 011 = 22.05kHz, 24kHz 100 = 32kHz 101 = 44.1kHz, 48kHz 110 to 111 = Reserved	Clocking and Sample Rates

Register 15h Clock Rates 1

REGISTER ADDRESS	BIT	LABEL	DEFAULT	DESCRIPTION	REFER TO
R22 (16h) Clock Rates 2	15	MCLK_INV	0	MCLK Invert 0 = MCLK not inverted 1 = MCLK inverted	Clocking and Sample Rates
	14	SYSCLK_SRC	0	SYSCLK Source Select 0 = MCLK 1 = FLL output	Clocking and Sample Rates
	12	TOCLK_RATE	0	TOCLK Rate Divider (/2) 0 = f / 2 1 = f / 1	Clocking and Sample Rates
	3	OPCLK_ENA	0	GPIO Clock Output Enable 0 = disabled 1 = enabled	Clocking and Sample Rates
	2	CLK_SYS_ENA	0	System Clock enable 0 = Disabled 1 = Enabled	Clocking and Sample Rates

REGISTER ADDRESS	BIT	LABEL	DEFAULT	DESCRIPTION	REFER TO
	1	CLK_DSP_ENA	0	DSP Clock enable 0 = Disabled 1 = Enabled	Clocking and Sample Rates
	0	TOCLK_ENA	0	Zero Cross timeout enable 0 = Disabled 1 = Enabled	Clocking and Sample Rates

Register 16h Clock Rates 2

REGISTER ADDRESS	BIT	LABEL	DEFAULT	DESCRIPTION	REFER TO
R24 (18h) Audio Interface 0	12	DACL_DATINV	0	Left DAC Invert 0 = Left DAC output not inverted 1 = Left DAC output inverted	Digital Mixing
	11	DACR_DATINV	0	Right DAC Invert 0 = Right DAC output not inverted 1 = Right DAC output inverted	Digital Mixing
	10:9	DAC_BOOST [1:0]	00	DAC Digital Input Volume Boost 00 = 0dB 01 = +6dB (Input data must not exceed -6dBFS) 10 = +12dB (Input data must not exceed -12dBFS) 11 = +18dB (Input data must not exceed -18dBFS)	Digital Mixing
	8	LOOPBACK	0	Digital Loopback Function 0 = No loopback 1 = Loopback enabled (ADC data output is directly input to DAC data input)	Digital Audio Interface Control
	7	AIFADCL_SRC	0	Left Digital Audio channel source 0 = Left ADC data is output on left channel 1 = Right ADC data is output on left channel	Digital Audio Interface Control
	6	AIFADCR_SRC	1	Right Digital Audio channel source 0 = Left ADC data is output on right channel 1 = Right ADC data is output on right channel	Digital Audio Interface Control
	5	AIFDACL_SRC	0	Left DAC Data Source Select 0 = Left DAC outputs left channel data 1 = Left DAC outputs right channel data	Digital Audio Interface Control
	4	AIFDACR_SRC	1	Right DAC Data Source Select 0 = Right DAC outputs left channel data 1 = Right DAC outputs right channel data	Digital Audio Interface Control
	3	ADC_COMP	0	ADC Companding Enable 0 = disabled 1 = enabled	Digital Audio Interface Control
	2	ADC_COMPMODE	0	ADC Companding Type 0 = µ-law 1 = A-law	Digital Audio Interface Control
	1	DAC_COMP	0	DAC Companding Enable 0 = disabled 1 = enabled	Digital Audio Interface Control
	0	DAC_COMPMODE	0	DAC Companding Type 0 = µ-law 1 = A-law	Digital Audio Interface Control

Register 18h Audio Interface 0

REGISTER ADDRESS	BIT	LABEL	DEFAULT	DESCRIPTION	REFER TO
R25 (19h) Audio Interface 1	13	AIFDAC_TDM	0	DAC TDM Enable 0 = Normal DACDAT operation 1 = TDM enabled on DACDAT	Digital Audio Interface Control
	12	AIFDAC_TDM_ CHAN	0	DACDAT TDM Channel Select 0 = DACDAT data input on slot 0 1 = DACDAT data input on slot 1	Digital Audio Interface Control
	11	AIFADC_TDM	0	ADC TDM Enable 0 = Normal ADCDAT operation 1 = TDM enabled on ADCDAT	Digital Audio Interface Control
	10	AIFADC_TDM_ CHAN	0	ADCDAT TDM Channel Select 0 = ADCDAT outputs data on slot 0 1 = ADCDAT output data on slot 1	Digital Audio Interface Control
	8	AIF_TRIS	0	Audio Interface Tristate 0 = Audio interface pins operate normally 1 = Tristate all audio interface pins	Digital Audio Interface Control
	7	AIF_BCLK_INV	0	BCLK Invert 0 = BCLK not inverted 1 = BCLK inverted	Digital Audio Interface Control
	6	BCLK_DIR	0	Audio Interface BCLK Direction 0 = BCLK is input 1 = BCLK is output	Digital Audio Interface Control
	4	AIF_LRCLK_INV	0	LRC Polarity / DSP Mode A-B select. Right, left and I2S modes – LRC polarity 0 = Not Inverted 1 = Inverted DSP Mode – Mode A-B select 0 = MSB is available on 2nd BCLK rising edge after LRC rising edge (mode A) 1 = MSB is available on 1st BCLK rising edge after LRC rising edge (mode B)	Digital Audio Interface Control
	3:2	AIF_WL [1:0]	10	Digital Audio Interface Word Length 00 = 16 bits 01 = 20 bits 10 = 24 bits 11 = 32 bits	Digital Audio Interface Control
	1:0	AIF_FMT [1:0]	10	Digital Audio Interface Format 00 = Right Justified 01 = Left Justified 10 = I2S 11 = DSP	Digital Audio Interface Control

Register 19h Audio Interface 1

REGISTER ADDRESS	BIT	LABEL	DEFAULT	DESCRIPTION	REFER TO
R26 (1Ah) Audio Interface 2	11:8	OPCLK_DIV [3:0]	0000	GPIO Output Clock Divider 0000 = SYSCLK 0001 = SYSCLK / 2 0010 = SYSCLK / 3 0011 = SYSCLK / 4 0100 = SYSCLK / 5.5 0101 = SYSCLK / 6 0110 = SYSCLK / 8 0111 = SYSCLK / 12 1000 = SYSCLK / 16 1001 to 1111 = Reserved	Digital Audio Interface Control
	4:0	BCLK_DIV [4:0]	0_0100	BCLK Frequency (Master Mode) 00000 = SYSCLK 00001 = SYSCLK / 1.5 00010 = SYSCLK / 2 00011 = SYSCLK / 3 00100 = SYSCLK / 4 (default) 00101 = SYSCLK / 5 00110 = SYSCLK / 5.5 00111 = SYSCLK / 6 01000 = SYSCLK / 8 01001 = SYSCLK / 10 01010 = SYSCLK / 11 01011 = SYSCLK / 12 01100 = SYSCLK / 16 01101 = SYSCLK / 20 01110 = SYSCLK / 22 01111 = SYSCLK / 24 10000 = SYSCLK / 25 10001 = SYSCLK / 30 10010 = SYSCLK / 32 10011 = SYSCLK / 44 10100 = SYSCLK / 48	Digital Audio Interface Control

Register 1Ah Audio Interface 2

REGISTER ADDRESS	BIT	LABEL	DEFAULT	DESCRIPTION	REFER TO
R27 (1Bh) Audio Interface 3	11	LRCLK_DIR	0	Audio Interface LRC Direction 0 = LRC is input 1 = LRC is output	Digital Audio Interface Control
	10:0	LRCLK_RATE [10:0]	000_0100_0000	LRC Rate (Master Mode) LRC clock output = BCLK / LRCLK_RATE Integer (LSB = 1) Valid range: 8 to 2047	Digital Audio Interface Control

Register 1Bh Audio Interface 3

REGISTER ADDRESS	BIT	LABEL	DEFAULT	DESCRIPTION	REFER TO
R30 (1Eh) DAC Digital Volume Left	8	DAC_VU	0	DAC Volume Update Writing a 1 to this bit causes left and right DAC volume to be updated simultaneously	DAC Digital Volume Control
	7:0	DACL_VOL [7:0]	1100_0000	Left DAC Digital Volume 00h = Mute 01h = -71.625dB 02h = -71.250dB … (0.375dB steps) C0h to FFh = 0dB	DAC Digital Volume Control

Register 1Eh DAC Digital Volume Left

REGISTER ADDRESS	BIT	LABEL	DEFAULT	DESCRIPTION	REFER TO
R31 (1Fh) DAC Digital Volume Right	8	DAC_VU	0	DAC Volume Update Writing a 1 to this bit causes left and right DAC volume to be updated simultaneously	DAC Digital Volume Control
	7:0	DACR_VOL [7:0]	1100_0000	Right DAC Digital Volume 00h = Mute 01h = -71.625dB 02h = -71.250dB … (0.375dB steps) C0h to FFh = 0dB	DAC Digital Volume Control

Register 1Fh DAC Digital Volume Right

REGISTER ADDRESS	BIT	LABEL	DEFAULT	DESCRIPTION	REFER TO
R32 (20h) DAC Digital 0	11:8	ADCL_DAC_SVOL [3:0]	0000	Left Digital Sidetone Volume 0000 = -36dB 0001 = -33dB (… 3dB steps) 1011 = -3dB 11XX = 0dB	Digital Mixing
	7:4	ADCR_DAC_SVOL [3:0]	0000	Right Digital Sidetone Volume 0000 = -36dB 0001 = -33dB (… 3dB steps) 1011 = -3dB 11XX = 0dB	Digital Mixing
	3:2	ADC_TO_DACL [1:0]	00	Left DAC Digital Sidetone Source 00 = No sidetone 01 = Left ADC 10 = Right ADC 11 = Reserved	Digital Mixing
	1:0	ADC_TO_DACR [1:0]	00	Right DAC Digital Sidetone Source 00 = No sidetone 01 = Left ADC 10 = Right ADC 11 = Reserved	Digital Mixing

Register 20h DAC Digital 0

REGISTER ADDRESS	BIT	LABEL	DEFAULT	DESCRIPTION	REFER TO
R33 (21h) DAC Digital 1	12	DAC_MONO	0	DAC Mono Mix 0 = Stereo 1 = Mono (Mono mix output on enabled DAC)	DAC Mono Mix
	11	DAC_SB_FILT	0	Selects DAC filter characteristics 0 = Normal mode 1 = Sloping stopband mode (recommended when fs <= 24kHz)	DAC Sloping Stopband Filter
	10	DAC_MUTERATE	0	DAC Soft Mute Ramp Rate 0 = Fast ramp (fs/2, maximum ramp time is 10.7ms at fs=48k) 1 = Slow ramp (fs/32, maximum ramp time is 171ms at fs=48k)	DAC Soft Mute and Soft Un-Mute
	9	DAC_UNMUTE_RAMP	0	DAC Soft Mute Mode 0 = Disabling soft-mute (DAC_MUTE=0) will cause the DAC volume to change immediately to DACL_VOL and DACR_VOL settings 1 = Disabling soft-mute (DAC_MUTE=0) will cause the DAC volume to ramp up gradually to the DACL_VOL and DACR_VOL settings	DAC Soft Mute and Soft Un-Mute
	6	DAC_OSR128	0	DAC Oversample Rate Select 0 = Low power (normal OSR) 1 = High performance (double OSR)	DAC Oversampling Ratio (OSR)
	3	DAC_MUTE	1	DAC Soft Mute Control 0 = DAC Un-mute 1 = DAC Mute	DAC Soft Mute and Soft Un-Mute
	2:1	DEEMPH [1:0]	00	DAC De-Emphasis Control 00 = No de-emphasis 01 = 32kHz sample rate 10 = 44.1kHz sample rate 11 = 48kHz sample rate	DAC De-Emphasis

Register 21h DAC Digital 1

REGISTER ADDRESS	BIT	LABEL	DEFAULT	DESCRIPTION	REFER TO
R36 (24h) ADC Digital Volume Left	8	ADC_VU	0	ADC Volume Update Writing a 1 to this bit causes left and right ADC volume to be updated simultaneously	Analogue-to-Digital Converter (ADC)
	7:0	ADCL_VOL [7:0]	1100_0000	Left ADC Digital Volume 00h = Mute 01h = -71.625dB 02h = -71.250dB … (0.375dB steps) C0h = 0dB … (0.375dB steps) EFh to FFh = +17.625dB	Analogue-to-Digital Converter (ADC)

Register 24h ADC Digital Volume Left

REGISTER ADDRESS	BIT	LABEL	DEFAULT	DESCRIPTION	REFER TO
R37 (25h) ADC Digital Volume Right	8	ADC_VU	0	ADC Volume Update Writing a 1 to this bit causes left and right ADC volume to be updated simultaneously	Analogue-to-Digital Converter (ADC)
	7:0	ADCR_VOL [7:0]	1100_0000	Right ADC Digital Volume 00h = Mute 01h = -71.625dB 02h = -71.250dB … (0.375dB steps) C0h = 0dB … (0.375dB steps) EFh to FFh = +17.625dB	Analogue-to-Digital Converter (ADC)

Register 25h ADC Digital Volume Right

REGISTER ADDRESS	BIT	LABEL	DEFAULT	DESCRIPTION	REFER TO
R38 (26h) ADC Digital 0	6:5	ADC_HPF_CUT [1:0]	00	ADC Digital High Pass Filter Cut-Off Frequency (fc) 00 = Hi-fi mode (fc=4Hz at fs=48kHz) 01 = Voice mode 1 (fc=127Hz at fs=16kHz) 10 = Voice mode 2 (fc=130Hz at fs=8kHz) 11 = Voice mode 3 (fc=267Hz at fs=8kHz) (Note: fc scales with sample rate fs.)	Analogue-to-Digital Converter (ADC)
	4	ADC_HPF	1	ADC Digital High Pass Filter Enable 0 = disabled 1 = enabled	Analogue-to-Digital Converter (ADC)
	1	ADCL_DATINV	0	Left ADC Invert 0 = Left ADC output not inverted 1 = Left ADC output inverted	Analogue-to-Digital Converter (ADC)
	0	ADCR_DATINV	0	Right ADC Invert 0 = Right ADC output not inverted 1 = Right ADC output inverted	Analogue-to-Digital Converter (ADC)

Register 26h ADC Digital 0

REGISTER ADDRESS	BIT	LABEL	DEFAULT	DESCRIPTION	REFER TO
R39 (27h) Digital Microphone 0	12	DMIC_ENA	0	Enables Digital Microphone mode 0 = Audio DSP input is from ADC 1 = Audio DSP input is from digital microphone interface When DMIC_ENA = 0, the Digital microphone clock (DMICCLK) is held low.	Digital Microphone Interface
	11	DMIC_SRC	0	Selects Digital Microphone Data Input pin 0 = IN1L/DMICDAT1 1 = IN1R/DMICDAT2	Digital Microphone Interface

Register 27h Digital Microphone 0

REGISTER ADDRESS	BIT	LABEL	DEFAULT	DESCRIPTION	REFER TO
R40 (28h) DRC 0	15	DRC_ENA	0	DRC enable 1 = enabled 0 = disabled	Dynamic Range Control (DRC)
	14	DRC_DAC_PATH	0	DRC path select 0 = ADC path 1 = DAC path	Dynamic Range Control (DRC)
	12:11	DRC_GS_HYST_ LVL [1:0]	00	Gain smoothing hysteresis threshold 00 = Low 01 = Medium (recommended) 10 = High 11 = Reserved	Dynamic Range Control (DRC)
	10:6	DRC_STARTUP_ GAIN [4:0]	0_0110	Initial gain at DRC startup 00000 = -3dB 00001 = -2.5dB 00010 = -2dB 00011 = -1.5dB 00100 = -1dB 00101 = -0.5dB 00110 = 0dB (default) 00111 = 0.5dB 01000 = 1dB 01001 = 1.5dB 01010 = 2dB 01011 = 2.5dB 01100 = 3dB 01101 = 3.5dB 01110 = 4dB 01111 = 4.5dB 10000 = 5dB 10001 = 5.5dB 10010 = 6dB 10011 to 11111 = Reserved	Dynamic Range Control (DRC)
	5	DRC_FF_DELAY	1	Feed-forward delay for anti-clip feature 0 = 5 samples 1 = 9 samples Time delay can be calculated as 5/fs or 9/ fs, where fs is the sample rate.	Dynamic Range Control (DRC)
	3	DRC_GS_ENA	1	Gain smoothing enable 0 = disabled 1 = enabled	Dynamic Range Control (DRC)
	2	DRC_QR	1	Quick release enable 0 = disabled 1 = enabled	Dynamic Range Control (DRC)
	1	DRC_ANTICLIP	1	Anti-clip enable 0 = disabled 1 = enabled	Dynamic Range Control (DRC)
	0	DRC_GS_HYST	1	Gain smoothing hysteresis enable 0 = disabled 1 = enabled	Dynamic Range Control (DRC)

Register 28h DRC 0

REGISTER ADDRESS	BIT	LABEL	DEFAULT	DESCRIPTION	REFER TO
R41 (29h) DRC 1	15:12	DRC_ATK [3:0]	0011	Gain attack rate (seconds/6dB) 0000 = Reserved 0001 = 182µs 0010 = 363µs 0011 = 726µs (default) 0100 = 1.45ms 0101 = 2.9ms 0110 = 5.8ms 0111 = 11.6ms 1000 = 23.2ms 1001 = 46.4ms 1010 = 92.8ms 1011-1111 = Reserved	Dynamic Range Control (DRC)
	11:8	DRC_DCY [3:0]	0010	Gain decay rate (seconds/6dB) 0000 = 186ms 0001 = 372ms 0010 = 743ms (default) 0011 = 1.49s 0100 = 2.97s 0101 = 5.94s 0110 = 11.89s 0111 = 23.78s 1000 = 47.56s 1001-1111 = Reserved	Dynamic Range Control (DRC)
	7:6	DRC_QR_THR [1:0]	01	Quick release crest factor threshold 00 = 12dB 01 = 18dB (default) 10 = 24dB 11 = 30dB	Dynamic Range Control (DRC)
	5:4	DRC_QR_DCY [1:0]	00	Quick release decay rate (seconds/6dB) 00 = 0.725ms (default) 01 = 1.45ms 10 = 5.8ms 11 = Reserved	Dynamic Range Control (DRC)
	3:2	DRC_MINGAIN [1:0]	10	Minimum gain the DRC can use to attenuate audio signals 00 = 0dB (default) 01 = -6dB 10 = -12dB 11 = -18dB	Dynamic Range Control (DRC)
	1:0	DRC_MAXGAIN [1:0]	00	Maximum gain the DRC can use to boost audio signals 00 = 12dB 01 = 18dB (default) 10 = 24dB 11 = 36dB	Dynamic Range Control (DRC)

Register 29h DRC 1

REGISTER ADDRESS	BIT	LABEL	DEFAULT	DESCRIPTION	REFER TO
R42 (2Ah) DRC 2	5:3	DRC_HI_COMP [2:0]	000	Compressor slope (upper region) 000 = 1 (no compression) 001 = 1/2 010 = 1/4 011 = 1/8 100 = 1/16 101 = 0 110 to 111 = Reserved	Dynamic Range Control (DRC)
	2:0	DRC_LO_COMP [2:0]	000	Compressor slope (lower region) 000 = 1 (no compression) 001 = 1/2 010 = 1/4 011 = 1/8 100 = 0 101 to 111 = Reserved	Dynamic Range Control (DRC)

Register 2Ah DRC 2

REGISTER ADDRESS	BIT	LABEL	DEFAULT	DESCRIPTION	REFER TO
R43 (2Bh) DRC 3	10:5	DRC_KNEE_IP [5:0]	00_0000	Input signal at the Compressor 'knee'. 000000 = 0dB 000001 = -0.75dB 000010 = -1.5dB … (-0.75dB steps) 111100 = -45dB 111101 to 111111 = Reserved	Dynamic Range Control (DRC)
	4:0	DRC_KNEE_OP [4:0]	0_0000	Output signal at the Compressor 'knee'. 00000 = 0dB 00001 = -0.75dB 00010 = -1.5dB … (-0.75dB steps) 11110 = -22.5dB 11111 = Reserved	Dynamic Range Control (DRC)

Register 2Bh DRC 3

REGISTER ADDRESS	BIT	LABEL	DEFAULT	DESCRIPTION	REFER TO
R44 (2Ch) Analogue Left Input 0	7	LINMUTE	1	Left Input PGA Mute 0 = not muted 1 = muted	Input PGA Gain Control
	4:0	LIN_VOL [4:0]	0_0101	Left Input PGA Volume If L_MODE = 00 (Single ended) OR L_MODE = 01 (Differential Line) 00000 = -1.5 dB 00001 = -1.3 dB 00010 = -1.0 dB 00011 = -0.7 dB 00100 = -0.3 dB 00101 = +0.0 dB (default) 00110 = +0.3 dB 00111 = +0.7 dB 01000 = +1.0 dB 01001 = +1.4 dB 01010 = +1.8 dB 01011 = +2.3 dB 01100 = +2.7 dB 01101 = +3.2 dB 01110 = +3.7 dB 01111 = +4.2 dB 10000 = +4.8 dB 10001 = +5.4 dB 10010 = +6.0 dB 10011 = +6.7 dB 10100 = +7.5 dB 10101 = +8.3 dB 10110 = +9.2 dB 10111 = +10.2 dB 11000 = +11.4 dB 11001 = +12.7 dB 11010 = +14.3 dB 11011 = +16.2 dB 11100 = +19.2 dB 11101 = +22.3 dB 11110 = +25.2 dB 11111 = +28.3 dB If L_MODE = 10 (Differential MIC) 00000 = Reserved 00001 = +12 dB 00010 = +15 dB 00011 = +18 dB 00100 = +21 dB 00101 = +24 dB (default) 00110 = +27 dB 00111 to 11111 = +30 dB	Input PGA Gain Control

Register 2Ch Analogue Left Input 0

REGISTER ADDRESS	BIT	LABEL	DEFAULT	DESCRIPTION	REFER TO
R45 (2Dh) Analogue Right Input 0	7	RINMUTE	1	Right Input PGA Mute 0 = not muted 1 = muted	Input PGA Gain Control
	4:0	RIN_VOL [4:0]	0_0101	Right Input PGA Volume If R_MODE = 00 (Single ended) OR R_MODE = 01 (Differential Line) 00000 = -1.5 dB 00001 = -1.3 dB 00010 = -1.0 dB 00011 = -0.7 dB 00100 = -0.3 dB 00101 = +0.0 dB (default) 00110 = +0.3 dB 00111 = +0.7 dB 01000 = +1.0 dB 01001 = +1.4 dB 01010 = +1.8 dB 01011 = +2.3 dB 01100 = +2.7 dB 01101 = +3.2 dB 01110 = +3.7 dB 01111 = +4.2 dB 10000 = +4.8 dB 10001 = +5.4 dB 10010 = +6.0 dB 10011 = +6.7 dB 10100 = +7.5 dB 10101 = +8.3 dB 10110 = +9.2 dB 10111 = +10.2 dB 11000 = +11.4 dB 11001 = +12.7 dB 11010 = +14.3 dB 11011 = +16.2 dB 11100 = +19.2 dB 11101 = +22.3 dB 11110 = +25.2 dB 11111 = +28.3 dB If R_MODE = 10 (Differential MIC) 00000 = Reserved 00001 = +12 dB 00010 = +15 dB 00011 = +18 dB 00100 = +21 dB 00101 = +24 dB (default) 00110 = +27 dB 00111 to 11111 = +30 dB	Input PGA Gain Control

Register 2Dh Analogue Right Input 0

REGISTER ADDRESS	BIT	LABEL	DEFAULT	DESCRIPTION	REFER TO
R46 (2Eh) Analogue Left Input 1	6	INL_CM_ENA	1	Left Input PGA Common Mode Rejection enable 0 = Disabled 1 = Enabled (only available for L_MODE=01 – Differential Line)	Input PGA Common Mode Amplifier
	5:4	L_IP_SEL_N [1:0]	00	In Single-Ended or Differential Line Modes, this field selects the input pin for the inverting side of the left input path. In Differential Mic Mode, this field selects the input pin for the non-inverting side of the left input path. 00 = IN1L 01 = IN2L 1X = IN3L	Analogue Input Signal Path
	3:2	L_IP_SEL_P [1:0]	01	In Single-Ended or Differential Line Modes, this field selects the input pin for the non-inverting side of the left input path. In Differential Mic Mode, this field selects the input pin for the inverting side of the left input path. 00 = IN1L 01 = IN2L 1X = IN3L	Analogue Input Signal Path
	1:0	L_MODE [1:0]	00	Sets the mode for the left analogue input: 00 = Single-Ended 01 = Differential Line 10 = Differential MIC 11 = Reserved	Analogue Input Signal Path

Register 2Eh Analogue Left Input 1

REGISTER ADDRESS	BIT	LABEL	DEFAULT	DESCRIPTION	REFER TO
R47 (2Fh) Analogue Right Input 1	6	INR_CM_ENA	1	Right Input PGA Common Mode Rejection enable 0 = Disabled 1 = Enabled (only available for R_MODE=01 – Differential Line)	Input PGA Common Mode Amplifier
	5:4	R_IP_SEL_N [1:0]	00	In Single-Ended or Differential Line Modes, this field selects the input pin for the inverting side of the right input path. In Differential Mic Mode, this field selects the input pin for the non-inverting side of the right input path. 00 = IN1R 01 = IN2R 1X = IN3R	Analogue Input Signal Path
	3:2	R_IP_SEL_P [1:0]	01	In Single-Ended or Differential Line Modes, this field selects the input pin for the non-inverting side of the right input path. In Differential Mic Mode, this field selects the input pin for the inverting side of the right input path. 00 = IN1R 01 = IN2R 1X = IN3R	Analogue Input Signal Path
	1:0	R_MODE [1:0]	00	Sets the mode for the right analogue input: 00 = Single-Ended 01 = Differential Line 10 = Differential MIC 11 = Reserved	Analogue Input Signal Path

Register 2Fh Analogue Right Input 1

REGISTER ADDRESS	BIT	LABEL	DEFAULT	DESCRIPTION	REFER TO
R57 (39h) Analogue OUT1 Left	8	HPOUTL_MUTE	0	Left Headphone Output Mute 0 = Un-mute 1 = Mute	Output Volume Control
	7	HPOUT_VU	0	Headphone Output Volume Update Writing a 1 to this bit will update HPOUTL and HPOUTR volumes simultaneously.	Output Volume Control
	6	HPOUTLZC	0	Left Headphone Output Zero Cross Enable 0 = disabled 1 = enabled	Output Volume Control
	5:0	HPOUTL_VOL [5:0]	10_1101	Left Headphone Output Volume 000000 = -57dB 000001 = -56dB (… 1dB steps) 111001 = 0dB (… 1dB steps) 111110 = +5dB 111111 = +6dB	Output Volume Control

Register 39h Analogue OUT1 Left

REGISTER ADDRESS	BIT	LABEL	DEFAULT	DESCRIPTION	REFER TO
R58 (3Ah) Analogue OUT1 Right	8	HPOUTR_MUTE	0	Right Headphone Output Mute 0 = Un-mute 1 = Mute	Output Volume Control
	7	HPOUT_VU	0	Headphone Output Volume Update Writing a 1 to this bit will update HPOUTL and HPOUTR volumes simultaneously.	Output Volume Control
	6	HPOUTRZC	0	Right Headphone Output Zero Cross Enable 0 = disabled 1 = enabled	Output Volume Control
	5:0	HPOUTR_VOL [5:0]	10_1101	Right Headphone Output Volume 000000 = -57dB 000001 = -56dB (… 1dB steps) 111001 = 0dB (… 1dB steps) 111110 = +5dB 111111 = +6dB	Output Volume Control

Register 3Ah Analogue OUT1 Right

REGISTER ADDRESS	BIT	LABEL	DEFAULT	DESCRIPTION	REFER TO
R59 (3Bh) Analogue OUT2 Left	8	LINEOUTL_MUTE	0	Left Line Output Mute 0 = Un-mute 1 = Mute	Output Volume Control
	7	LINEOUT_VU	0	Line Output Volume Update Writing a 1 to this bit will update LINEOUTL and LINEOUTR volumes simultaneously.	Output Volume Control
	6	LINEOUTLZC	0	Left Line Output Zero Cross Enable 0 = disabled 1 = enabled	Output Volume Control
	5:0	LINEOUTL_VOL [5:0]	11_1001	Left Line Output Volume 000000 = -57dB 000001 = -56dB (… 1dB steps) 111001 = 0dB (… 1dB steps) 111110 = +5dB 111111 = +6dB	Output Volume Control

Register 3Bh Analogue OUT2 Left

REGISTER ADDRESS	BIT	LABEL	DEFAULT	DESCRIPTION	REFER TO
R60 (3Ch) Analogue OUT2 Right	8	LINEOUTR_MUTE	0	Right Line Output Mute 0 = Un-mute 1 = Mute	Output Volume Control
	7	LINEOUT_VU	0	Line Output Volume Update Writing a 1 to this bit will update LINEOUTL and LINEOUTR volumes simultaneously.	Output Volume Control
	6	LINEOUTRZC	0	Right Line Output Zero Cross Enable 0 = disabled 1 = enabled	Output Volume Control
	5:0	LINEOUTR_VOL [5:0]	11_1001	Right Line Output Volume 000000 = -57dB 000001 = -56dB (… 1dB steps) 111001 = 0dB (… 1dB steps) 111110 = +5dB 111111 = +6dB	Output Volume Control

Register 3Ch Analogue OUT2 Right

REGISTER ADDRESS	BIT	LABEL	DEFAULT	DESCRIPTION	REFER TO
R61 (3Dh) Analogue OUT12 ZC	3	HPL_BYP_ENA	0	Selects input for left headphone output MUX 0 = Left DAC 1 = Left input PGA (Analogue bypass)	Output Signal Paths Enable
	2	HPR_BYP_ENA	0	Selects input for right headphone output MUX 0 = Right DAC 1 = Right input PGA (Analogue bypass)	Output Signal Paths Enable
	1	LINEOUTL_BYP_ENA	0	Selects input for left line output MUX 0 = Left DAC 1 = Left input PGA (Analogue bypass)	Output Signal Paths Enable
	0	LINEOUTR_BYP_ENA	0	Selects input for right line output MUX 0 = Right DAC 1 = Right input PGA (Analogue bypass)	Output Signal Paths Enable

Register 3Dh Analogue OUT12 ZC

REGISTER ADDRESS	BIT	LABEL	DEFAULT	DESCRIPTION	REFER TO
R67 (43h) DC Servo 0	3	DCS_ENA_CHAN_3	0	DC Servo enable for LINEOUTR 0 = disabled 1 = enabled	DC Servo
	2	DCS_ENA_CHAN_2	0	DC Servo enable for LINEOUTL 0 = disabled 1 = enabled	DC Servo
	1	DCS_ENA_CHAN_1	0	DC Servo enable for HPOUTR 0 = disabled 1 = enabled	DC Servo
	0	DCS_ENA_CHAN_0	0	DC Servo enable for HPOUTL 0 = disabled 1 = enabled	DC Servo

Register 43h DC Servo 0

REGISTER ADDRESS	BIT	LABEL	DEFAULT	DESCRIPTION	REFER TO
R68 (44h) DC Servo 1	15	DCS_TRIG_SINGLE_3	0	Writing 1 to this bit selects a single DC offset correction for LINEOUTR. In readback, a value of 1 indicates that the DC Servo single correction is in progress.	DC Servo
	14	DCS_TRIG_SINGLE_2	0	Writing 1 to this bit selects a single DC offset correction for LINEOUTL. In readback, a value of 1 indicates that the DC Servo single correction is in progress.	DC Servo
	13	DCS_TRIG_SINGLE_1	0	Writing 1 to this bit selects a single DC offset correction for HPOUTR. In readback, a value of 1 indicates that the DC Servo single correction is in progress.	DC Servo
	12	DCS_TRIG_SINGLE_0	0	Writing 1 to this bit selects a single DC offset correction for HPOUTL. In readback, a value of 1 indicates that the DC Servo single correction is in progress.	DC Servo
	11	DCS_TRIG_SERIES_3	0	Writing 1 to this bit selects a series of DC offset corrections for LINEOUTR. In readback, a value of 1 indicates that the DC Servo DAC Write correction is in progress.	DC Servo

REGISTER ADDRESS	BIT	LABEL	DEFAULT	DESCRIPTION	REFER TO
	10	DCS_TRIG_SERIES_2	0	Writing 1 to this bit selects a series of DC offset corrections for LINEOUTL. In readback, a value of 1 indicates that the DC Servo DAC Write correction is in progress.	DC Servo
	9	DCS_TRIG_SERIES_1	0	Writing 1 to this bit selects a series of DC offset corrections for HPOUTR. In readback, a value of 1 indicates that the DC Servo DAC Write correction is in progress.	DC Servo
	8	DCS_TRIG_SERIES_0	0	Writing 1 to this bit selects a series of DC offset corrections for HPOUTL. In readback, a value of 1 indicates that the DC Servo DAC Write correction is in progress.	DC Servo
	7	DCS_TRIG_STARTUP_3	0	Writing 1 to this bit selects Start-Up DC Servo mode for LINEOUTR. In readback, a value of 1 indicates that the DC Servo Start-Up correction is in progress.	DC Servo
	6	DCS_TRIG_STARTUP_2	0	Writing 1 to this bit selects Start-Up DC Servo mode for LINEOUTL. In readback, a value of 1 indicates that the DC Servo Start-Up correction is in progress.	DC Servo
	5	DCS_TRIG_STARTUP_1	0	Writing 1 to this bit selects Start-Up DC Servo mode for HPOUTR. In readback, a value of 1 indicates that the DC Servo Start-Up correction is in progress.	DC Servo
	4	DCS_TRIG_STARTUP_0	0	Writing 1 to this bit selects Start-Up DC Servo mode for HPOUTL. In readback, a value of 1 indicates that the DC Servo Start-Up correction is in progress.	DC Servo
	3	DCS_TRIG_DAC_WR_3	0	Writing 1 to this bit selects DAC Write DC Servo mode for LINEOUTR. In readback, a value of 1 indicates that the DC Servo DAC Write correction is in progress.	DC Servo
	2	DCS_TRIG_DAC_WR_2	0	Writing 1 to this bit selects DAC Write DC Servo mode for LINEOUTL. In readback, a value of 1 indicates that the DC Servo DAC Write correction is in progress.	DC Servo
	1	DCS_TRIG_DAC_WR_1	0	Writing 1 to this bit selects DAC Write DC Servo mode for HPOUTR. In readback, a value of 1 indicates that the DC Servo DAC Write correction is in progress.	DC Servo
	0	DCS_TRIG_DAC_WR_0	0	Writing 1 to this bit selects DAC Write DC Servo mode for HPOUTL. In readback, a value of 1 indicates that the DC Servo DAC Write correction is in progress.	DC Servo

Register 44h DC Servo 1

REGISTER ADDRESS	BIT	LABEL	DEFAULT	DESCRIPTION	REFER TO
R69 (45h) DC Servo 2	11:8	DCS_TIMER_PERIOD_23 [3:0]	1010	Time between periodic updates for LINEOUTL/LINEOUTR. Time is calculated as 0.256s x (2^PERIOD) 0000 = Off 0001 = 0.52s 1010 = 266s (4min 26s) 1111 = 8519s (2hr 22s)	DC Servo
	3:0	DCS_TIMER_PERIOD_01 [3:0]	1010	Time between periodic updates for HPOUTL/HPOUTR. Time is calculated as 0.256s x (2^PERIOD) 0000 = Off 0001 = 0.52s 1010 = 266s (4min 26s) 1111 = 8519s (2hr 22s)	DC Servo

Register 45h DC Servo 2

REGISTER ADDRESS	BIT	LABEL	DEFAULT	DESCRIPTION	REFER TO
R71 (47h) DC Servo 4	6:0	DCS_SERIES_NO_23 [6:0]	010_1010	Number of DC Servo updates to perform in a series event for LINEOUTL/LINEOUTR. 0 = 1 updates 1 = 2 updates ... 127 = 128 updates	DC Servo

Register 47h DC Servo 4

REGISTER ADDRESS	BIT	LABEL	DEFAULT	DESCRIPTION	REFER TO
R72 (48h) DC Servo 5	6:0	DCS_SERIES_NO_01 [6:0]	010_1010	Number of DC Servo updates to perform in a series event for HPOUTL/HPOUTR. 0 = 1 updates 1 = 2 updates ... 127 = 128 updates	DC Servo

Register 48h DC Servo 5

REGISTER ADDRESS	BIT	LABEL	DEFAULT	DESCRIPTION	REFER TO
R73 (49h) DC Servo 6	7:0	DCS_DAC_WR_VAL_3 [7:0]	0000_0000	DC Offset value for LINEOUTR in DAC Write DC Servo mode in two's complement format. In readback, the current DC offset value is returned in two's complement format. Two's complement format: LSB is 0.25mV. Range is +/-32mV	DC Servo

Register 49h DC Servo 6

REGISTER ADDRESS	BIT	LABEL	DEFAULT	DESCRIPTION	REFER TO
R74 (4Ah) DC Servo 7	7:0	DCS_DAC_WR_VAL_2 [7:0]	0000_0000	DC Offset value for LINEOUTL in DAC Write DC Servo mode in two's complement format. In readback, the current DC offset value is returned in two's complement format. Two's complement format: LSB is 0.25mV. Range is +/-32mV	DC Servo

Register 4Ah DC Servo 7

REGISTER ADDRESS	BIT	LABEL	DEFAULT	DESCRIPTION	REFER TO
R75 (4Bh) DC Servo 8	7:0	DCS_DAC_WR_VAL_1 [7:0]	0000_0000	DC Offset value for HPOUTR in DAC Write DC Servo mode in two's complement format. In readback, the current DC offset value is returned in two's complement format. Two's complement format: LSB is 0.25mV. Range is +/-32mV	DC Servo

Register 4Bh DC Servo 8

REGISTER ADDRESS	BIT	LABEL	DEFAULT	DESCRIPTION	REFER TO
R76 (4Ch) DC Servo 9	7:0	DCS_DAC_WR_VAL_0 [7:0]	0000_0000	DC Offset value for HPOUTL in DAC Write DC Servo mode in two's complement format. In readback, the current DC offset value is returned in two's complement format. Two's complement format: LSB is 0.25mV. Range is +/-32mV	DC Servo

Register 4Ch DC Servo 9

REGISTER ADDRESS	BIT	LABEL	DEFAULT	DESCRIPTION	REFER TO
R77 (4Dh) DC Servo Readback 0	11:8	DCS_CAL_COMPLETE [3:0]	0000	DC Servo Complete status [3] - LINEOUTR [2] - LINEOUTL [1] - HPOUTR [0] - HPOUTL 0 = DAC Write or Start-Up DC Servo mode not completed. 1 = DAC Write or Start-Up DC Servo mode complete.	DC Servo

REGISTER ADDRESS	BIT	LABEL	DEFAULT	DESCRIPTION	REFER TO
	7:4	DCS_DAC_WR_COMPLETE [3:0]	0000	DC Servo DAC Write status [3] - LINEOUTR [2] - LINEOUTL [1] - HPOUTR [0] - HPOUTL 0 = DAC Write DC Servo mode not completed. 1 = DAC Write DC Servo mode complete.	DC Servo
	3:0	DCS_STARTUP_COMPLETE [3:0]	0000	DC Servo Start-Up status [3] - LINEOUTR [2] - LINEOUTL [1] - HPOUTR [0] - HPOUTL 0 = Start-Up DC Servo mode not completed.. 1 = Start-Up DC Servo mode complete.	DC Servo

Register 4Dh DC Servo Readback 0

REGISTER ADDRESS	BIT	LABEL	DEFAULT	DESCRIPTION	REFER TO
R90 (5Ah) Analogue HP 0	7	HPL_RMV_SHORT	0	Removes HPOUTL short 0 = HPOUTL short enabled 1 = HPOUTL short removed For normal operation, this bit should be set as the final step of the HPL Enable sequence.	Pop Suppression Control
	6	HPL_ENA_OUTP	0	Enables HPOUTL output stage 0 = Disabled 1 = Enabled For normal operation, this bit should be set to 1 after the DC offset cancellation has been scheduled.	Pop Suppression Control
	5	HPL_ENA_DLY	0	Enables HPOUTL intermediate stage 0 = Disabled 1 = Enabled For normal operation, this bit should be set to 1 after the output signal path has been configured, and before DC offset cancellation is scheduled. This bit should be set with at least 20us delay after HPL_ENA.	Pop Suppression Control
	4	HPL_ENA	0	Enables HPOUTL input stage 0 = Disabled 1 = Enabled For normal operation, this bit should be set as the first step of the HPL Enable sequence.	Pop Suppression Control
	3	HPR_RMV_SHORT	0	Removes HPOUTR short 0 = HPOUTR short enabled 1 = HPOUTR short removed For normal operation, this bit should be set as the final step of the HPR Enable sequence.	Pop Suppression Control
	2	HPR_ENA_OUTP	0	Enables HPOUTR output stage 0 = Disabled 1 = Enabled For normal operation, this bit should be set to 1 after the DC offset cancellation has been scheduled.	Pop Suppression Control

REGISTER ADDRESS	BIT	LABEL	DEFAULT	DESCRIPTION	REFER TO
	1	HPR_ENA_DLY	0	Enables HPOUTR intermediate stage 0 = Disabled 1 = Enabled For normal operation, this bit should be set to 1 after the output signal path has been configured, and before DC offset cancellation is scheduled. This bit should be set with at least 20us delay after HPR_ENA.	Pop Suppression Control
	0	HPR_ENA	0	Enables HPOUTR input stage 0 = Disabled 1 = Enabled For normal operation, this bit should be set as the first step of the HPR Enable sequence.	Pop Suppression Control

Register 5Ah Analogue HP 0

REGISTER ADDRESS	BIT	LABEL	DEFAULT	DESCRIPTION	REFER TO
R94 (5Eh) Analogue Lineout 0	7	LINEOUTL_RMV_SHORT	0	Removes LINEOUTL short 0 = LINEOUTL short enabled 1 = LINEOUTL short removed For normal operation, this bit should be set as the final step of the LINEOUTL Enable sequence.	Pop Suppression Control
	6	LINEOUTL_ENA_OUTP	0	Enables LINEOUTL output stage 0 = Disabled 1 = Enabled For normal operation, this bit should be set to 1 after the DC offset cancellation has been scheduled.	Pop Suppression Control
	5	LINEOUTL_ENA_DLY	0	Enables LINEOUTL intermediate stage 0 = Disabled 1 = Enabled For normal operation, this bit should be set to 1 after the output signal path has been configured, and before DC offset cancellation is scheduled. This bit should be set with at least 20us delay after LINEOUTL_ENA.	Pop Suppression Control
	4	LINEOUTL_ENA	0	Enables LINEOUTL input stage 0 = Disabled 1 = Enabled For normal operation, this bit should be set as the first step of the LINEOUTL Enable sequence.	Pop Suppression Control
	3	LINEOUTR_RMV_SHORT	0	Removes LINEOUTR short 0 = LINEOUTR short enabled 1 = LINEOUTR short removed For normal operation, this bit should be set as the final step of the LINEOUTR Enable sequence.	Pop Suppression Control
	2	LINEOUTR_ENA_OUTP	0	Enables LINEOUTR output stage 0 = Disabled 1 = Enabled For normal operation, this bit should be set to 1 after the DC offset cancellation has been scheduled.	Pop Suppression Control
	1	LINEOUTR_ENA_DLY	0	Enables LINEOUTR intermediate stage 0 = Disabled 1 = Enabled For normal operation, this bit should be set to 1 after the output signal path has been configured, and before DC offset cancellation is scheduled. This bit should be set with at least 20us delay after LINEOUTR_ENA.	Pop Suppression Control
	0	LINEOUTR_ENA	0	Enables LINEOUTR input stage 0 = Disabled 1 = Enabled For normal operation, this bit should be set as the first step of the LINEOUTR Enable sequence.	Pop Suppression Control

Register 5Eh Analogue Lineout 0

REGISTER ADDRESS	BIT	LABEL	DEFAULT	DESCRIPTION	REFER TO
R98 (62h) Charge Pump 0	0	CP_ENA	0	Enable charge-pump digits 0 = disable 1 = enable	Charge Pump

Register 62h Charge Pump 0

REGISTER ADDRESS	BIT	LABEL	DEFAULT	DESCRIPTION	REFER TO
R104 (68h) Class W	0	CP_DYN_PWR	0	Enable dynamic charge pump power control 0 = Charge pump controlled by volume register settings (Class G) 1 = Charge pump controlled by real-time audio level (Class W) Class W is recommended for lowest power consumption.	Charge Pump

Register 68h Class W

REGISTER ADDRESS	BIT	LABEL	DEFAULT	DESCRIPTION	REFER TO
R108 (6Ch) Write Sequencer 0	8	WSEQ_ENA	0	Write Sequencer Enable. 0 = Disabled 1 = Enabled	Control Write Sequencer
	4:0	WSEQ_WRITE_INDEX [4:0]	0_0000	Sequence Write Index. This is the memory location to which any updates to R109 and R110 will be copied. 0 to 31 = RAM addresses	Control Write Sequencer

Register 6Ch Write Sequencer 0

REGISTER ADDRESS	BIT	LABEL	DEFAULT	DESCRIPTION	REFER TO
R109 (6Dh) Write Sequencer 1	14:12	WSEQ_DATA_WIDTH [2:0]	000	Width of the data block written in this sequence step. 000 = 1 bit 001 = 2 bits 010 = 3 bits 011 = 4 bits 100 = 5 bits 101 = 6 bits 110 = 7 bits 111 = 8 bits	Control Write Sequencer
	11:8	WSEQ_DATA_START [3:0]	0000	Bit position of the LSB of the data block written in this sequence step. 0000 = Bit 0 … 1111 = Bit 15	Control Write Sequencer
	7:0	WSEQ_ADDR [7:0]	0000_0000	Control Register Address to be written to in this sequence step.	Control Write Sequencer

Register 6Dh Write Sequencer 1

REGISTER ADDRESS	BIT	LABEL	DEFAULT	DESCRIPTION	REFER TO
R110 (6Eh) Write Sequencer 2	14	WSEQ_EOS	0	End of Sequence flag. This bit indicates whether the Control Write Sequencer should stop after executing this step. 0 = Not end of sequence 1 = End of sequence (Stop the sequencer after this step).	Control Write Sequencer
	11:8	WSEQ_DELAY [3:0]	0000	Time delay after executing this step. Total delay time per step (including execution)= 62.5µs × (2^WSEQ_DELAY + 8)	Control Write Sequencer
	7:0	WSEQ_DATA [7:0]	0000_0000	Data to be written in this sequence step. When the data width is less than 8 bits, then one or more of the MSBs of WSEQ_DATA are ignored. It is recommended that unused bits be set to 0.	Control Write Sequencer

Register 6Eh Write Sequencer 2

REGISTER ADDRESS	BIT	LABEL	DEFAULT	DESCRIPTION	REFER TO
R111 (6Fh) Write Sequencer 3	9	WSEQ_ABORT	0	Writing a 1 to this bit aborts the current sequence and returns control of the device back to the serial control interface.	Control Write Sequencer
	8	WSEQ_START	0	Writing a 1 to this bit starts the write sequencer at the memory location indicated by the WSEQ_START_INDEX field. The sequence continues until it reaches an “End of sequence” flag. At the end of the sequence, this bit will be reset by the Write Sequencer.	Control Write Sequencer
	5:0	WSEQ_START_INDEX [5:0]	00_0000	Sequence Start Index. This is the memory location of the first command in the selected sequence. 0 to 31 = RAM addresses 32 to 48 = ROM addresses 49 to 63 = Reserved	Control Write Sequencer

Register 6Fh Write Sequencer 3

REGISTER ADDRESS	BIT	LABEL	DEFAULT	DESCRIPTION	REFER TO
R112 (70h) Write Sequencer 4	9:4	WSEQ_CURRENT_INDEX [5:0]	00_0000	Sequence Current Index (read only): This is the location of the most recently accessed command in the write sequencer memory.	Control Write Sequencer
	0	WSEQ_BUSY	0	Sequencer Busy flag (read only): 0 = Sequencer idle 1 = Sequencer busy Note: it is not possible to write to control registers via the control interface while the Sequencer is Busy.	Control Write Sequencer

Register 70h Write Sequencer 4

REGISTER ADDRESS	BIT	LABEL	DEFAULT	DESCRIPTION	REFER TO
R116 (74h) FLL Control 1	2	FLL_FRACN_ENA	0	FLL Fractional enable 0 = Integer Mode 1 = Fractional Mode Fractional Mode (FLL_FRACN_ENA=1) is recommended in all cases	Frequency Locked Loop (FLL)
	1	FLL_OSC_ENA	0	FLL Oscillator enable 0 = Disabled 1 = Enabled FLL_OSC_ENA must be enabled before enabling FLL_ENA. Note that this field is required for free-running FLL modes only.	Frequency Locked Loop (FLL)
	0	FLL_ENA	0	FLL Enable 0 = Disabled 1 = Enabled FLL_OSC_ENA must be enabled before enabling FLL_ENA.	Frequency Locked Loop (FLL)

Register 74h FLL Control 1

REGISTER ADDRESS	BIT	LABEL	DEFAULT	DESCRIPTION	REFER TO
R117 (75h) FLL Control 2	13:8	FLL_OUTDIV [5:0]	00_0000	FLL FOUT clock divider 00_0000 = Reserved 00_0001 = Reserved 00_0010 = Reserved 00_0011 = 4 00_0100 = 5 00_0101 = 6 … 11_1110 = 63 11_1111 = 64 (FOUT = FVCO / FLL_OUTDIV)	Frequency Locked Loop (FLL)
	6:4	FLL_CTRL_RATE [2:0]	000	Frequency of the FLL control block 000 = FVCO / 1 (Recommended value) 001 = FVCO / 2 010 = FVCO / 3 011 = FVCO / 4 100 = FVCO / 5 101 = FVCO / 6 110 = FVCO / 7 111 = FVCO / 8 Recommended that these are not changed from default.	Frequency Locked Loop (FLL)
	2:0	FLL_FRATIO [2:0]	111	F_{VCO} clock divider 000 = divide by 1 001 = divide by 2 010 = divide by 4 011 = divide by 8 1XX = divide by 16	Frequency Locked Loop (FLL)

REGISTER ADDRESS	BIT	LABEL	DEFAULT	DESCRIPTION	REFER TO
				000 recommended for F_{REF} > 1MHz 100 recommended for F_{REF} < 64kHz	

Register 75h FLL Control 2

REGISTER ADDRESS	BIT	LABEL	DEFAULT	DESCRIPTION	REFER TO
R118 (76h) FLL Control 3	15:0	FLL_K [15:0]	0000_0000_0000_0000	Fractional multiply for FREF (MSB = 0.5)	Frequency Locked Loop (FLL)

Register 76h FLL Control 3

REGISTER ADDRESS	BIT	LABEL	DEFAULT	DESCRIPTION	REFER TO
R119 (77h) FLL Control 4	14:5	FLL_N [9:0]	01_0111_0111	Integer multiply for FREF (LSB = 1)	Frequency Locked Loop (FLL)
	3:0	FLL_GAIN [3:0]	0000	FLL Gain applied to error 0000 = x 1 (Recommended value) 0001 = x 2 0010 = x 4 0011 = x 8 0100 = x 16 0101 = x 32 0110 = x 64 0111 = x 128 1000 = x 256 Recommended that these are not changed from default.	Frequency Locked Loop (FLL)

Register 77h FLL Control 4

REGISTER ADDRESS	BIT	LABEL	DEFAULT	DESCRIPTION	REFER TO
R120 (78h) FLL Control 5	4:3	FLL_CLK_REF_DIV [1:0]	00	FLL Clock Reference Divider 00 = MCLK / 1 01 = MCLK / 2 10 = MCLK / 4 11 = MCLK / 8 MCLK (or other input reference) must be divided down to <=13.5MHz. For lower power operation, the reference clock can be divided down further if desired.	Frequency Locked Loop (FLL)
	1:0	FLL_CLK_REF_SRC [1:0]	00	FLL Clock source 00 = MCLK 01 = BCLK 10 = LRCLK 11 = Reserved	Frequency Locked Loop (FLL)

Register 78h FLL Control 5

REGISTER ADDRESS	BIT	LABEL	DEFAULT	DESCRIPTION	REFER TO
R121 (79h) GPIO Control 1	5	GPIO1_PU	0	GPIO1 pull-up resistor enable 0 = pull-up disabled 1 = pull-up enabled	General Purpose Input/Output (GPIO)
	4	GPIO1_PD	1	GPIO1 pull-down resistor enable 0 = pull-down disabled 1 = pull-down enabled	General Purpose Input/Output (GPIO)
	3:0	GPIO1_SEL [3:0]	0100	GPIO1 Function Select 0000 = Input pin 0001 = Clock output (f=SYSCLK/OPCLKDIV) 0010 = Logic '0' 0011 = Logic '1' 0100 = IRQ (default) 0101 = FLL Lock 0110 = Mic Detect 0111 = Mic Short 1000 = DMIC clock out 1001 = FLL Clock Output 1010 to 1111 = Reserved	General Purpose Input/Output (GPIO)

Register 79h GPIO Control 1

REGISTER ADDRESS	BIT	LABEL	DEFAULT	DESCRIPTION	REFER TO
R122 (7Ah) GPIO Control 2	5	GPIO2_PU	0	GPIO2 pull-up resistor enable 0 = pull-up disabled 1 = pull-up enabled	General Purpose Input/Output (GPIO)
	4	GPIO2_PD	1	GPIO2 pull-down resistor enable 0 = pull-down disabled 1 = pull-down enabled	General Purpose Input/Output (GPIO)
	3:0	GPIO2_SEL [3:0]	0000	GPIO2 Function Select 0000 = Input pin (default) 0001 = Clock output (f=SYSCLK/OPCLKDIV) 0010 = Logic '0' 0011 = Logic '1' 0100 = IRQ 0101 = FLL Lock 0110 = Mic Detect 0111 = Mic Short 1000 = DMIC clock out 1001 = FLL Clock Output 1010 to 1111 = Reserved	General Purpose Input/Output (GPIO)

Register 7Ah GPIO Control 2

REGISTER ADDRESS	BIT	LABEL	DEFAULT	DESCRIPTION	REFER TO
R123 (7Bh) GPIO Control 3	5	GPIO3_PU	0	GPIO3 pull-up resistor enable 0 = pull-up disabled 1 = pull-up enabled	General Purpose Input/Output (GPIO)
	4	GPIO3_PD	1	GPIO3 pull-down resistor enable 0 = pull-down disabled 1 = pull-down enabled	General Purpose Input/Output (GPIO)
	3:0	GPIO3_SEL [3:0]	0000	GPIO3 Function Select 0000 = Input pin (default) 0001 = Clock output (f=SYSCLK/OPCLKDIV) 0010 = Logic '0' 0011 = Logic '1' 0100 = IRQ 0101 = FLL Lock 0110 = Mic Detect 0111 = Mic Short 1000 = DMIC clock out 1001 = FLL Clock Output 1010 to 1111 = Reserved	General Purpose Input/Output (GPIO)

Register 7Bh GPIO Control 3

REGISTER ADDRESS	BIT	LABEL	DEFAULT	DESCRIPTION	REFER TO
R124 (7Ch) GPIO Control 4	9	GPI7_ENA	0	GPI7 input enable 0 = disabled 1 = enabled	General Purpose Input/Output (GPIO)
	8	GPI8_ENA	0	GPI8 input enable 0 = disabled 1 = enabled	General Purpose Input/Output (GPIO)
	7	GPIO_BCLK_MODE_ENA	0	Selects BCLK/GPIO4 pin function 0 = BCLK/GPIO4 is used as BCLK 1 = BCLK/GPIO4 is used as GPIO. MCLK provides the BCLK in the AIF in this mode.	General Purpose Input/Output (GPIO)
	3:0	GPIO_BCLK_SEL [3:0]	0000	GPIO_BCLK function select: 0000 = Input Pin (default) 0001 = Clock output (f=SYSCLK/OPCLKDIV) 0010 = Logic '0' 0011 = Logic '1' 0100 = IRQ 0101 = FLL Lock 0110 = Mic Detect 0111 = Mic Short 1000 = DMIC clock out 1001 = FLL Clock Output 1010 to 1111 = Reserved	General Purpose Input/Output (GPIO)

Register 7Ch GPIO Control 4

REGISTER ADDRESS	BIT	LABEL	DEFAULT	DESCRIPTION	REFER TO
R126 (7Eh) Digital Pulls	7	MCLK_PU	0	MCLK pull-up resistor enable 0 = pull-up disabled 1 = pull-up enabled	Digital Audio Interface Control
	6	MCLK_PD	0	MCLK pull-down resistor enable 0 = pull-down disabled 1 = pull-down enabled	Digital Audio Interface Control
	5	DACDAT_PU	0	DACDAT pull-up resistor enable 0 = pull-up disabled 1 = pull-up enabled	Digital Audio Interface Control
	4	DACDAT_PD	0	DACDAT pull-down resistor enable 0 = pull-down disabled 1 = pull-down enabled	Digital Audio Interface Control
	3	LRCLK_PU	0	LRCLK pull-up resistor enable 0 = pull-up disabled 1 = pull-up enabled	Digital Audio Interface Control
	2	LRCLK_PD	0	LRCLK pull-down resistor enable 0 = pull-down disabled 1 = pull-down enabled	Digital Audio Interface Control
	1	BCLK_PU	0	BCLK pull-up resistor enable 0 = pull-up disabled 1 = pull-up enabled	Digital Audio Interface Control
	0	BCLK_PD	0	BCLK pull-down resistor enable 0 = pull-down disabled 1 = pull-down enabled	Digital Audio Interface Control

Register 7Eh Digital Pulls

REGISTER ADDRESS	BIT	LABEL	DEFAULT	DESCRIPTION	REFER TO
R127 (7Fh) Interrupt Status	10	IRQ	0	Logical OR of all other interrupt flags	Interrupts
	9	GPIO_BCLK_EINT	0	GPIO4 interrupt 0 = interrupt not set 1 = interrupt is set Cleared when a '1' is written	Interrupts
	8	WSEQ_EINT	0	Write Sequence interrupt 0 = interrupt not set 1 = interrupt is set Cleared when a '1' is written. Note that the read value of WSEQ_EINT is not valid whilst the Write Sequencer is Busy	Interrupts
	7	GPIO3_EINT	0	GPIO3 interrupt 0 = interrupt not set 1 = interrupt is set Cleared when a '1' is written	Interrupts
	6	GPIO2_EINT	0	GPIO2 interrupt 0 = interrupt not set 1 = interrupt is set Cleared when a '1' is written	Interrupts
	5	GPIO1_EINT	0	GPIO1 interrupt 0 = interrupt not set 1 = interrupt is set Cleared when a '1' is written	Interrupts

REGISTER ADDRESS	BIT	LABEL	DEFAULT	DESCRIPTION	REFER TO
	4	GPI8_EINT	0	GPI8 interrupt 0 = interrupt not set 1 = interrupt is set Cleared when a '1' is written	Interrupts
	3	GPI7_EINT	0	GPI7 interrupt 0 = interrupt not set 1 = interrupt is set Cleared when a '1' is written	Interrupts
	2	FLL_LOCK_EINT	0	FLL Lock interrupt 0 = interrupt not set 1 = interrupt is set Cleared when a '1' is written	Interrupts
	1	MIC_SHRT_EINT	0	MICBIAS short circuit interrupt 0 = interrupt not set 1 = interrupt is set Cleared when a '1' is written	Interrupts
	0	MIC_DET_EINT	0	MICBIAS current detect interrupt 0 = interrupt not set 1 = interrupt is set Cleared when a '1' is written	Interrupts

Register 7Fh Interrupt Status

REGISTER ADDRESS	BIT	LABEL	DEFAULT	DESCRIPTION	REFER TO
R128 (80h) Interrupt Status Mask	9	IM_GPIO_BCLK_EINT	1	GPIO4 interrupt mask 0 = do not mask interrupt 1 = mask interrupt	Interrupts
	8	IM_WSEQ_EINT	1	Write sequencer interrupt mask 0 = do not mask interrupt 1 = mask interrupt	Interrupts
	7	IM_GPIO3_EINT	1	GPIO3 interrupt mask 0 = do not mask interrupt 1 = mask interrupt	Interrupts
	6	IM_GPIO2_EINT	1	GPIO2 interrupt mask 0 = do not mask interrupt 1 = mask interrupt	Interrupts
	5	IM_GPIO1_EINT	1	GPIO1 interrupt mask 0 = do not mask interrupt 1 = mask interrupt	Interrupts
	4	IM_GPI8_EINT	1	GPI8 interrupt mask 0 = do not mask interrupt 1 = mask interrupt	Interrupts
	3	IM_GPI7_EINT	1	GPI7 interrupt mask 0 = do not mask interrupt 1 = mask interrupt	Interrupts
	2	IM_FLL_LOCK_EINT	1	FLL Lock interrupt mask 0 = do not mask interrupt 1 = mask interrupt	Interrupts
	1	IM_MIC_SHRT_EINT	1	MICBIAS short circuit interrupt mask 0 = do not mask interrupt 1 = mask interrupt	Interrupts
	0	IM_MIC_DET_EINT	1	MICBIAS current detect interrupt mask	Interrupts

REGISTER ADDRESS	BIT	LABEL	DEFAULT	DESCRIPTION	REFER TO
				0 = do not mask interrupt 1 = mask interrupt	

Register 80h Interrupt Status Mask

REGISTER ADDRESS	BIT	LABEL	DEFAULT	DESCRIPTION	REFER TO
R129 (81h) Interrupt Polarity	9	GPIO_BCLK_EINT_POL	0	GPIO4 interrupt polarity 0 = active high 1 = active low	Interrupts
	8	WSEQ_EINT_POL	0	Write Sequencer interrupt polarity 0 = active high (interrupt is triggered when WSEQ is busy) 1 = active low (interrupt is triggered when WSEQ is idle)	Interrupts
	7	GPIO3_EINT_POL	0	GPIO3 interrupt polarity 0 = active high 1 = active low	Interrupts
	6	GPIO2_EINT_POL	0	GPIO2 interrupt polarity 0 = active high 1 = active low	Interrupts
	5	GPIO1_EINT_POL	0	GPIO1 interrupt polarity 0 = active high 1 = active low	Interrupts
	4	GPI8_EINT_POL	0	GPI8 interrupt polarity 0 = active high 1 = active low	Interrupts
	3	GPI7_EINT_POL	0	GPI7 interrupt polarity 0 = active high 1 = active low	Interrupts
	2	FLL_LOCK_EINT_POL	0	FLL Lock interrupt polarity 0 = active high (interrupt is triggered when FLL Lock is reached) 1 = active low (interrupt is triggered when FLL is not locked)	Interrupts
	1	MIC_SHRT_EINT_POL	0	MICBIAS short circuit interrupt polarity 0 = active high 1 = active low	Interrupts
	0	MIC_DET_EINT_POL	0	MICBIAS current detect interrupt polarity 0 = active high 1 = active low	Interrupts

Register 81h Interrupt Polarity

REGISTER ADDRESS	BIT	LABEL	DEFAULT	DESCRIPTION	REFER TO
R130 (82h) Interrupt Debounce	9	GPIO_BCLK_EINT_DB	0	GPIO4 interrupt debounce 0 = disabled 1 = enabled	Interrupts
	8	WSEQ_EINT_DB	0	Write Sequencer interrupt debounce enable 0 = disabled 1 = enabled	Interrupts
	7	GPIO3_EINT_DB	0	GPIO3 input debounce 0 = disabled 1 = enabled	Interrupts
	6	GPIO2_EINT_DB	0	GPIO2 input debounce 0 = disabled 1 = enabled	Interrupts
	5	GPIO1_EINT_DB	0	GPIO1 input debounce 0 = disabled 1 = enabled	Interrupts
	4	GPI8_EINT_DB	0	GPI8 input debounce 0 = disabled 1 = enabled	Interrupts
	3	GPI7_EINT_DB	0	GPI7 input debounce 0 = disabled 1 = enabled	Interrupts
	2	FLL_LOCK_EINT_DB	0	FLL Lock debounce 0 = disabled 1 = enabled	Interrupts
	1	MIC_SHRT_EINT_DB	0	MICBIAS short circuit interrupt debounce 0 = disabled 1 = enabled	Interrupts
	0	MIC_DET_EINT_DB	0	MICBIAS current detect interrupt debounce 0 = disabled 1 = enabled	Interrupts

Register 82h Interrupt Debounce

REGISTER ADDRESS	BIT	LABEL	DEFAULT	DESCRIPTION	REFER TO
R134 (86h) EQ1	0	EQ_ENA	0	EQ enable 0 = EQ disabled 1 = EQ enabled	ReTune™ Mobile Parametric Equalizer (EQ)

Register 86h EQ1

REGISTER ADDRESS	BIT	LABEL	DEFAULT	DESCRIPTION	REFER TO
R135 (87h) EQ2	4:0	EQ_B1_GAIN [4:0]	0_1100	Gain for EQ band 1 00000 = -12dB 00001 = -11dB (… 1dB steps) 01100 = 0dB (… 1dB steps) 11000 = +12dB 11001 to 11111 = reserved	ReTune™ Mobile Parametric Equalizer (EQ)

Register 87h EQ2

REGISTER ADDRESS	BIT	LABEL	DEFAULT	DESCRIPTION	REFER TO
R136 (88h) EQ3	4:0	EQ_B2_GAIN [4:0]	0_1100	Gain for EQ band 2 00000 = -12dB 00001 = -11dB (… 1dB steps) 01100 = 0dB (… 1dB steps) 11000 = +12dB 11001 to 11111 = reserved	ReTune™ Mobile Parametric Equalizer (EQ)

Register 88h EQ3

REGISTER ADDRESS	BIT	LABEL	DEFAULT	DESCRIPTION	REFER TO
R137 (89h) EQ4	4:0	EQ_B3_GAIN [4:0]	0_1100	Gain for EQ band 3 00000 = -12dB 00001 = -11dB (… 1dB steps) 01100 = 0dB (… 1dB steps) 11000 = +12dB 11001 to 11111 = reserved	ReTune™ Mobile Parametric Equalizer (EQ)

Register 89h EQ4

REGISTER ADDRESS	BIT	LABEL	DEFAULT	DESCRIPTION	REFER TO
R138 (8Ah) EQ5	4:0	EQ_B4_GAIN [4:0]	0_1100	Gain for EQ band 4 00000 = -12dB 00001 = -11dB (… 1dB steps) 01100 = 0dB (… 1dB steps) 11000 = +12dB 11001 to 11111 = reserved	ReTune™ Mobile Parametric Equalizer (EQ)

Register 8Ah EQ5

REGISTER ADDRESS	BIT	LABEL	DEFAULT	DESCRIPTION	REFER TO
R139 (8Bh) EQ6	4:0	EQ_B5_GAIN [4:0]	0_1100	Gain for EQ band5 00000 = -12dB 00001 = -11dB (… 1dB steps) 01100 = 0dB (… 1dB steps) 11000 = +12dB 11001 to 11111 = reserved	ReTune™ Mobile Parametric Equalizer (EQ)

Register 8Bh EQ6

REGISTER ADDRESS	BIT	LABEL	DEFAULT	DESCRIPTION	REFER TO
R140 (8Ch) EQ7	15:0	EQ_B1_A [15:0]	0000_1111_1100_1010	EQ Band 1 Coefficient A	ReTune™ Mobile Parametric Equalizer (EQ)

Register 8Ch EQ7

REGISTER ADDRESS	BIT	LABEL	DEFAULT	DESCRIPTION	REFER TO
R141 (8Dh) EQ8	15:0	EQ_B1_B [15:0]	0000_0100_0000_0000	EQ Band 1 Coefficient B	ReTune™ Mobile Parametric Equalizer (EQ)

Register 8Dh EQ8

REGISTER ADDRESS	BIT	LABEL	DEFAULT	DESCRIPTION	REFER TO
R142 (8Eh) EQ9	15:0	EQ_B1_PG [15:0]	0000_0000_1101_1000	EQ Band 1 Coefficient PG	ReTune™ Mobile Parametric Equalizer (EQ)

Register 8Eh EQ9

REGISTER ADDRESS	BIT	LABEL	DEFAULT	DESCRIPTION	REFER TO
R143 (8Fh) EQ10	15:0	EQ_B2_A [15:0]	0001_1110_1011_0101	EQ Band 2 Coefficient A	ReTune™ Mobile Parametric Equalizer (EQ)

Register 8Fh EQ10

REGISTER ADDRESS	BIT	LABEL	DEFAULT	DESCRIPTION	REFER TO
R144 (90h) EQ11	15:0	EQ_B2_B [15:0]	1111_0001_0100_0101	EQ Band 2 Coefficient B	ReTune™ Mobile Parametric Equalizer (EQ)

Register 90h EQ11

REGISTER ADDRESS	BIT	LABEL	DEFAULT	DESCRIPTION	REFER TO
R145 (91h) EQ12	15:0	EQ_B2_C [15:0]	0000_1011_0111_0101	EQ Band 2 Coefficient C	ReTune™ Mobile Parametric Equalizer (EQ)

Register 91h EQ12

REGISTER ADDRESS	BIT	LABEL	DEFAULT	DESCRIPTION	REFER TO
R146 (92h) EQ13	15:0	EQ_B2_PG [15:0]	0000_0001_1100_0101	EQ Band 2 Coefficient PG	ReTune™ Mobile Parametric Equalizer (EQ)

Register 92h EQ13

REGISTER ADDRESS	BIT	LABEL	DEFAULT	DESCRIPTION	REFER TO
R147 (93h) EQ14	15:0	EQ_B3_A [15:0]	0001_1100_0101_1000	EQ Band 3 Coefficient A	ReTune™ Mobile Parametric Equalizer (EQ)

Register 93h EQ14

REGISTER ADDRESS	BIT	LABEL	DEFAULT	DESCRIPTION	REFER TO
R148 (94h) EQ15	15:0	EQ_B3_B [15:0]	1111_0011_0111_0011	EQ Band 3 Coefficient B	ReTune™ Mobile Parametric Equalizer (EQ)

Register 94h EQ15

REGISTER ADDRESS	BIT	LABEL	DEFAULT	DESCRIPTION	REFER TO
R149 (95h) EQ16	15:0	EQ_B3_C [15:0]	0000_1010_0101_0100	EQ Band 3 Coefficient C	ReTune™ Mobile Parametric Equalizer (EQ)

Register 95h EQ16

REGISTER ADDRESS	BIT	LABEL	DEFAULT	DESCRIPTION	REFER TO
R150 (96h) EQ17	15:0	EQ_B3_PG [15:0]	0000_0101_0101_1000	EQ Band 3 Coefficient PG	ReTune™ Mobile Parametric Equalizer (EQ)

Register 96h EQ17

REGISTER ADDRESS	BIT	LABEL	DEFAULT	DESCRIPTION	REFER TO
R151 (97h) EQ18	15:0	EQ_B4_A [15:0]	0001_0110_1000_1110	EQ Band 4 Coefficient A	ReTune™ Mobile Parametric Equalizer (EQ)

Register 97h EQ18

REGISTER ADDRESS	BIT	LABEL	DEFAULT	DESCRIPTION	REFER TO
R152 (98h) EQ19	15:0	EQ_B4_B [15:0]	1111_1000_0010_1001	EQ Band 4 Coefficient B	ReTune™ Mobile Parametric Equalizer (EQ)

Register 98h EQ19

REGISTER ADDRESS	BIT	LABEL	DEFAULT	DESCRIPTION	REFER TO
R153 (99h) EQ20	15:0	EQ_B4_C [15:0]	0000_0111_1010_1101	EQ Band 4 Coefficient C	ReTune™ Mobile Parametric Equalizer (EQ)

Register 99h EQ20

REGISTER ADDRESS	BIT	LABEL	DEFAULT	DESCRIPTION	REFER TO
R154 (9Ah) EQ21	15:0	EQ_B4_PG [15:0]	0001_0001_0000_0011	EQ Band 4 Coefficient PG	ReTune™ Mobile Parametric Equalizer (EQ)

Register 9Ah EQ21

REGISTER ADDRESS	BIT	LABEL	DEFAULT	DESCRIPTION	REFER TO
R155 (9Bh) EQ22	15:0	EQ_B5_A [15:0]	0000_0101_0110_0100	EQ Band 5 Coefficient A	ReTune™ Mobile Parametric Equalizer (EQ)

Register 9Bh EQ22

REGISTER ADDRESS	BIT	LABEL	DEFAULT	DESCRIPTION	REFER TO
R156 (9Ch) EQ23	15:0	EQ_B5_B [15:0]	0000_0101_01 01_1001	EQ Band 1 Coefficient B	ReTune™ Mobile Parametric Equalizer (EQ)

Register 9Ch EQ23

REGISTER ADDRESS	BIT	LABEL	DEFAULT	DESCRIPTION	REFER TO
R157 (9Dh) EQ24	15:0	EQ_B5_PG [15:0]	0100_0000_00 00_0000	EQ Band 5 Coefficient PG	ReTune™ Mobile Parametric Equalizer (EQ)

Register 9Dh EQ24

REGISTER ADDRESS	BIT	LABEL	DEFAULT	DESCRIPTION	REFER TO
R198 (C6h) ADC Test 0	2	ADC_128_OSR _TST_MODE	0	ADC Bias Control (1) Set this bit to 1 in ADC 64fs mode (ADC_OSR128 = 0). Set this bit to 0 in ADC 128fs mode (ADC_OSR128 = 1).	ADC Oversampling Ratio (OSR)
	0	ADC_BIASX1P5	0	ADC Bias Control (2) Set this bit to 1 in ADC 64fs mode (ADC_OSR128 = 0). Set this bit to 0 in ADC 128fs mode (ADC_OSR128 = 1).	ADC Oversampling Ratio (OSR)

Register C6h ADC Test 0

REGISTER ADDRESS	BIT	LABEL	DEFAULT	DESCRIPTION	REFER TO
R247 (F7h) FLL NCO Test 0	0	FLL_FRC_NCO	0	FLL Forced control select 0 = Normal 1 = FLL oscillator controlled by FLL_FRC_NCO_VAL (Note that this field is required for free-running FLL modes only)	Frequency Locked Loop (FLL)

Register F7h FLL NCO Test 0

REGISTER ADDRESS	BIT	LABEL	DEFAULT	DESCRIPTION	REFER TO
R248 (F8h) FLL NCO Test 1	5:0	FLL_FRC_NCO _VAL [5:0]	01_1001	FLL Forced oscillator value Valid range is 000000 to 111111 0x19h (011001) = 12MHz approx (Note that this field is required for free-running FLL modes only)	Frequency Locked Loop (FLL)

Register F8h FLL NCO Test 1

APPLICATIONS INFORMATION

RECOMMENDED EXTERNAL COMPONENTS

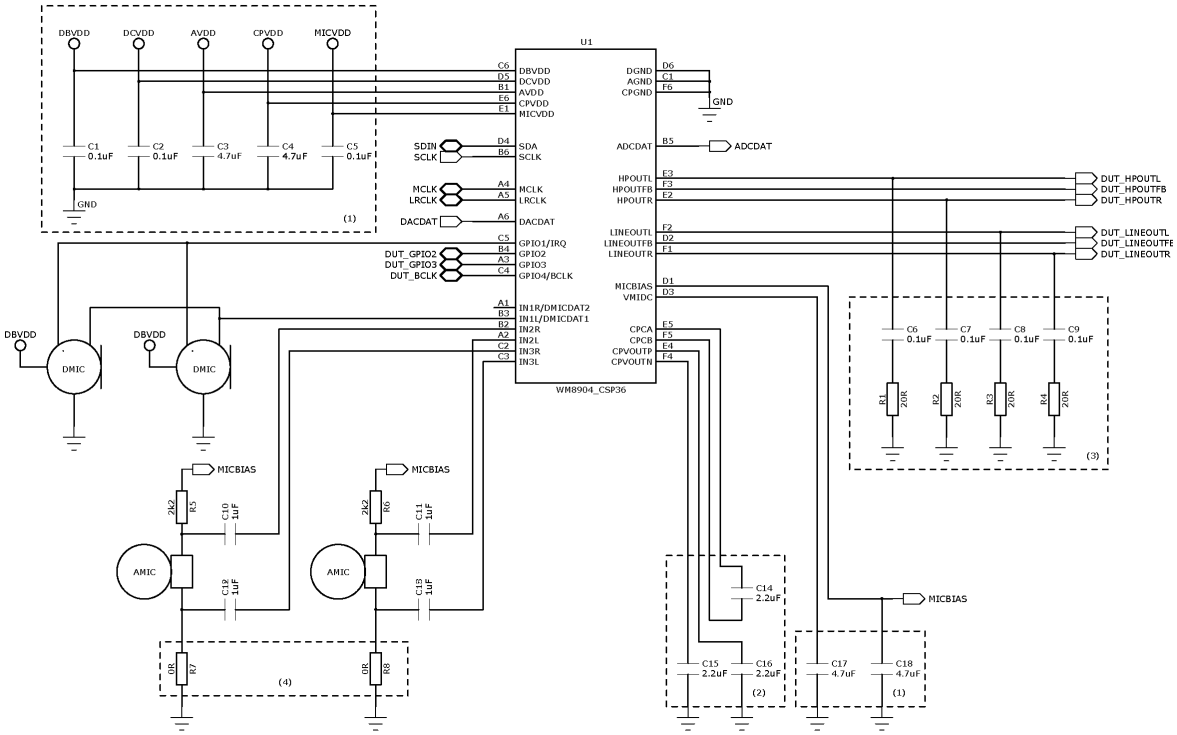

Figure 71 Recommended External Components

Notes:

1. **Decoupling Capacitors**

   X5R ceramic capacitor is recommended for capacitors C1, C2, C3, C4, C5, C15, C16, C17 and C18.

   The positioning of C17 and C18 is very important - these should be as close to the WM8904 as possible.

   Capacitors C15 and C16 should also be positioned as close to the WM8904 as possible.

2. **Charge Pump Capacitors**

   Specific recommendations for C14, C15 and C16 are provided in Table 95. Note that two different recommendations are provided for C15 and C16; either of these components is suitable, depending upon size requirements and availability.

   The positioning of C14 is very important - this should be as close to the WM8904 as possible.

   It is important to select a suitable capacitor type for the Charge Pump. Note that the capacitance may vary with DC voltage; care is required to ensure that required capacitance is achieved at the applicable operating voltage, as specified in Table 95. The capacitor datasheet should be consulted for this information.

COMPONENT	REQUIRED CAPACITANCE	VALUE	PART NUMBER	VOLTAGE	TYPE	SIZE
C14 (CPCA-CPCB)	≥ 1µF at 2VDC	2.2µF	Kemet C0402C225M9PAC	6.3v	X5R	0402
C15 (CPVOUTN) C16 (CPVOUTP)	≥ 2µF at 2VDC	2.2µF	MuRata GRM188R61A225KE34D	10v	X5R	0603
		4.7µF	MuRata GRM155R60J475M_EIA	6.3v	X5R	0402

Table 95 Charge Pump Capacitors

3. Zobel Networks

The Zobel network shown in Figure 71 is required on HPOUTL, HPOUTR, LINEOUTL and LINEOUTR whenever that output is enabled. Stability of these ground-referenced outputs across all process corners cannot be guaranteed without the Zobel network components. (Note that, if any ground-referenced output pin is not required, the zobel network components can be omitted from the output pin, and the pin can be left floating.) The Zobel network requirement is detailed further in the applications note WAN_0212 “Class W Headphone Impedance Compensation”.

Zobel networks (C6, C7, C8, C9, R1, R2, R3, R4) should be positioned reasonably close to the WM8904.

4. Microphone Grounding

R7 and R8 can be populated with other values to remove common mode noise on the microphone if required.

MIC DETECTION SEQUENCE USING MICBIAS CURRENT

This section details an example sequence which summarises how the host processor can configure and detect the events supported by the MICBIAS current detect function (see "Electret Condenser Microphone Interface"):

- Mic insertion/removal
- Hook switch press/release

Figure 72 shows an example of how the MICBIAS current flow varies versus time, during mic insertion and hook switch events. The Y axis is annotated with the Mic detection thresholds, and the X axis is annotated with the stages of an example sequence as detailed in Table 96, to illustrate how the host processor can implement mic insertion and hook switch detection.

The sequence assumes that the microphone insertion and hook switch detection functions are monitored by polling the interrupt flags using the control interface. Note that the maximum mechanical bounce times for mic insertion and removal must be fully understood by the software programmer.

A GPIO pin could be used as an alternative mechanism to monitor the MICBIAS detection functions. This enables the host processor to detect mechanical bounce at any time.

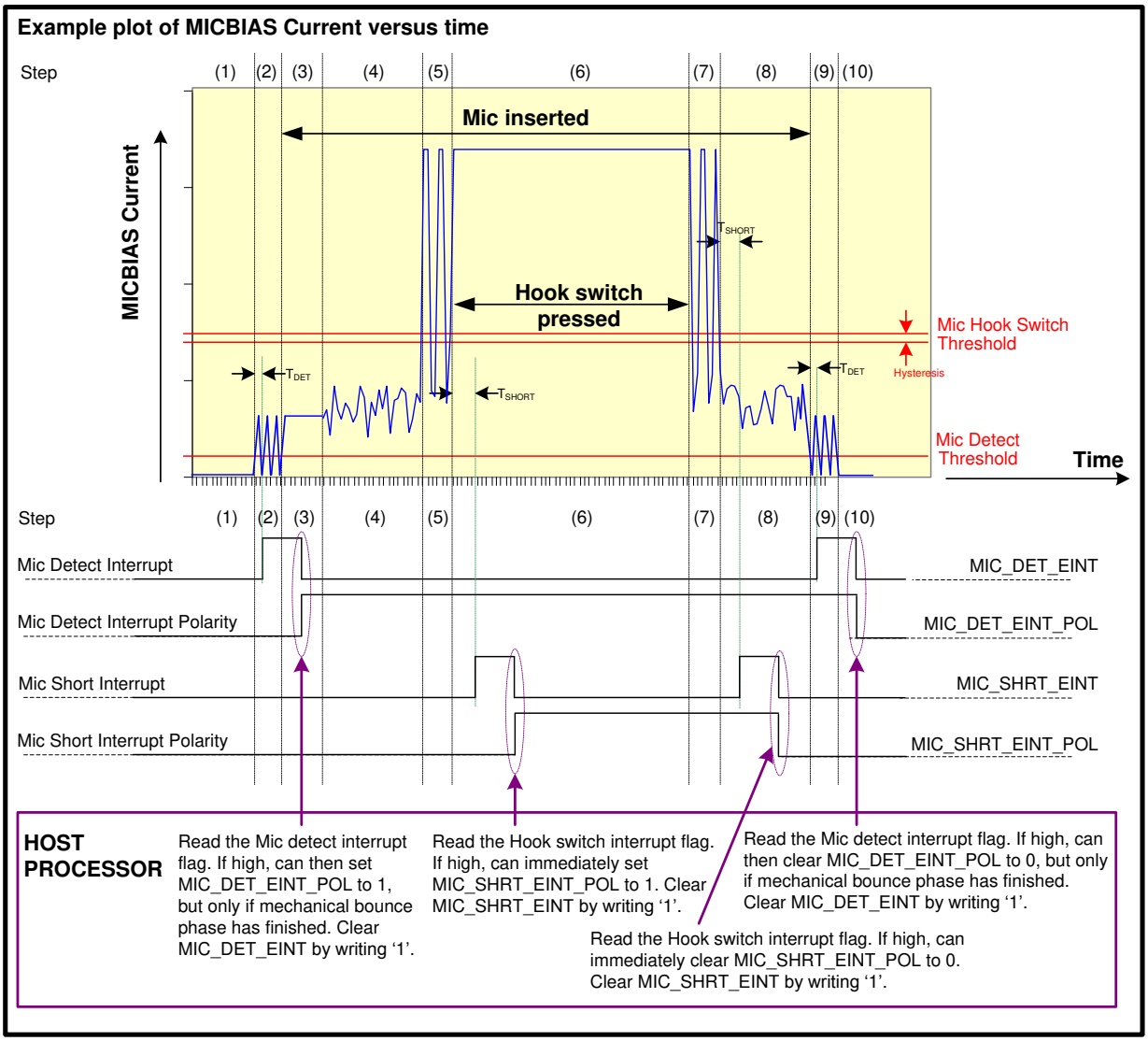

Figure 72 Mic Insert and Hook Switch Detect: Example MICBIAS Current Plot

STEP	DETAILS
1	Mic not inserted. To detect mic insertion, Host processor must initialise interrupts and clear MIC_DET_EINT_POL = 0. At every step, the host processor should poll the interrupt status register. Note that Mic Insertion de-bounce circuitry can be enabled by setting MIC_DET_EINT_DB = 1.
2	Mechanical bounce of jack socket during Mic insertion. Host processor may already detect a mic insertion interrupt (MIC_DET_EINT) during this step. Once detected, the host processor can set MIC_DET_EINT_POL = 1 and then clear the interrupt, unless mechanical bounce can last longer than the shortest possible T_{DET}, in which case the host processor should wait until step 3.
3	Mic fully inserted. If not already set, the host processor must now set MIC_DET_EINT_POL = 1. If not already cleared, the host processor must now clear the MIC_DET_EINT interrupt. To detect Hook switch press, the host processor must clear MIC_SHRT_EINT_POL = 0. At this step, the diagram shows no AC current swing, due to a very low ambient noise level.
4	Mic fully inserted. Diagram shows AC current swing due to high levels of background noise (such as wind).
5	Mechanical bounce during hook switch press. The hook switch interrupt is unlikely to be set during this step, because 10 successive samples of the MICBIAS current exceeding the hook switch threshold have not yet been sampled. Note that Hook Switch de-bounce circuitry can be enabled by setting MIC_SHRT_EINT_DB = 1.
6	Hook switch is fully pressed down. After T_{SHORT}, 10 successive samples of the MICBIAS current exceeding the hook switch threshold have been detected, hence a hook switch interrupt (MIC_SHRT_EINT) will be generated. Once detected, the host processor can immediately set MIC_SHRT_EINT_POL = 1 and then clear the MIC_SHRT_EINT interrupt.
7	Mechanical bounce during hook switch release. The hook switch interrupt is unlikely to be set during this step, because 10 successive samples of the MICBIAS current lower than the hook switch threshold have not yet been sampled.
8	Hook switch fully released. After T_{SHORT}, 10 successive samples of the MICBIAS current lower than the hook switch threshold have been detected, hence a hook switch interrupt (MIC_SHRT_EINT) will be generated. Once detected, the host processor can immediately clear MIC_SHRT_EINT_POL = 0 and then clear the MIC_SHRT_EINT interrupt.
9	Mechanical bounce of jack socket during Mic removal. Host processor may already detect a mic removal interrupt (MIC_DET_EINT) during this step. Once detected, the host processor can clear MIC_DET_EINT_POL = 0 and then clear the interrupt, unless mechanical bounce can last longer than the shortest possible T_{DET}, in which case the host processor should wait until step 10.
10	Mic fully removed. If not already cleared, the host processor must now clear MIC_DET_EINT_POL = 0. If not already cleared, the host processor must now clear the MIC_DET_EINT interrupt.

Table 96 Mic Insert and Hook Switch Detect: Example Sequence

Alternatively, utilising a GPIO pin to monitor the MICBIAS current detect functionality permits the host processor to monitor the steady state of microphone detection or hook switch press functions. Because the GPIO shows the steady state condition, software de-bounce may be easier to implement in the host processor, dependant on the processor performance characteristics, hence use of the GPIO is likely to simplify the rejection of mechanical bounce. Changes of state in the GPIO pin are also subject to the time delays t_{DET} and t_{SHORT}.

PACKAGE DIMENSIONS

The 36-ball W-CSP package drawing is shown below.

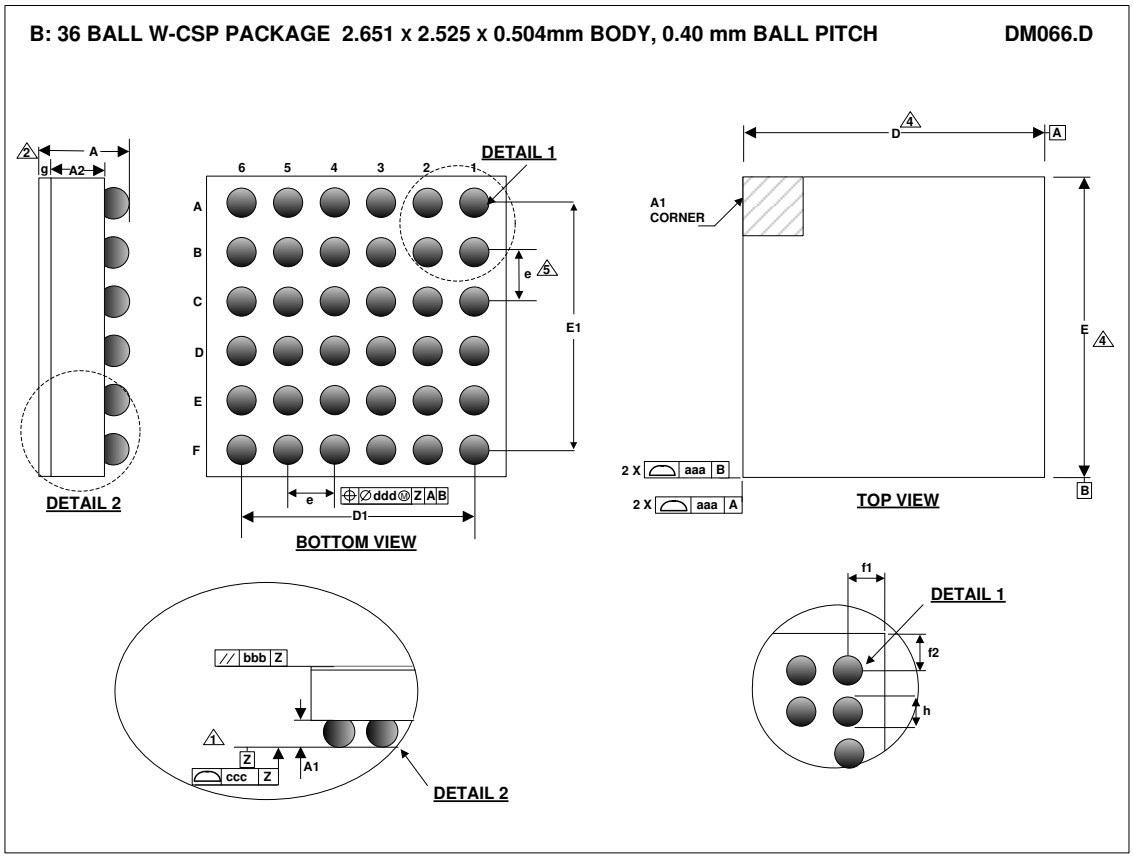

Symbols	Dimensions (mm)			
	MIN	NOM	MAX	NOTE
A	0.470	0.504	0.538	
A1	0.172	0.202	0.232	
A2	0.265	0.280	0.295	
D	2.621	2.651	2.681	
D1		2.000 BSC		
E	2.495	2.525	2.555	
E1		2.000 BSC		
e		0.400 BSC		5
f1		0.326 BSC		
f2		0.263 BSC		
g	0.019	0.022	0.025	
h	0.222	0.262	0.302	
aaa		0.025		
bbb		0.060		
ccc		0.030		
ddd		0.015		

NOTES:
1. PRIMARY DATUM -Z- AND SEATING PLANE ARE DEFINED BY THE SPHERICAL CROWNS OF THE SOLDER BALLS.
2. THIS DIMENSION INCLUDES STAND-OFF HEIGHT 'A1' AND BACKSIDE COATING.
3. A1 CORNER IS IDENTIFIED BY INK/LASER MARK ON TOP PACKAGE.
4. BILATERAL TOLERANCE ZONE IS APPLIED TO EACH SIDE OF THE PACKAGE BODY.
5. 'e' REPRESENTS THE BASIC SOLDER BALL GRID PITCH.
6. THIS DRAWING IS SUBJECT TO CHANGE WITHOUT NOTICE.
7. FOLLOWS JEDEC DESIGN GUIDE MO-211-C.

The 32-pin QFN package drawing is shown below.

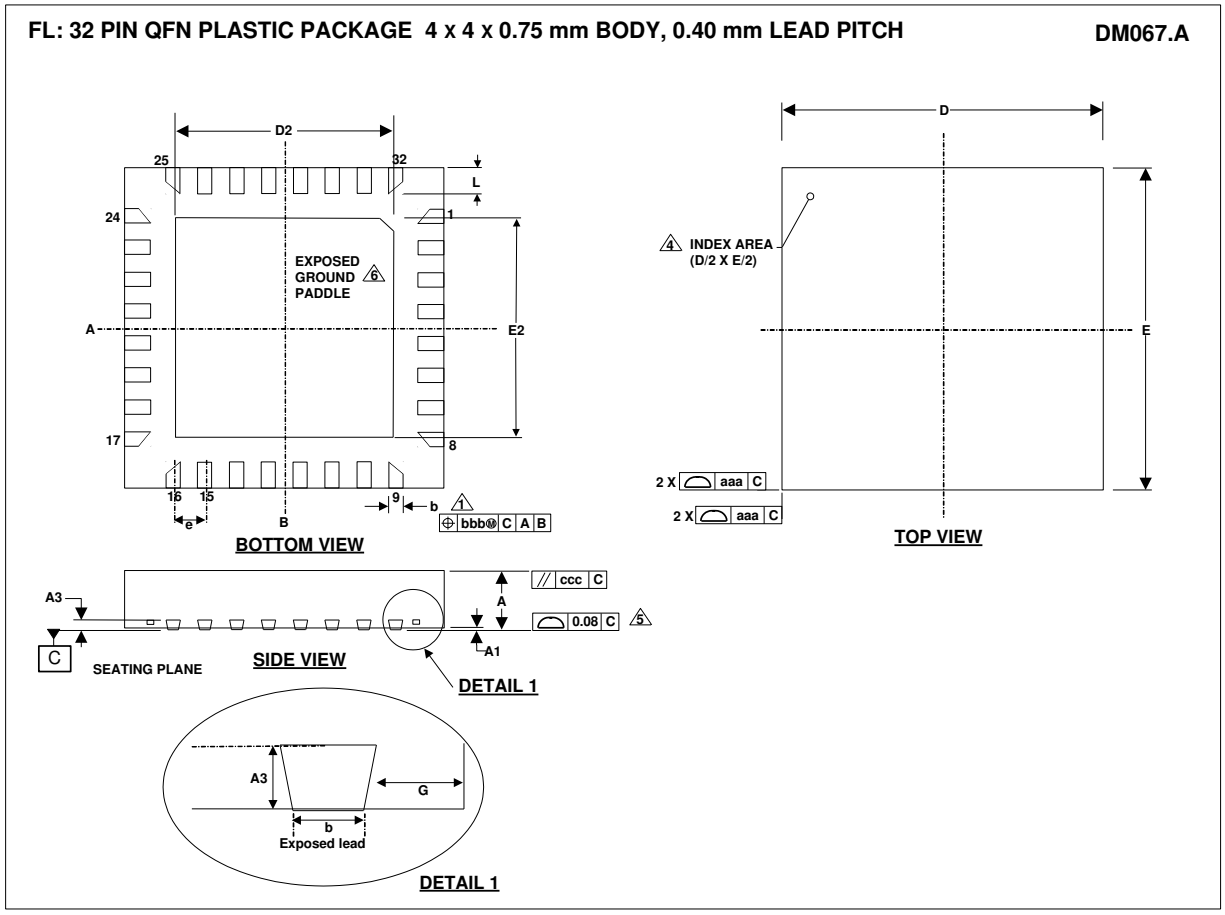

Symbols		Dimensions (mm)		
	MIN	NOM	MAX	NOTE
A	0.70	0.75	0.8	
A1	0	0.035	0.05	
A3		0.203 REF		
b	0.15	0.2	0.25	1
D		4.00 BSC		
D2	2.65	2.7	2.75	2
E		4.00 BSC		
E2	2.65	2.7	2.75	2
e		0.40 BSC		
G		0.5		
L	0.35	0.40	0.45	
Tolerances of Form and Position				
aaa	0.05			
bbb	0.10			
ccc	0.10			
REF:				

NOTES:
1. DIMENSION b APPLIES TO METALLIZED TERMINAL AND IS MEASURED BETWEEN 0.15 mm AND 0.25 mm FROM TERMINAL TIP.
2. ALL DIMENSIONS ARE IN MILLIMETRES.
3. THE TERMINAL #1 IDENTIFIER AND TERMINAL NUMBERING CONVENTION SHALL CONFORM TO JEDEC 95-1 SPP-002.
4. COPLANARITY APPLIES TO THE EXPOSED HEAT SINK SLUG AS WELL AS THE TERMINALS.
5. REFER TO APPLICATION NOTE WAN_0118 FOR FURTHER INFORMATION REGARDING PCB FOOTPRINTS AND QFN PACKAGE SOLDERING.
6. THIS DRAWING IS SUBJECT TO CHANGE WITHOUT NOTICE.

IMPORTANT NOTICE

Contacting Cirrus Logic Support

For all product questions and inquiries, contact a Cirrus Logic Sales Representative.
To find one nearest you, go to www.cirrus.com.

"Pre-Production" product information describes products that are in production, but for which full characterization data is not yet available. For the purposes of our terms and conditions of sale, "Preliminary" or "Advanced" datasheets are non-final datasheets that include but are not limited to datasheets marked as "Target", "Advance", "Product Preview", "Preliminary Technical Data" and/or "Pre-production." Products provided with any such datasheet are therefore subject to relevant terms and conditions associated with "Preliminary" or "Advanced" designations. The products and services of Cirrus Logic International (UK) Limited; Cirrus Logic, Inc.; and other companies in the Cirrus Logic group (collectively either "Cirrus Logic" or "Cirrus") are sold subject to Cirrus Logic's terms and conditions of sale supplied at the time of order acknowledgment, including those pertaining to warranty, indemnification, and limitation of liability. Software is provided pursuant to applicable license terms. Cirrus Logic reserves the right to make changes to its products and specifications or to discontinue any product or service without notice. Customers should therefore obtain the latest version of relevant information from Cirrus Logic to verify that the information is current and complete. Testing and other quality control techniques are utilized to the extent Cirrus Logic deems necessary. Specific testing of all parameters of each device is not necessarily performed. In order to minimize risks associated with customer applications, the customer must use adequate design and operating safeguards to minimize inherent or procedural hazards. Cirrus Logic is not liable for applications assistance or customer product design. The customer is solely responsible for its selection and use of Cirrus Logic products. Use of Cirrus Logic products may entail a choice between many different modes of operation, some or all of which may require action by the user, and some or all of which may be optional. Nothing in these materials should be interpreted as instructions or suggestions to choose one mode over another. Likewise, description of a single mode should not be interpreted as a suggestion that other modes should not be used or that they would not be suitable for operation. Features and operations described herein are for illustrative purposes only.

CERTAIN APPLICATIONS USING SEMICONDUCTOR PRODUCTS MAY INVOLVE POTENTIAL RISKS OF DEATH, PERSONAL INJURY, OR SEVERE PROPERTY OR ENVIRONMENTAL DAMAGE ("CRITICAL APPLICATIONS"). CIRRUS LOGIC PRODUCTS ARE NOT DESIGNED, AUTHORIZED OR WARRANTED FOR USE IN PRODUCTS SURGICALLY IMPLANTED INTO THE BODY, AUTOMOTIVE SAFETY OR SECURITY DEVICES, NUCLEAR SYSTEMS, LIFE SUPPORT PRODUCTS OR OTHER CRITICAL APPLICATIONS. INCLUSION OF CIRRUS LOGIC PRODUCTS IN SUCH APPLICATIONS IS UNDERSTOOD TO BE FULLY AT THE CUSTOMER'S RISK AND CIRRUS LOGIC DISCLAIMS AND MAKES NO WARRANTY, EXPRESS, STATUTORY OR IMPLIED, INCLUDING THE IMPLIED WARRANTIES OF MERCHANTABILITY AND FITNESS FOR PARTICULAR PURPOSE, WITH REGARD TO ANY CIRRUS LOGIC PRODUCT THAT IS USED IN SUCH A MANNER. IF THE CUSTOMER OR CUSTOMER'S CUSTOMER USES OR PERMITS THE USE OF CIRRUS LOGIC PRODUCTS IN CRITICAL APPLICATIONS, CUSTOMER AGREES, BY SUCH USE, TO FULLY INDEMNIFY CIRRUS LOGIC, ITS OFFICERS, DIRECTORS, EMPLOYEES, DISTRIBUTORS AND OTHER AGENTS FROM ANY AND ALL LIABILITY, INCLUDING ATTORNEYS' FEES AND COSTS, THAT MAY RESULT FROM OR ARISE IN CONNECTION WITH THESE USES.

This document is the property of Cirrus Logic and by furnishing this information, Cirrus Logic grants no license, express or implied, under any patents, mask work rights, copyrights, trademarks, trade secrets or other intellectual property rights. Any provision or publication of any third party's products or services does not constitute Cirrus Logic's approval, license, warranty or endorsement thereof. Cirrus Logic gives consent for copies to be made of the information contained herein only for use within your organization with respect to Cirrus Logic integrated circuits or other products of Cirrus Logic, and only if the reproduction is without alteration and is accompanied by all associated copyright, proprietary and other notices and conditions (including this notice). This consent does not extend to other copying such as copying for general distribution, advertising or promotional purposes, or for creating any work for resale. This document and its information is provided "AS IS" without warranty of any kind (express or implied). All statutory warranties and conditions are excluded to the fullest extent possible. No responsibility is assumed by Cirrus Logic for the use of information herein, including use of this information as the basis for manufacture or sale of any items, or for infringement of patents or other rights of third parties. Cirrus Logic, Cirrus, the Cirrus Logic logo design, SoundClear, WISCE, SmartDAC, and SilentSwitch are among the trademarks of Cirrus Logic. Other brand and product names may be trademarks or service marks of their respective owners.

Copyright © 2009–2016 Cirrus Logic, Inc. All rights reserved.

REVISION HISTORY

DATE	REV	DESCRIPTION OF CHANGES	PAGE	CHANGED BY
05/08/11	3.3	Low Power Playback mode definition and characteristics added. ISEL (bias control) register added	22,23,81, 82,142	PH
10/01/12	3.3	Order codes updated to WM8904CGEFL/V and WM8904CGEFL/RV to reflect change to copper wire bonding	8	JMacD
24/08/12	3.3	36 Ball package diagram updated to DM066.C	185	JMacD
27/08/12	3.3	Headline DAC to headphone playback power consumption updated to 3.0mW.	1	ssaunders
03/09/12	3.3	W-CSP reel quantity changed to 5,000	8	JMacD
24/06/14	3.4	W-CSP reel quantity changed to 3,500	8	JMacD
11/11/16	3.5	36-ball package drawing updated to DM066.D	181	PH
21/12/16	4.0	Revision status updated		PH