MMIC REFLECTIONLESS

Band Pass Filter

XBF-183+

50Ω 17.5 to 18.5 GHz

THE BIG DEAL

- Match to 50Ω in the stop band, eliminates undesired reflections
- Cascadable
- Good stopband rejection, 49 dB typ.
- Temperature stable, up to 105°C
- Small size, 4 x 4 mm
- Protected by US Patents 8,392,495; 9,705,467, additional patent pending
- Protected by China Patent 201080014266.1
- Protected by Taiwan Patent I581494



Generic photo used for illustration purposes only

CASE STYLE: DG1847

+RoHS Compliant
The +Suffix identifies RoHS Compliance.
See our website for methodologies and qualifications

APPLICATIONS

- Transmitters & Receivers
- Harmonic Rejection
- Spurious Rejection

GENERAL DESCRIPTION

Mini-Circuits' XBF-183+ four-section reflectionless filter employs a novel filter topology which absorbs and terminates stop band signals internally rather than reflecting them back to the source. This new capability enables unique applications for filter circuits beyond those suited to traditional approaches. Traditional filters are reflective in the stop band, sending signals back to the source at 100% of the power level. These reflections interact with neighboring components and often result in inter-modulation and other interferences. Reflectionless filters eliminate stop band reflections, allowing them to be paired with sensitive devices and used in applications that otherwise require circuits such as isolation amplifiers or attenuators.

KEY FEATURES

Features	Advantages
Easy integration with sensitive reflective components, e.g. mixers, multipliers	Reflectionless filters absorb unwanted signals, preventing reflections back to the source. This reduces generation of additional unwanted signals without the need for extra components like attenuators, improving system dynamic range and saving board space.
High stopband rejection, up to 60 dB	Ideal for applications where suppression of strong spurious signals and intermodulation products is needed.
Enables stable integration of wideband amplifiers	Because reflectionless filters maintain good impedance in the stop band; they can be integrated with high gain, wideband amplifiers without the risk of creating instabilities in these out of band regions.
Cascadable	Reflectionless filters can be cascaded in multiple sections to provide sharper and higher attenuation, while also preventing any standing waves that could affect pass band signals.
Excellent power handling in a tiny surface mount device up to 0.5W in passband	High power handling extends the usability of these filters to the transmit path for inter-stage filtering.
Small size, 4x4mm MCLP	Allows replacement of filter/attenuator pairs with a single reflectionless filter, saving board space. Tiny footprint saves space in dense layouts while providing low inductance, repeatable transitions, and excellent thermal contact to the PCB.
Excellent repeatability of RF performance	Through semiconductor IPD process, X-series filters are inherently repeatable for large volume production.
Operating temperature up to 105 ˚C	Suitable for operation close to high power components.

*IPD – Integrated Passive Device, is a GaAs semiconductor process

MMIC REFLECTIONLESS

Band Pass Filter

XBF-183+

50Ω 17.5 to 18.5 GHz

ELECTRICAL SPECIFICATIONS[1] AT +25°C

Parameter		F#	Frequency (MHz)	Min.	Typ.	Max.	Unit
Pass Band	Insertion Loss	F2-F3	17500 - 18500	—	4.9	5.8	dB
	VSWR	F2-F3	17500 - 18500	—	1.6	—	:1
Stop Band, Lower	Rejection	DC-F1	DC - 9000	43	67	—	dB
	VSWR	DC-F1	DC - 9000	—	1.2	—	:1
Stop Band, Upper	Rejection	F4-F5	27000 - 32000	39	56	—	dB
		F5-F6	32000 - 40000	32	43	—	
	VSWR	F4-F5	27000 - 32000	—	2.2	—	:1
		F5-F6	32000 - 40000	—	3.0	—	

1. Measured on Mini-Circuits Characterization Test Board TB-968-183+

ABSOLUTE MAXIMUM RATINGS[2]

Parameter	Ratings
Operating Temperature	-55°C to +105°C
Storage Temperature	-65°C to +150°C
RF Power Input, Passband (F2-F3)[3]	0.5 W at 25°C
RF Power Input, Stopband (DC-F2, F3-F6)[4]	0.16 W at 25°C

2. Permanent damage may occur if any of these limits are exceeded.
3. Passband rating derates linearly to 0.25 W at 105°C ambient
4. Stopband rating derates linearly to 0.08 W at 105°C ambient

SPECIFICATION DEFINITION

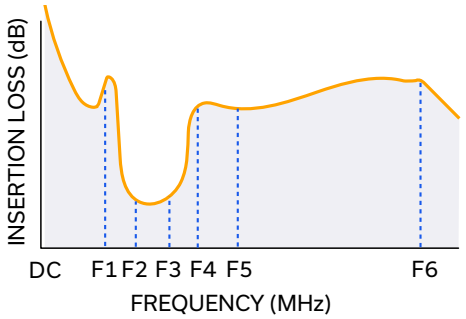

Band Pass Filter

XBF-183+

50Ω 17.5 to 18.5 GHz

SIMPLIFIED SCHEMATIC AND PAD DESCRIPTION

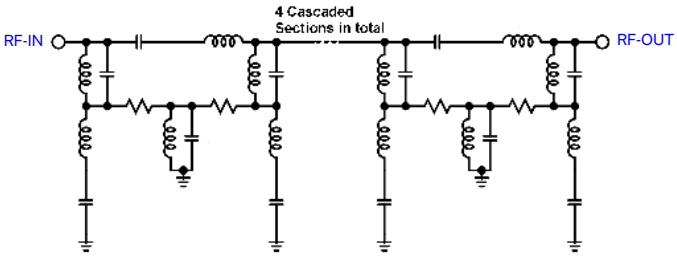

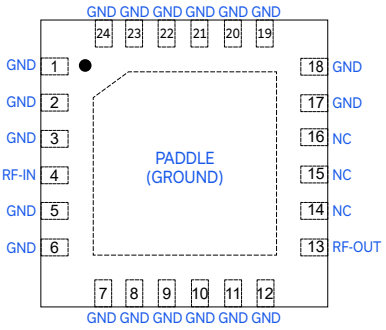

Function	Pad Number	Description
RF-IN	4	RF Input Pad
RF-OUT	13	RF Output Pad
GND	1-3, 5-12, 17-24 & paddle	Connected to ground
NC (GND Externally)	14-16	No internal connection

PRODUCT MARKING

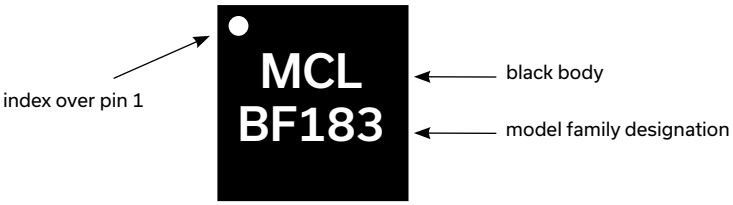

Marking may contain other features or characters for internal lot control

Band Pass Filter

XBF-183+

50Ω 17.5 to 18.5 GHz

TYPICAL PERFORMANCE DATA AT +25°C

Frequency (GHz)	Insertion Loss (dB)	VSWR (:1)
0.01	99.01	1.05
0.1	97.17	1.06
0.5	89.45	1.08
1.0	83.97	1.09
5.0	55.73	1.11
10.0	61.60	1.35
12.0	11.86	1.33
14.0	5.01	1.15
17.5	4.26	1.56
18.5	4.34	1.18
20.0	5.14	1.03
22.0	8.56	1.39
24.0	22.19	1.37
26.0	53.42	1.31
28.0	59.65	1.77
30.0	54.79	1.89
32.0	48.28	1.71
36.0	43.86	1.41
40.0	52.07	4.38

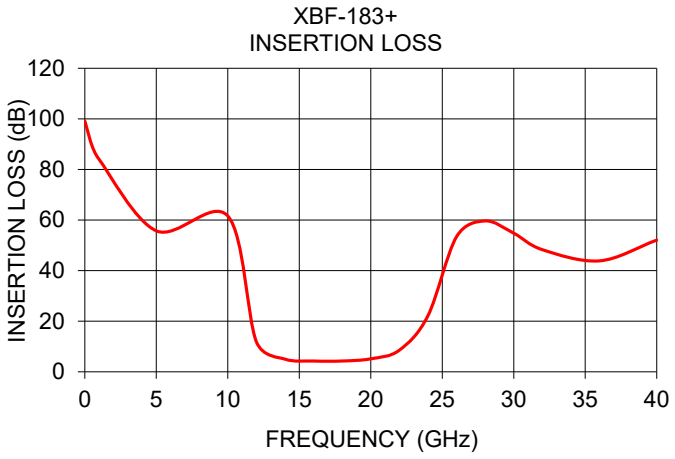

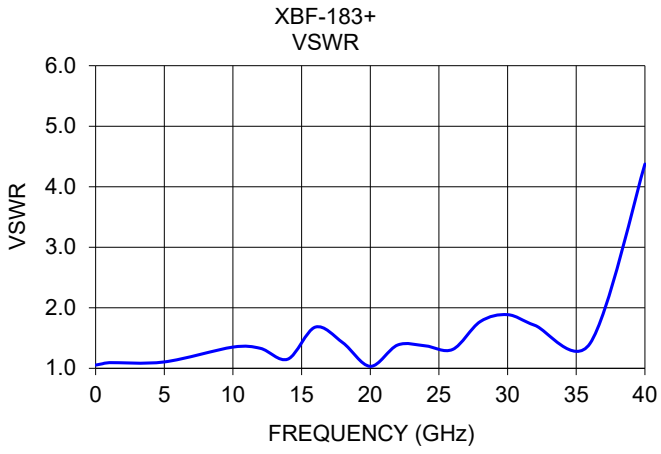

Band Pass Filter

XBF-183+

50Ω 17.5 to 18.5 GHz

ADDITIONAL DETAILED TECHNICAL INFORMATION IS AVAILABLE ON OUR DASH BOARD. TO ACCESS CLICK HERE

Performance Data and Graphs	Data Graphs S-Parameter (S3P Files) Data Set (.zip file)
Case Style	DG1847 Plastic package, exposed paddle lead finish: matte-tin
Tape & Reel **Standard quantities available on reel**	F66 7" reels with 20, 50, 100, 200, 500 or 1000 devices 13" reels with 2000, 3000, and 4000 devices
Suggested Layout for PCB Design	PL-451
Evaluation Board	TB-844-282B+ (without connectors) TB-844-282BC+ (with connectors) B20-118-F1+ Connector sold separately
Environmental Ratings	ENV82

ESD RATING

Human body model (HBM): Class 2(2000 to <4000 V) in accordance with ANSI/ESD 5.1-20012001

MSL TEST FLOW CHART

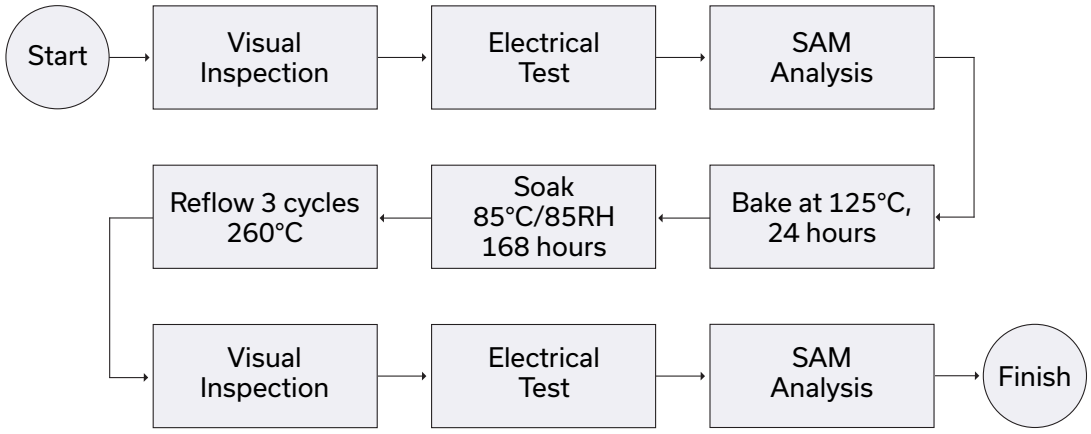

Band Pass Filter

XBF-183+

50Ω 17.5 to 18.5 GHz

REFLECTIONLESS FILTER APPLICATION NOTE

Application Circuit Example: Pairing mixers with reflectionless filters to improve system dynamic range

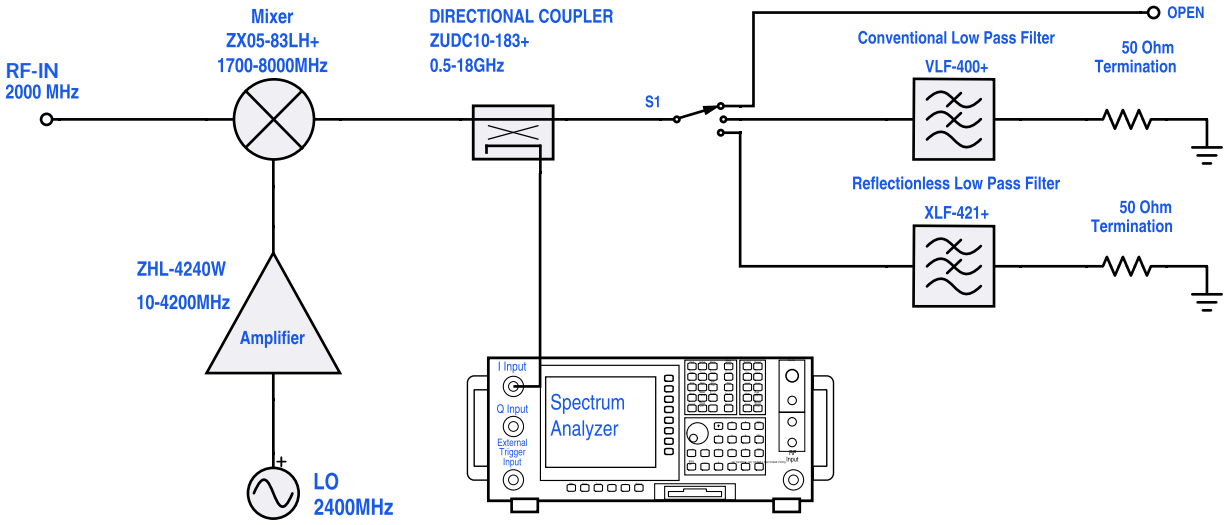

Test block diagram: IF output reflection spectrum with single input frequency

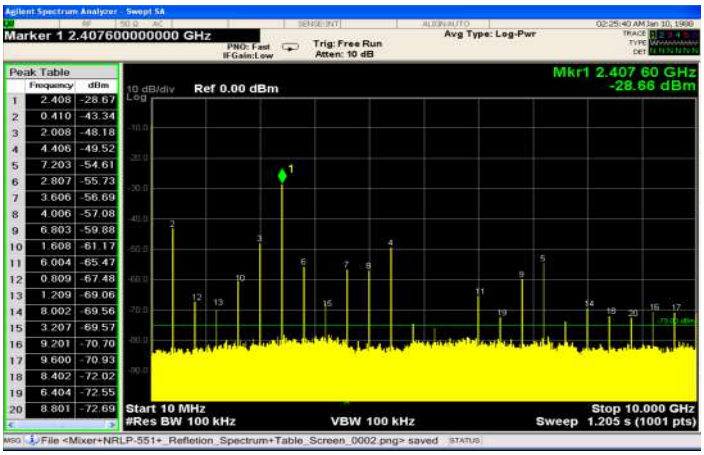

Figure 1. IF output reflection spectrum without filter

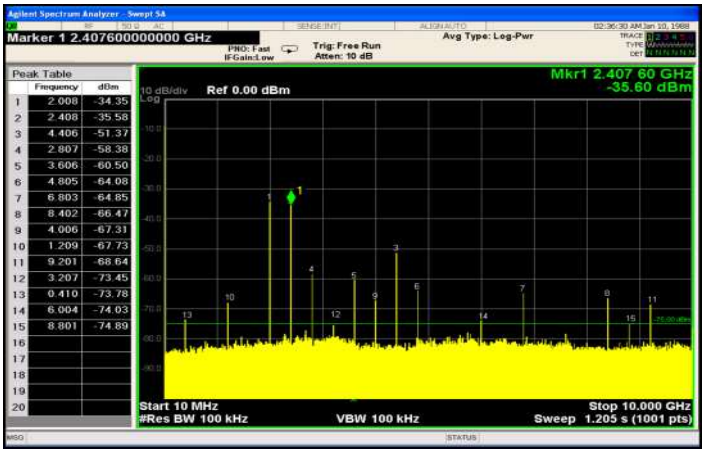

Figure 2. IF output reflection spectrum with conventional filter

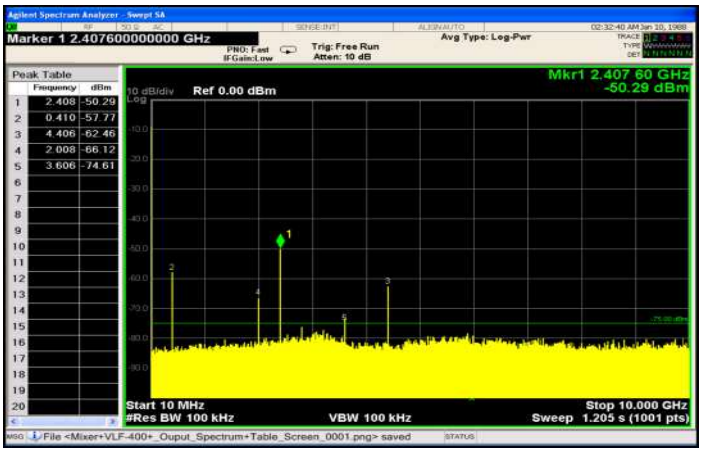

Figure 3. IF output reflection spectrum with reflectionless filter

An application circuit was assembled to measure the IF reflection spectrum at the output of a mixer when the mixer was paired with a conventional filter versus a reflectionless filter.

While the conventional filter reduces the reflections present when the mixer is used alone (no filter), the reflectionless filter virtually eliminates those reflections altogether.

The reflected signal at marker 1 in the figures above exhibits a reduction of more than 20 dB from -28.7 dBm to -50.3 dBm when the reflectionless filter is used as compared to the conventional filter, thus eliminating unwanted spurious mixing products and improvingsystem dynamic range.

For more information, refer to application note AN-75-007

NOTES

A. Performance and quality attributes and conditions not expressly stated in this specification document are intended to be excluded and do not form a part of this specification document.
B. Electrical specifications and performance data contained in this specification document are based on Mini-Circuit's applicable established test performance criteria and measurement instructions.
C. The parts covered by this specification document are subject to Mini-Circuits standard limited warranty and terms and conditions (collectively, "Standard Terms"); Purchasers of this part are entitled to the rights and benefits contained therein. For a full statement of the standard terms and the exclusive rights and remedies thereunder, please visit Mini-Circuits' website at www.minicircuits.com/terms/viewterm.html