Model XC0900A-03

Rev .B

Hybrid Coupler
3 dB, 90°



Description

The XC0900A-03 is a low profile, high performance 3dB hybrid coupler in a new easy to use, manufacturing friendly surface mount package. It is designed for AMPS band applications. The XC0900A-03 is designed particularly for balanced power and low noise amplifiers, plus signal distribution and other applications where low insertion loss and tight amplitude and phase balance is required. It can be used in high power applications up to 225 Watts.

Parts have been subjected to rigorous qualification testing and they are manufactured using materials with coefficients of thermal expansion (CTE) compatible with common substrates such as FR4, G-10, RF-35, RO4350 and polyimide.

Features:

- **811 – 1000 MHz**
- **AMPS**
- **High Power**
- **Very Low Loss**
- **Tight Amplitude Balance**
- **High Isolation**
- **Production Friendly**
- **Tape and Reel**
- **Available in Lead-Free (as illustrated) or Tin-Lead**
- **Reliable, FIT=0.53**

Electrical Specifications **

Frequency	Isolation	Insertion Loss	VSWR	Amplitude Balance
MHz	*dB Min*	*dB Max*	*Max : 1*	*dB Max*
811 - 1000	23	0.15	1.15	± 0.20
869 - 894	25	0.12	1.12	± 0.14
925 - 960	25	0.12	1.12	± 0.14

Phase	Power	QJC	Operating Temp.
Degrees	*Avg. CW Watts*	*ºC/Watt*	*ºC*
90 ± 2.0	175	18	-55 to +95
90 ± 2.0	225	18	-55 to +95
90 ± 2.0	225	18	-55 to +95

**Specification based on performance of unit properly installed on Anaren Test Board 58481-0001 with small signal applied. Specifications subject to change without notice. Refer to parameter definitions for details.

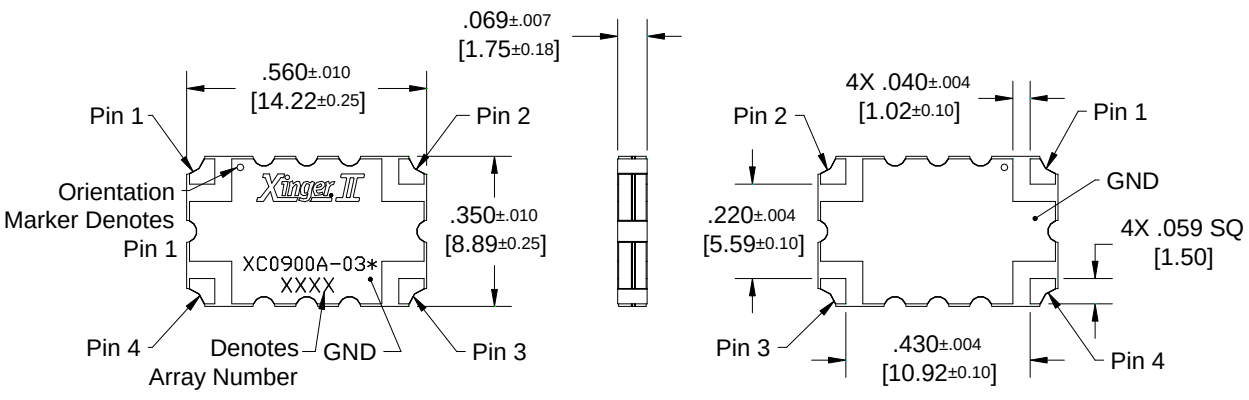

Dimensions are in Inches [Millimeters]
XC0900A-03* Mechanical Outline

Tolerances are Non-Cumulative
* = Plating Finish

Anaren
What'll we think of next?™



Available on Tape and Reel for Pick and Place Manufacturing.

USA/Canada: (315) 432-8909
Toll Free: (800) 411-6596
Europe: +44 2392-232392

Downloaded from Arrow.com.

Hybrid Coupler Pin Configuration

The XC0900A-03 has an orientation marker to denote Pin 1. Once port one has been identified the other ports are known automatically. Please see the chart below for clarification:

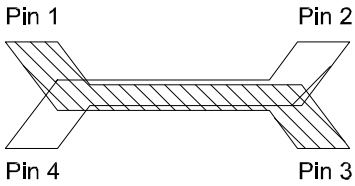

Configuration	Pin 1	Pin 2	Pin 3	Pin 4
Splitter	Input	Isolated	-3dB $\angle q - 90$	-3dB $\angle q$
Splitter	Isolated	Input	-3dB $\angle q$	-3dB $\angle q - 90$
Splitter	-3dB $\angle q - 90$	-3dB $\angle q$	Input	Isolated
Splitter	-3dB $\angle q$	-3dB $\angle q - 90$	Isolated	Input
***Combiner**	A $\angle q - 90$	A $\angle q$	Isolated	Output
***Combiner**	A $\angle q$	A $\angle q - 90$	Output	Isolated
***Combiner**	Isolated	Output	A $\angle q - 90$	A $\angle q$
***Combiner**	Output	Isolated	A $\angle q$	A $\angle q - 90$

*Note: "A" is the amplitude of the applied signals. When two quadrature signals with equal amplitudes are applied to the coupler as described in the table, they will combine at the output port. If the amplitudes are not equal, some of the applied energy will be directed to the isolated port.

Downloaded from Arrow.com.

Insertion Loss and Power Derating Curves

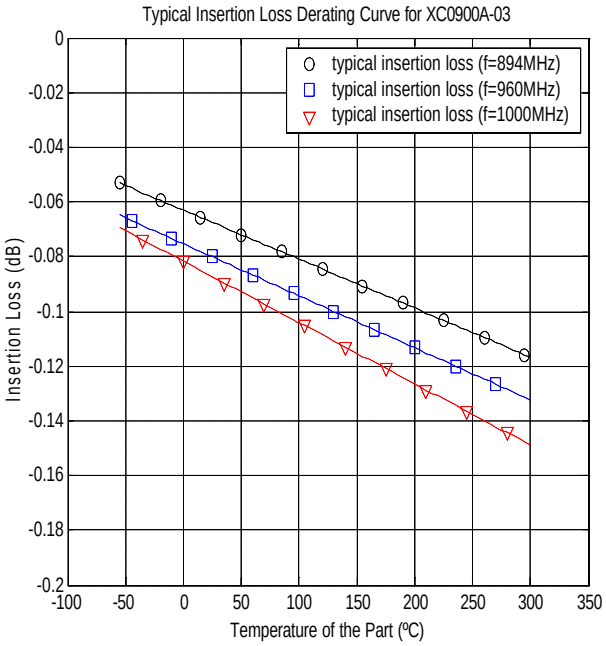

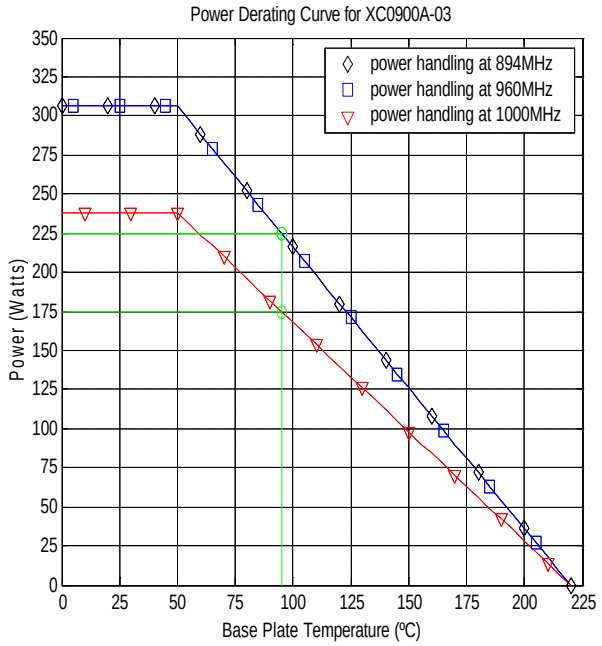

Insertion Loss Derating:

The insertion loss, at a given frequency, of a group of couplers is measured at 25°C and then averaged. The measurements are performed under small signal conditions (i.e. using a Vector Network Analyzer). The process is repeated at 95°C, 150°C, and 200°C. A best-fit line for the measured data is computed and then plotted from -55°C to 300°C.

Power Derating:

The power handling and corresponding power derating plots are a function of the thermal resistance, mounting surface temperature (base plate temperature), maximum continuous operating temperature of the coupler, and the thermal insertion loss. The thermal insertion loss is defined in the Power Handling section of the data sheet.

As the mounting interface temperature approaches the maximum continuous operating temperature, the power handling decreases to zero.



Downloaded from Arrow.com.

Typical Performance (-55°C, 25°C and 95°C): 800-1000 MHz

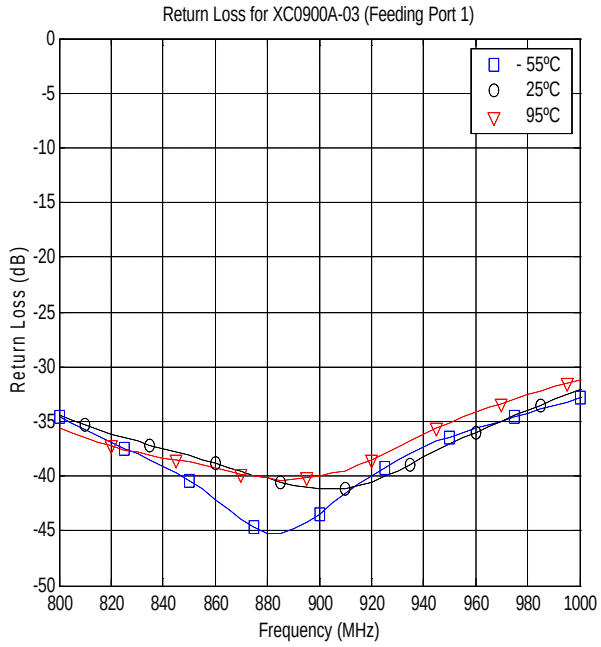

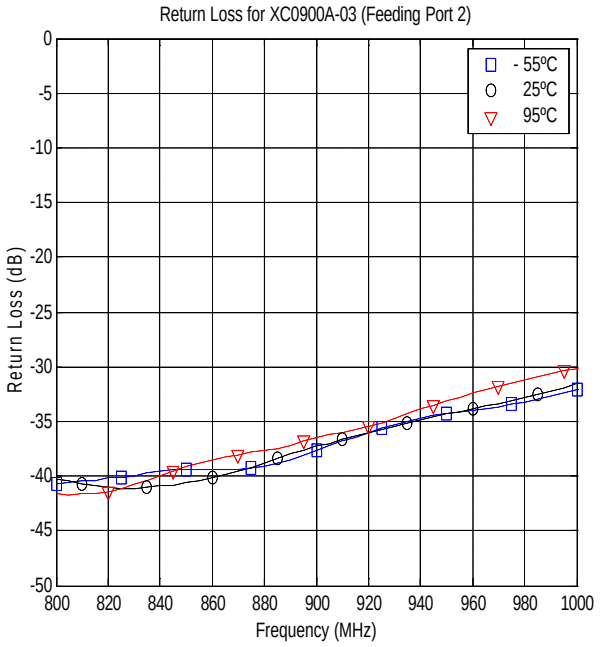

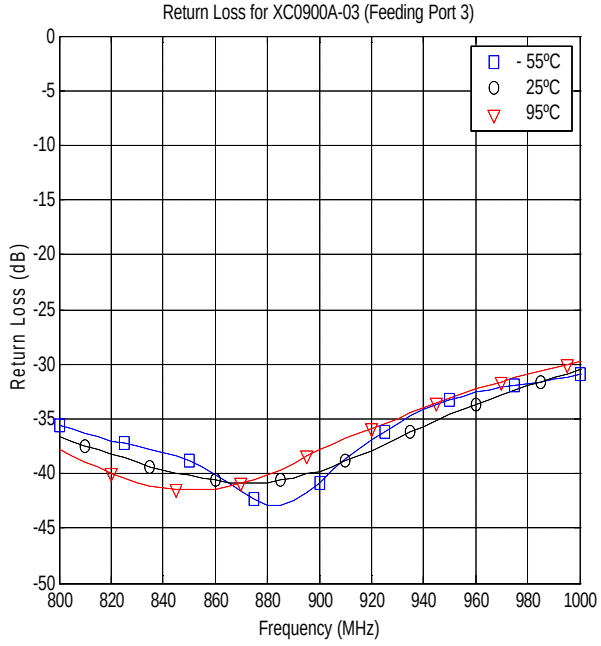

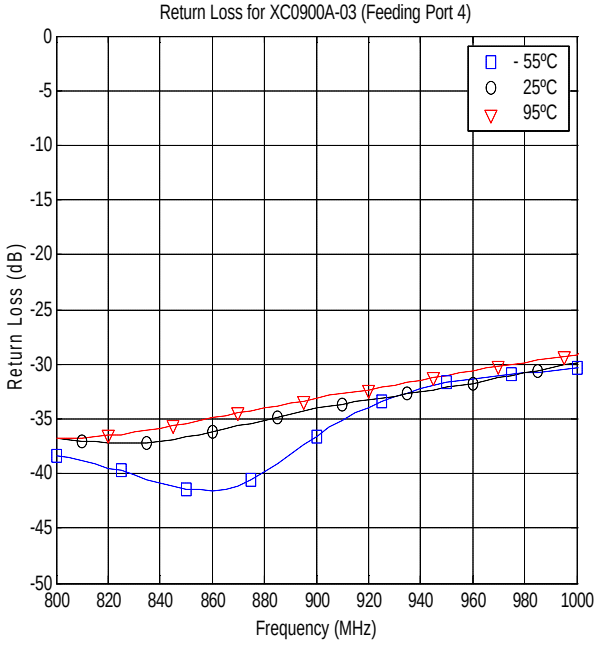

USA/Canada: (315) 432-8909
Toll Free: (800) 411-6596
Europe: +44 2392-232392

Available on Tape and Reel for Pick and Place Manufacturing.



Anaren
What'll we think of next?™

Downloaded from Arrow.com.

Typical Performance (-55°C, 25°C and 95°C): 800-1000 MHz

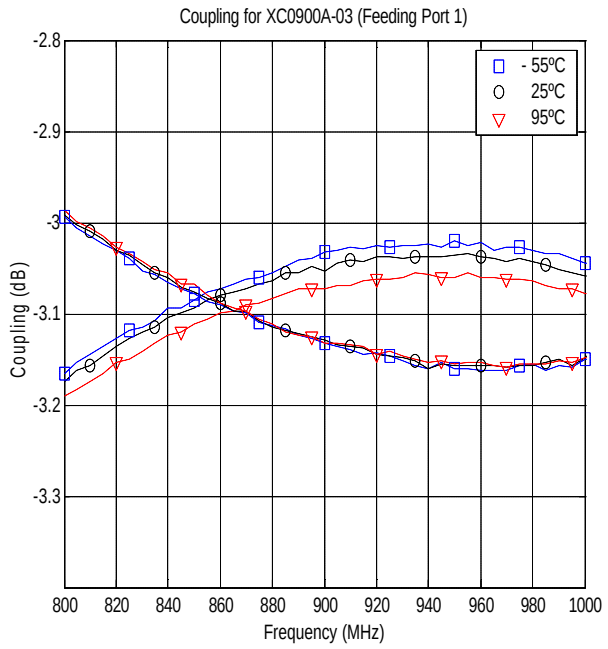

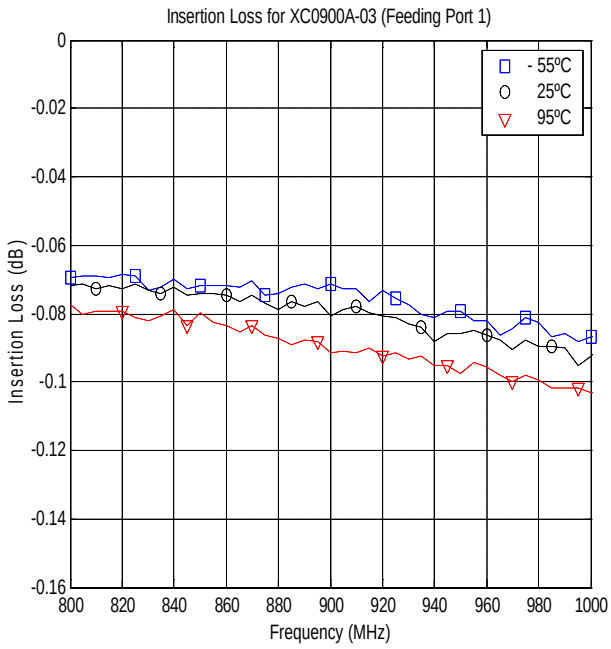

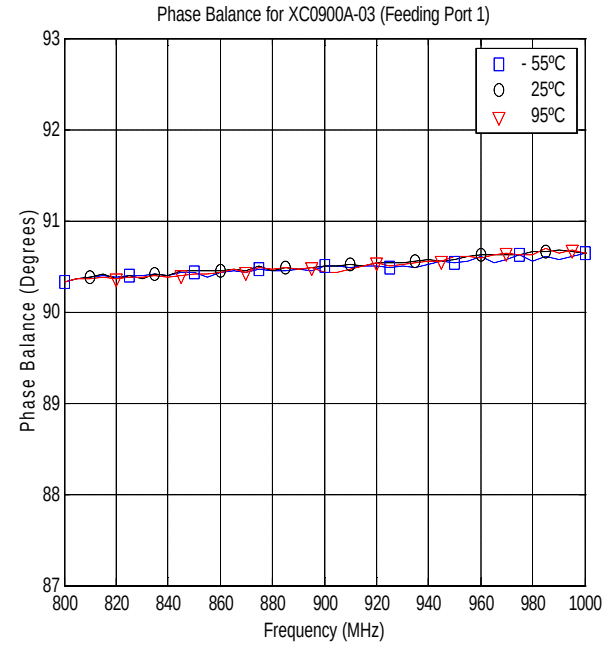

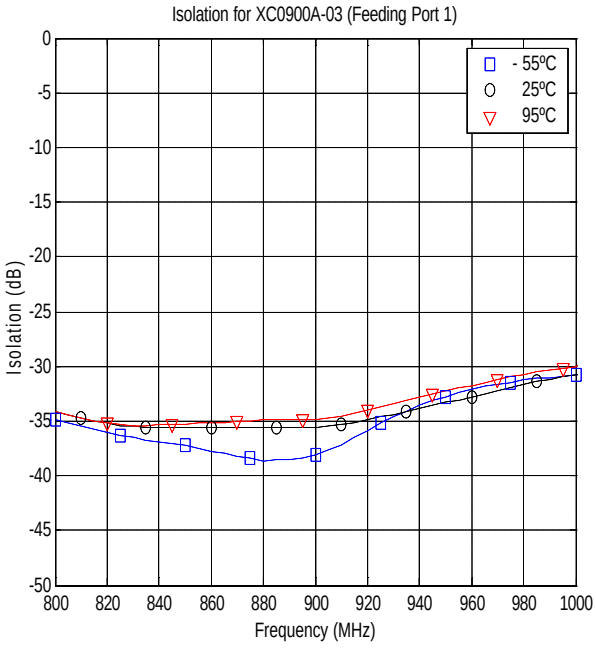



Available on Tape and Reel for Pick and Place Manufacturing.

USA/Canada: (315) 432-8909
Toll Free: (800) 411-6596
Europe: +44 2392-232392

Downloaded from Arrow.com.

Definition of Measured Specifications

Parameter	Definition	Mathematical Representation
VSWR (Voltage Standing Wave Ratio)	The impedance match of the coupler to a 50Ω system. A VSWR of 1:1 is optimal.	$VSWR = \frac{V_{max}}{V_{min}}$ Vmax = voltage maxima of a standing wave Vmin = voltage minima of a standing wave
Return Loss	The impedance match of the coupler to a 50Ω system. Return Loss is an alternate means to express VSWR.	Return Loss (dB)= $20\log \frac{VSWR+1}{VSWR-1}$
Insertion Loss	The input power divided by the sum of the power at the two output ports.	Insertion Loss(dB)= $10\log \frac{P_{in}}{P_{cpl}+P_{direct}}$
Isolation	The input power divided by the power at the isolated port.	Isolation(dB)= $10\log \frac{P_{in}}{P_{iso}}$
Phase Balance	The difference in phase angle between the two output ports.	Phase at coupled port – Phase at direct port
Amplitude Balance	The power at each output divided by the average power of the two outputs.	$10\log \frac{P_{cpl}}{\left(\frac{P_{cpl}+P_{direct}}{2}\right)}$ and $10\log \frac{P_{direct}}{\left(\frac{P_{cpl}+P_{direct}}{2}\right)}$

USA/Canada: (315) 432-8909
Toll Free: (800) 411-6596
Europe: +44 2392-232392

Available on Tape and Reel for Pick and Place Manufacturing.



Anaren
What'll we think of next?™

Downloaded from Arrow.com.

Notes on RF Testing and Circuit Layout

The XC0900A-03 Surface Mount Couplers require the use of a test fixture for verification of RF performance. This test fixture is designed to evaluate the coupler in the same environment that is recommended for installation. Enclosed inside the test fixture, is a circuit board that is fabricated using the recommended footprint. The part being tested is placed into the test fixture and pressure is applied to the top of the device using a pneumatic piston. A four port Vector Network Analyzer is connected to the fixture and is used to measure the S-parameters of the part. Worst case values for each parameter are found and compared to the specification. These worst case values are reported to the test equipment operator along with a Pass or Fail flag. See the illustrations below.

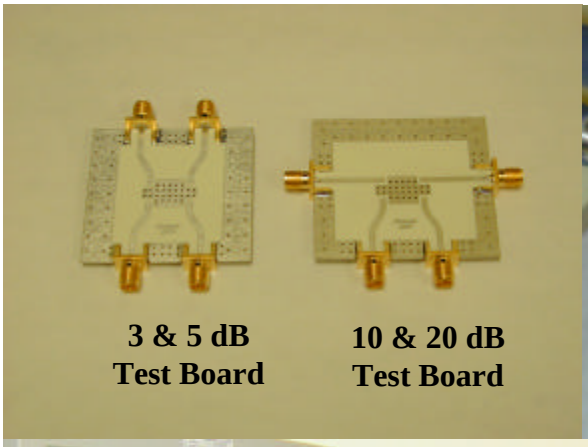

3 & 5 dB Test Board

10 & 20 dB Test Board

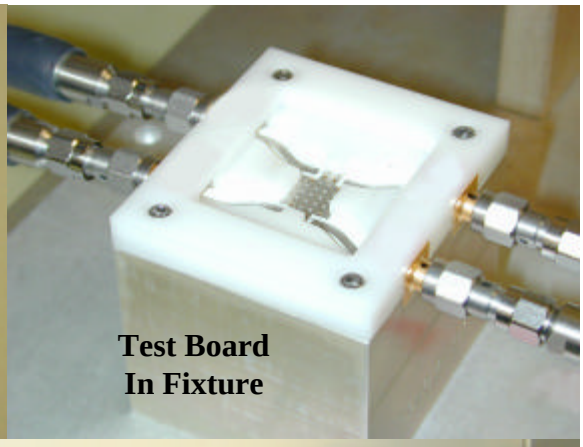

Test Board In Fixture

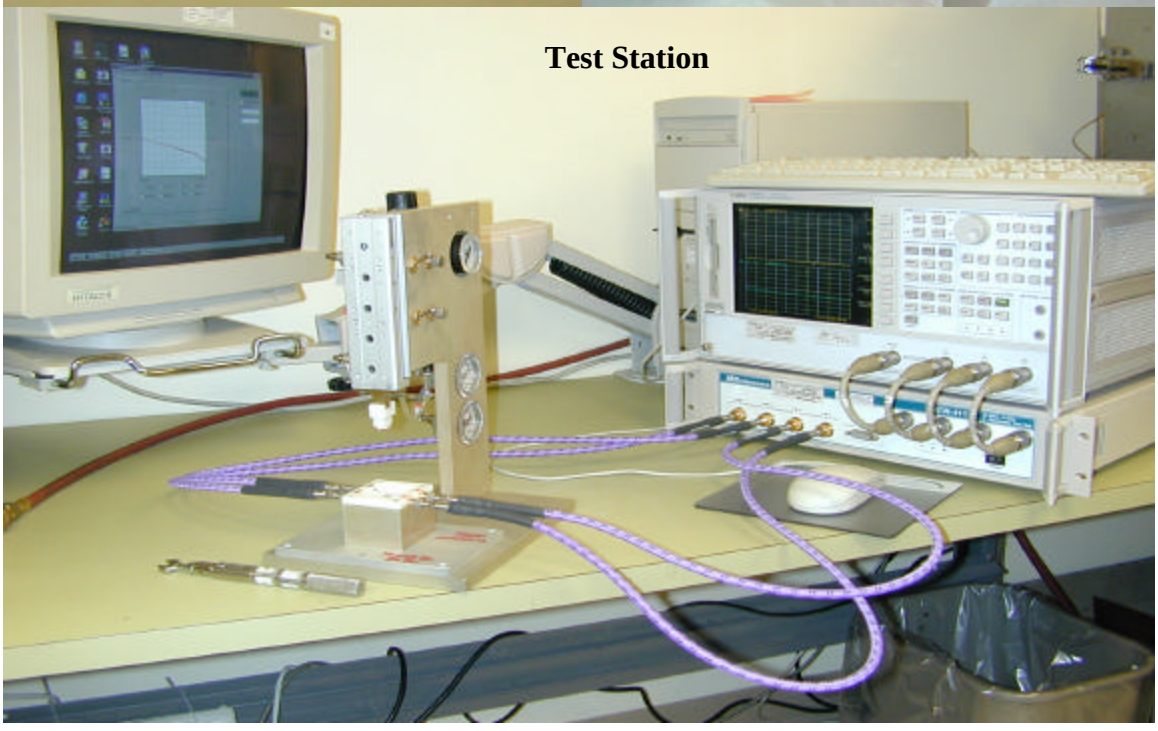

Test Station



Available on Tape and Reel for Pick and Place Manufacturing.

USA/Canada: (315) 432-8909
Toll Free: (800) 411-6596
Europe: +44 2392-232392

Downloaded from Arrow.com.

The effects of the test fixture on the measured data must be minimized in order to accurately determine the performance of the device under test. If the line impedance is anything other than 50Ω and/or there is a discontinuity at the microstrip to SMA interface, there will be errors in the data for the device under test. The test environment can never be "perfect", but the procedure used to build and evaluate the test boards (outlined below) demonstrates an attempt to minimize the errors associated with testing these devices. The lower the signal level that is being measured, the more impact the fixture errors will have on the data. Parameters such as Return Loss and Isolation/Directivity, which are specified as low as 27dB and typically measure at much lower levels, will present the greatest measurement challenge.

The test fixture errors introduce an uncertainty to the measured data. Fixture errors can make the performance of the device under test look better or worse than it actually is. For example, if a device has a known return loss of 30dB and a discontinuity with a magnitude of –35dB is introduced into the measurement path, the new measured Return Loss data could read anywhere between –26dB and –37dB. This same discontinuity could introduce an insertion phase error of up to 1°.

There are different techniques used throughout the industry to minimize the affects of the test fixture on the measurement data. Anaren uses the following design and de-embedding criteria:

- Test boards have been designed and parameters specified to provide trace impedances of 50 ±1Ω. Furthermore, discontinuities at the SMA to microstrip interface are required to be less than –35dB and insertion phase errors (due to differences in the connector interface discontinuities and the electrical line length) should be less than ±0.25° from the median value of the four paths.

- A "Thru" circuit board is built. This is a two port, microstrip board that uses the same SMA to microstrip interface and has the same total length (insertion phase) as the actual test board. The "Thru" board must meet the same stringent requirements as the test board. The insertion loss and insertion phase of the "Thru" board are measured and stored. This data is used to completely de-embed the device under test from the test fixture. The de-embedded data is available in S-parameter form on the Anaren website (www.anaren.com).

Note: The S-parameter files that are available on the anaren.com website include data for frequencies that are outside of the specified band. It is important to note that the test fixture is designed for optimum performance through 2.3GHz. Some degradation in the test fixture performance will occur above this frequency and connector interface discontinuities of –25dB or more can be expected. This larger discontinuity will affect the data at frequencies above 2.3GHz.

Circuit Board Layout

The dimensions for the Anaren test board are shown below. The test board is printed on Rogers RO4350 material that is 0.030" thick. Consider the case when a different material is used. First, the pad size must remain the same to accommodate the part. But, if the material thickness or dielectric constant (or both) changes, the reactance at the interface to the coupler will also change. Second, the linewidth required for 50Ω will be different and this will introduce a step in the line at the pad where the coupler interfaces with the printed microstrip trace. Both of these conditions will affect the performance of the part. **To achieve the specified performance, serious attention must be given to the design and layout of the circuit environment in which this component will be used.**

If a different circuit board material is used, an attempt should be made to achieve the same interface pad reactance that is present on the Anaren RO4350 test board. When thinner circuit board material is used, the ground plane will be closer to the pad yielding more capacitance for the same size interface pad. The same is true if the dielectric constant of the circuit board material is higher than is used on the Anaren test board. In both of these cases, narrowing the line before the interface pad will introduce a series inductance, which, when properly tuned, will compensate for the extra capacitive reactance. If a thicker circuit board or one with a lower dielectric constant is used,

Downloaded from Arrow.com.

the interface pad will have less capacitive reactance than the Anaren test board. In this case, a wider section of line before the interface pad (or a larger interface pad) will introduce a shunt capacitance and when properly tuned will match the performance of the Anaren test board.

Notice that the board layout for the 3dB and 5dB couplers is different from that of the 10dB and 20dB couplers. The test board for the 3dB and 5dB couplers has all four traces interfacing with the coupler at the same angle. The test board for the 10dB and 20dB couplers has two traces approaching at one angle and the other two traces at a different angle. **The entry angle of the traces has a significant impact on the RF performance and these parts have been optimized for the layout used on the test boards shown below.**

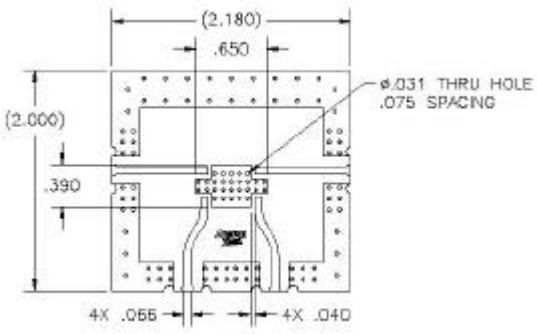

10 & 20dB Test Board

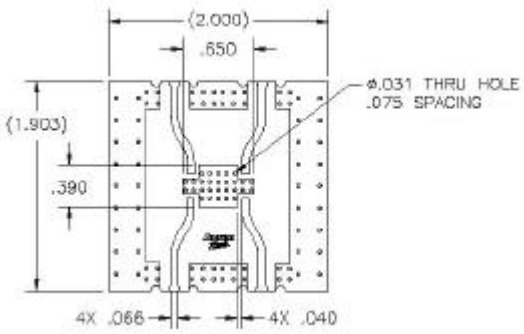

3 & 5dB Test Board

Testing Sample Parts Supplied on Anaren Test Boards

If you have received a coupler installed on an Anaren produced microstrip test board, please remember to remove the loss of the test board from the measured data. The loss is small enough that it is not of concern for Return Loss and Isolation/Directivity, but it should certainly be considered when measuring coupling and calculating the insertion loss of the coupler. An S-parameter file for a "Thru" board (see description of "Thru" board above) will be supplied upon request. As a first order approximation, one should consider the following loss estimates:

Frequency Band	Avg. Ins. Loss of Test Board @ 25°C
800 – 1000 MHz	~ 0.07dB
1700 – 2300 MHz	~ 0.12dB

For example, a 1900MHz, 10dB coupler on a test board may measure –10.30dB from input to the coupled port at some frequency, F1. When the loss of the test board is removed, the coupling at F1 becomes -10.18dB (-10.30dB + 0.12dB). This compensation must be made to both the coupled and direct path measurements when calculating insertion loss.

The loss estimates in the table above come from room temperature measurements. It is important to note that the loss of the test board will change with temperature. This fact must be considered if the coupler is to be evaluated at other temperatures.



Downloaded from Arrow.com.

Peak Power Handling

High-Pot testing of these couplers during the qualification procedure resulted in a minimum breakdown voltage of 1.7KV (minimum recorded value). This voltage level corresponds to a breakdown resistance capable of handling at least 12dB peaks over average power levels, for very short durations. The breakdown location consistently occurred across the air interface at the coupler contact pads (see illustration below). The breakdown levels at these points will be affected by any contamination in the gap area around these pads. These areas must be kept clean for optimum performance. It is recommended that the user test for voltage breakdown under the maximum operating conditions and over worst case modulation induced power peaking. This evaluation should also include extreme environmental conditions (such as high humidity).

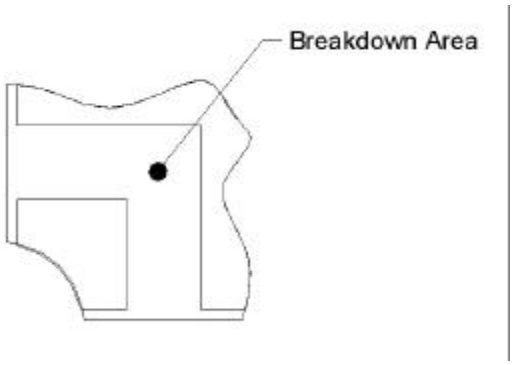

Orientation Marker

A printed circular feature appears on the top surface of the coupler to designate Pin 1. This orientation marker is **not** intended to limit the use of the symmetry that these couplers exhibit but rather to facilitate consistent placement of these parts into the tape and reel package. This ensures that the components are always delivered with the same orientation. Refer to the table on page 2 of the data sheet for allowable pin configurations.

Test Plan

Xinger II couplers are manufactured in large panels and then separated. A sample population of parts is RF small signal tested at room temperature in the fixture described above. All parts are DC tested for shorts/opens. (See "Qualification Flow Chart" section for details on the accelerated life test procedures.)

Downloaded from Arrow.com.

Power Handling

The average power handling (total input power) of a Xinger coupler is a function of:

- Internal circuit temperature.
- Unit mounting interface temperature.
- Unit thermal resistance
- Power dissipated within the unit.

All thermal calculations are based on the following assumptions:

- The unit has reached a steady state operating condition.
- Maximum mounting interface temperature is 95°C.
- Conduction Heat Transfer through the mounting interface.
- No Convection Heat Transfer.
- No Radiation Heat Transfer.
- The material properties are constant over the operating temperature range.

Finite element simulations are made for each unit. The simulation results are used to calculate the unit thermal resistance. The finite element simulation requires the following inputs:

- Unit material stack-up.
- Material properties.
- Circuit geometry.
- Mounting interface temperature.
- Thermal load (dissipated power).

The classical definition for dissipated power is temperature delta (ΔT) divided by thermal resistance (R). The dissipated power (P_{dis}) can also be calculated as a function of the total input power (P_{in}) and the thermal insertion loss (IL_{therm}):

$$P_{dis} = \frac{\Delta T}{R} = P_{in} \cdot \left(1 - 10^{\frac{-IL_{therm}}{10}} \right) \quad (W) \qquad (1)$$

Power flow and nomenclature for an “X” style coupler is shown in Figure 1.



Downloaded from Arrow.com.

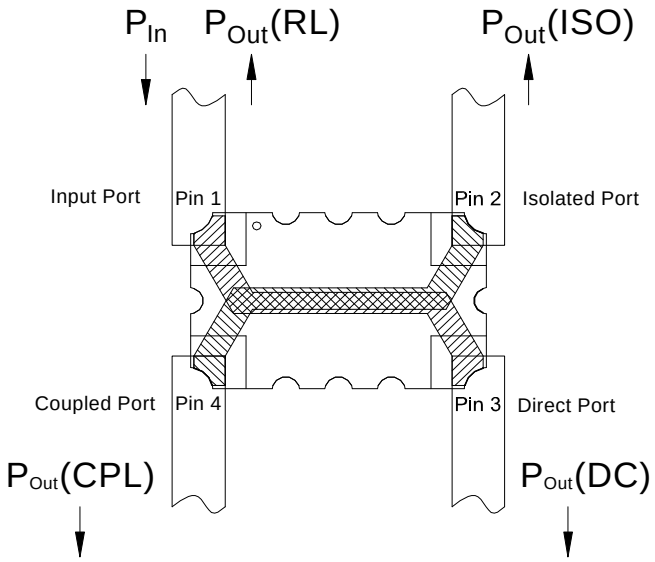

Figure 1

The coupler is excited at the input port with P_{in} (watts) of power. Assuming the coupler is not ideal, and that there are no radiation losses, power will exit the coupler at all four ports. Symbolically written, $P_{out(RL)}$ is the power that is returned to the source because of impedance mismatch, $P_{out(ISO)}$ is the power at the isolated port, $P_{out(CPL)}$ is the power at the coupled port, and $P_{out(DC)}$ is the power at the direct port.

At Anaren, insertion loss is defined as the log of the input power divided by the sum of the power at the coupled and direct ports:

Note: in this document, insertion loss is taken to be a positive number. In many places, insertion loss is written as a negative number. Obviously, a mere sign change equates the two quantities.

$$IL = 10 \cdot \log_{10}\left(\frac{P_{in}}{P_{out(CPL)} + P_{out(DC)}} \right) \quad (dB) \qquad (2)$$

In terms of S-parameters, IL can be computed as follows:

$$IL = -10 \cdot \log_{10}\left(|S_{31}|^2 + |S_{41}|^2 \right) \quad (dB) \qquad (3)$$

We notice that this insertion loss value includes the power lost because of return loss as well as power lost to the isolated port.

For thermal calculations, we are only interested in the power lost "inside" the coupler. Since $P_{out(RL)}$ is lost in the source termination and $P_{out(ISO)}$ is lost in an external termination, they are not be included in the insertion loss for thermal calculations. Therefore, we define a new insertion loss value solely to be used for thermal calculations:

$$IL_{therm} = 10 \cdot \log_{10}\left(\frac{P_{in}}{P_{out(CPL)} + P_{out(DC)} + P_{out(ISO)} + P_{out(RL)}} \right) \quad (dB) \qquad (4)$$

Downloaded from Arrow.com.

In terms of S-parameters, IL_{therm} can be computed as follows:

$$IL_{therm} = -10 \cdot \log_{10}\left(\left|S_{11}\right|^2 + \left|S_{21}\right|^2 + \left|S_{31}\right|^2 + \left|S_{41}\right|^2 \right) \quad (dB) \qquad (5)$$

The thermal resistance and power dissipated within the unit are then used to calculate the average total input power of the unit. The average total steady state input power (P_{in}) therefore is:

$$P_{in} = \frac{P_{dis}}{\left(1 - 10^{\frac{-IL_{therm}}{10}}\right)} = \frac{\frac{\Delta T}{R}}{\left(1 - 10^{\frac{-IL_{therm}}{10}}\right)} \quad (W) \qquad (6)$$

Where the temperature delta is the circuit temperature (T_{circ}) minus the mounting interface temperature (T_{mnt}):

$$\Delta T = T_{circ} - T_{mnt} \quad (^oC) \qquad (7)$$

The maximum allowable circuit temperature is defined by the properties of the materials used to construct the unit. Multiple material combinations and bonding techniques are used within the Xinger II product family to optimize RF performance. Consequently the maximum allowable circuit temperature varies. Please note that the circuit temperature is not a function of the Xinger case (top surface) temperature. Therefore, the case temperature cannot be used as a boundary condition for power handling calculations.

Due to the numerous board materials and mounting configurations used in specific customer configurations, it is the end users responsibility to ensure that the Xinger II coupler mounting interface temperature is maintained within the limits defined on the power derating plots for the required average power handling. Additionally appropriate solder composition is required to prevent reflow or fatigue failure at the RF ports. Finally, reliability is improved when the mounting interface and RF port temperatures are kept to a minimum.

The power-derating curve illustrates how changes in the mounting interface temperature result in converse changes of the power handling of the coupler.



Downloaded from Arrow.com.

Mounting

In order for Xinger surface mount couplers to work optimally, there must be 50? transmission lines leading to and from all of the RF ports. Also, there must be a very good ground plane underneath the part to ensure proper electrical performance. If either of these two conditions is not satisfied, electrical performance may not meet published specifications.

Overall ground is improved if a dense population of plated through holes connect the top and bottom ground layers of the PCB. This minimizes ground inductance and improves ground continuity. All of the Xinger hybrid and directional couplers are constructed from ceramic filled PTFE composites which possess excellent electrical and mechanical stability having X and Y thermal coefficient of expansion (CTE) of 17-25 ppm/^{o}C.

When a surface mount hybrid coupler is mounted to a printed circuit board, the primary concerns are; ensuring the RF pads of the device are in contact with the circuit trace of the PCB and insuring the ground plane of neither the component nor the PCB is in contact with the RF signal.

Mounting Footprint

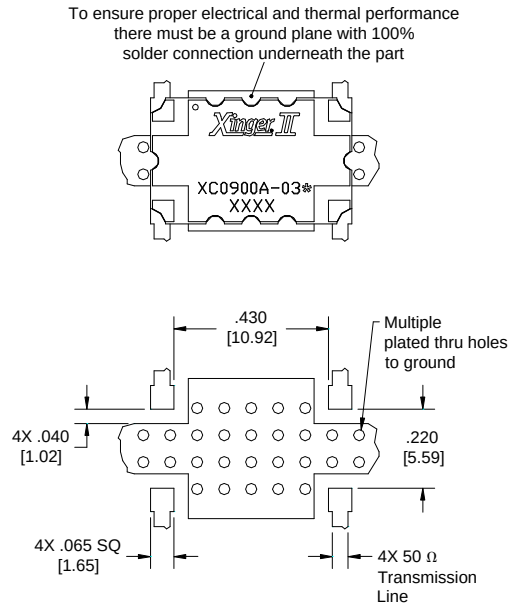

Dimensions are in Inches [Millimeters]
XC0900A-03* Mounting Footprint
* = Plating Finish

Coupler Mounting Process

The process for assembling this component is a conventional surface mount process as shown in Figure 1. This process is conducive to both low and high volume usage.



Figure 1: Surface Mounting Process Steps

Storage of Components: The Xinger II products are available in either an immersion tin or tin-lead finish. Commonly used storage procedures used to control oxidation should be followed for these surface mount components. The storage temperatures should be held between 15°C and 60°C.

Substrate: Depending upon the particular component, the circuit material has an x and y coefficient of thermal expansion of between 17 and 25 ppm/°C. This coefficient minimizes solder joint stresses due to similar expansion rates of most commonly used board substrates such as RF35, RO4350, FR4, polyimide and G-10 materials. Mounting to “hard” substrates (alumina etc.) is possible depending upon operational temperature requirements. The solder surfaces of the coupler are all copper plated with either an immersion tin or tin-lead exterior finish.

Solder Paste: All conventional solder paste formulations will work well with Anaren’s Xinger II surface mount components. Solder paste can be applied with stencils or syringe dispensers. An example of a stenciled solder paste deposit is shown in Figure 2. As shown in the figure solder paste is applied to the four RF pads and the entire ground plane underneath the body of the part.

USA/Canada: (315) 432-8909
Toll Free: (800) 411-6596
Europe: +44 2392-232392

Available on Tape and Reel for Pick and Place Manufacturing.



Anaren
What’ll we think of next?™

Downloaded from Arrow.com.

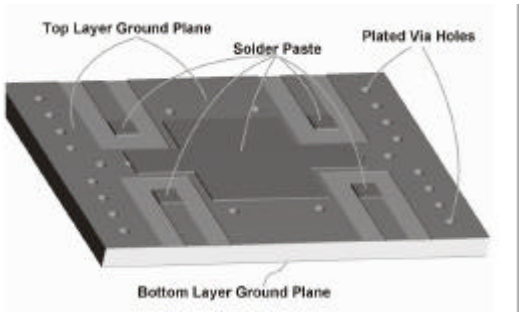

Figure 2: Solder Paste Application

Coupler Positioning: The surface mount coupler can be placed manually or with automatic pick and place mechanisms. Couplers should be placed (see Figure 3 and 4) onto wet paste with common surface mount techniques and parameters. Pick and place systems must supply adequate vacuum to hold a 0.50-0.55 gram coupler.

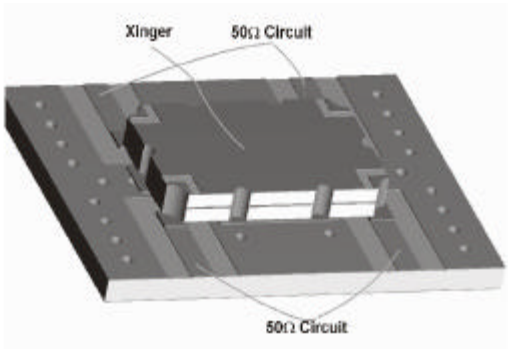

Figure 3: Component Placement

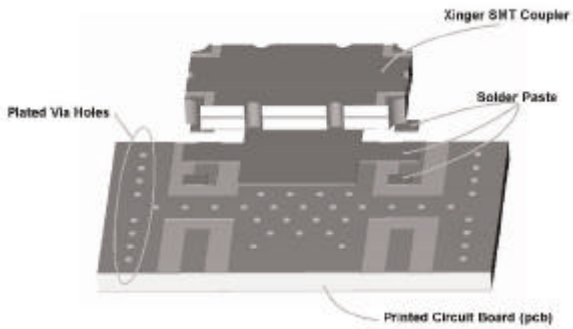

Figure 4: Mounting Features Example

Reflow: The surface mount coupler is conducive to most of today's conventional reflow methods. A low and high temperature thermal reflow profile are shown in Figures 5 and 6, respectively. Manual soldering of these components can be done with conventional surface mount non-contact hot air soldering tools. Board pre-heating is highly recommended for these selective hot air soldering methods. Manual soldering with conventional irons should be avoided.



Available on Tape and Reel for Pick and Place Manufacturing.

USA/Canada: (315) 432-8909
Toll Free: (800) 411-6596
Europe: +44 2392-232392

Downloaded from Arrow.com.

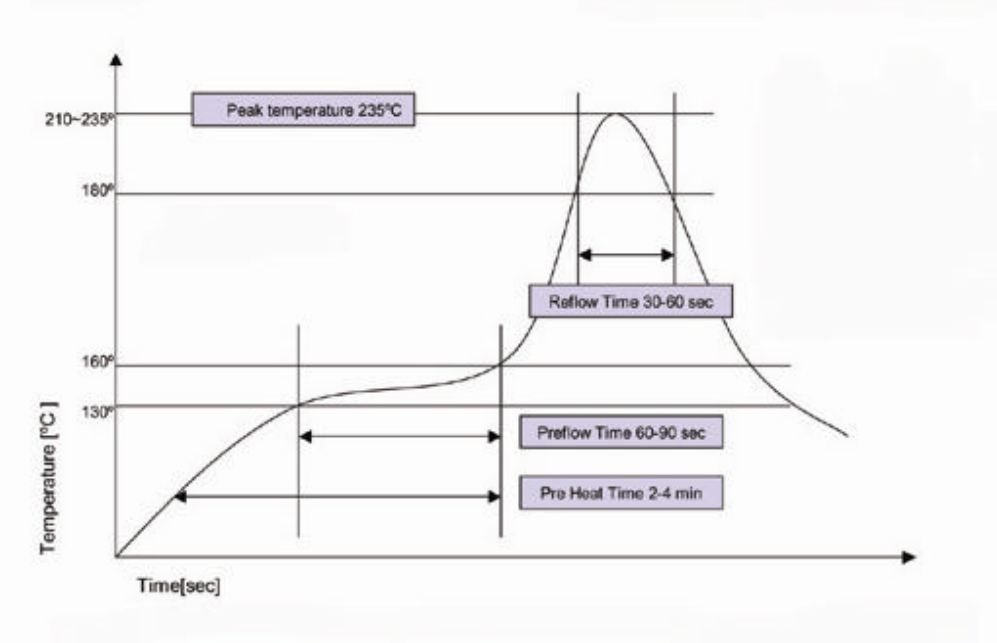

Figure 5 – Low Temperature Solder Reflow Thermal Profile

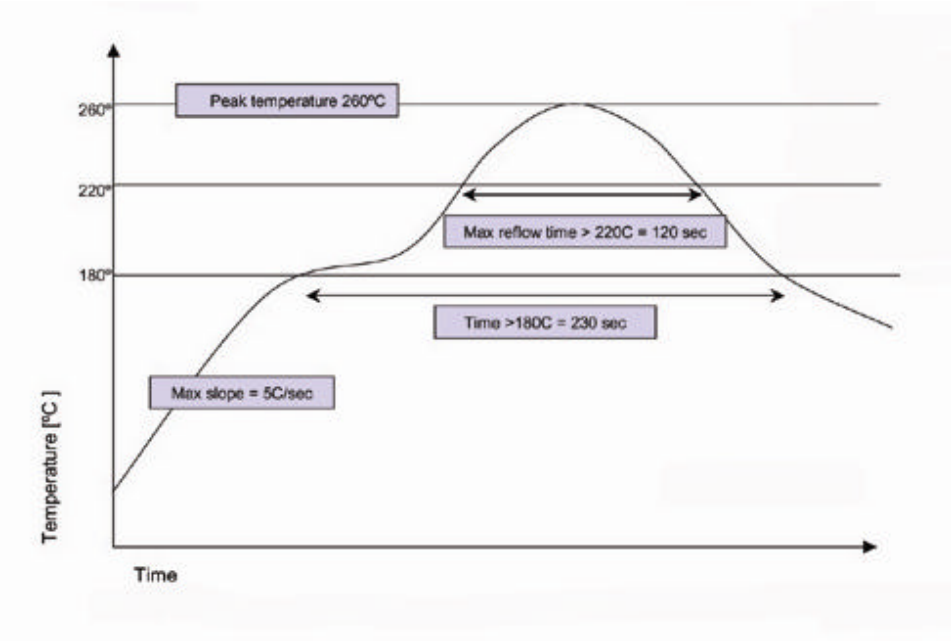

Figure 6 – High Temperature Solder Reflow Thermal Profile

Downloaded from Arrow.com.

Qualification Flow Chart

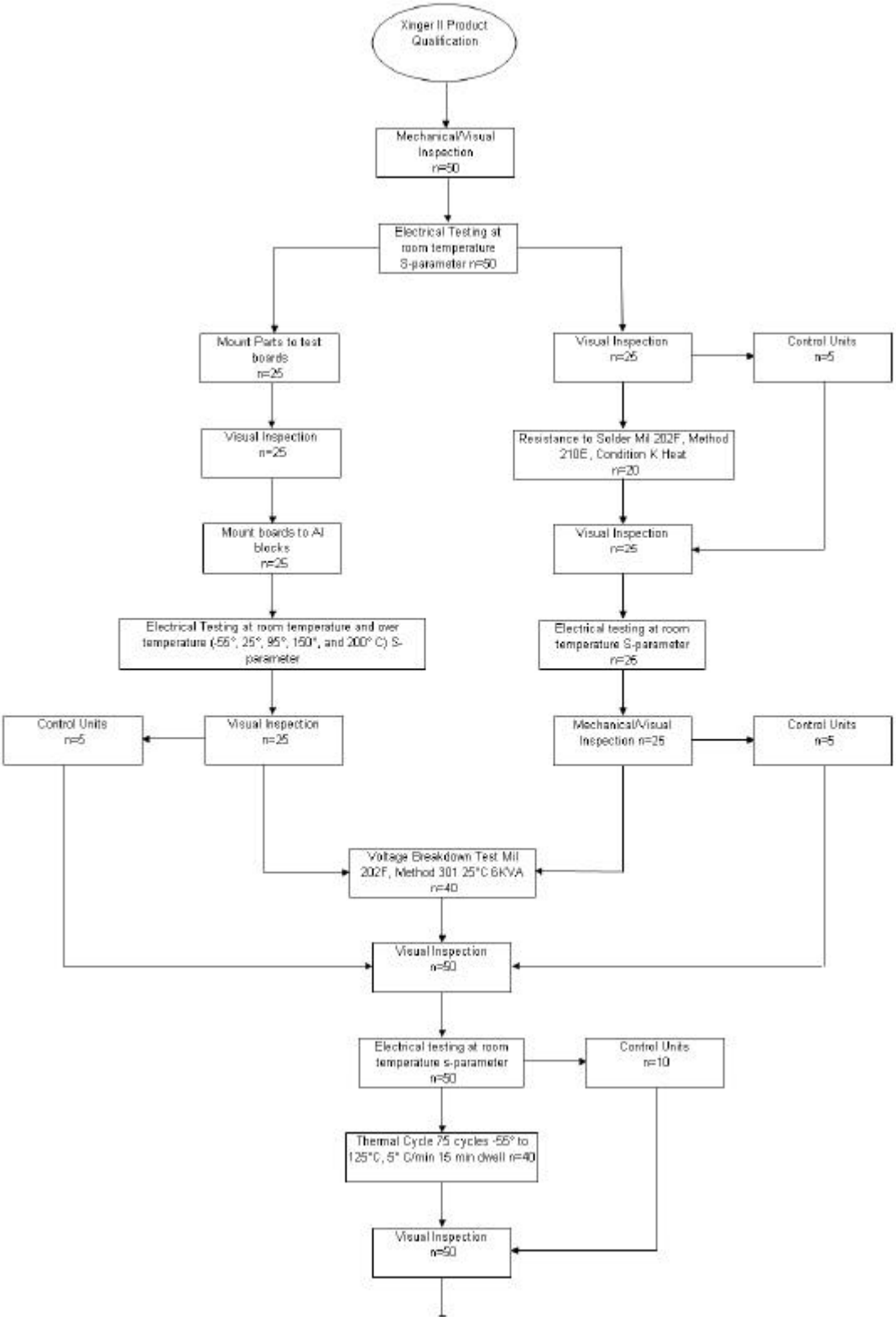



Available on Tape and Reel for Pick and Place Manufacturing.

USA/Canada: (315) 432-8909
Toll Free: (800) 411-6596
Europe: +44 2392-232392

Downloaded from Arrow.com.

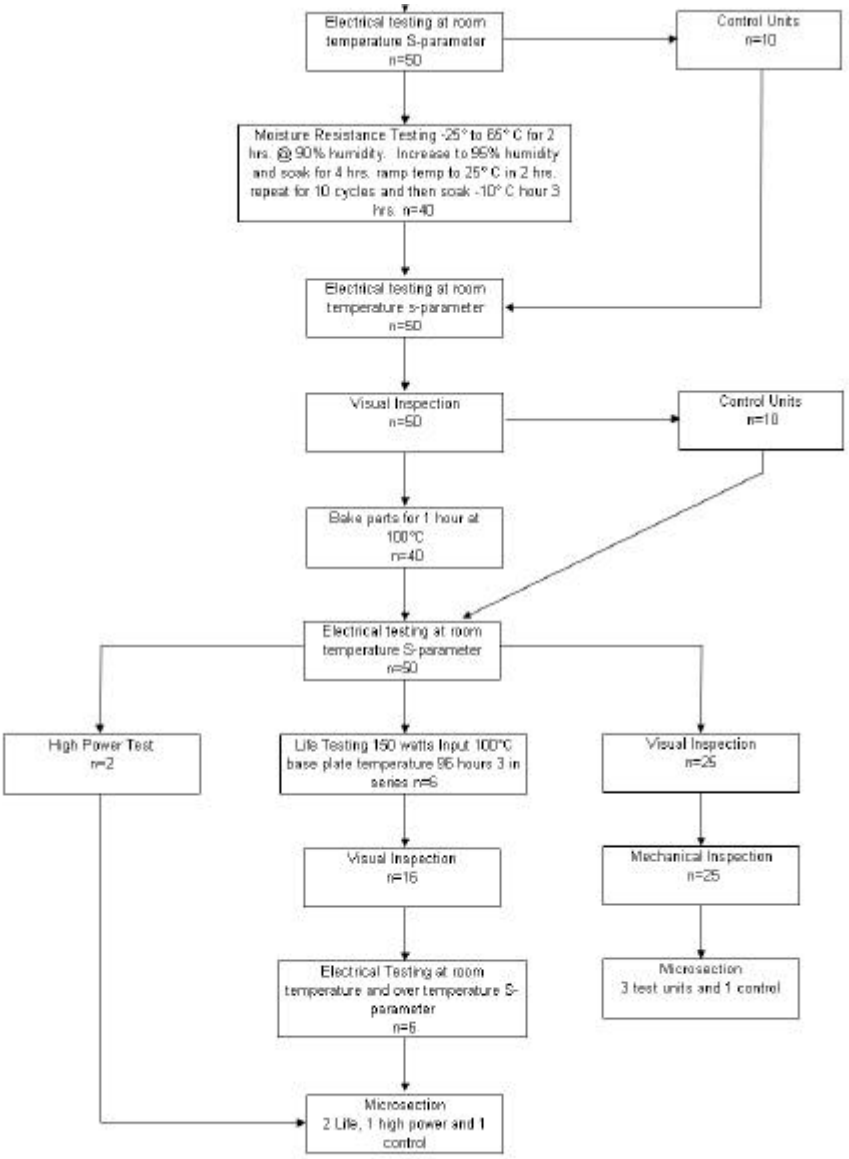

USA/Canada: (315) 432-8909
Toll Free: (800) 411-6596
Europe: +44 2392-232392

Available on Tape and Reel for Pick and Place Manufacturing.



Anaren
What'll we think of next?™

Downloaded from Arrow.com.

Material Declaration **XC0900A-03S** **Immersion Tin Finish**

Material	Weight (lbs)	Weight (g)	(PPM)	CAS Number
2-thiourea	3.1136E-07	1.4123E-04	2.5904E+02	62-56-6
Acetone				67-64-1
Aluminum				7429-90-5
Arsenic	3.7888E-07	1.7186E-04	3.1523E+02	7440-38-2
Brominated Epoxy Resin				68928-70-1
BT Resin				----------
Chromium	7.5777E-08	3.4372E-05	6.3045E+01	7440-47-3
Copper	3.6636E-04	1.6618E-01	3.0481E+05	7440-50-8
EDTA Disodium Salt	3.1136E-08	1.4123E-05	2.5904E+01	139-33-3
Fiberglass				65997-17-3
Fused Silica	5.2998E-04	2.4040E-01	4.4094E+05	60676-86-0
Lead				7439-92-1
Polyimide	3.8418E-05	1.7426E-02	3.1963E+04	60842-76-4
Polyphenylene Ether Resin				----------
PTFE	1.3412E-04	6.0839E-02	1.1159E+05	9002-84-0
Proprietary / Unknown	9.3407E-08	4.2369E-05	7.7713E+01	----------
Sodium Hypophosphite	9.3407E-08	4.2369E-05	7.7713E+01	7681-53-0
Stannous Chloride	3.7363E-08	1.6948E-05	3.1085E+01	----------
Steel				7439-89-6
Tetrafluoroethylene Hexaflouoropropylene copolymer	5.6198E-05	2.5491E-02	4.6756E+04	25067-11-2
Tin	5.6044E-08	2.5422E-05	4.6628E+01	7440-31-5
Titanium Dioxide	7.5777E-05	3.4372E-02	6.3045E+04	13463-67-7
Xylene				1330-20-7
Total Weight Calculated	1.2019E-03	5.4520E-01		
Total Weight Measured	1.1700E-03	5.3071E-01		

The values presented above are estimates at the current revision, and it is derived from vendor supplied data. While Anaren strives for accurate reporting, due to product and process variations at both Anaren and our suppliers, the quoted values are our best estimates only, and not measured absolute values. Product specifications are subject to change without notice.



Downloaded from Arrow.com.

Application Information

The XC0900A-03 is an "X" style 3dB (hybrid) coupler. Port configurations are defined in the table on page 2 of this data sheet and an example driving port 1 is shown below.

Ideal 3dB Coupler Splitter Operation

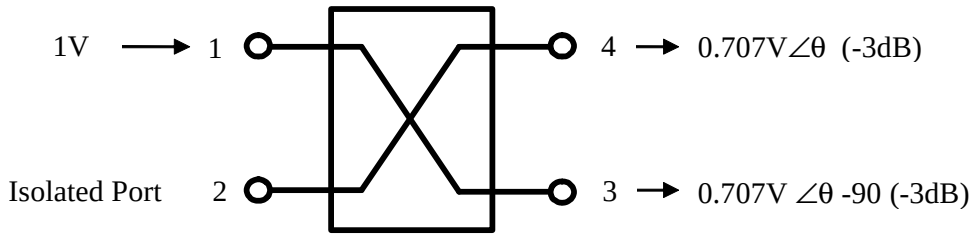

The hybrid coupler can also be used to combine two signals that are applied with equal amplitudes and phase quadrature (90º phase difference). An example of this function is illustrated below.

Ideal 3dB Coupler Combiner Operation

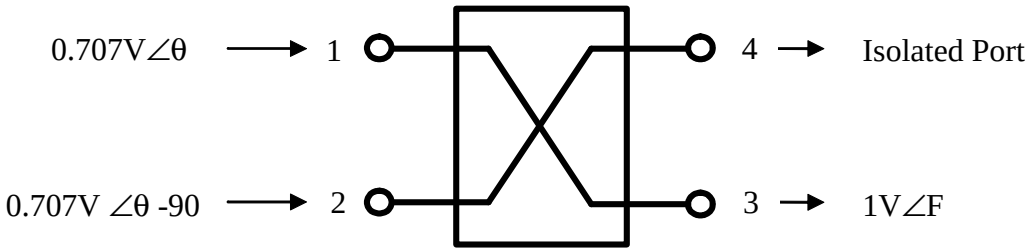

3dB couplers have applications in circuits which require splitting an applied signal into 2, 4, 8 and higher binary outputs. The couplers can also be used to combine multiple signals (inputs) at one output port. Some splitting and combining schemes are illustrated below:

2-Way Splitter/Combiner Network

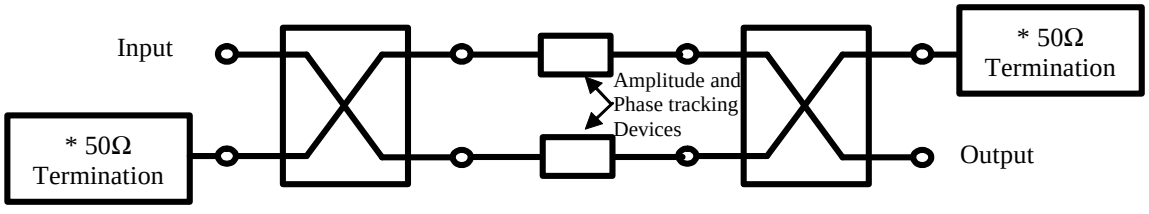

USA/Canada: (315) 432-8909
Toll Free: (800) 411-6596
Europe: +44 2392-232392

Available on Tape and Reel for Pick and Place Manufacturing.



Anaren
What'll we think of next?™

Downloaded from Arrow.com.

4-Way Splitter/Combiner Network

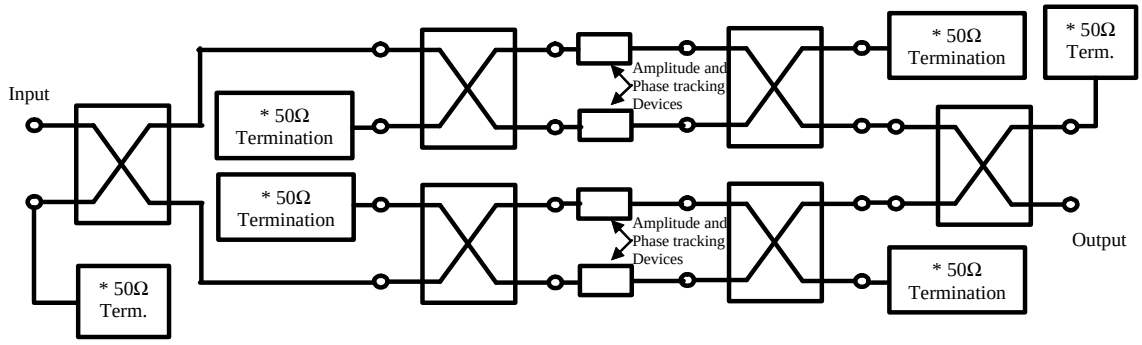

The splitter/combiner networks illustrated above use only 3dB (hybrid) couplers and are limited to binary divisions (2^n number of splits, where *n* is an integer). Splitter/combiner circuits configured this way are known as "corporate" networks. When a non-binary number of divisions is required, a "serial" network must be used. Serial networks can be designed with [3, 4, 5, ….., n] splits, but have a practical limitation of about 8 splits.

A 5dB coupler is used in conjunction with a 3dB coupler to build 3-way splitter/combiner networks. An ideal version of this network is illustrated below. Note what is required; a 50% split (i.e. 3dB coupler) and a 66% and 33% split (which is actually a 4.77dB coupler, but due to losses in the system, higher coupler values, such as 5dB, are actually better suited for this function). The design of this type of circuit requires special attention to the losses and phase lengths of the components and the interconnecting lines. A more in depth look at serial networks can be found in the article "Designing In-Line Divider/Combiner Networks" by Samir Tozin, which describes the circuit design in detail and can be found in the White Papers Section of the Anaren website, www.anaren.com.

3-Way Splitter/Combiner

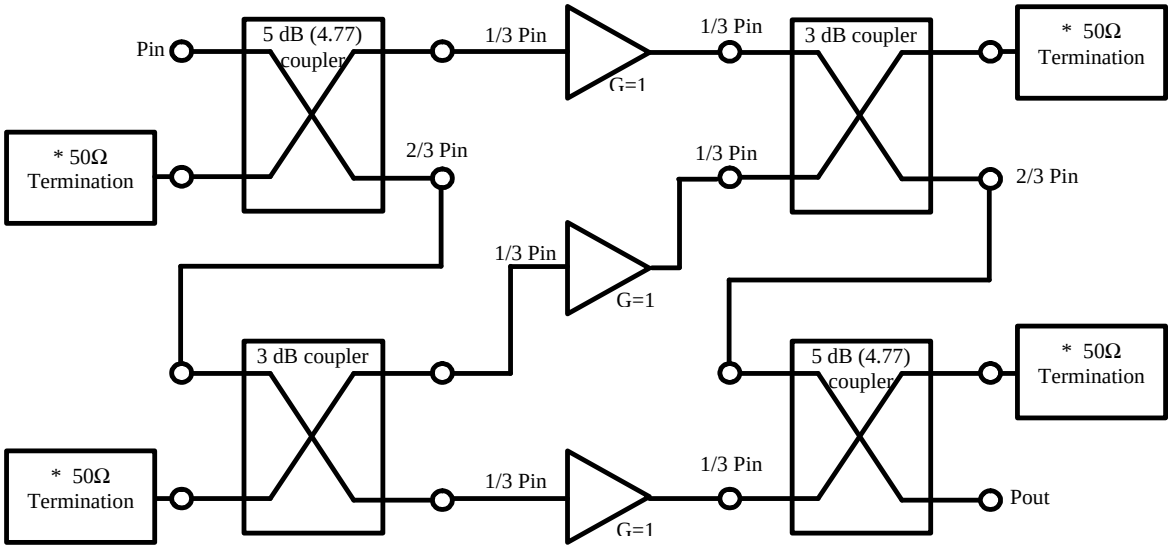

*Recommended Terminations	
Power (Watts)	Model
8	RFP-060120A15Z50
15	RFP-250375A4Z50
50	RFP-375375A6Z50
100	RFP-500500A6Z50



Available on Tape and Reel for Pick and Place Manufacturing.

USA/Canada: (315) 432-8909
Toll Free: (800) 411-6596
Europe: +44 2392-232392

Downloaded from Arrow.com.

Reflections From Equal Unmatched Terminations

Referring to the illustration below, consider the following reflection properties of the 3dB coupler. A signal applied to port 1 is split and appears at the two output ports, ports 3 & 4, with equal amplitude and in phase quadrature. If ports 3 & 4 are not perfectly matched to 50O there will be some signal reflected back into the coupler. If the magnitude and angle of these reflections are equal, there will be two signals that are equal in amplitude and in phase quadrature (i.e. the reflected signals) being applied to ports 3 & 4 as inputs. These reflected signals will combine at the isolated port and will cancel at the input port. So, terminations with the same mismatch placed at the outputs of the 3dB coupler will not reflect back to the input port and therefore will not affect input return loss.

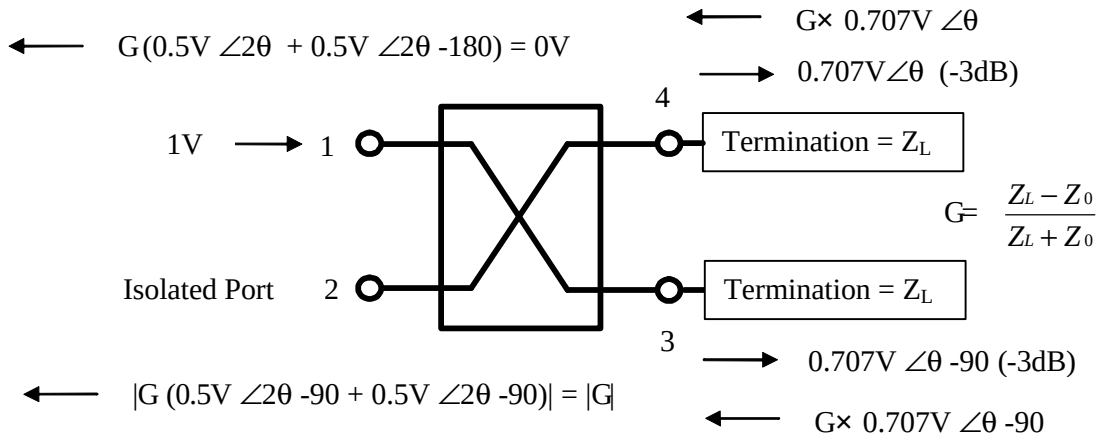

The reflection property of common mismatches in 3dB couplers is very beneficial to the operation of many networks. For instance, when splitter/combiner networks are employed to increase output power by paralleling transistors with similar reflection coefficients, input return loss is not degraded by the match of the transistor circuit. The reflections from the transistor circuits are directed away from the input to the termination at the isolated port of the coupler.

This example is not limited to Power Amplifiers. In the case of Low Noise Amplifiers (LNA's), the reflection property of 3dB couplers is again beneficial. The transistor devices used in LNA's will present different reflection coefficients depending on the bias level. The bias level that yields the best noise performance does not also provide the best match to 50 O. A circuit that is optimized for both noise performance and return loss can be achieved by combining two matched LNA transistor devices using 3dB couplers. The devices can be biased for the best noise performance and the reflection property of the couplers will provide a good match as described above. An example of this circuit is illustrated below:

LNA Circuit Leveraging the Reflection Property of 3dB Couplers

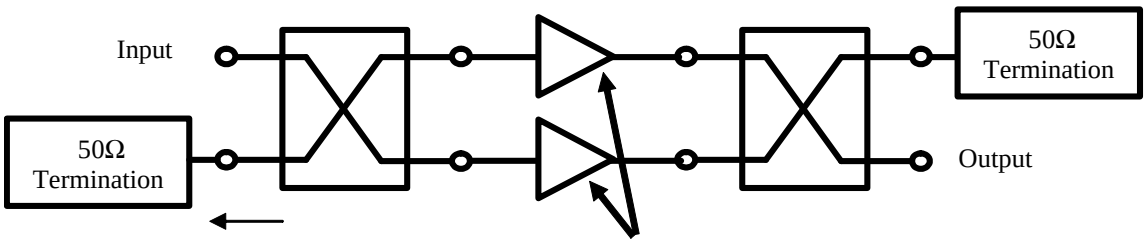

USA/Canada: (315) 432-8909
Toll Free: (800) 411-6596
Europe: +44 2392-232392

Available on Tape and Reel for Pick and Place Manufacturing.



Anaren
What'll we think of next?™

Downloaded from Arrow.com.

Signal Control Circuits Utilizing 3dB Couplers

Variable attenuators and phase shifter are two examples of signal control circuits that can be built using 3dB couplers. Both of these circuits also use the reflection property of the 3dB coupler as described above. In the variable attenuator circuit, the two output ports of a 3dB coupler are terminated with PIN diodes, which are basically a voltage variable resistor at RF frequencies (consult the literature on PIN diodes for a more complete equivalent circuit). By changing the resistance at the output ports of the 3dB coupler, the reflection coefficient, G, will also change and different amounts of energy will be reflected to the isolated port (note that the resistances must change together so that G is the same for both output ports). A signal applied to the input of the 3dB coupler will appear at the isolated port and the amplitude of this signal will be a function of the resistance at the output ports. This circuit is illustrated below:

Variable Attenuator Circuit Utilizing a 3dB Coupler

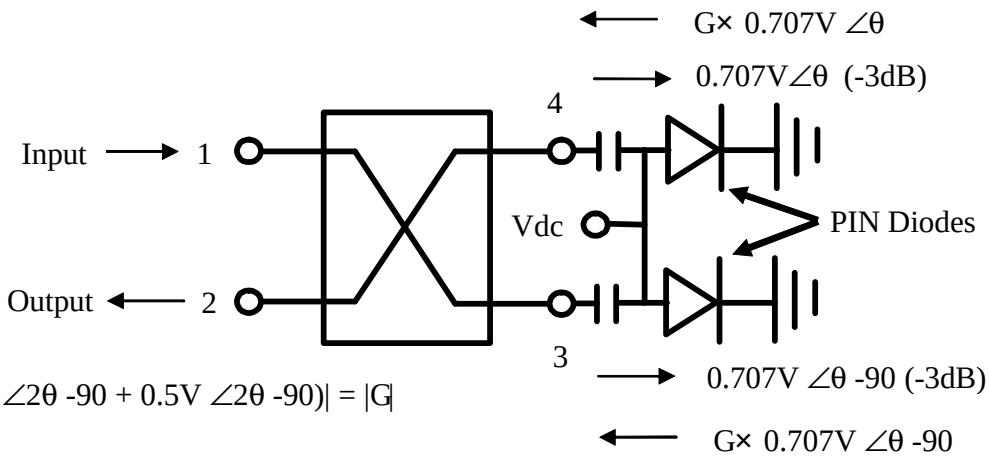

$|G\ (0.5V\ \angle 2\theta\ -90 + 0.5V\ \angle 2\theta\ -90)| = |G|$
and
$|Output| = |G| \times |Input|$

If G=0, no energy is reflected from the PIN diodes and S21 = 0 (input to output). If | G| =1, all of the energy is reflected from the PIN diodes and |S21| = 1 (assuming the ideal case of no loss). The ideal range for G is –1 to 0 or 0 to 1, which translate to resistances of 0O to 50O and 50O to 8 ? respectively. Either range can be selected, although normally 0O to 50O is easier to achieve in practice and produces better results. Many papers have been written on this circuit and should be consulted for the details of design and operation.

Another very similar circuit is a Variable Phase Shifter (illustrated below). The same theory is applied but instead of PIN diodes (variable RF resistance), the coupler outputs are terminated with varactors. The ideal varactor is a variable capacitor with the capacitance value changing as a function of the DC bias. Ideally, the magnitude of the reflection coefficient is 1 for these devices at all bias levels. However, the angle of the reflected signal does change as the capacitance changes with bias level. So, ideally all of the energy applied to port 1, in the circuit illustrated below, will be reflected at the varactors and will sum at port 2 (the isolated port of the coupler). However, the phase angle of the signal will be variable with the DC bias level. In practice, neither the varactors nor the coupler are ideal and both will have some losses. Again, many papers have been written on this circuit and should be consulted for the details of design and operation.



Downloaded from Arrow.com.

Variable Phase Shifter Circuit Utilizing a 3dB Coupler

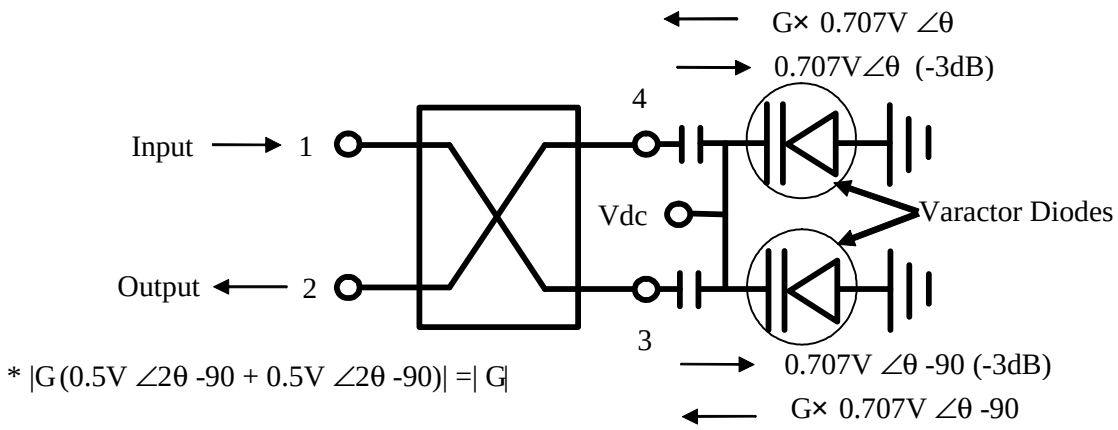

* The phase angle of the signal exiting port 2 will vary with the phase angle of G, which is the reflection angle from the varactor. The varactors must be matched so that their reflection coefficients are equal.

USA/Canada: (315) 432-8909
Toll Free: (800) 411-6596
Europe: +44 2392-232392

Available on Tape and Reel for Pick and Place Manufacturing.

What'll we think of next?™

Downloaded from Arrow.com.

Packaging and Ordering Information

Parts are available in both reel and tube. Packaging follows EIA 481-2. Parts are oriented in tape and reel as shown below. Minimum order quantities are 2000 per reel and 30 per tube. See Model Numbers below for further ordering information.

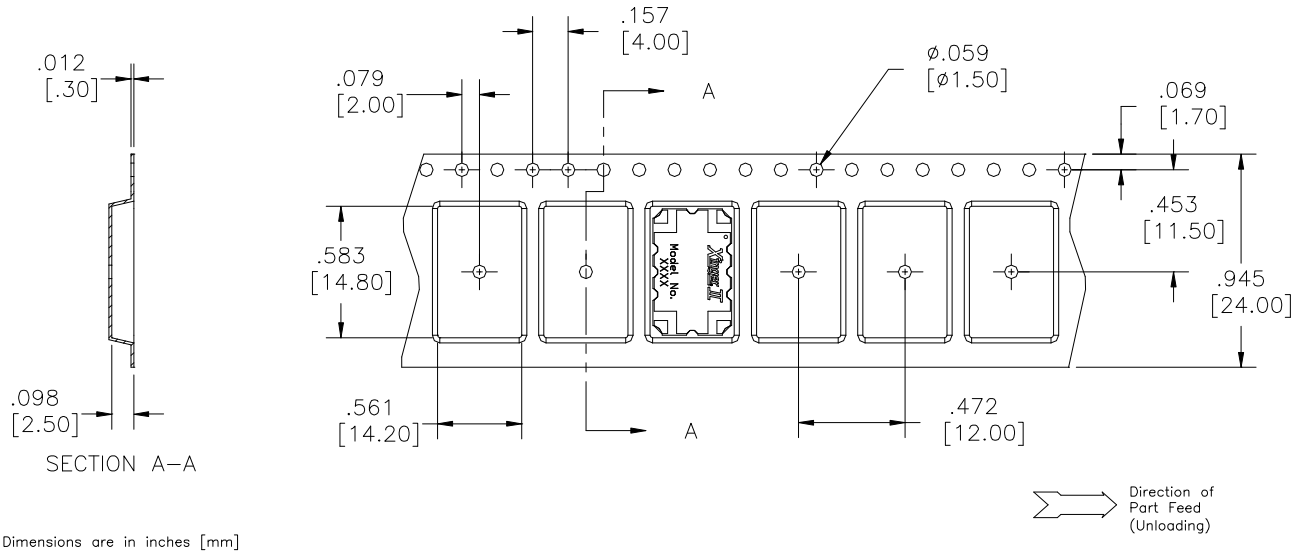

Dimensions are in inches [mm]

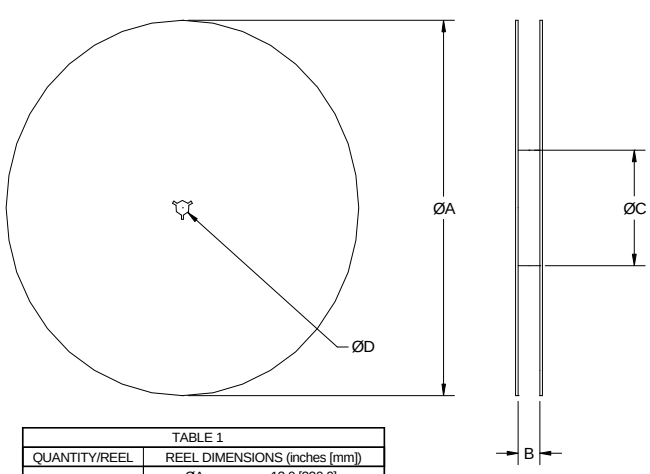

TABLE 1		
QUANTITY/REEL	REEL DIMENSIONS (inches [mm])	
2000	ØA	13.0 [330.0]
	B	0.630 [16.0]
	ØC	4.017 [102.03]
	ØD	0.512 [13.0]

XX XXXX X-XX X X

Xinger Coupler	Frequency	Size	Coupling Value	Plating Finish	Packaging
XC	0450= 410-480MHz 0900= 800-1000MHz 1900=1700-2000MHz 2100=2000-2300MHz	A=0.56"x0.35" B=1.0"x0.5" E=0.56"x0.2" L=0.65"x0.48" T=0.65"x0.48"	03=3dB 05=5dB 10=10dB 20=20dB	P=Tin Lead S=Immersion Tin	T=Tube R=Tape & Reel



Available on Tape and Reel for Pick and Place Manufacturing.

USA/Canada: (315) 432-8909
Toll Free: (800) 411-6596
Europe: +44 2392-232392

Downloaded from Arrow.com.