Coaxial

Power Splitter/Combiner

ZFSC-2-5+

2 Way-0° 50Ω 10 to 1500 MHz



Generic photo used for illustration purposes only

CASE STYLE: K18

Connectors	Model
BNC	ZFSC-2-5+
SMA	ZFSC-2-5-S+
N-TYPE	ZFSC-2-5-N+
BRACKET (OPTION "B")	

+RoHS Compliant

The +Suffix identifies RoHS Compliance. See our web site for RoHS Compliance methodologies and qualifications

Maximum Ratings

Operating Temperature	-55°C to 100°C
Storage Temperature	-55°C to 100°C
Power Input (as a splitter)	1W max.
Internal Dissipation	0.125W max.

Permanent damage may occur if any of these limits are exceeded.

Coaxial Connections

SUM PORT	3
PORT 1	1
PORT 2	2

Features

- wideband, 10 to 1500 MHz
- low insertion loss, 0.5 dB typ.
- high isolation, 30 dB typ.
- excellent amplitude unbalance, 0.1 dB typ.
- excellent phase unbalance, 0.5 deg. typ.
- rugged shielded case

Applications

- cellular
- satellite distribution
- VHF/UHF

Outline Drawing

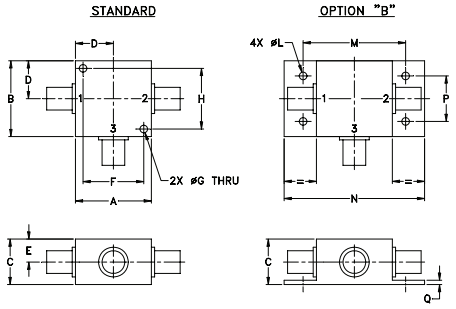

Outline Dimensions (inch / mm)

A	B	C	D	E	F	G	H
1.25	1.25	.75	.63	.38	1.00	.125	1.000
31.75	31.75	19.05	16.00	9.65	25.40	3.18	25.40

J	K	L	M	N	P	Q	wt
--	--	.125	1.688	2.18	.75	.07	grams
--	--	3.18	42.88	55.37	19.05	1.78	70.0

For option B with N-type connectors, dimension "C" increases to 0.94 inches.

Electrical Specifications

FREQ. RANGE (MHz)	ISOLATION (dB)						INSERTION LOSS (dB) ABOVE 3.0 dB						PHASE UNBALANCE (Degrees)			AMPLITUDE UNBALANCE (dB)		
	L		M		U		L		M		U		L	M	U	L	M	U
f_L-f_U	Typ.	Min.	Typ.	Min.	Typ.	Min.	Typ.	Max.	Typ.	Max.	Typ.	Max.	Max.	Max.	Max.	Max.	Max.	Max.
10-1500	25	15	30	20	25	18	0.25	0.6	0.5	1.0	0.8	1.5	2	3	4	0.15	0.20	0.50

L = low range [f_L to 10 f_L] M = mid range [10 f_L to f_U/2] U= upper range [f_U/2 to f_U]

Typical Performance Data

Frequency (MHz)	Total Loss[1] (dB)		Amplitude Unbalance (dB)	Isolation (dB)	Phase Unbalance (deg.)	VSWR S	VSWR 1	VSWR 2
	S-1	S-2						
10.00	3.30	3.31	0.01	30.88	0.08	1.15	1.19	1.19
100.00	3.27	3.27	0.00	31.11	0.07	1.07	1.15	1.15
262.50	3.30	3.33	0.03	26.12	0.05	1.02	1.14	1.14
343.75	3.34	3.36	0.02	26.91	0.18	1.11	1.10	1.10
425.00	3.37	3.38	0.02	25.72	0.06	1.09	1.10	1.11
506.25	3.38	3.38	0.00	24.81	0.01	1.15	1.08	1.08
668.75	3.48	3.47	0.01	27.67	0.14	1.14	1.06	1.05
750.00	3.51	3.51	0.00	25.38	0.08	1.11	1.09	1.10
833.33	3.50	3.50	0.00	29.75	0.03	1.18	1.07	1.07
916.66	3.57	3.59	0.02	29.76	0.38	1.17	1.00	1.08
1000.00	3.65	3.62	0.03	32.57	0.30	1.21	1.06	1.06
1166.66	3.78	3.74	0.04	29.23	0.16	1.17	1.06	1.06
1250.00	3.80	3.77	0.04	32.41	0.32	1.14	1.05	1.05
1333.33	3.88	3.84	0.03	25.84	0.42	1.14	1.08	1.07
1500.00	4.11	4.05	0.06	23.60	0.32	1.12	1.05	1.05

1. Total Loss = Insertion Loss + 3dB splitter loss.

ZFSC-2-5-S+
TOTAL LOSS

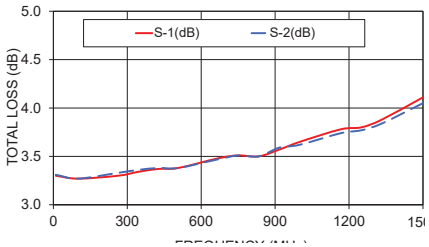

ZFSC-2-5-S+
ISOLATION

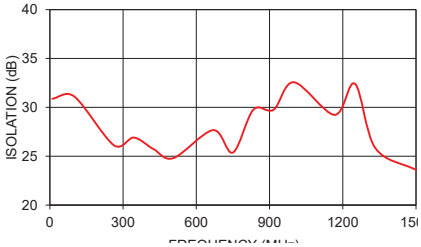

ZFSC-2-5-S+
VSWR

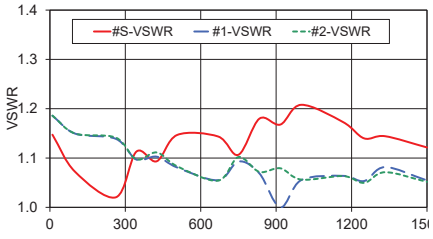

electrical schematic

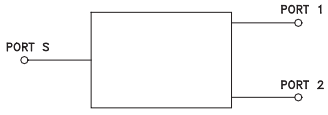

Notes

A. Performance and quality attributes and conditions not expressly stated in this specification document are intended to be excluded and do not form a part of this specification document.

B. Electrical specifications and performance data contained in this specification document are based on Mini-Circuit's applicable established test performance criteria and measurement instructions.

C. The parts covered by this specification document are subject to Mini-Circuits standard limited warranty and terms and conditions (collectively, "Standard Terms"); Purchasers of this part are entitled to the rights and benefits contained therein. For a full statement of the Standard Terms and the exclusive rights and remedies thereunder, please visit Mini-Circuits' website at www.minicircuits.com/MCLStore/terms.jsp