CEL

FreeStar Transceiver Module
ZFSM-101-2

Integrated Transceiver Module for ZigBee/IEEE 802.15.4

NOT RECOMMENDED FOR NEW DESIGNS

DESCRIPTION

CEL's FreeStar Module is a small, fully-integrated, drop-in RF transmission solution that's ideal for ZigBee and other low cost, low power IEEE 802.15.4 RF transmission applications. FreeStar incorporates the MC13202 transceiver IC and MC-9S08GT60 microprocessor from Freescale™ with the Renesas UPG2301TQ Power Amplifier and Inverted-F PCB antenna. It delivers up to 4,000 feet of range and features a streamlined communications protocol that results in the lowest power consumption in transmit mode of any module on the market. The FreeStar is also FCC and CE certified, which eliminates the need for a costly and time-consuming approval process when incorporated into your design.

CEL FreeStar

ZFSM-101-2



- *Transmit Power: 100 mW*
- *Receive Sensitivity: -91 dBm*
- *RF Data Rate: 250 kbps*
- *Based on the Freescale MC13202 transceiver IC*
- *8-bit HCS08-based MCU*

FEATURES

- **Communication Modes:**
  Point-to-Point, Point-to Multipoint, Mesh Networking
- **4,000+ feet line of sight performance**
- **Small form factor:**
  1.4" x 1.0"
- **Integrated PCB Trace Antenna**
- **FCC, IC, and CE Certified**
- **RoHS Compliance**
- **Direct Sequence Spread Spectrum**
- **CSMA-CA**
- **Wireless boot loader**
- **Flash-based/upgradable**
- **10 Bit A/D (2 inputs)**
- **General Purpose I/O (8 ports)**
- **Microsoft® Windows® -based Configuration and Test Tool**
- **Simple Serial UART Interface**
- **Over 65,000 network addresses**

APPLICATIONS

Residential & Commercial Automation
- Lighting control
- Security
- Access control
- Heating, ventilation, air-conditioning (HVAC)
- Automated meter reading (AMR)

Industrial Controls
- Asset tracking and monitoring
- Homeland security
- Process management
- Environmental monitoring & control
- Heating, ventilation, air-conditioning (HVAC)
- Automated meter reading (AMR)

Health Care
- Patient monitoring
- Fitness monitoring

Consumer
- Human interface devices (keyboard, mice, etc.)
- Remote control
- Wireless toys

This FreeStar (ZFSM-101-2) datasheet is based on the Freescale MC13202 transceiver IC. It replaces the old FreeStar (ZFSM-101-1) datasheet that was based on the Freescale MC13192 transceiver IC. This datasheet also highlights the changes made when migrating from the MC13192 (now obsolete) to the MC13202 transceiver IC.

ORDERING INFORMATION

Part Number	Order Number	Description	Mins/Mults	Status
FreeStar ZFSM-101-2	ZFSM-101-2	FreeStar 100mW transceiver module PCB Trace Antenna with / Freescale MC13202	200 pcs / 200 pcs	Not Recommended For New Design
	ZFSM-101-2-B	FreeStar 100mW transceiver module PCB Trace Antenna with / Freescale MC13202 Bulk (1 tray)	50 pcs / 50 pcs	
	ZFSM-101-KIT-1	100mW Freestar Module Kit Freescale MC13192	1	

NOT RECOMMENDED FOR NEW DESIGNS

MODULE BLOCK DIAGRAM

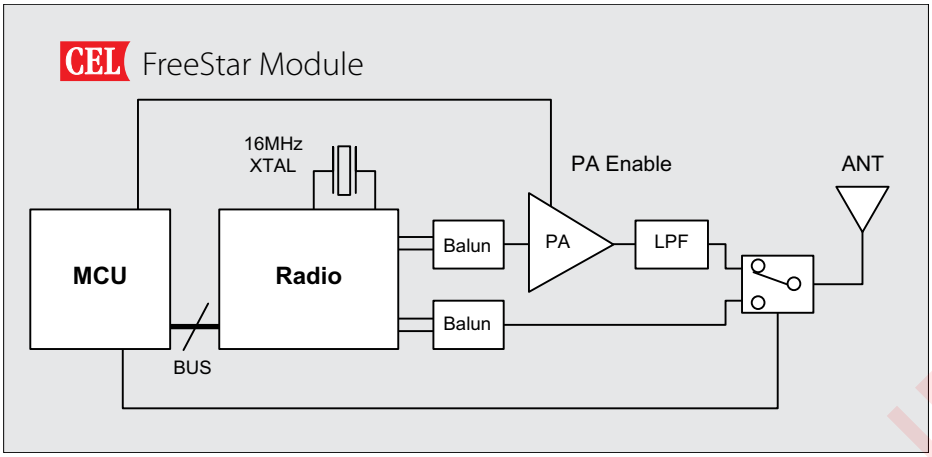

DEVELOPMENT KIT (LIMITED AVAILABILITY)

CEL's Development Kit assist users in both evaluation and development. As a stand-alone radio system, the kit allows users to place the modules into the target environment and evaluate performance on-site. The Development Kit also serves as an invaluable aid in application development. Through the many interface headers on the board, the user has access to all of the module pins, enabling easy connection to target systems for application development.

The interface board features a serial communication interface, a power management module, and peripherals such as a buzzer, push-button switches, LEDs and GPIO headers.

For more detailed information regarding these Development Kits, refer to the respective Development Kit user guides documents. (Available at CEL's website: **www.cel.com/MeshConnect**)

FreeStar ZFSM-101-1 Kit is based on the MC13192 transceiver IC (Limited Availability).



To order a Development Kit, please contact your nearby CEL sales office or representatives.

NOT RECOMMENDED FOR NEW DESIGNS

TABLE OF CONTENTS

Introduction and Overview

Description 1
Features 1
Applications 1
Ordering Information 2
Module Block Diagram 3
Development Kit 3

System Level Function

Transceiver IC 5

Software

Required Software Changes 5
MAC and PHY Changes 5

Electrical Specification

Absolute Maximum Ratings 6
Recommended (Operating Condition) 6
Electrical Characteristics 7
Typical Transmit Power vs. Power Setting 7

Pin Signal & Interfaces

Pin Definitions 8
Connector Legend 9
Connector Configuration 9
Radiation Patterns 10
Example Interface Diagrams 12
Module Dimensions 13
Module Footprint 13
Module Keepouts 14

Processing 15

Quality 16

Agency Certifications 17

Shipment, Storage & Handling 17

References & Revision History 18

NOT RECOMMENDED FOR NEW DESIGNS

TRANSCEIVER IC

The FreeStar ZFSM-101-2 module (MC13202 based module) replaces the ZFSM-101-1 module (MC13192 based module). The key differences between the MC1319x series and the MC1320x series are the addition of an internal transmit/receive (TR) switch to the MC1320x design and some receiver design changes that require a few register setting changes for optimal performance.

Default condition of T/R switch is disabled; this is controlled by a register that was previously unreserved (register 0x07, bits 12, 13, 14)

SOFTWARE REVISIONS

Required Software Changes

- The MC1320x series devices include a transmit/receive switch that is not included on the MC1319x series devices. The default setting is for the switch not to be enabled, so no change in software is required.
- Changing to the MC1320x requires different register settings as follows:

    1. PSM_Mode Register 0x31 shoud be programmed to 0xA0C0 (normal operation) - this register is described in the MC1320x Reference Manual as reserved except for the 3-bit psm_tm[2:0] field located at bit PSM_Mode[5:3]. This field uses a value of 0b000 for normal operation and a value of 0b0001 for RF test (modular disabled). The MC13202 now requires that reserved bits PSM_Mode[7:6] be over-written to 2b11, and as a result, the new program values are : a) 0xA0C0 for normal operation, and b) 0xA0C8 for modulator disabled test.

    2. Register 0x34 should be programmed to value 0xFEC6 - this is a reserved hidden register that trims radio parameters, and the default value must be over-written.

- It is not required that the software project be upgraded to one of Freescles's new codebases and no other changes are required.

MAC and PHY Changes

PHY_HW_Setup.c changes:
Removed these two lines in static const uint8_t setupAddrTable[]
// ABEL_CONTROL2_REG,// Abel 2.2 only
// ABEL_reg9, // Abel 2.2 only
Removed these two lines in static const uint16_t setupValueTable[]
// 0x7D3C, // For Abel 2.2 only
// 0xF3FD, // For Abel 2.2 only
Redefined the mask to make sure the register is initialized correctly. Changes made in static const uint16_t setupValueTable[]
//#define tmp1 (0x7c00 | cABEL2SPI_MASK | cUSE_STRM_MODE)
#define tmp1 (0x0c00 | cABEL2SPI_MASK | cUSE_STRM_MODE)
In function void WakeUpIsr(void), redefined the mask to make sure the register is initialized correctly.
//ctrl2val=0x7c00 | cABEL2SPI_MASK | cUSE_STRM_MODE;
ctrl2val=0x0c00 | cABEL2SPI_MASK | cUSE_STRM_MODE;

radioMAC.c changes:
Added following definitions.
#define PSM_REG 0x31
uint u16PSM_reg_TEST = 0xA0C0;
unsigned short u16Reg7Init = 0;
In function PRIVATE uchar RadioMAC_802_15_4_LowLevelInit(void) after InitializePhy();
function call added the following to make sure the register is initialized correctly:
SPIDrvWrite(PSM_REG,0xA0C0);
SPIDrvWrite(0x34,0xFEC6);

NOT RECOMMENDED FOR NEW DESIGNS

ANTENNA

FreeStar modules include an integrated PCB trace antenna. The PCB antenna employs an F-Antenna topology that is compact and supports an omni-directional radiation pattern. To maximize antenna efficiency, an adequate ground plane must be provided on the host PCB.

The following will significantly contribute to antenna performance:
- The position of the module on the host board
- The position of the ground plane on the host board under the module
- Overall design of product enclosure

Poor design affects radiation patterns and can result in reflection, diffraction and/or scattering of the transmitted signal.

Here are some design guidelines to help ensure antenna performance:

- Never place the ground plane or route copper traces directly underneath the antenna portion of the module
- Never place the antenna close to metallic objects
- In the overall design, ensure that wiring and other components are not placed near the antenna
- Do not place the antenna in a metallic or metallized plastic enclosure
- Keep plastic enclosures 1cm or more from the antenna in any direction

ABSOLUTE MAXIMUM RATINGS

Rating	Value	Unit
Power Supply Voltage	3.6	Vdc
RF Input Power	+10	dBm
Storage Temperature Range	-55 to 125	ºC

RECOMMENDED OPERATING CONDITIONS

Characteristic	Min	Typ	Max	Unit
Power Supply Voltage (Vdd)	2.8	3.3	3.6	Vdc
Input Frequency	2405		2480	MHz
Ambient Temperature Range	-40	25	85	ºC
Logic Input Low Voltage	0		30% Vdd	V
Logic Input High Voltage	70% Vdd		Vdd	V

NOT RECOMMENDED FOR NEW DESIGNS

ELECTRICAL CHARACTERISTICS

Parameter		Min	Typ	Max	Unit
General Characteristics					
RF Frequency Range		2400		2483.5	MHz
Output power (Software controlled)		1		100	mW
Receiver Sensitivity @ 1% PER			-91		dBm
RF Data Rate			250		kbps
Host Data Rate			19.2		kbps
Voltage Operating Range		2.8		3.6	V
General Purpose Digital I/O (8 Pins)				8	pins
RF Channels (channel 16 is set at a reduced power level)				16	channels
DC Electrical Characteristics					
Power Supply Current (Vdd) = 3.3V, @ 25°C	Transmit Mode 100mW		165		mA
	Receive Mode		50	55	mA
	Standby Mode			15	uA
Output High Voltage (All digital outputs)		80% Vdd		Vdd	V
Output Low Voltage (All digital outputs)		0		20% Vdd	V
AC Electrical Characteristics					
Sensitivity for 1% packet error rate (-40 to +85ºC)		–	-91		dBm
Sensitivity for 1% packet error rate (25ºC)		–	-91	-89	dBm
Saturation (maximum input level)			10		dBm
Nominal Output Power			20		dBm
Output Power Control Range (+20 to 0 dBm)			20		dB
Error Vector Magnitude (RMS EVM)				35	%
Over the Air Data Rate			250		kbps
On-board antenna gain (peak)			0.8		dBi
On-board antenna gain (average)			-3.1		dBi

TYPICAL TRANSMIT POWER VS. POWER SETTING

Power Setting	Output Power
>= 30	19.8 dBm
28	19.8 dBm
26	19.8 dBm
24	19.2 dBm
22	17.6 dBm
20	17.2 dBm
18	16.8 dBm
16	16.3 dBm
14	10.8 dBm
12	10.4 dBm
10	9.8 dBm
8	9.2 dBm
6	2.7 dBm
4	2.3 dBm
2	1.9 dBm
0	1.5 dBm

NOT RECOMMENDED FOR NEW DESIGNS

PIN DEFINITIONS

PIN	TYPE	SIGNAL NAME	ELECTRICAL DESCRIPTION
ANT2	AO/AI	ANT2	INTEGRATED PBC F-ANTENNA
TPRF1	AO/AI	TPRF1	COAXIAL RF TEST POINT – 50 OHMS
1	GND	GND	GROUND
2	GND	GND	GROUND
3	GND	GND	GROUND
4	GND	GND	GROUND
5	DI/DO	PTD3	GENERAL PURPOSE DIGITAL I/O FIRMWARE CONFIGURABLE, PORT D , BIT 3
6	DI/DO	PTD4	GENERAL PURPOSE DIGITAL I/O FIRMWARE CONFIGURABLE, PORT D , BIT 4
7	AI	PTB0	ANALOG TO DIGITAL CONVERTER INPUT, PORT B , INPUT 0
8	AI	PTB1	ANALOG TO DIGITAL CONVERTER INPUT, PORT B , INPUT 1
9	PI	VCC	PRIMARY POWER INPUT: VCC = 2.4 TO 3.6 VDC
10	GND	GND	GROUND
11	DI	MODE0	FCC / PRODUCTION TEST MODE INPUT WORD, BIT 0
12	DI	MODE1	FCC / PRODUCTION TEST MODE INPUT WORD, BIT 1
13	DI	MODE2	FCC / PRODUCTION TEST MODE INPUT WORD, BIT 2
14	DI/DO	PTA4	GENERAL PURPOSE DIGITAL I/O FIRMWARE CONFIGURABLE PORT A, BIT 4, KBI1P4 (KEYBOARD INTERRUPT)
15	DI/DO	PTA5	GENERAL PURPOSE DIGITAL I/O FIRMWARE CONFIGURABLE PORT A, BIT 5, KBI1P5 (KEYBOARD INTERRUPT)
16	DI/DO	PTA6	GENERAL PURPOSE DIGITAL I/O FIRMWARE CONFIGURABLE PORT A, BIT 6, KBI1P6 (KEYBOARD INTERRUPT)
17	DI	PTA7	DIGITAL INPUT CONFIGURED TO INTERRUPT ON RISING EDGE OF SIGNAL TO WAKE UP MODULE FROM SLEEP MODE. PORT A, BIT 7, KBI1P7 (KEYBOARD INTERRUPT)
18	DI/DO	PTGO	PORT G, BIT 0, BKGD/MS (BACKGROUND/MODE SELECT, FOR PROGRAMMING AND FIRMWARE DEBUG
19	DI/DO	/RESET[1]	MASTER RESET, ACTIVE LOW
20	DI/DO	PTC0	GENERAL PURPOSE DIGITAL I/O FIRMWARE CONFIGURABLE PORT C, BIT 0, SCI2 TXD2 (SERIAL COMMUNICATION INTERFACE 2, TRANSMIT DATA)
21	DI/DO	PTC1	GENERAL PURPOSE DIGITAL I/O FIRMWARE CONFIGURABLE PORT C, BIT 1, SCI2 RXD2 (SERIAL COMMUNICATION INTERFACE 2, RECEIVE DATA)
22	DI/DO	PTC5	RESERVED
23	DO	TXD	APPLICATION TRANSMIT DATA OUTPUT (SCI1, TXD1)
24	DI	RXD	APPLICATION RECEIVE DATA INPUT (SCI1, RXD1)
25	GND	GND	GROUND
26	GND	GND	GROUND
27	GND	GND	GROUND
28	GND	GND	GROUND
29	GND	GND	GROUND
30	GND	GND	GROUND

Note: [1] Use an Open Collector Output to Drive the Reset pin or put a 1k Ohm resistor in series with the driving source. Normally the reset pin is an output; however under brown out and other reset conditions the Freescale microcontroller will drive the pin low.

NOT RECOMMENDED FOR NEW DESIGNS

CONNECTOR LEGEND

TYPE	DEFINITION
DI	DIGITAL INPUT
DO	DIGITAL OUTPUT
AI	ANALOG INPUT
AO	ANALOG OUTPUT
PI	POWER INPUT
GND	GROUND
LOGIC INPUT HIGH	$0.7\ (V_{CC}) < V_{IH} < (V_{CC})$
LOGIC INPUT LOW	$0 < V_{IL} < 0.3\ (V_{CC})$
LOGIC OUTPUT HIGH	$(V_{CC} - 0.8) < V_{OH} < V_{CC}$
LOGIC OUTPUT LOW	$0 < V_{OL} < 0.2\ (V_{CC})$

CONNECTOR CONFIGURATION

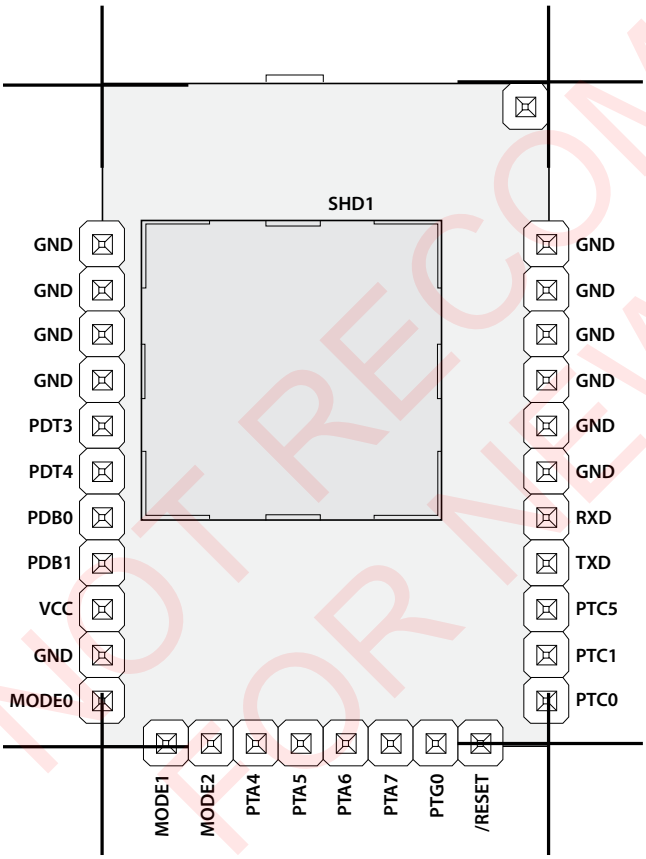

NOT RECOMMENDED FOR NEW DESIGNS

Note: The PIN Numbering begins at top left-hand side with pin number 1 and follows counter-clockwise about the perimeter of the module.

RADIATION PATTERNS

FreeStar Rev B 2440 MHz			
Device Orientation	**Polarization**	**Gain (dB)**	
		Max	**Avg**
(V)	vertical	0.60	-1.72
(V)	horizontal	-7.27	-12.37
(H)	vertical	-4.00	-10.91
(H)	horizontal	0.02	-5.90
(F)	vertical	-6.62	-13.52
(F)	horizontal	0.85	-4.67
Toatal Avg. Gain (dB)		-3.15	



Vertical

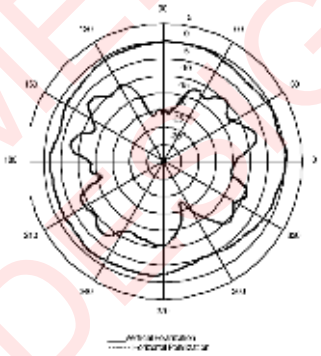



Horizontal

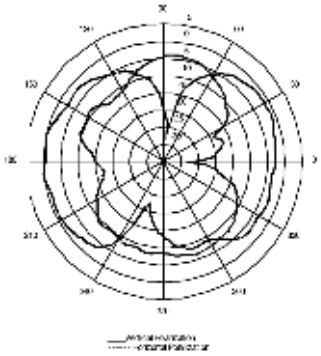



Flat

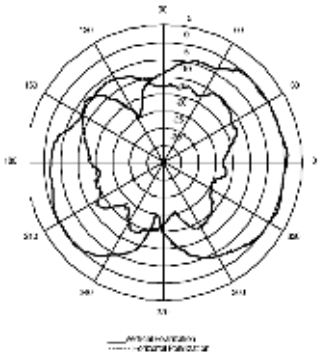

NOT RECOMMENDED FOR NEW DESIGNS

EXAMPLE INTERFACE DIAGRAMS

Sample Connection Diagram when Using Serial Interface

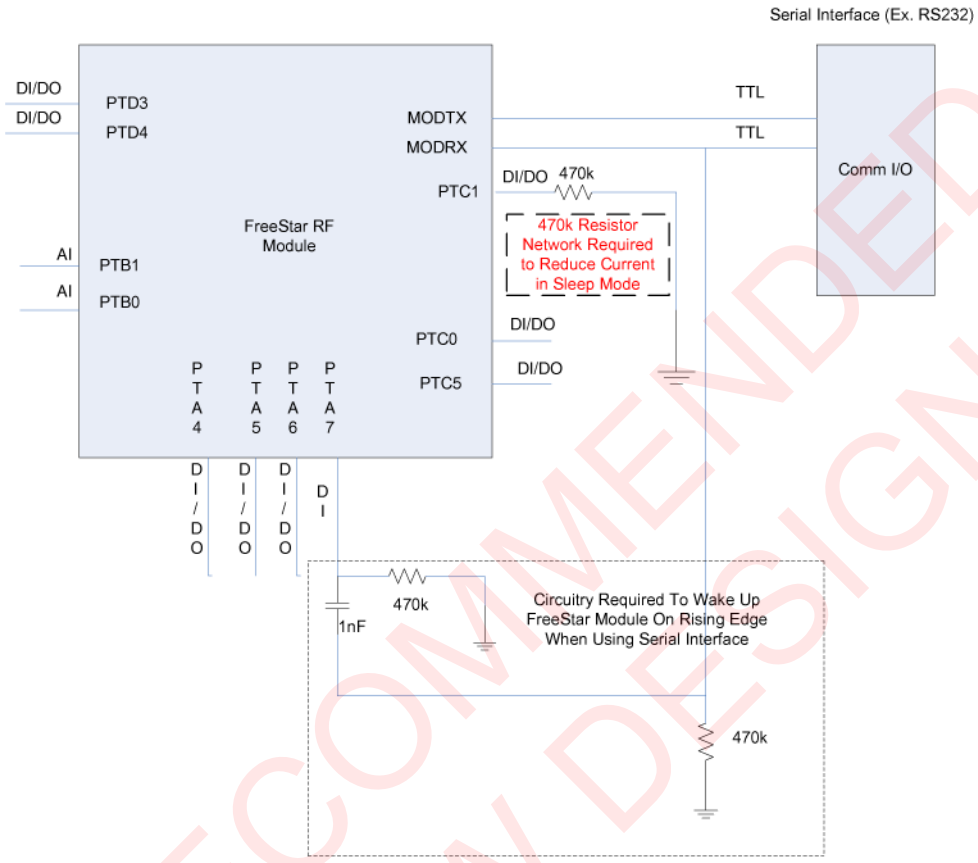

Sample Connection Diagram when Using Host Processor Interface

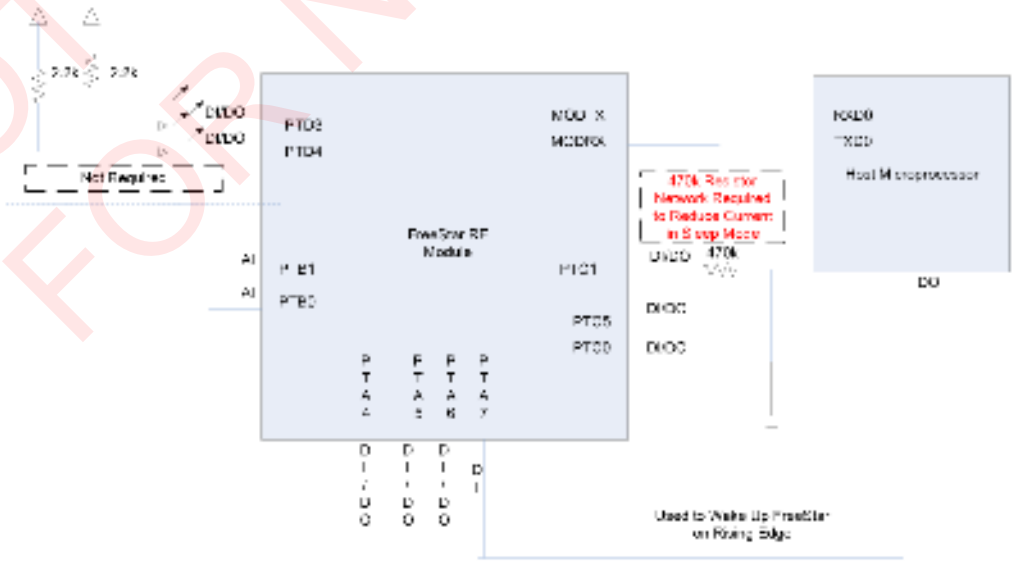

NOT RECOMMENDED FOR NEW DESIGNS

MODULE DIMENSIONS

Note: Unless otherwise specified, dimensions are in Inches [mm].

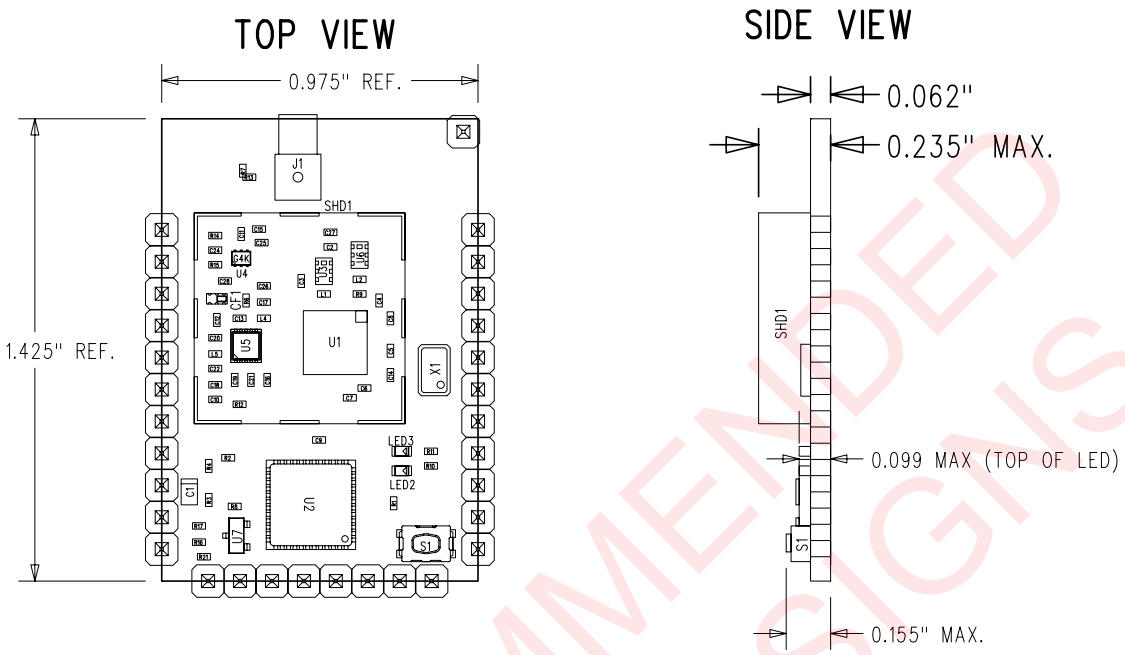

PCB FOOTPRINT

Note: Unless otherwise specified, dimensions are in Inches [mm].

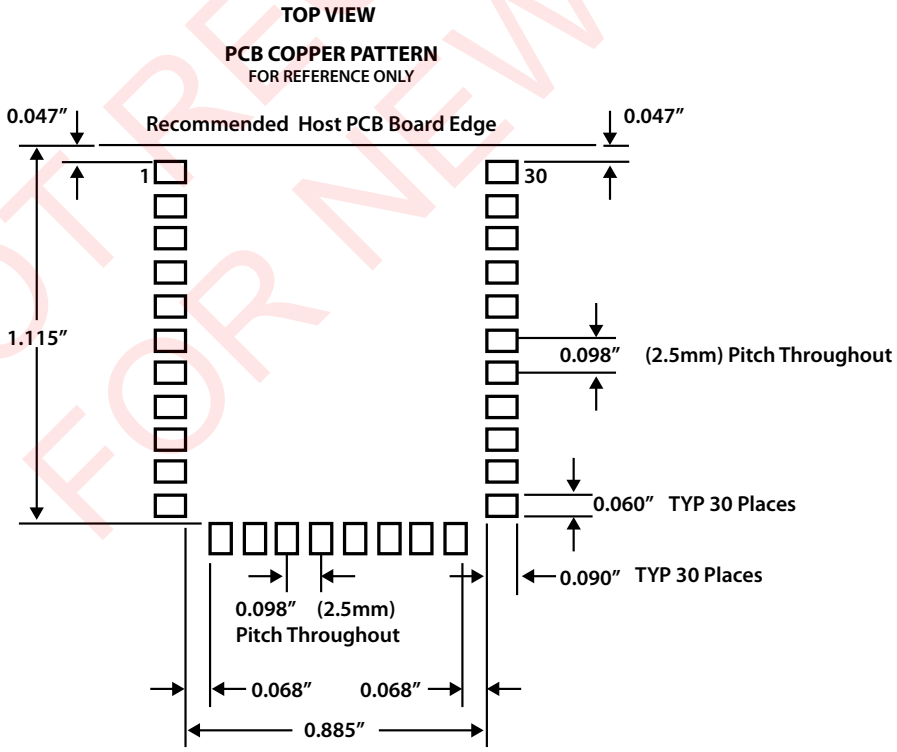

NOT RECOMMENDED FOR NEW DESIGNS

MODULE KEEPOUTS

Note: Unless otherwise specified, dimensions are in Inches [mm].

Module - Dimensions and Keepouts

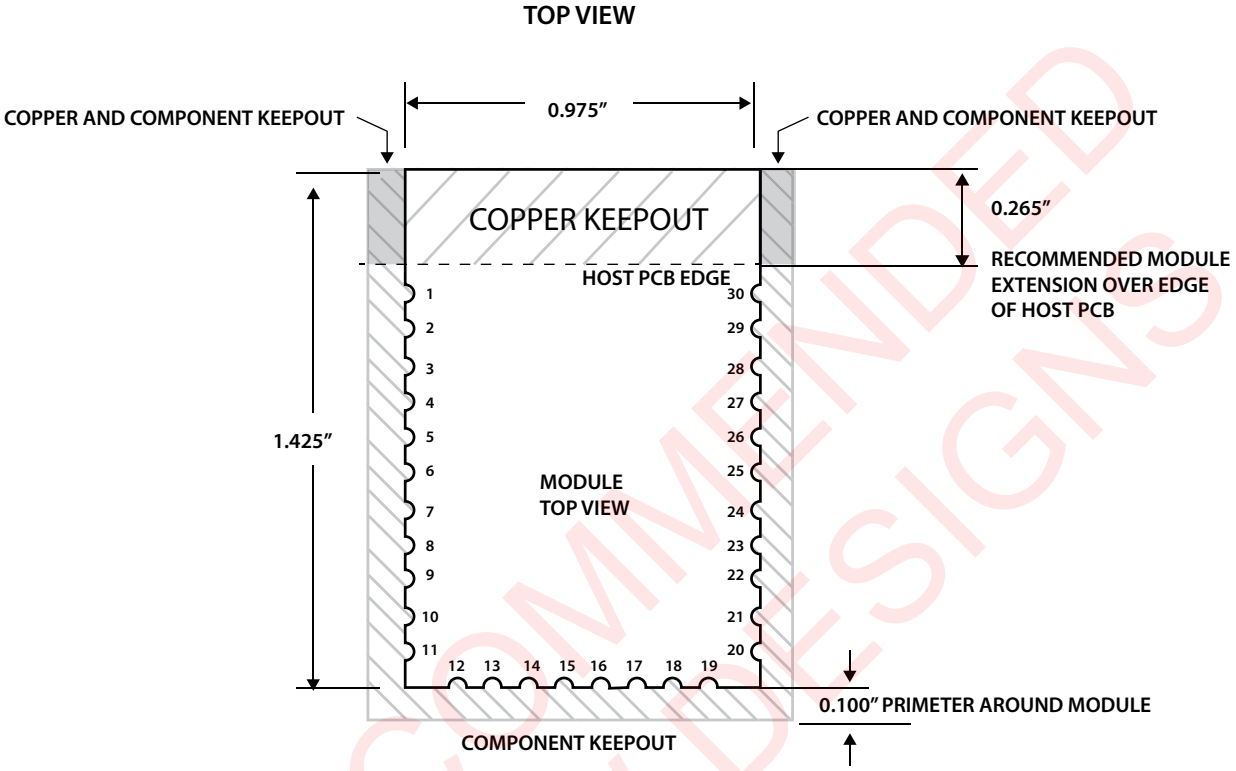

COPPER AND COMPONENT KEEPOUT AREA
- NO COPPER/TRACES ALLOWED ON ANY LAYER OF HOST PCB IN THIS AREA
- NO COMPONENTS ON EITHER TOP OR BOTTOM SIDES OF HOST PCB ALLOWED WITHIN 0.100″ OF MODULE

COMPONENT KEEPOUT - NO HOST BOARD PERIPHERAL COMPONENTS ALLOWED WITHIN 0.100″ OF MODULE

IF OVER HANG METHOD OF MOUNTING IS NOT USED
- NO COMPONENTS ON EITHER TOP OR BOTTOM SIDES OF HOST PCB ALLOWED IN THIS AREA
- NO COPPER/TRACES ALLOWED ON ANY LAYER OF HOST PCB IN THIS AREA

NOT RECOMMENDED FOR NEW DESIGNS

PROCESSING

Recommended Reflow Profile

Parameters Values	
Ramp up rate (from Tsoakmax to Tpeak)	3°/sec max
Minimum Soak Temperature	150°C
Maximum Soak Temperature	200°C
Soak Time	60-120 sec
TLiquidus	217°C
Time above TL	60-150 sec
Tpeak	250°C
Time within 5° of Tpeak	20-30 sec
Time from 25° to Tpeak	8 min max
Ramp down rate	6°C/sec max

Pb-Free Solder Paste

Use of “No Clean” solder paste is strongly recommended, as it does not require cleaning after the soldering process.

Note: The quality of solder joints on the castellations (‘half vias’) where they contact the host board should meet the appropriate IPC Specification. See the latest **IPC-A-610** Acceptability of Electronic Assemblies, Castellated Terminations section.

Cleaning

In general, cleaning the populated modules is strongly discouraged. Residuals under the module cannot be easily removed with any cleaning process.

- Cleaning with water can lead to capillary effects where water is absorbed into the gap between the host board and the module. The combination of soldering flux residuals and encapsulated water could lead to short circuits between neighboring pads. Water could also damage any stickers or labels.
- Cleaning with alcohol or a similar organic solvent will likely flood soldering flux residuals into the two housings, which is not accessible for post-washing inspection. The solvent could also damage any stickers or labels.
- Ultrasonic cleaning could damage the module permanently.

The best approach is to consider using a “No Clean” solder paste and eliminate the post-soldering cleaning step.

Optical Inspection

After soldering the Module to the host board, consider optical inspection to check the following:

- Proper alignment and centering of the module over the pads.
- Proper solder joints on all pads.
- Excessive solder or contacts to neighboring pads, or vias.

Repeating Reflow Soldering

Only a single reflow soldering process is encouraged for host boards.

Wave Soldering

If a wave soldering process is required on the host boards due to the presence of thru hole components, only a single wave soldering process is encouraged.

NOT RECOMMENDED FOR NEW DESIGNS

PROCESSING *(Continued)*

Hand Soldering

Hand soldering is possible. When using a soldering iron, follow IPC recommendations (reference document IPC-7711)

Rework

The module can be unsoldered from the host board. Use of a hot air rework tool should be programmable and the solder joint and module should not exceed the maximum peak reflow temperature of 250 ºC.

Caution

If temperature ramps exceed the reflow temperature profile, module and component damage may occur due to thermal shock. Avoid overheating.

Warning

Never attempt a rework on the module itself, (e.g. replacing individual components). Such actions will terminate warranty coverage.

Additional Grounding

Attempts to improve module or system grounding by soldering braids, wires, or cables onto the module RF shield cover is done at the customer's own risk. The numerous ground pins at the module perimeter should be sufficient for optimum immunity to external RF interference.

SHIPMENT, HANDLING, AND STORAGE

Shipment

The modules are delivered in trays of 50.

Handling

The modules are designed and packaged to be processed in an automated assembly line.

Warning

The modules contain highly sensitive electronic circuitry. Handling without proper ESD protection may destroy or damage the module permanently.

Warning

The modules are moisture-sensitive devices. Appropriate handling instructions and precautions are summarized in J-STD-033. Read carefully to prevent permanent damage due to moisture intake.

Moisture Sensitivity Level (MSL)

MSL 3, per J-STD-033

Storage

Storage/shelf life in sealed bags is 12 months at <40°C and <90% relative humidity.

QUALITY

CEL modules offer the highest quality at competitive prices. Our modules are manufactured in compliance with the IPC-A-610 specification, Class II. Our modules go through JESD22 qualification processes which includes high temperature operating life tests, mechanical shock, temperature cycling, humidity and reflow testing. CEL modules are 100% factory tested for RF and DC performance. In addition, every production lot is sample tested for compliance with CEL's high quality and performance standards.

CEL builds quality into our products giving our customers the confidence when integrating our products into their systems.

NOT RECOMMENDED FOR NEW DESIGNS

AGENCY CERTIFICATIONS

FCC Compliance Statement (Part 15.19) Section 7.15 of RSS-GEN

This device complies with Part 15 of the FCC Rules. Operation is subject to the following two conditions:

1. This device may not cause harmful interference.
2. This device must accept any interference received, including interference that may cause undesired operation.

Warning (Part 15.21)

Changes or modifications not expressly approved by CEL could void the user's authority to operate the equipment.

20 cm Separation Distance

To comply with FCC/IC RF exposure limits for general population/uncontrolled exposure, the antenna(s) used for this transmitter must be installed to provide a separation distance of at least 20 cm from all persons and must not be co-located or operating in conjunction with any other antenna or transmitter.

OEM Responsibility to the FCC Rules and Regulations

The FreeStar Module has been certified per FCC Part 15 rules for integration into products without further testing or certification. To fulfill the FCC certification requirements, the OEM of the FreeStar Module must ensure that the information provided on the FreeStar Label is placed on the outside of the final product. The FreeStar Module is labeled with its own FCC ID Number. If the FCC ID is not visible when the module is installed inside another device, then the outside of the device into which the module is installed must also display a label referring to the enclosed module. This exterior label can use wording such as the following: “Contains Transmitter Module FCC ID: TFB-FREESTAR” or “Contains FCC ID: TFB-FREESTAR”

The OEM of the FreeStar Module must only use the approved antenna, that has been certified with this module. The OEM of the FreeStar Module must test their final product configuration to comply with Unintentional Radiator Limits before declaring FCC compliance per Part 15 of the FCC rules.

IC Certification — Industry Canada Statement

The term "IC" before the certification/registration number only signifies that the Industry Canada technical specifications were met.

This device complies with Industry Canada license-exempt RSS standard(s). Operation is subject to the following two conditions: (1) this device may not cause interference, and (2) this device must accept any interference, including interference that may cause undesired operation of the device.

Le présent appareil est conforme aux CNR d'Industrie Canada applicables aux appareils radio exempts de licence. L'exploitation est autorisée aux deux conditions suivantes : (1) l'appareil ne doit pas produire de brouillage, et (2) l'utilisateur de l'appareil doit accepter tout brouillage radioélectrique subi, même si le brouillage est susceptible d'en compromettre le fonctionnement

Section 14 of RSS-210

The installer of this radio equipment must ensure that the antenna is located or pointed such that it does not emit RF field in excess of Health Canada limits for the general population. Consult Safety Code 6, obtainable from Health Canada's website: http://www.hc-sc.gc.ca/ewh-semt/pubs/radiation/99ehd-dhm237/index-eng.php

EMC Certification

FCC Part 15.247 Module Certified (Portable)
EN 300 328 1 Certified / CE Approved

Moisture Sensitivity Level (MSL)

MSL 3, per J-STD-033

NOT RECOMMENDED FOR NEW DESIGNS

AGENCY CERTIFICATIONS *(Continued)*

CE Certification — Europe

The FreeStar module has been tested and certified for the European Union.

OEM Responsibility to the European Union Compliance Rules

If the FreeStar module is to be incorporated into a product, the OEM must verify compliance of the final product to the European Harmonized EMC and Low-Voltage/Safety Standards. A Declaration of Conformity must be issued for each of these standards and kept on file as described in Annex II of the R&TTE Directive.

The manufacturer must maintain the user's guide and adhere to the settings described in the manual for maintaining European Union Compliance. If any of the specifications are exceeded in the final product, the OEM is required to make a submission to the notified body for compliance testing.

OEM Labeling Requirements

The `CE' mark must be placed on the OEM product in a visible location.
The CE mark shall consist of the initials “CE” with the following form:

- If the CE marking is reduced or enlarged, the proportions given in the above graduated drawing must be adhered to.
- The CE mark must be a minimum of 5mm in height
- The CE marking must be affixed visibly, legibly and indelibly. Since the 868 MHz band is not harmonized by a few countries throughout Europe, the Restriction sign must be placed to the right of the “CE” marking as shown in the picture





Australia Certification

Number: AS/NZS 4268



NOT RECOMMENDED FOR NEW DESIGNS

REFERENCES & REVISION HISTORY

Previous Versions	Changes to Current Version	Page(s)
0001-00-07-01-000 (Issue ES) October 10, 2011	Initial preliminary datasheet.	N/A
0001-00-07-01-000 (Issue ES) October 26, 2011	Updated Electrical Characteristics, Software Revisions.	1, 4, 6

Disclaimer

- The information in this document is current as of the published date. The information is subject to change without notice. For actual design-in, refer to the latest publications of CEL data sheets or data books, etc., for the most up-to-date specifications of CEL products. Not all products and/or types are available in every country. Please check with an CEL sales representative for availability and additional information.
- No part of this document may be copied or reproduced in any form or by any means without the prior written consent of CEL. CEL assumes no responsibility for any errors that may appear in this document.
- CEL does not assume any liability for infringement of patents, copyrights or other intellectual property rights of third parties by or arising from the use of CEL products listed in this document or any other liability arising from the use of such products. No license, express, implied or otherwise, is granted under any patents, copyrights or other intellectual property rights of CEL or others.
- Descriptions of circuits, software and other related information in this document are provided for illustrative purposes in semiconductor product operation and application examples. The incorporation of these circuits, software and information in the design of a customer's equipment shall be done under the full responsibility of the customer. CEL assumes no responsibility for any losses incurred by customers or third parties arising from the use of these circuits, software and information.
- While CEL endeavors to enhance the quality, reliability and safety of CEL products, customers agree and acknowledge that the possibility of defects thereof cannot be eliminated entirely. To minimize risks of damage to property or injury (including death) to persons arising from defects in CEL products, customers must incorporate sufficient safety measures in their design, such as redundancy, fire-containment and anti-failure features.

NOT RECOMMENDED FOR NEW DESIGNS