ZPM3570
ZigBee Pro Module



Data Sheet

© 2011 by RF Monolithics, Inc.

Table of Contents

1 System Description 4
1.1 Applications 4
1.2 Module Summary 4
1.3 Block Diagram 4
1.4 Acronyms 5
2 Mechanical Specifications 5
2.1 Module Dimensions 5
2.2 Module Outline Drawing 5
2.3 Module Bottom View 6
2.4 Detailed Mechanical Data (Top View) 6
2.5 Module Pin Out 7
3 DC Electrical Specifications 8
3.1 Typical Power Consumption 8
3.2 Digital IO Specifications 8
4 RF Specifications 9
5 Environmental Specifications 9
5.1 Absolute Maximum Ratings 9
5.2 Recommended Operating Conditions 9
6 Application Information 10
6.1 Connection Reference for the UART Host Interface 10
6.2 Connection Reference for the SPI Host Interface 10
6.3 Recommended Host (Customer) Circuit Board PCB Land Pattern 11
6.4 Host PCB Layout Recommendations 12
6.5 Module Location 13
6.5.1 Location in x-y Plane 13
6.5.2 Location in z Plane 14
7 Assembly Information 14
7.1 Lead-free Reflow Soldering Profile 14
8 Package Information 15
8.1 Tape and Reel Specifications 15
9 Ordering Information 16
10 RoHS Declaration 16
11 Regulatory Information 16
11.1 FCC Notice (USA) 16
11.1.1 FCC Labeling Requirements 17
11.1.2 RF Exposure 17
11.2 IC Notice (CANADA) 17
11.3 CE Notice (EUROPE) 18
12 Technical Support Contact 18
13 References 18

© 2011 by RF Monolithics, Inc.

List of Figures

Figure 1 ZPM3750 Module Block Diagram 4
Figure 2 Module Top and Side View 5
Figure 3 Module Bottom View 6
Figure 4 Detailed Mechanical Data (Top View) 6
Figure 5 UART Host Interface Reference Diagram 10
Figure 6 SPI Host Interface Reference Diagram 10
Figure 7 Recommended Host (Customer) PCB Pattern 11
Figure 8 Recommended Host Circuit Board Design Underneath the Module 12
Figure 9 Recommended Locations in x-y Plane 13
Figure 10 Locations Not Recommended in x-y Plane 13
Figure 11 Recommended Locations in z Plane 14
Figure 12 Locations not Recommended IN x-y Plane 14
Figure 13 Recommended Solder Reflow Profile 15
Figure 14 Tape Dimensions 15

1 System Description

1.1 Applications

RFM's ZPM3750 module is a standards-based wireless transceiver designed for Smart Energy and other short range wireless markets that require low power consumption, high transmit power (20 dBm typical) and high receiver sensitivity (-103 dBm). The ZPM3750 is based upon the IEEE 802.15.4 wireless network specification and includes the ZigBee PRO stack. The module can be used to develop applications supporting the ZigBee PRO Smart Energy and Home Automation application profiles. The ZPM3750 module operates in the 2.4 GHz unlicensed ISM frequency band for worldwide deployment.

1.2 Module Summary

- Dimensions: 27.20 x 14.75 x 2.90 mm
- Ember EM357 high-performance, integrated ZigBee/802.15.4 chipset
- Supply voltage: 2.4 to 3.4 V
- Data logging memory: 8 Mbits serial flash
- Security: 128-bit AES
- Antenna: on-module
- Host Interface: SPI, UART
- Meter interface: I2C, GPIO
- ADC ports: 6 x 14-bit
- RoHS compliant
- MSL JEDEC level 3

1.3 Block Diagram

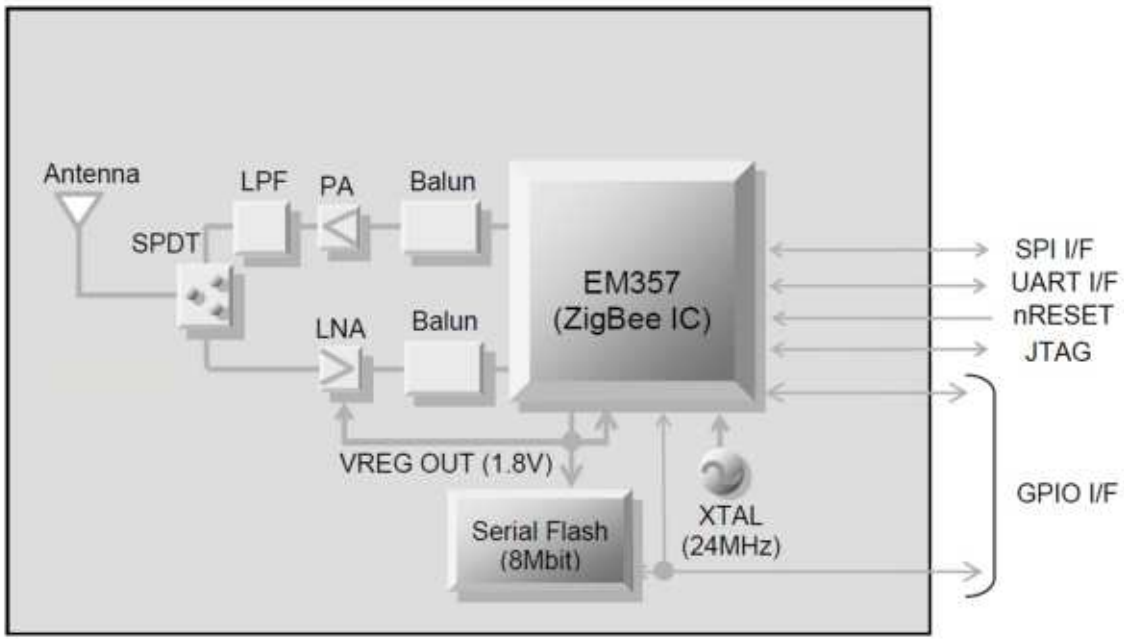

Figure 1 - ZPM3750 Module Block Diagram

1.4 Acronyms

ADC Analog to Digital Converter
AMR Automatic Meter Reading
GPIO General-Purpose Input-Output
I2C Intelligent Interface Controller
ISM Industrial, Scientific and Medical
MAC Medium Access Control
MSL Moisture Sensitivity Level
PER Packet Error Rate
ROHS Restriction of Hazardous Substances
SPI Serial Peripheral Interface
UART Universal Asynchronous Receiver-Transmitter
WPAN Wireless Personal Area Network

2 Mechanical Specifications

2.1 Module Dimensions

Parameter	Typical	Units
Dimensions (L x W x H)	27.20 x 14.75 x 2.90	mm
Dimensional Tolerances (L, W, H)	±0.20, ±0.20, ±0.15	mm

2.2 Module Top and Side View

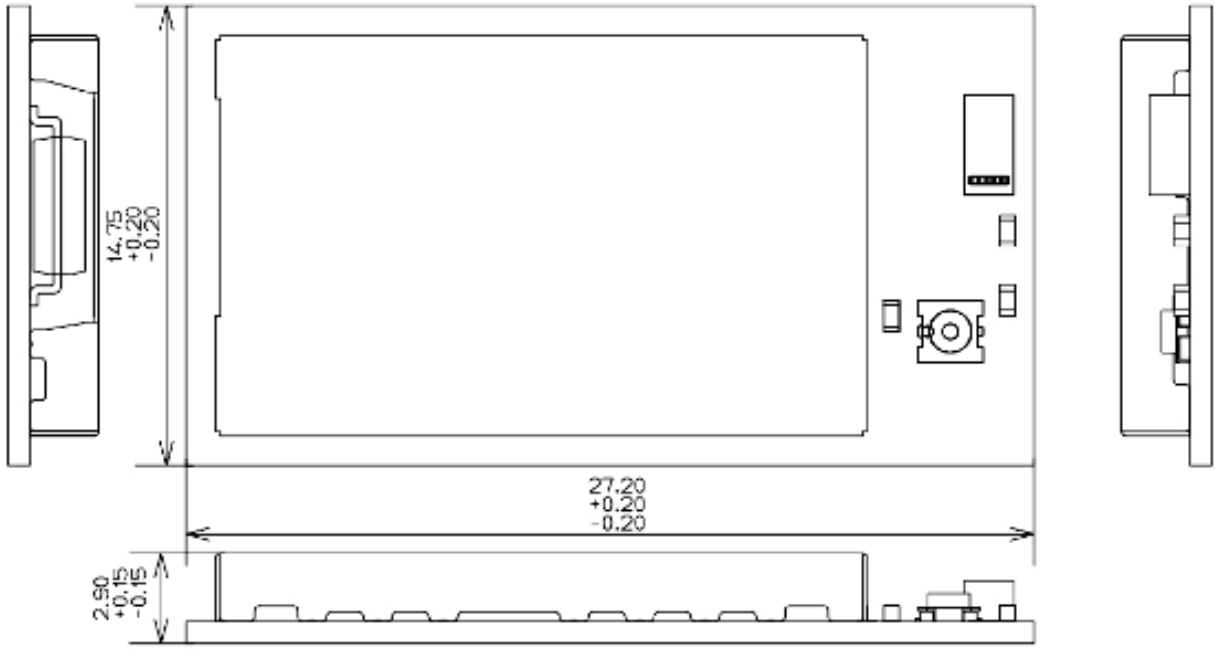

Figure 2 - ZMP3570 Outline Drawing

2.3 Module Bottom View

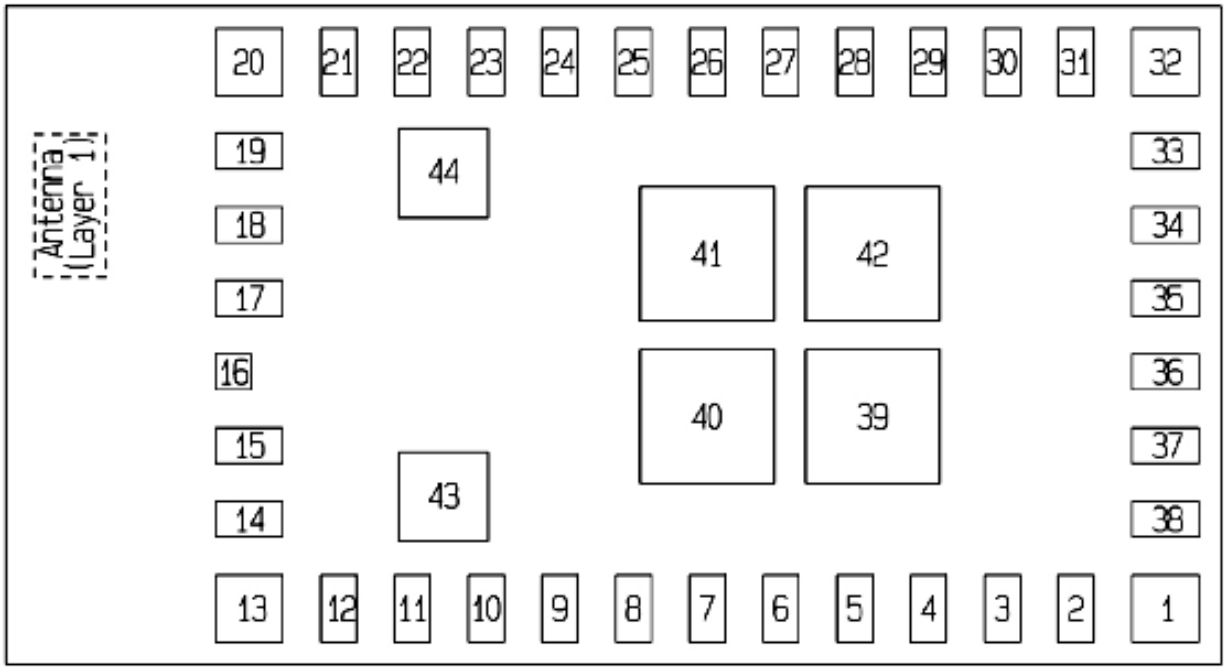

Figure 3 - ZMP3570 Bottom View

2.4 Detailed Mechanical Data (Top View)

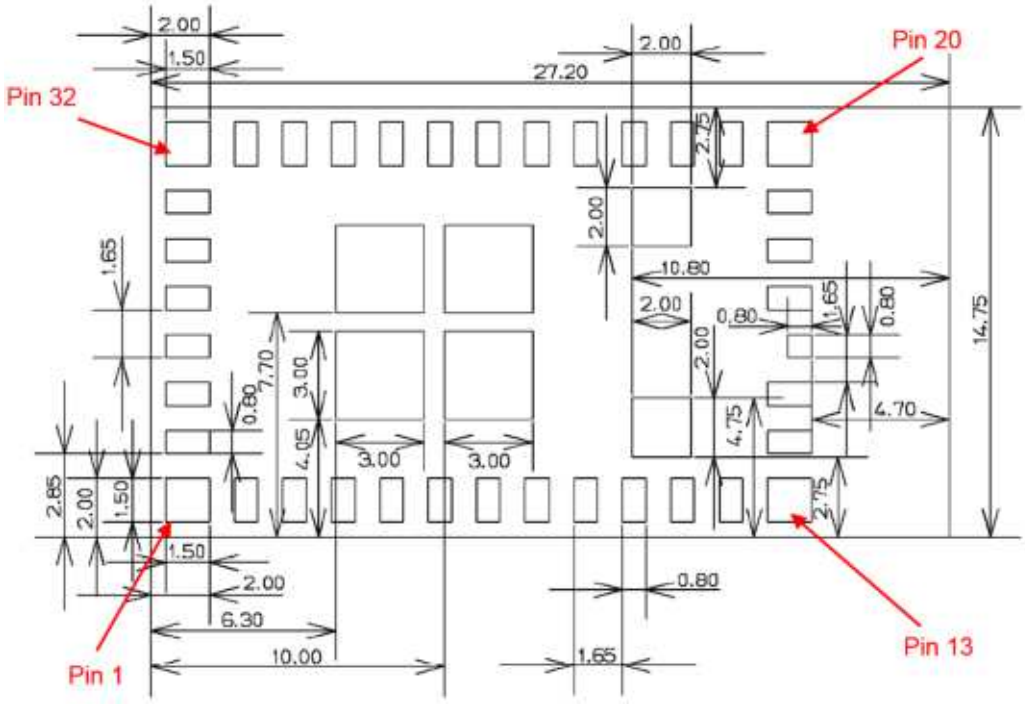

Figure 4 - Detailed Mechanical Data (top view)

2.5 Module Pin Out

Pin	Name	I/O	Description
1	GND	-	Ground
2	Reserved	O	Internal serial flash on/off control (active low),for debugging use only
3	PC4/JTMS	I/O	Programmable I/O control available to the host, or JTAG mode select
4	PB0/IRQA	I/O	Programmable I/O control available to the host, or an interrupt input
5	Reserved	O	Internal serial flash nCS, for debugging use only
6	PB6/ADC1/IRQB	I/O	Programmable I/O control available to the host, or ADC input, or an interrupt input
7	PC1/ADC3	I/O	Programmable I/O control available to the host, or an ADC input
8	SWCLK/JTCK	I	JTAG/Serial Wire debugging port clock
9	PC0/JRST/IRQD	I/O	Programmable I/O control available to the host, or an interrupt input, or the JTAG reset input
10	GND	-	Ground
11	PB5/ADC0	I/O	Programmable I/O control available to the host, or an ADC input
12	GND	-	Ground
13	GND	-	Ground
14	GND	-	Ground
15	GND	-	Ground
16	Reserved	I/O	Not connected in ZPM3750
17	GND	-	Ground
18	Reserved	O	Used internally as the LNA on (active low), for debugging use only
19	nRESET	I	Module reset signal (Internal pull-up)
20	GND	-	Ground
21	GND	-	Ground
22	PA3	I/O	Programmable I/O control available to the host
23	GND	-	Ground
24	PC6/OSC32B	I/O	Programmable I/O control available to the host, or 32.768 kHz crystal
25	PC7/OSC32A	I/O	Programmable I/O control available to the host, or 32.768 kHz crystal
26	SC1SCLK/PB3	I/O	SPI port 1 clock, or programmable I/O control available to the host
27	Reserved	O	Used internally as the serial flash MOSI, for debugging use only
28	Reserved	O	Used internally as the serial flash MISO, for debugging use only
29	VBATT	PI	Module power supply
30	Reserved	O	Used internally as the serial flash clock, for debugging use only
31	PA4/ADC4	I/O	Programmable I/O control available to the host, or ADC input
32	GND	-	Ground
33	PA5/ADC5/nBOOTMODE	I/O	Programmable I/O control available to the host, or ADC input, or Boot control, must be left open or pulled high during the reset to enable the normal firmware boot process.
34	SC1MISO(s) /SC1MOSI(m)/TXD/PB1/SC1SDA	I/O	SPI port 1 MISO (slave)/ MOSI (master) signal, UART TXD signal, I2C port 1 DATA signal, or programmable I/O control available to the host
35	SC1MOSI(s) /SC1MISO(m)/RXD/PB2/SC1SCL	I/O	SPI port 1 MOSI (slave)/ MISO (master) signal, UART RXD signal, I2C port 1 CLK signal, or programmable I/O control available to the host.
36	PC2/JTDO/SWO	I/O	Programmable I/O control available to the host, or Serial Wire port OUT-PUT signal, or JTAG data out
37	SC1nSSEL/PB4	I/O	SPI port 1 slave select, or programmable I/O control available to the host
38	PC3/JTDI	I/O	Programmable I/O control available to the host, or JTAG data in
39	GND	-	Ground
40	GND	-	Ground
41	GND	-	Ground

© 2011 by RF Monolithics, Inc.

Pin	Name	I/O	Description
42	GND	-	Ground
43	GND	-	Ground
44	GND	-	Ground

3 DC Electrical Specifications

3.1 Typical Power Consumption

Specification	Conditions	Min	Typical	Max	Units
Sleep Mode	V_{CC} = 3.0 V, T_{AMB} = 25 °C ,internal RC oscillator on, processor, radio, peripherals off		1.2		µA
Standby Mode	V_{CC} = 3.0 V, T_{AMB} = 25 °C, processor on, radio and peripherals off		12		mA
Receive Mode	V_{CC} = 3.0 V, T_{AMB} = 25 °C, radio receive chain on		35		mA
Transmit Mode, +20 dBm	V_{CC} = 3.0 V, T_{AMB} = 25 °C radio transmit chain on		175		mA
Serial Controller Current	Serial controller current for each controller at maximum data rate		0.2		mA
General Purpose Timer Current	For each timer at maximum clock rate		0.25		mA
General Purpose ADC Current	At maximum sample rate, DMA enabled		1.1		mA

3.2 Digital IO Specifications

V_{CC} = 3.0 V, T_{AMB} = 25 °C, NORMAL MODE[1] unless otherwise stated

Specification	Conditions	Symbol	Minimum	Maximum	Units
Input Current for Logic 0		I_{IL}		-0.5	µA
Input Current for Logic 1		I_{IH}		0.5	µA
Low Schmidt Switching Threshold	Input going from high to low	V_{SWIL}	0.42 * V_{CC}	0.5 * V_{CC}	V
High Schmidt Switching Threshold	Input going from low to high	V_{SWIH}	0.62 * V_{CC}	0.80 * V_{CC}	V
Output Voltage for Logic 0	I_{OL} = 4 mA for standard pads I_{OL} = 8 mA for high current pads	V_{OL}	0	0.18 * V_{CC}	V
Output Voltage for Logic 1	I_{OH} = 4 mA for standard pads I_{OH} = 8 mA for high current pads	V_{OH}	0.82 * V_{CC}	V_{CC}	V
Output Source Current	Standard pad	I_{OHS}		4	mA
Output Sink Current	Standard pad	I_{OLS}		4	mA
Output Source Current	High current pad	I_{OOH}		8	mA
Output Sink Current	High current pad	I_{OLH}		8	mA
Total Output Current		I_{OH} + I_{OL}		40	mA

1. NORMAL MODE as defined by Ember for EM357

4 RF Specifications

V_{CC} = 3.0 V, T_{AMB} = 25 °C, NORMAL MODE measured at 50 Ω terminal load connected to the RF connector

Specification	Minimum	Typical	Maximum	Units
Frequency Range	2400		2500	MHz
Receiver Sensitivity		-103		dBm
Maximum Input Signal Level	-20			dBm
Transmitter Power at Maximum Setting		20		dBm
Adjacent Channel Rejection		24		dB
Alternate Channel Rejection		42		dB
Carrier Frequency Error	-40		+40	ppm

5 Environmental Specifications

5.1 Absolute Maximum Ratings

Specification	Symbol	Minimum	Maximum	Units
Operating Temperature	T_{OP}	-40	85	°C
Storage Temperature	T_{ST}	-40	85	°C
Power Supply Voltage	V_{BATT}	-0.3	3.6	V
RF Input Power	RF_{IN}		10	dBm
Moisture Sensitivity Level	3			
RoHS Restriction of Hazardous Substances	Compliant			

5.2 Recommended Operating Conditions

Specification	Symbol	Minimum	Typical	Maximum	Units
Power Supply Voltage	V_{BATT}	2.4	3.0	3.4[1]	V
Operating Temperature	T_{OP}	-40		85	°C

1. This value is handled by Firmware to meet FCC regulation for modular approval.

6 Application Information

6.1 Connection Reference for the UART Host Interface

Figure 5 illustrates the connections between ZPM3750 module and the host MCU via UART interface. A level shifter may be needed if the host UART interface level does not match the 3.3V ZPM3750 interface.

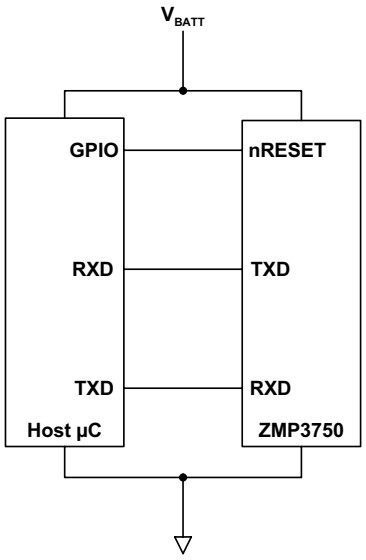

Figure 5 - UART Host Interface Reference Diagram

6.2 Connection Reference for the SPI Host Interface

Figure 6 illustrates the connections between ZPM3750 module and the host MCU via SPI interface.

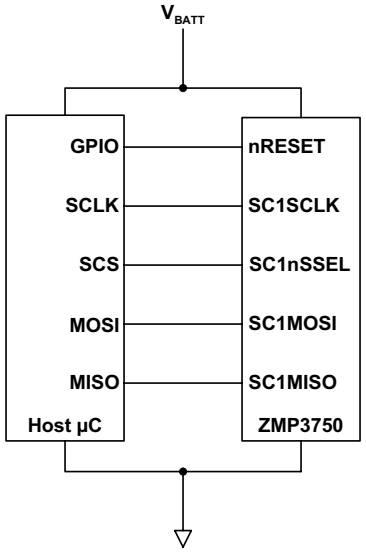

Figure 6 - SPI Host Interface Reference Diagram

6.3 Recommended Host (customer) Circuit Board PCB Land Pattern

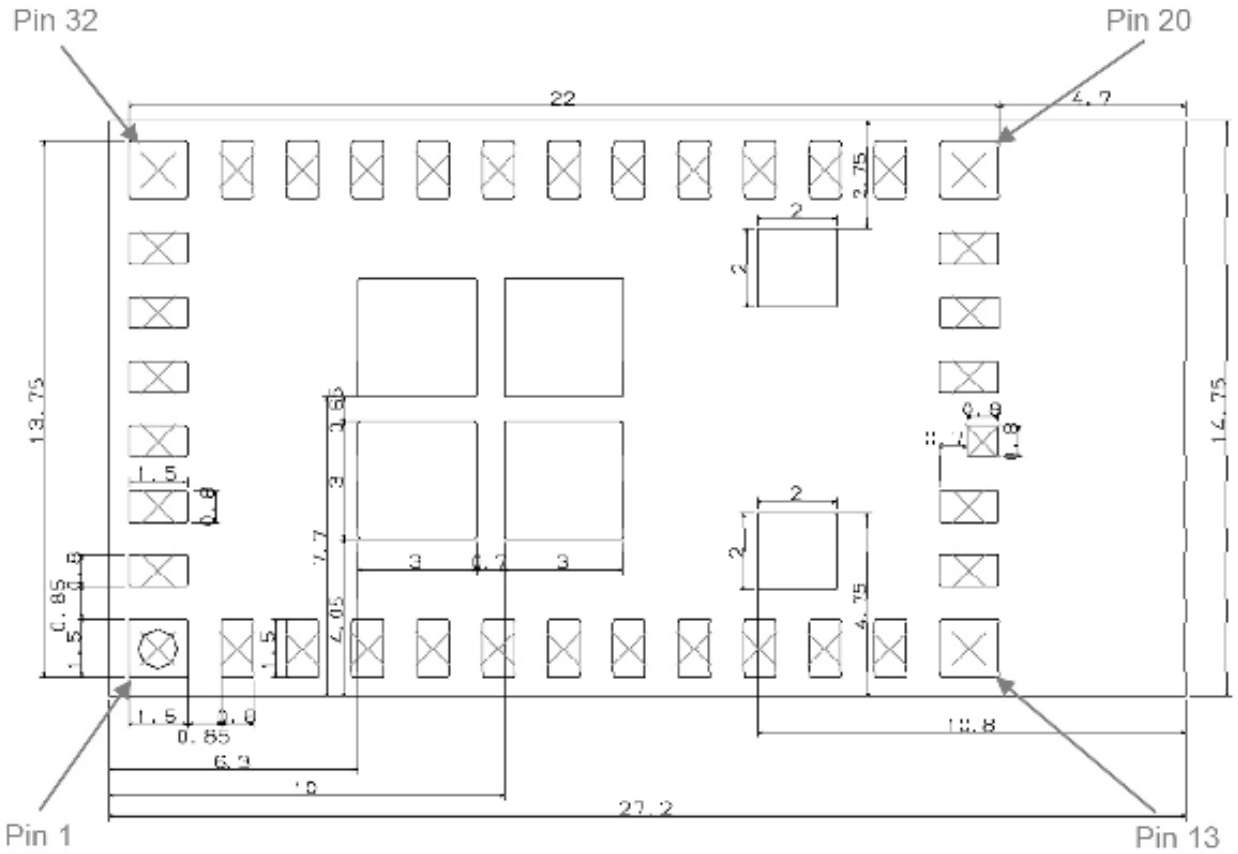

Figure 7 - Recommended Host (customer) PCB Pattern

6.4 Host PCB Layout Recommendations

The ZPM3750 module has an onboard antenna and requires some host PCB layout considerations underneath the module to provide the best RF performance. Refer to Figure 8 for the requirements.

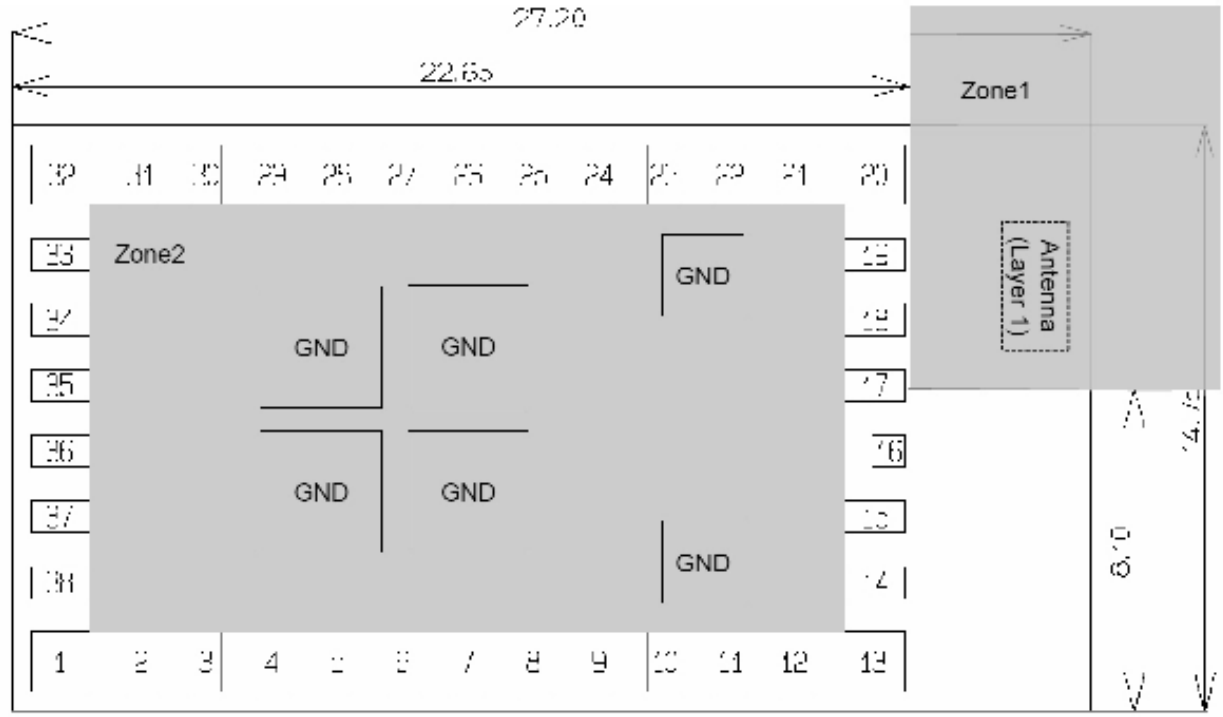

Notes:

1. Due to the surface mount antenna on the module, the area in 'Zone1' on all layers of the customer circuit board should be free of any metal objects. Specifically, there should be no ground plane, traces, or metal shield case.
2. The area in 'Zone2' on the top layer of the customer circuit board should have ground only with no signal traces.

Figure 8 - Recommended Host Circuit Board Design underneath the Module.

© 2011 by RF Monolithics, Inc.

6.5 Module Location

For optimum EIRP, customer is advised to use the recommended module location on their respective PCB.

6.5.1 Location in x-y Plane

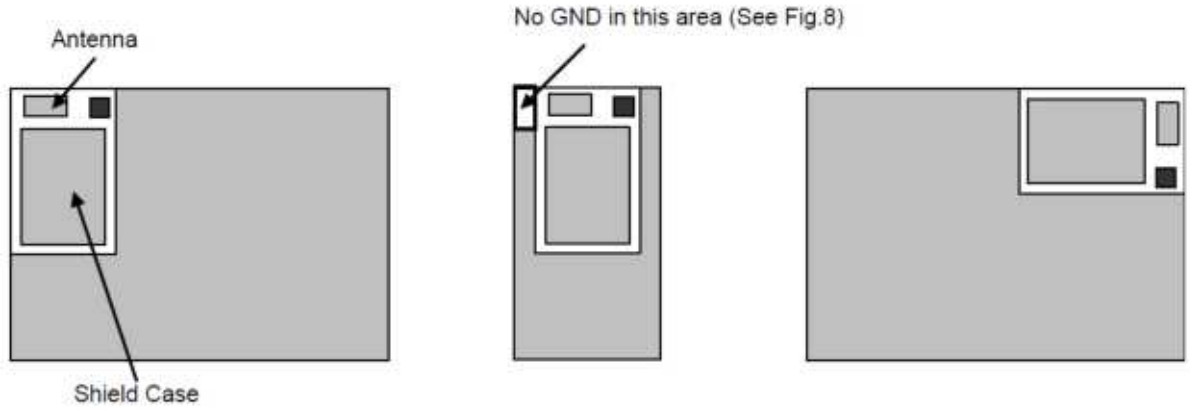

Figure 9 - Recommended Locations in x-y Plane

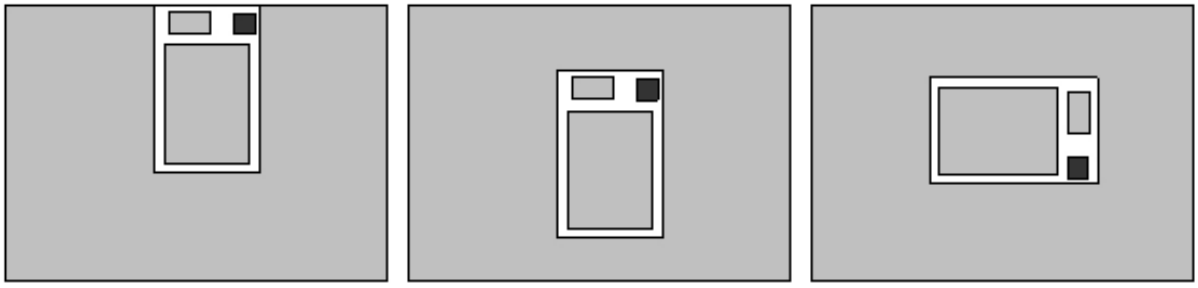

Figure 10 - Locations Not Recommended in x-y Plane

6.5.2 Location in z Plane

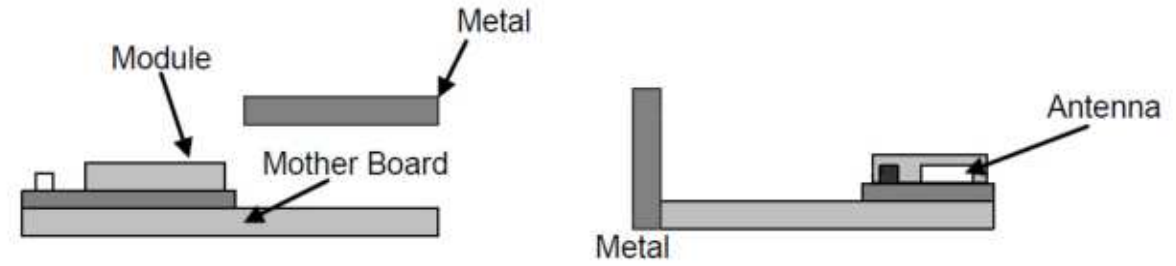

Figure 11 - Recommended Locations in z Plane

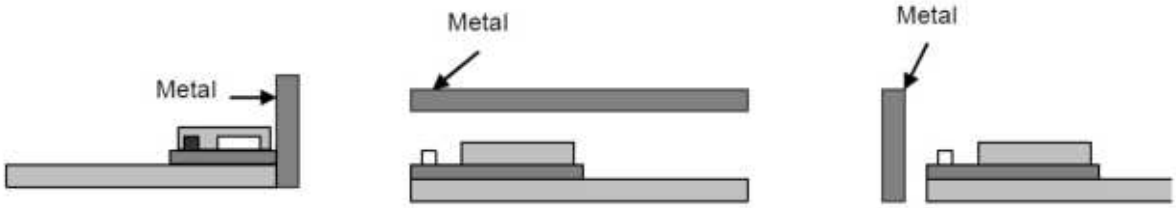

Figure 12 - Locations Not Recommended in z Plane

7 Assembly Information

7.1 Lead-free Soldering Reflow Profile

The lead-free solder reflow profile is recommended in the table and graph below. The profile is used to attach the module to its host PCB. The module is designed to withstand 2 reflows. Opposite side reflow is prohibited due to the module weight.

Specification	Recommendation
Ramp-up Rate	3 °C per second maximum
Maximum Time Above 217 °C	120 seconds
Peak Temperature	250 °C
Maximum Time within 5 °C of Peak Temperature	20 seconds
Ramp-down Rate	6 °C per second maximum

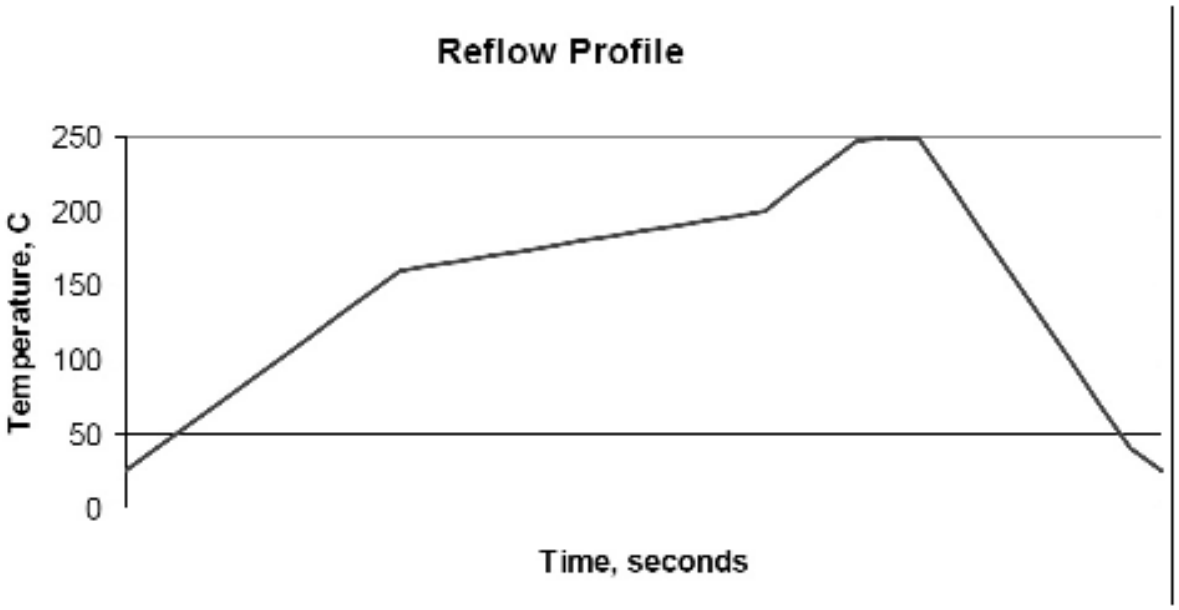

Figure 13 - Reflow Profile Pattern

8 Package Information

8.1 Tape and Reel Specifications

This product is shipped in tape and reel packaging.

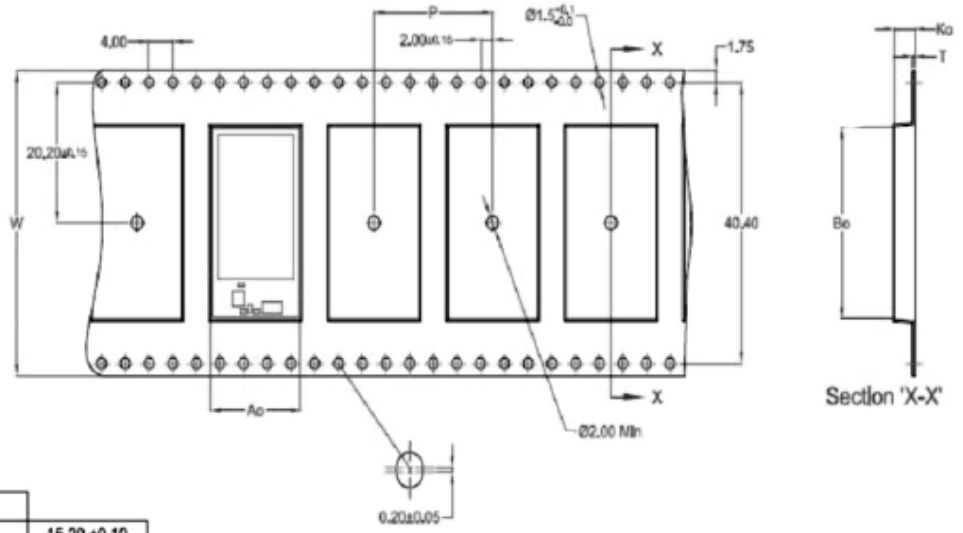

DIMENSIONS	
Ao	15.20 ±0.10
Bo	27.70 ±0.10
Ko	3.40 ±0.10
W	44.00 ±0.30
P	20.00 ±0.10
T	0.30 ±0.05

NOTES:
ALL DIMENSIONS IN MILLIMETRES
10 SPROCKET HOLE PITCH CUMULATIVE TOLERANCE ± 0.20
MATERIAL: CONDUCTIVE POLYSTYRENE
CAMBER NOT TO EXCEED 1.0mm IN 250mm

Figure 14 - Tape Dimensions

9 Ordering Information

Module: ZPM3570
Development Kit: ZPM3570DK

10 RoHS Declaration

Given supplier declarations, this product does not contain substances that are banned by Directive 2002/95/EC or contains a maximum concentration of 0.1% by weight in homogeneous materials for

- Lead and lead compounds
- Mercury and mercury compounds
- Chromium (VI)
- PBB (polybrominated biphenyl)
- PBDE (polybrominated biphenyl ether)

And a maximum concentration of 0.01% by weight in homogeneous materials for

- Cadmium and cadmium compounds

11 Regulatory Information

ZPM3750 has obtained the certifications described below.

11.1 FCC Notice (USA)

This device complies with Part 15 of the FCC rules. Operation is subject to the following two conditions: (1) this device may not cause harmful interference, and (2) this device must accept any interference received, including interference that may cause undesired operation.

The FCC requires the user to be notified that any changes or modifications not expressly approved by RFM, Inc. may void the user's authority to operate the equipment. While an application of the ZPM3570 module in a product is not required to obtain a new FCC authorization for the module, this does not preclude the possibility that some other form of authorization or testing may be required for that end product.

This device using the integrated antenna has been tested to comply with FCC CFR Part 15. The device meets the requirements for modular transmitter approval as detailed in the FCC public notice DA00.1407.transmitter, given the following considerations:

- Maximum output power for the channels as defined by IEEE 802.15.4 [1] must be set to the value below using emberSetRadioPower or equivalent under NORMAL mode as specified in [2].
  - For channels 11 to 24, the value of -11
  - For channel 25, the value of -17
  - For channel 26, the value of -27
- Duty cycle of 67% allowed.
- The firmware disables power out if the source voltage is greater than 3.4 V.
- VBATT must be between 2.4 and 3.4 V.

This equipment has been tested and found to comply with the limits for a Class B digital device, pursuant to Part 15 of the FCC Rules. These limits are designed to provide reasonable protection against harmful interference in a residential installation. This equipment generates, uses and can radiate radio frequency energy and, if not installed and used in accordance with the instructions, may cause harmful interference to radio communications. However, there is no guarantee that interference will not occur in a particular

installation. If this equipment does cause harmful interference to radio or television reception, which can be determined by turning the equipment off and on, the user is encouraged to try to correct the interference by one or more of the following measures: reorient or relocate the receiving antenna, increase the separation between the equipment and receiver, connect the equipment into an outlet on a circuit different from that to which the receiver is connected, or consult the dealer or an experienced radio/TV technician for help.

11.1.1 FCC Labeling Requirements

When integrating the ZPM3750 into a product the FCC labeling requirements must be met. This includes a clearly visible label on the outside of the finished product specifying the ZPM3750 FCC identifier (FCC ID: QPU3020) as well as the notice above. The exterior label can use wording such as “Contains Transmitter Module FCC ID: QPU3020” or “Contains FCC ID: QPU3020” although any similar wording that expresses the same meaning may be used.

11.1.2 RF Exposure

This module has been certified for remote and base radio applications and is not intended to be operated within 20 cm of the body. If the module will be used for portable applications, the device must undergo SAR testing.

The following statement must be included as a CAUTION statement in manuals for the products to alert users on FCC RF exposure compliance:

“WARNING: To satisfy FCC RF exposure requirements for mobile transmitting devices, a separation distance of 20 cm or more should be maintained between the antenna of this device and persons during operation. To ensure compliance, operations at closer distances than this are not recommended.”

11.2 IC Notice (Canada)

The term “IC” before the certification/registration number only signifies that the Industry Canada technical specifications were met.

Le terme “IC” devant le numéro de certification /d’enregistrement signifie seulement que les spécifications techniques Industrie Canada ont été respectées.

This device complies with Industry Canada license-exempt RSS standard(s). Operation is subject to The following two conditions: (1) this device may not cause interference, and (2) this device must accept any interference, including interference that may cause undesired operation of the device.

Cet appareil est conforme avec Industrie Canada RSS standard exempts de licence (s). Son utilisation est soumise à Les deux conditions suivantes: (1) cet appareil ne peut pas provoquer d'interférences et (2) cet appareil doit accepter Toute interférence, y compris les interférences qui
peuvent causer un mauvais fonctionnement du dispositif.

This device complies with Health Canada’s Safety Code 6 / IC RSS-210. The installer of this device should ensure that RF radiation is not emitted in excess of the Health Canada’s requirement. Information can be obtained at: http://www.hc-sc.gc.ca/ewh-semt/pubs/radiation/radio_guidelignes_direct-eng.php

Cet appareil est conforme avec Santé Canada Code de sécurité 6 / IC RSS-210. Le programme d'installation de cet appareil doit s'assurer que les rayonnements RF n'est pas émis au-delà de l'exigence de Santé Canada. Les informations peuvent être obtenues: http://www.hc-sc.gc.ca/ewhsemt/pubs/radiation/radio_guide-lignes_direct-eng.php

The host device should be properly labeled to identify the module within the host device. The Industry Canada certification label of a module shall be clearly visible at all times when installed in the host device, otherwise the host device must be labeled to display the Industry Canada certification number of the module, preceded by the words “Contains transmitter module”, or the word “Contains”, or similar wording expressing the same meaning, as follows: Contains transmitter module IC:4523A-ZPM3750 where 4523A-ZPM3750 is the module’s certification number.

11.3 CE Notice (Europe)

This device has been tested and certified for use in the European Union. If this device is used in a product, the OEM has responsibility to verify compliance of the final product to the EU standards. A Declaration of Conformity must be issued and kept on file as described in Annex II of the Radio and Telecommunications Terminal Equipment Directive.

The ‘CE’ mark must be placed on the OEM product per the labeling requirements of the Directive. Given that the operating frequency band is not harmonized by a few European countries, the restriction or alert sign must be placed along side the ‘CE’ mark as shown below. As of the date of this document, only France has a restriction. The restriction is that, if the radio is operated outdoors in the 2450-2483.5 MHz band, the power must be limited to 10 mW instead of 100 mW. The OEM must account for this and the product must have the alert mark. It does not require country notifications, however.

12 Technical Support Contact

For technical support call RFM at +1 678 684-2000 between the hours of 8:30 AM and 5:30 PM US Eastern Time, or E-mail tech_support@rfm.com.

13 References

[1] IEEE Standard 802.15.4 - 2003 Wireless Medium Access Control (MAC) and Physical Layer (PHY) Specifications for Low-Rate Wireless Personal Area Networks (LR-WPANs)

[2] Ember, “EmberZNet API Reference: For the EM35x SoC Platform”, 120-3022-000G, October 28 2010

Note: Specifications subject to change without notice.

Part # M-3570-0000, Rev A