ADS1282 High-Resolution Analog-To-Digital Converter

1 Features

- High Resolution:
  130-dB SNR (250 SPS)
- High Accuracy:
  THD: –122 dB
  INL: 0.5 ppm
- Low-Noise PGA
- Two-Channel Input Mux
- Inherently-Stable Modulator with Fast Responding Overrange Detection
- Flexible Digital Filter:
  Sinc + FIR + IIR (Selectable)
  Linear or Minimum Phase Response
  Programmable High-Pass Filter
  Selectable FIR Data Rates: 250 SPS to 4 kSPS
- Filter Bypass Option
- Low Power Consumption: 25 mW
  Shutdown: 10 µW
- Offset and Gain Calibration Engine
- SYNC Input
- Analog Supply:
  Unipolar (+5 V) or Bipolar (±2.5 V)
- Digital Supply: 1.8 V to 3.3 V

2 Applications

- Energy Exploration
- Seismic Monitoring
- High-Accuracy Instrumentation

3 Description

The ADS1282 is an extremely high-performance, single-chip analog-to-digital converter (ADC) with an integrated, low-noise programmable gain amplifier (PGA) and two-channel input multiplexer (mux). The ADS1282 is suitable for the demanding needs of energy exploration and seismic monitoring environments.

The converter uses a fourth-order, inherently stable, delta-sigma (ΔΣ) modulator that provides outstanding noise and linearity performance. The modulator is used either in conjunction with the on-chip digital filter, or can be bypassed for use with post processing filters.

The flexible input MUX provides an additional external input for measurement, as well as internal self-test connections. The PGA features outstanding low noise (5 nV/√Hz) and high input impedance, allowing easy interfacing to geophones and hydrophones over a wide range of gains.

The digital filter provides selectable data rates from 250 to 4000 samples per second (SPS). The high-pass filter (HPF) features an adjustable corner frequency. On-chip gain and offset scaling registers support system calibration.

The synchronization input (SYNC) can be used to synchronize the conversions of multiple ADS1282s. The SYNC input also accepts a clock input for continuous alignment of conversions from an external source.

Together, the amplifier, modulator, and filter dissipate 25 mW. The ADS1282 is available in a compact TSSOP-28 package and is fully specified from –40°C to +85°C, with a maximum operating range to +125°C.

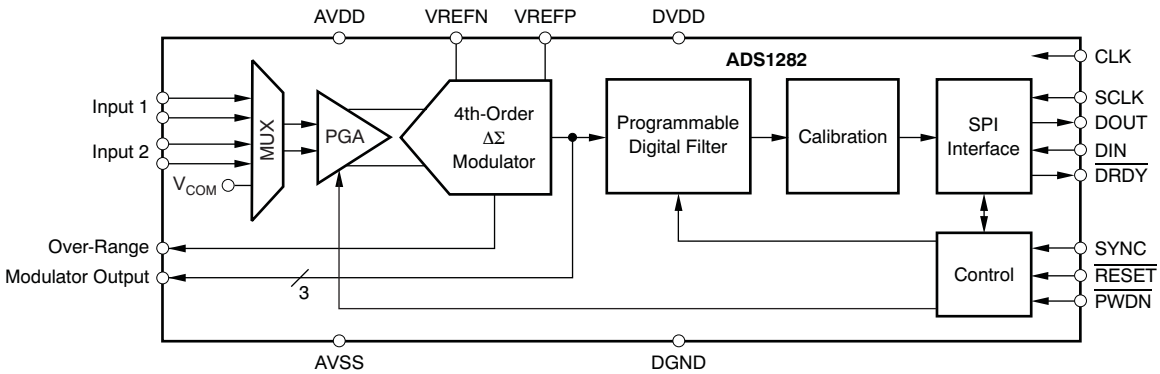

An IMPORTANT NOTICE at the end of this data sheet addresses availability, warranty, changes, use in safety-critical applications, intellectual property matters and other important disclaimers. PRODUCTION DATA.

This integrated circuit can be damaged by ESD. Texas Instruments recommends that all integrated circuits be handled with appropriate precautions. Failure to observe proper handling and installation procedures can cause damage.

ESD damage can range from subtle performance degradation to complete device failure. Precision integrated circuits may be more susceptible to damage because very small parametric changes could cause the device not to meet its published specifications.

4 Ordering Information

For the most current package and ordering information, see the Package Option Addendum at the end of this document, or visit the device product folder at ti.com.

5 Specifications

5.1 Absolute Maximum Ratings(1)

Over operating free-air temperature range (unless otherwise noted).

	ADS1282, ADS1282H	UNIT
AVDD to AVSS	–0.3 to +5.5	V
AVSS to DGND	–2.8 to +0.3	V
DVDD to DGND	–0.3 to +3.9	V
Input current	100, momentary	mA
Input current	10, continuous	mA
Analog input voltage	AVSS – 0.3 to AVDD + 0.3	V
Digital input voltage to DGND	–0.3 to DVDD + 0.3	V
Maximum junction temperature	+150	°C
Operating temperature range	–40 to +125	°C
Storage temperature range	–60 to +150	°C

(1) Stresses above these ratings may cause permanent damage. Exposure to absolute maximum conditions for extended periods may degrade device reliability. These are stress ratings only, and functional operation of the device at these or any other conditions beyond those specified is not implied.

Copyright © 2007–2015, Texas Instruments Incorporated

5.2 Electrical Characteristics

Limit specifications at –40°C to +85°C. Typical specifications at +25°C, AVDD = +2.5V, AVSS = –2.5V, f_{CLK} (1) = 4.096MHz, VREFP = +2.5V, VREFN = –2.5V, DVDD = +3.3V, CAPN – CAPP = 10nF, PGA = 1, and f_{DATA} = 1000SPS, unless otherwise noted.

PARAMETER		TEST CONDITIONS	MIN	TYP	MAX	UNIT
ANALOG INPUTS						
Full-scale input voltage		V_{IN} = (AINP – AINN)		$\pm V_{REF}/(2 \times PGA)$		V
Absolute input range	AINP or AINN		AVSS + 0.7		AVDD – 1.25	V
PGA input voltage noise density				5		nV/√Hz
Differential input impedance		Chop on		1		GΩ
		Chop off		100		GΩ
Common-mode input impedance				100		MΩ
Input bias current				1		nA
Crosstalk		f = 31.25Hz		–135		dB
MUX on-resistance				30		Ω
PGA OUTPUT (CAPP, CAPN)						
Absolute output range			AVSS + 0.4		AVDD – 0.4	V
PGA differential output impedance				600		Ω
Output impedance tolerance				±10%		
External bypass capacitance				10	100	nF
Modulator differential input impedance				55		kΩ
AC PERFORMANCE						
Signal-to-noise ratio (2)	SNR		120	124		dB
Total harmonic distortion (3)	THD	PGA = 1...16		–122	–114	dB
		PGA = 32		–117	–110	
		PGA = 64		–115		
Spurious-free dynamic range	SFDR			123		dB
DC PERFORMANCE						
Resolution		No missing codes	31			Bits
Data rate	f_{DATA}	FIR filter mode	250		4000	SPS
		Sinc filter mode	8000		128,000	SPS
Integral nonlinearity (INL) (4)		Differential input		0.00005	0.0004	% FSR (5)
Offset error		Shorted input		50	200	µV
Offset error after calibration (6)				1		µV
Offset drift				0.02		µV/°C
Gain error (7)			–1.5%	–1.0%	–0.5%	
Gain error after calibration (6)				0.0002%		
Gain drift		PGA = 1		2		ppm/°C
		PGA = 16		9		ppm/°C
Gain matching (8)				0.3%	0.8%	
Common-mode rejection		f_{CM} = 60Hz (9)	95	110		dB
Power-supply rejection	AVDD, AVSS	f_{PS} = 60Hz (9)	80	90		dB
	DVDD		90	115		

(1) f_{CLK} = system clock.
(2) V_{IN} = 20mV_{DC}/PGA; see Table 1.
(3) V_{IN} = 31.25Hz, –0.5dBFS.
(4) Best-fit method.
(5) FSR: Full-scale range = $\pm V_{REF}/(2 \times PGA)$.
(6) Calibration accuracy is on the level of noise reduced by 4 (calibration averages 16 readings).
(7) The PGA output impedance and the modulator input impedance results in –1% systematic gain error.
(8) Gain match relative to PGA = 1.
(9) f_{CM} is the input common-mode frequency. f_{PS} is the power-supply frequency.

Copyright © 2007–2015, Texas Instruments Incorporated

Electrical Characteristics (continued)

Limit specifications at –40°C to +85°C. Typical specifications at +25°C, AVDD = +2.5V, AVSS = –2.5V, f_{CLK} (1) = 4.096MHz, VREFP = +2.5V, VREFN = –2.5V, DVDD = +3.3V, CAPN – CAPP = 10nF, PGA = 1, and f_{DATA} = 1000SPS, unless otherwise noted.

PARAMETER		TEST CONDITIONS	MIN	TYP	MAX	UNIT
VOLTAGE REFERENCE INPUTS						
Reference input voltage		(V_{REF} = VREFP – VREFN)	0.5	5	(AVDD – AVSS) + 0.2	V
Negative reference input	VREFN		AVSS – 0.1		VREFP – 0.5	V
Positive reference input	VREFP		VREFN + 0.5		AVDD + 0.1	V
Reference input impedance				85		kΩ
DIGITAL FILTER RESPONSE						
Passband ripple					±0.003	dB
Passband (–0.01dB)				0.375 × f_{DATA}		Hz
Bandwidth (–3dB)				0.413 × f_{DATA}		Hz
High-pass filter corner			0.1		10	Hz
Stop band attenuation (10)			135			dB
Stop band				0.500 × f_{DATA}		Hz
Group delay		Minimum phase filter (11)		5/f_{DATA}		s
		Linear phase filter		31/f_{DATA}		
Settling time (latency)		Minimum phase filter		62/f_{DATA}		s
		Linear phase filter		62/f_{DATA}		
DIGITAL INPUT/OUTPUT						
V_{IH}			0.8 × DVDD		DVDD	V
V_{IL}			DGND		0.2 × DVDD	V
V_{OH}		I_{OH} = 1mA	0.8 × DVDD			V
V_{OL}		I_{OL} = 1mA			0.2 × DVDD	V
Input leakage		0 < $V_{DIGITAL\ IN}$ < DVDD			±10	µA
Clock input	f_{CLK}		1		4.096	MHz
Serial clock rate	f_{SCLK}				f_{CLK}/2	MHz
POWER SUPPLY						
AVSS			–2.6		0	V
AVDD			AVSS + 4.75		AVSS + 5.25	V
DVDD			1.65		3.6	V
AVDD, AVSS current		Normal operation		4.5	6.5	|mA|
		Standby mode		1	15	|µA|
		Power-down mode		1	15	|µA|
DVDD current		Normal operation		0.6	0.8	mA
		Modulator mode		0.1		mA
		Standby mode		25	50	µA
		Power-down mode (12)		1	15	µA
Power dissipation		Normal operation		25	35	mW
		Standby mode		90	250	µW
		Power-down mode		10	125	µW

(10) Input frequencies in the range of $Nf_{CLK}/512 \pm f_{DATA}/2$ (N = 1, 2, 3...) can mix with the modulator chopping clock. In these frequency ranges intermodulation = 120dB, typ.
(11) At dc; see Figure 44.
(12) CLK input stopped.

Copyright © 2007–2015, Texas Instruments Incorporated

6 Timing Diagram

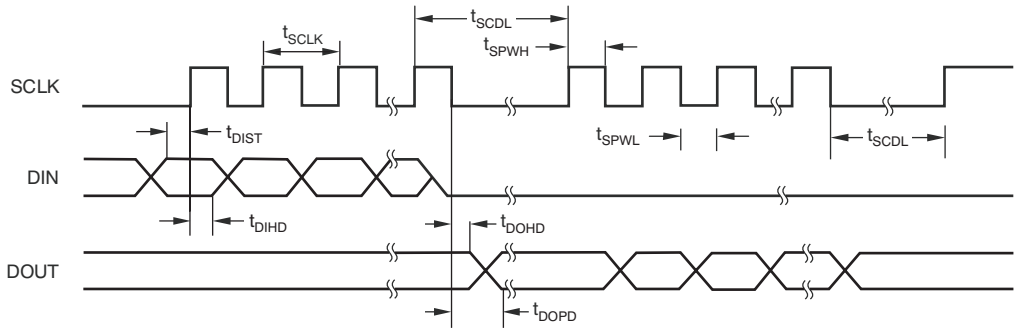

6.1 Timing Requirements

At T_A = –40°C to +85°C and DVDD = 1.65V to 3.6V, unless otherwise noted.

PARAMETER	DESCRIPTION	MIN	MAX	UNITS
t_{SCLK}	SCLK period	2	16	$1/f_{CLK}$
$t_{SPWH, L}$	SCLK pulse width, high and low(1)	0.8	10	$1/f_{CLK}$
t_{DIST}	DIN valid to SCLK rising edge: setup time	50		ns
t_{DIHD}	Valid DIN to SCLK rising edge: hold time	50		ns
t_{DOPD}	SCLK falling edge to valid new DOUT: propagation delay(2)		100	ns
t_{DOHD}	SCLK falling edge to DOUT invalid: hold time	0		ns
t_{SCDL}	Final SCLK rising edge of command to first SCLK rising edge for register read/write data. (Also between consecutive commands.)	24		$1/f_{CLK}$

(1) Holding SCLK low for 64 $\overline{DRDY}$ falling edges resets the serial interface.
(2) Load on DOUT = 20pF || 100kΩ.

Copyright © 2007–2015, Texas Instruments Incorporated

7 Pin Configuration and Functions

PW Package
TSSOP-28
(Top View)

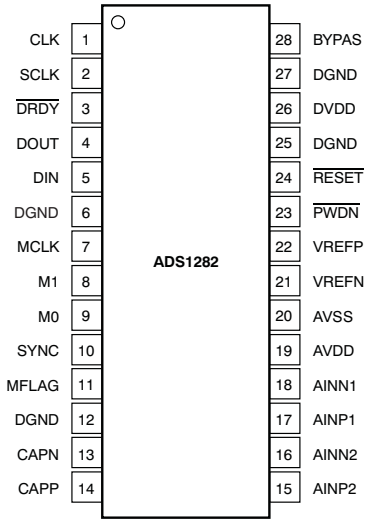

Pin Functions

NAME	NO.	FUNCTION	DESCRIPTION
CLK	1	Digital input	Master clock input
SCLK	2	Digital input	Serial clock input
$\overline{\text{DRDY}}$	3	Digital output	Data ready output: read data on falling edge
DOUT	4	Digital output	Serial data output
DIN	5	Digital input	Serial data input
MCLK	7	Digital I/O	Modulator clock output; if in modulator mode: MCLK: Modulator clock output Otherwise, the pin is an unused input (must be tied).
M1	8	Digital I/O	Modulator data output 1; if in modulator mode: M1: Modulator data output 1 Otherwise, the pin is an unused input (must be tied).
M0	9	Digital I/O	Modulator data output 0; if in modulator mode: M0: Modulator data output 0 Otherwise, the pin is an unused input (must be tied).
SYNC	10	Digital input	Synchronize input
MFLAG	11	Digital output	Modulator Over-Range flag: 0 = normal, 1 = modulator over-range
DGND	6, 12, 25, 27	Digital ground	Digital ground, pin 12 is the key ground point
CAPN	13	Analog	PGA outputs: Connect 10nF capacitor from CAPP to CAPN
CAPP	14	Analog	PGA outputs: Connect 10nF capacitor from CAPP to CAPN
AINP2	15	Analog input	Positive analog input 2
AINN2	16	Analog input	Negative analog input 2
AINP1	17	Analog input	Positive analog input 1
AINN1	18	Analog input	Negative analog input 1
AVDD	19	Analog supply	Positive analog power supply
AVSS	20	Analog supply	Negative analog power supply
VREFN	21	Analog input	Negative reference input
VREFP	22	Analog input	Positive reference input
$\overline{\text{PWDN}}$	23	Digital input	Power-down input, active low
$\overline{\text{RESET}}$	24	Digital input	Reset input, active low
DVDD	26	Digital supply	Digital power supply: +1.8V to +3.3V
BYPAS	28	Analog	Sub-regulator output: Connect 1µF capacitor to DGND

Copyright © 2007–2015, Texas Instruments Incorporated

8 Typical Characteristics

At +25°C, AVDD = +2.5V, AVSS = –2.5V, f_{CLK} = 4.096MHz, VREFP = +2.5V, VREFN = –2.5V, DVDD = +3.3V, PGA = 1, CAPN – CAPP = 10nF, and f_{DATA} = 1000SPS, unless otherwise noted.

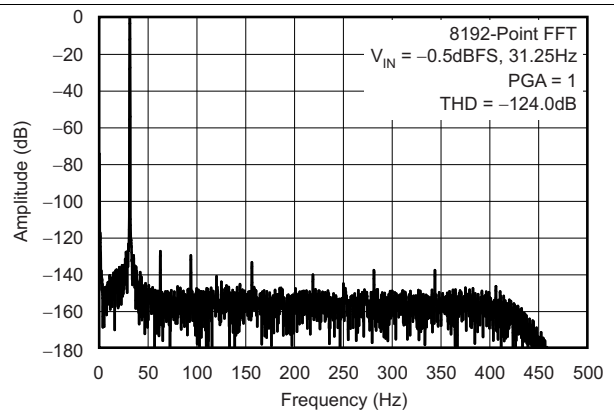

Figure 1. Output Spectrum

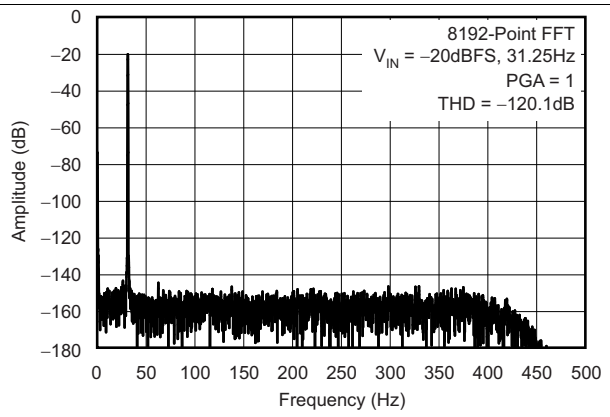

Figure 2. Output Spectrum

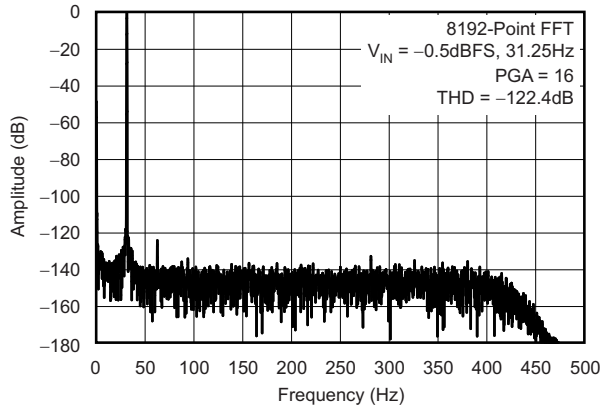

Figure 3. Output Spectrum

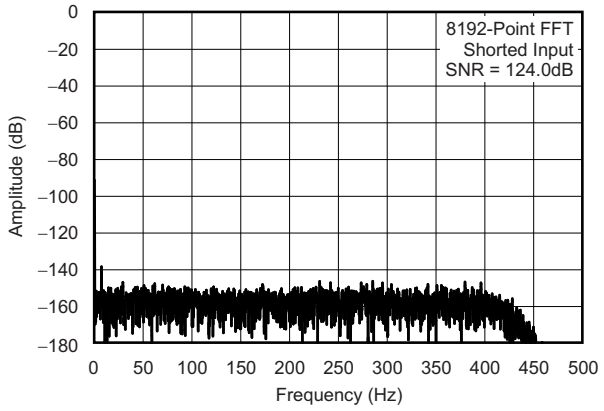

Figure 4. Output Spectrum

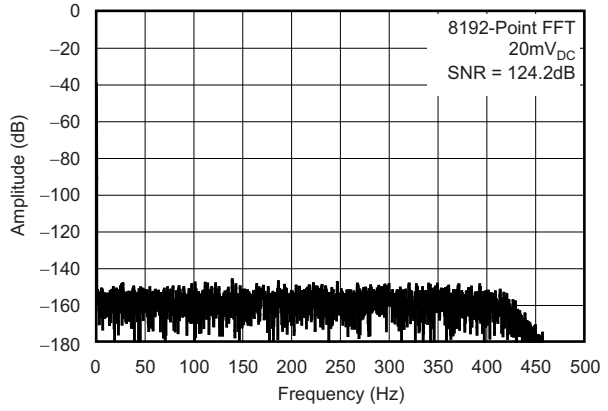

Figure 5. Output Spectrum

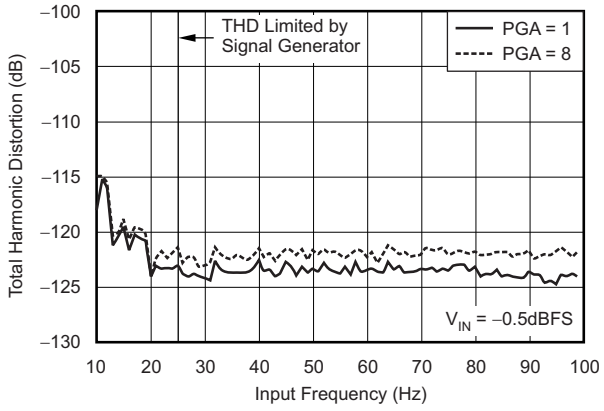

Figure 6. THD vs Input Frequency

Typical Characteristics (continued)

At +25°C, AVDD = +2.5V, AVSS = –2.5V, f_{CLK} = 4.096MHz, VREFP = +2.5V, VREFN = –2.5V, DVDD = +3.3V, PGA = 1, CAPN – CAPP = 10nF, and f_{DATA} = 1000SPS, unless otherwise noted.

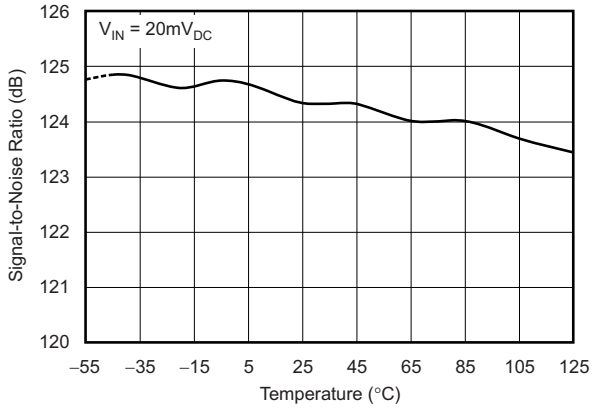

Figure 7. SNR vs Temperature

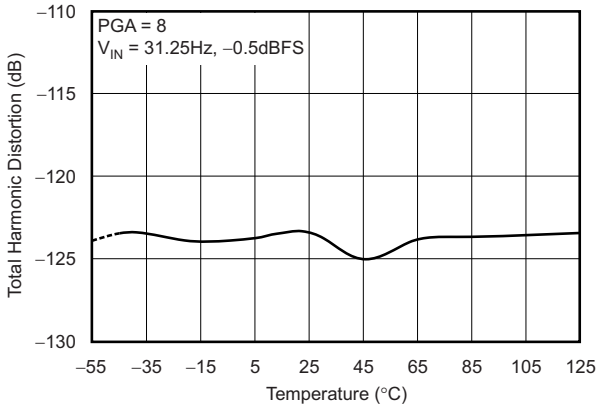

Figure 8. THD vs Temperature

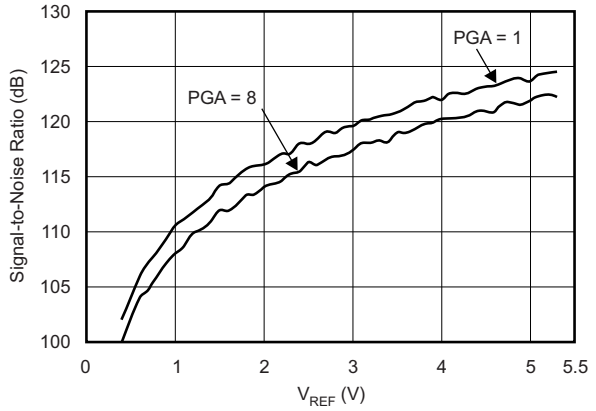

Figure 9. SNR vs Reference Voltage

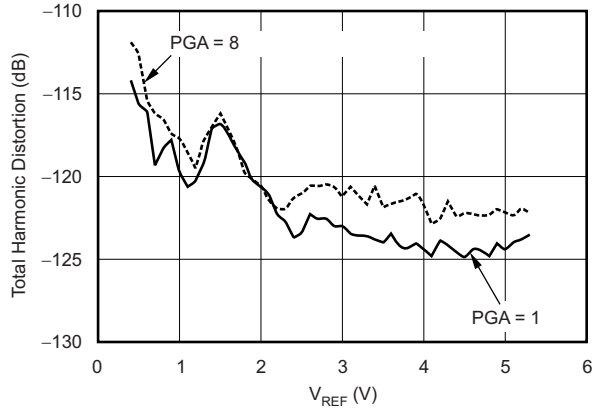

Figure 10. THD vs Reference Voltage

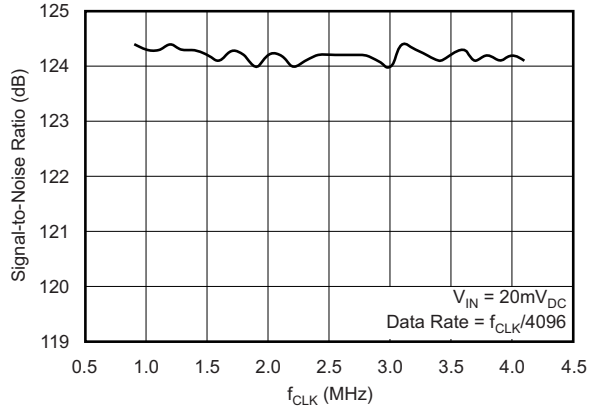

Figure 11. SNR vs Clock Frequency

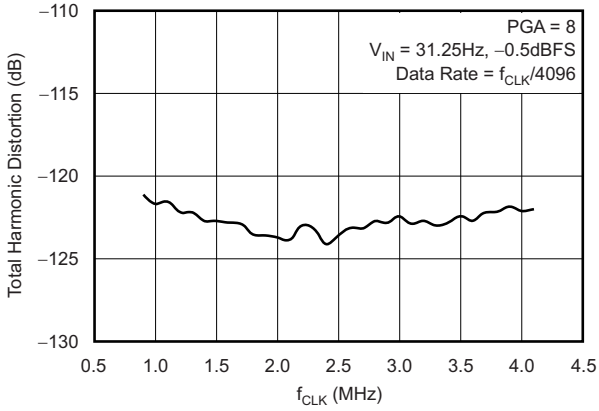

Figure 12. THD vs Clock Frequency

Copyright © 2007–2015, Texas Instruments Incorporated

Typical Characteristics (continued)

At +25°C, AVDD = +2.5V, AVSS = –2.5V, f_{CLK} = 4.096MHz, VREFP = +2.5V, VREFN = –2.5V, DVDD = +3.3V, PGA = 1, CAPN – CAPP = 10nF, and f_{DATA} = 1000SPS, unless otherwise noted.

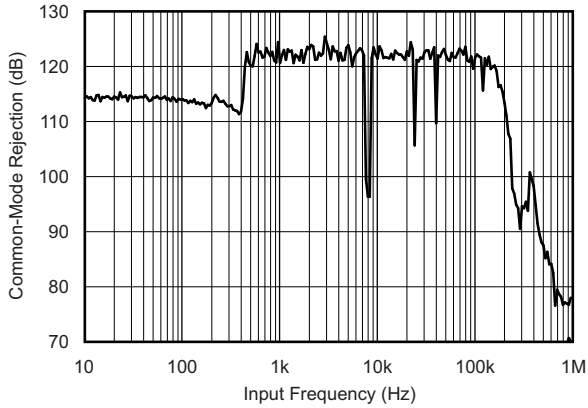

Figure 13. CMR vs Input Frequency

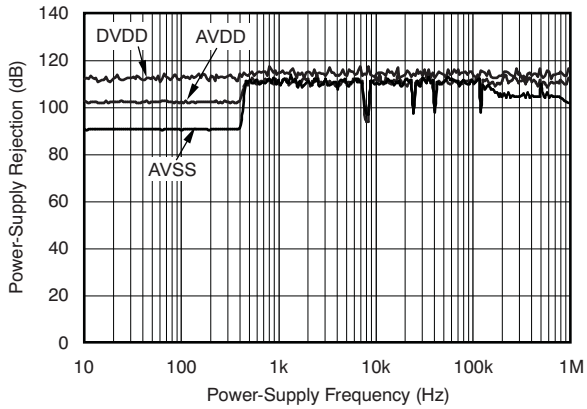

Figure 14. Power-Supply Rejection vs Frequency

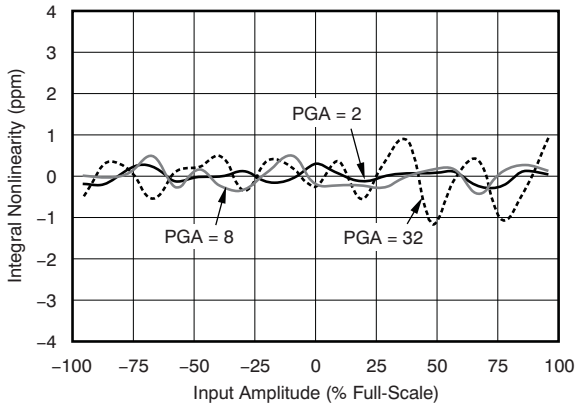

Figure 15. INL vs Input Amplitude

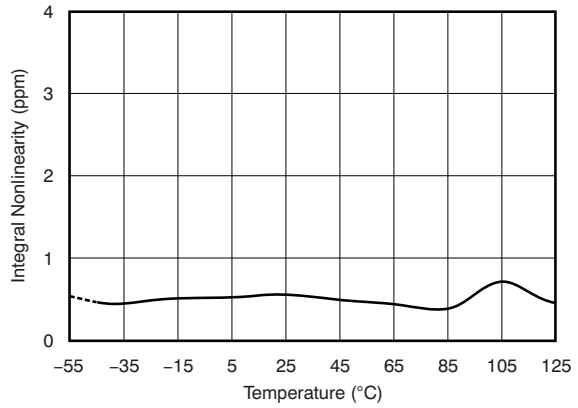

Figure 16. INL vs Temperature

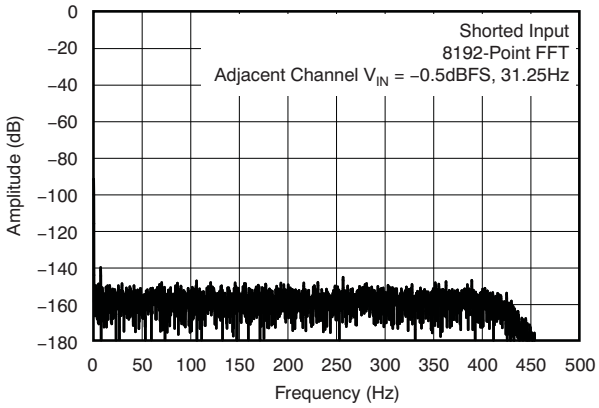

Figure 17. Crosstalk Output Spectrum

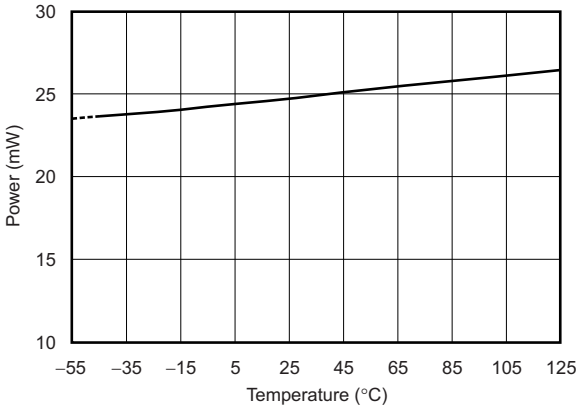

Figure 18. Power vs Temperature

Typical Characteristics (continued)

At +25°C, AVDD = +2.5V, AVSS = –2.5V, f_{CLK} = 4.096MHz, VREFP = +2.5V, VREFN = –2.5V, DVDD = +3.3V, PGA = 1, CAPN – CAPP = 10nF, and f_{DATA} = 1000SPS, unless otherwise noted.

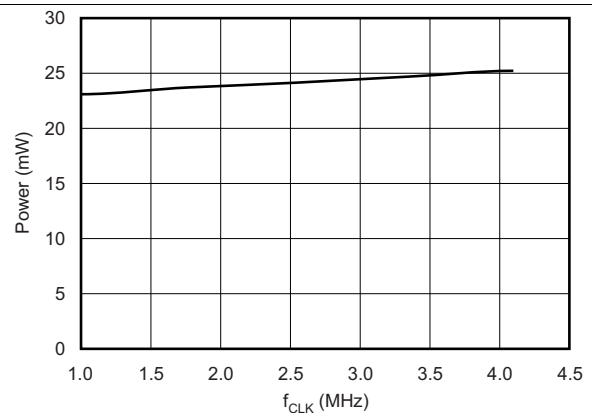

Figure 19. Power vs Clock Frequency

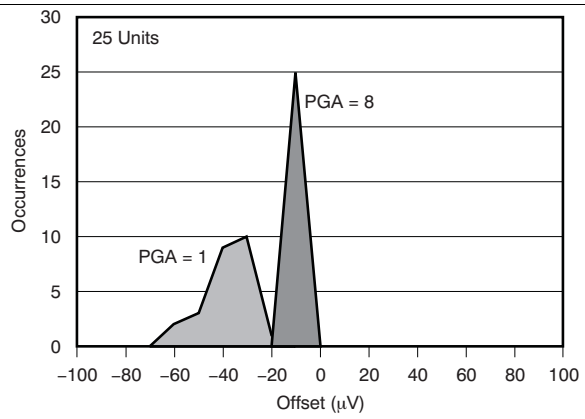

Figure 20. Offset Histogram

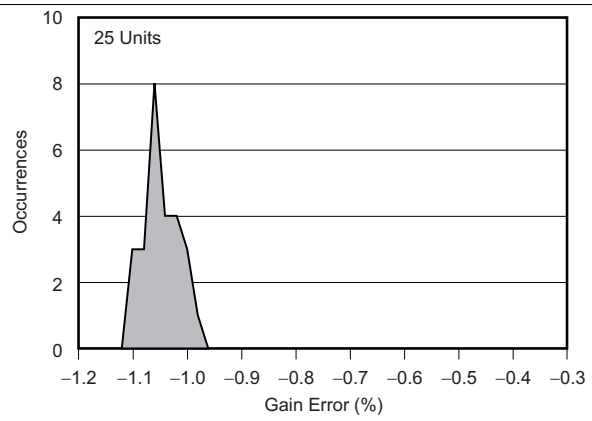

Figure 21. Gain Error Histogram

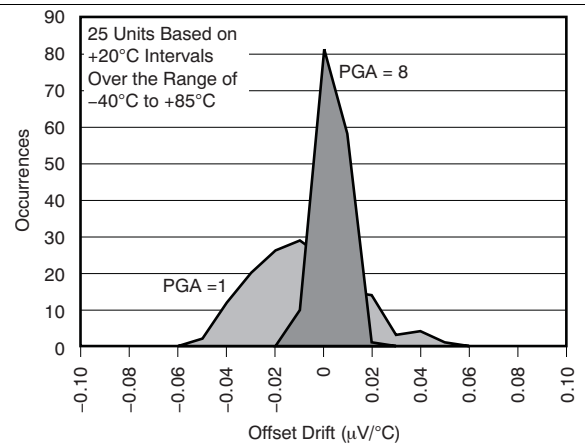

Figure 22. Offset Drift Histogram

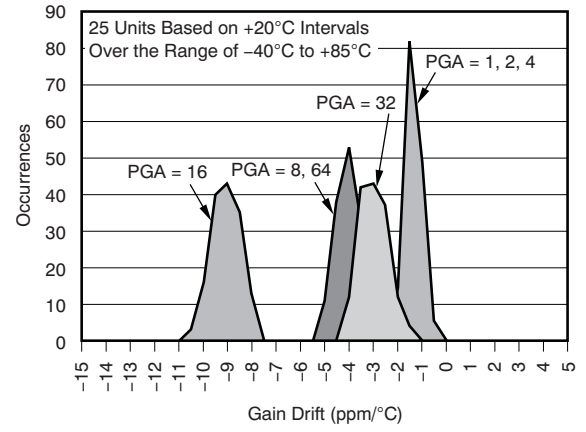

Figure 23. Gain Drift Histogram

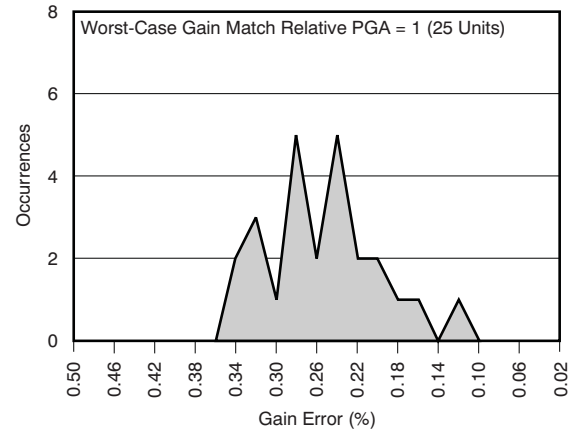

Figure 24. Gain Match Histogram

Copyright © 2007–2015, Texas Instruments Incorporated

9 Overview

The ADS1282 is a high-performance analog-to-digital converter (ADC) intended for energy exploration, seismic monitoring, chomatography, and other exacting applications. The converter provides 24- or 32-bit output data in data rates from 250SPS to 4000SPS. Figure 25 shows the block diagram of the ADS1282.

The two-channel input MUX allows five configurations: Input 1; Input 2; Input 1 and Input 2 shorted together; shorted with 400Ω test; and common-mode test. The input MUX is followed by a continuous time PGA, featuring very low noise of 5nV/√Hz. The PGA is controlled by register settings, allowing gains of 1 to 64.

The inherently-stable, fourth-order, delta-sigma modulator measures the differential input signal V_{IN} = (AINP – AINN) PGA against the differential reference V_{REF} = (VREFP – VREFN). A digital output (MFLAG) indicates that the modulator is in overload as a result of an overdrive condition. The modulator output is available directly on the MCLK, M0, and M1 output pins. The modulator connects to an on-chip digital filter that provides the output code readings.

The digital filter consists of a variable decimation rate, fifth-order sinc filter followed by a variable phase, decimate-by-32, finite-impulse response (FIR) low-pass filter with programmable phase, and then by an adjustable high-pass filter for dc removal of the output reading. The output of the digital filter can be taken from the sinc, the FIR low-pass, or the infinite impulse response (IIR) high-pass sections.

Gain and offset registers scale the digital filter output to produce the final code value. The scaling feature can be used for calibration and sensor gain matching. The output data word is provided as either a 24-bit word or a full 32-bit word, allowing complete utilization of the inherently high resolution.

The SYNC input resets the operation of both the digital filter and the modulator, allowing synchronization conversions of multiple ADS1282 devices to an external event. The SYNC input supports a continuously-toggled input mode that accepts an external data frame clock locked to the conversion rate.

The $\overline{\text{RESET}}$ input resets the register settings and also restarts the conversion process. The $\overline{\text{PWDN}}$ input sets the device into a micro-power state. Note that register settings are not retained in $\overline{\text{PWDN}}$ mode. Use the STANDBY command in its place if it is desired to retain register settings (the quiescent current in the Standby mode is slightly higher).

Noise-immune Schmitt-trigger and clock-qualified inputs ($\overline{\text{RESET}}$ and SYNC) provide increased reliability in high-noise environments. The serial interface is used to read conversion data, in addition to reading from and writing to the configuration registers.

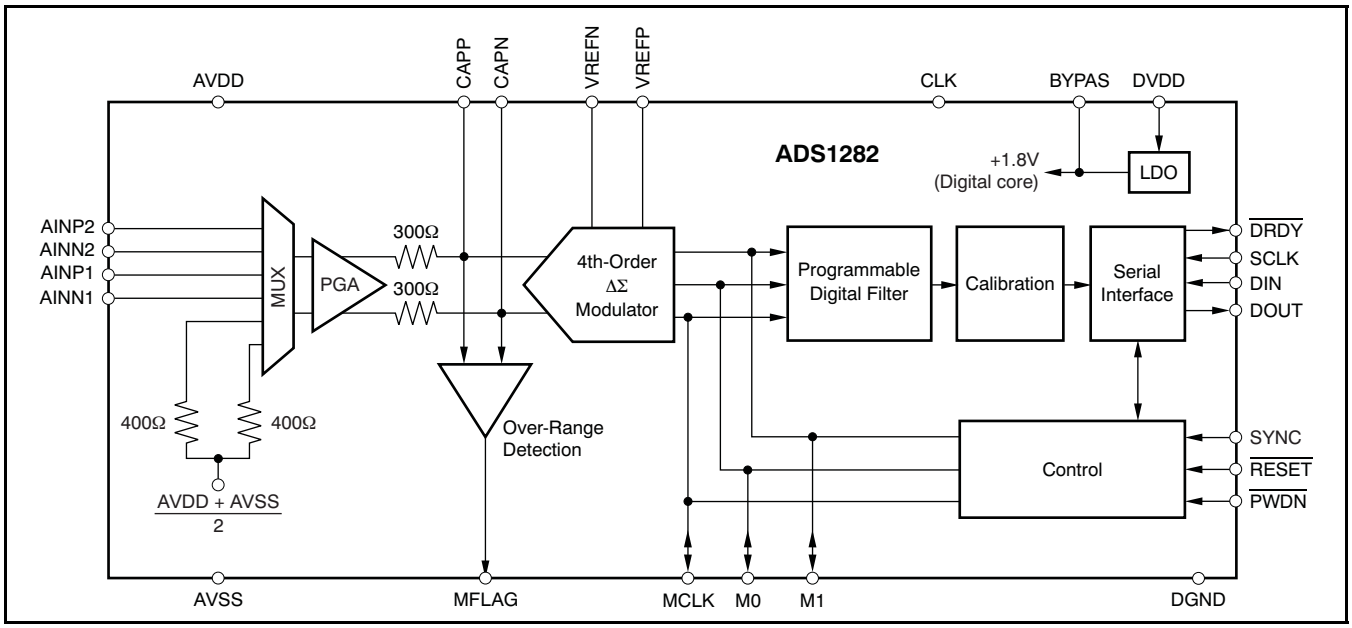

Figure 25. ADS1282 Block Diagram

The device features unipolar and bipolar analog power supplies (AVDD and AVSS, respectively) for input range flexibility and a digital supply accepting 1.8V to 3.3V. The analog supplies may be set to +5V to accept unipolar signals (with input offset) or set lower in the range of ±2.5V to accept true bipolar input signals (ground referenced).

An internal sub-regulator is used to supply the digital core from DVDD. The BYPAS pin (pin 28) is the sub-regulator output and requires a 1µF capacitor for noise reduction. BYPAS should not be used to drive external circuitry.

9.1 ADS1282H

The *H* version of the ADS1282 has an improved input stage compared to the base version ADS1282. The ADS1282H design is optimized for use with high impedance sensors, such as hydrophones. The ADS1282H is recommended when interfacing to hydrophone sensors and can also be used for low-impedance, geophone sensors as well. The base version ADS1282 should only be used with low-impedance geophone sensors, where the associated external terminating resistance is < 50kΩ (per resistor).

9.2 Noise Performance

The ADS1282 offers outstanding noise performance (SNR). SNR depends on the data rate, the PGA setting. As the bandwidth is reduced by decreasing the data rate, the SNR improves correspondingly. Similarly, as the PGA gain is increased, the SNR decreases. Table 1 summarizes the noise performance versus data rate and PGA setting.

9.3 Input-Referred Noise

The input-referred noise is related to SNR by Equation 1:

$$SNR = 20\log \frac{FSR_{RMS}}{N_{RMS}}$$

where:

FSR_{RMS} = Full-scale range RMS = $V_{REF}/(2 \times \sqrt{2} \times PGA)$

N_{RMS} = Noise RMS (input-referred) (1)

9.4 Idle Tones

The ADS1282 modulator incorporates an internal dither signal that randomizes the idle tone energy. Low-level idle tones may still be present, typically –137dB below full-scale. The low-level idle tones can be shifted out of the passband with an external offset = 20mV/PGA. See the *Application Information* section for the recommended offset circuit.

Table 1. Signal-to-Noise Ratio (dB)(1)

DATA RATE (SPS)	PGA						
	1	2	4	8	16	32	64
250	130	130	129	128	125	119	114
500	127	127	126	125	122	116	111
1000	124	124	123	122	119	113	108
2000	121	121	120	119	116	111	106
4000	118	118	117	116	113	108	103

(1) $V_{IN} = 20mV_{DC}/PGA$.

Copyright © 2007–2015, Texas Instruments Incorporated

9.5 Analog Inputs and Multiplexer

A diagram of the input multiplexer is shown in Figure 26.

ESD diodes protect the multiplexer inputs. If either input is taken below AVSS – 0.3V or above AVDD + 0.3V, the ESD protection diodes may turn on. If these conditions are possible, external Schottky clamp diodes and/or series resistors may be required to limit the input current to safe values (see the Absolute Maximum Ratings table).

Also, overdriving one unused input may affect the conversions of the other input. If overdriven inputs are possible, it is recommended to clamp the signal with external Schottky diodes.

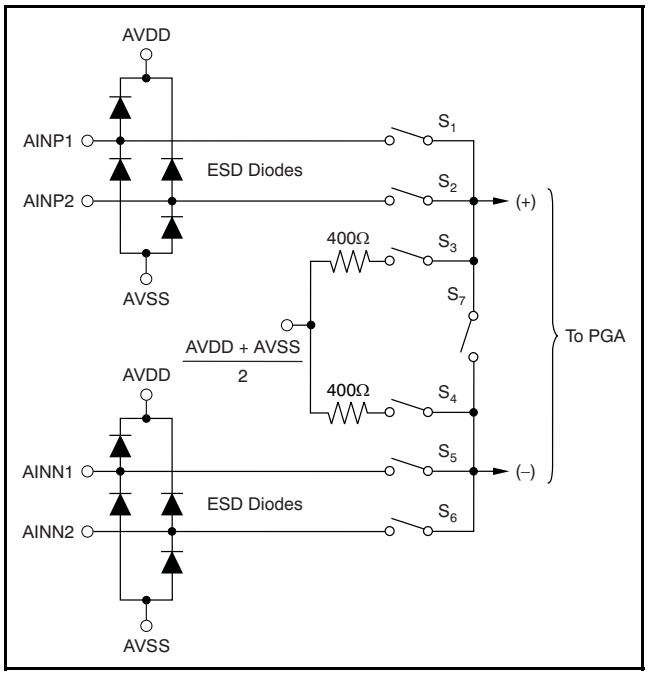

Figure 26. Analog Inputs and Multiplexer

The specified input operating range of the PGA is shown in Equation 2:

$$AVSS + 0.7V < (AINN \text{ or } AINP) < AVDD - 1.25V \quad (2)$$

Absolute input levels (input signal level and common-mode level) should be maintained within these limits for best operation.

The multiplexer connects one of the two external differential inputs to the preamplifier inputs, in addition to internal connections for various self-test modes. Table 2 summarizes the multiplexer configurations for Figure 26.

Analog Inputs and Multiplexer (continued)

Table 2. Multiplexer Modes

MUX[2:0]	SWITCHES	DESCRIPTION
000	S_1, S_5	AINP1 and AINN1 connected to preamplifier
001	S_2, S_6	AINP2 and AINN2 connected to preamplifier
010	S_3, S_4	Preamplifier inputs shorted together through 400Ω internal resistors
011	S_1, S_5, S_2, S_6	AINP1, AINN1 and AINP2, AINN2 connected together and to the preamplifier
100	S_6, S_7	External short, preamplifier inputs shorted to AINN2 (common-mode test)

The typical on-resistance (R_{ON}) of the multiplexer switch is 30Ω. When the multiplexer is used to drive an external load on one input by a signal generator on the other input, on-resistance and on-resistance amplitude dependency can lead to measurement errors. Figure 27 shows THD versus load resistance and amplitude. Note that THD improves with high-impedance loads and with lower amplitude drive signals. The data are measured with the circuit from Figure 28 with MUX[2:0] = 011.

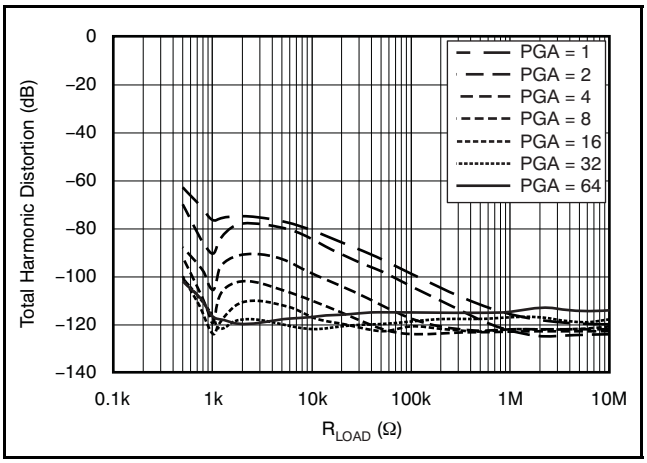

Figure 27. THD Versus External Load and Signal Magnitude (PGA) (see Figure 28)

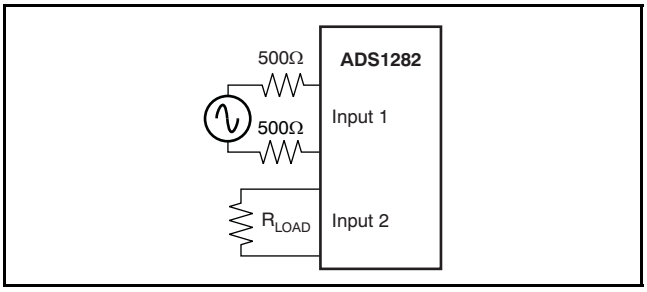

Figure 28. Driving an External Load Through the Mux

9.6 PGA (Programmable Gain Amplifier)

The PGA of the ADS1282 is a low-noise, continuous-time, differential-in/differential-out CMOS amplifier. The gain is programmable from 1 to 64, set by register bits, PGA[2:0]. The PGA differentially drives the modulator through 300Ω internal resistors. A C0G capacitor (10nF typical) must be connected to CAPP and CAPN to filter modulator sampling glitches. The external capacitor also serves as an anti-alias filter. The corner frequency is given in Equation 3:

$$f_P = \frac{1}{6.3 \times 600 \times C} \quad (3)$$

Referring to Figure 29, amplifiers A_1 and A_2 are chopped to remove the offset, offset drift, and the 1/f noise. Chopping moves the effects to $f_{CLK}/128$ (8kHz), which is safely out of the passband. Chopping can be disabled by setting the CHOP register bit = 0. When chopping is disabled, the input impedance of the PGA increases substantially (100GΩ). As shown in Figure 30, chopping maintains flat noise density; if chopping is disabled, however, it results in a rising 1/f noise profile.

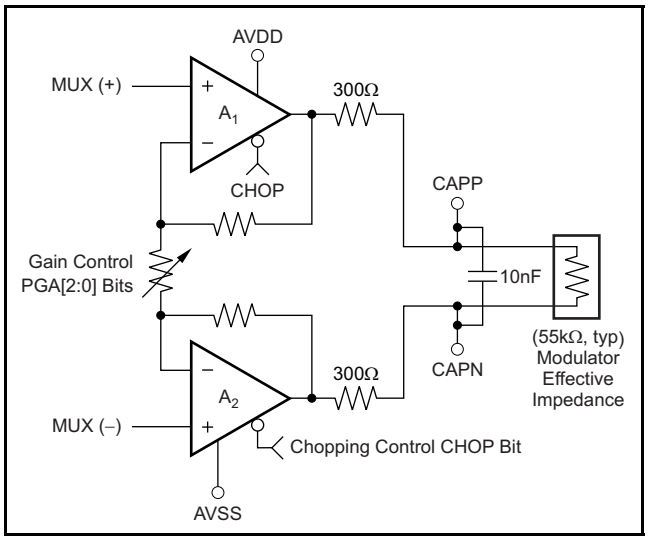

Figure 29. PGA Block Diagram

PGA (Programmable Gain Amplifier) (continued)

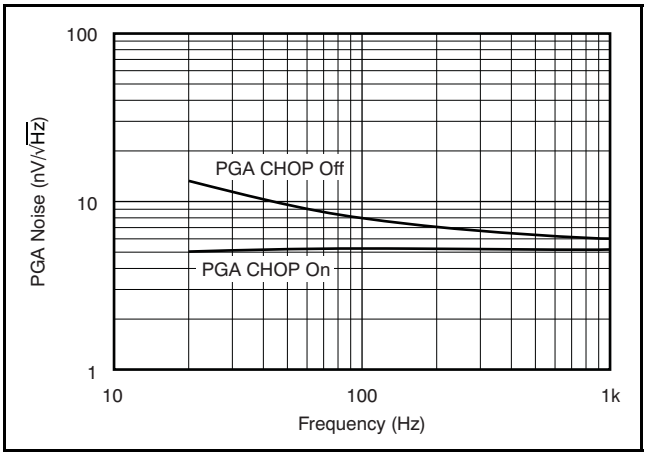

Figure 30. PGA Noise

The PGA has programmable gains from 1 to 64. Table 3 shows the register bit setting for the PGA and resulting full-scale differential range.

Table 3. PGA Gain Settings

PGA[2:0]	GAIN	DIFFERENTIAL INPUT RANGE (V)(1)
000	1	±2.5
001	2	±1.25
010	4	±0.625
011	8	±0.312
100	16	±0.156
101	32	±0.078
110	64	±0.039

(1) V_{REF} = 5V.

The specified output operating range of the PGA is shown in Equation 4:

$$AVSS + 0.4V < (CAPN \text{ or } CAPP) < AVDD - 0.4V \quad (4)$$

PGA output levels (signal plus common-mode) should be maintained within these limits for best operation.

Copyright © 2007–2015, Texas Instruments Incorporated

9.7 ADC

The ADC block of the ADS1282 is composed of two sections: a high-accuracy modulator and a programmable digital filter.

9.8 Modulator

The high-performance modulator is an inherently-stable, fourth-order, ΔΣ, 2 + 2 pipelined structure, as Figure 31 shows. It shifts the quantization noise to a higher frequency (out of the passband) where digital filtering can easily remove it. The modulator can be filtered either by the on-chip digital filter or by use of post-processing filters.

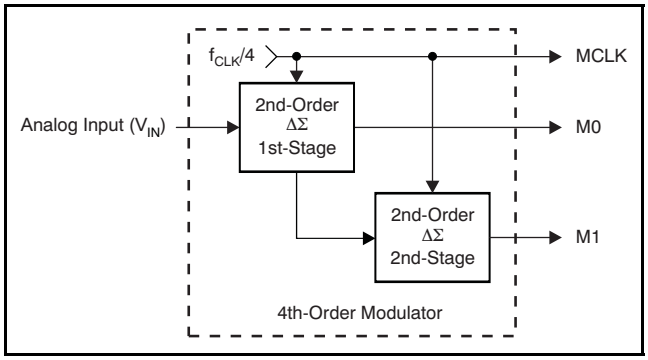

Figure 31. Fourth-Order Modulator

The modulator first stage converts the analog input voltage into a pulse-code modulated (PCM) stream. When the level of differential analog input (AINP – AINN) is near one-half the level of the reference voltage 1/2 × (VREFP – VREFN), the '1' density of the PCM data stream is at its highest. When the level of the differential analog input is near zero, the PCM '0' and '1' densities are nearly equal. At the two extremes of the analog input levels (+FS and –FS), the '1' density of the PCM streams is approximately +90% and +10%, respectively.

The modulator second stage produces a '1' density data stream designed to cancel the quantization noise of the first stage. The data streams of the two stages are then combined before the digital filter stage, as shown in Equation 5.

$$Y[n] = 3M0[n-2] - 6M0[n-3] + 4M0[n-4] + 9(M1[n] - 2M1[n-1] + M1[n-2]) \quad (5)$$

M0[n] represents the most recent first-stage output while M0[n – 1] is the previous first-stage output. When the modulator output is enabled, the digital filter shuts down to save power.

The modulator is optimized for input signals within a 4kHz passband. As Figure 32 shows, the noise shaping of the modulator results in a sharp increase in noise above 6kHz. The modulator has a chopped input structure that further reduces noise within the passband. The noise moves out of the passband and

Modulator (continued)

appears at the chopping frequency ($f_{CLK}/512$ = 8kHz). The component at 5.8kHz is the tone frequency, shifted out of band by an external 20mV/PGA offset. The frequency of the tone is proportional to the applied dc input and is given by PGA × V_{IN}/0.003 (in kHz).

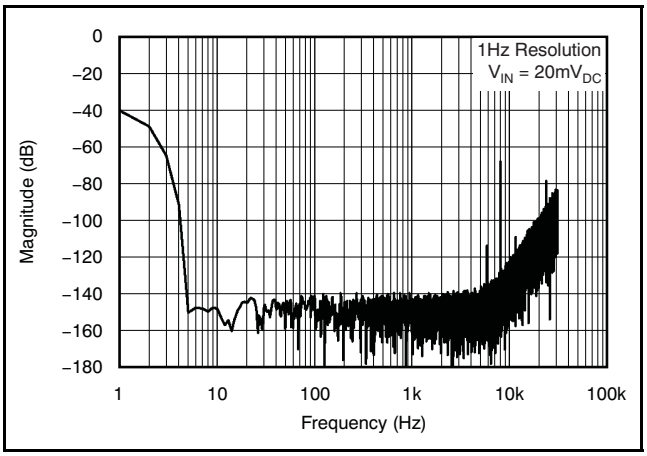

Figure 32. Modulator Output Spectrum

9.9 Modulator Over-Range

The ADS1282 modulator is inherently stable, and therefore, has predictable recovery behavior resulting from an input overdrive condition. The modulator does not exhibit self-resetting behavior, which often results in an unstable output data stream.

The ADS1282 modulator outputs a 1s density data stream at 90% duty cycle with the positive full-scale input signal applied (10% duty cycle with the negative full-scale signal). If the input is overdriven past 90% modulation, but below 100% modulation (10% and 0% for negative overdrive, respectively), the modulator remains stable and continues to output the 1s density data stream. The digital filter may or may not clip the output codes to +FS or –FS, depending on the duration of the overdrive. When the input returns to the normal range from a long duration overdrive (worst case), the modulator returns immediately to the normal range, but the group delay of the digital filter delays the return of the conversion result to within the linear range (31 readings for linear phase FIR). 31 additional readings (62 total) are required for completely settled data.

If the inputs are sufficiently overdriven to drive the modulator to full duty cycle, all 1s or all 0s, the modulator enters a stable saturated state. The digital output code may clip to +FS or –FS, again depending on the duration. A small duration overdrive may not always clip the output code. When the input returns to

Copyright © 2007–2015, Texas Instruments Incorporated

Modulator Over-Range (continued)

the normal range, the modulator requires up to 12 modulator clock cycles (f_{MOD}) to exit saturation and return to the linear region. The digital filter requires an additional 62 conversions for fully settled data (linear phase FIR).

In the extreme case of over-range, either input is overdriven, exceeding the voltage of either analog supply voltage plus an internal ESD diode drop. The internal diodes begin to conduct and the signal on the input is clipped. When the input overdrive is removed, the diodes recover quickly. Keep in mind that the input current must be limited to 100mA peak or 10mA continuous if an overvoltage condition is possible.

9.10 Modulator Input Impedance

The modulator samples the buffered input voltage with an internal capacitor to perform conversions. The charging of the input sampling capacitor draws a transient current from the PGA output. The average value of the current can be used to calculate an effective input impedance of $R_{EFF} = 1/(f_{MOD} \times C_S)$.

Where:

f_{MOD} = Modulator sample frequency (CLK / 4)

C_S = Input sampling capacitor (17pF, typ)

The resulting modulator input impedance for CLK = 4.096MHz is 55kΩ. The modulator input impedance and the PGA output resistors result in a systematic gain error of –1%. C_S can vary ±20% over production lots, affecting the gain error.

9.11 Modulator Over-Range Detection (MFLAG)

The ADS1282 has a fast-responding over-range detection that indicates when the differential input exceeds 100% or –100% full-scale. The threshold tolerance is ±2.5%.The MFLAG output asserts high when in an over-range condition. As Figure 33 and Figure 34 illustrate, the absolute differential input is compared to 100% of range. The output of the comparator is sampled at the rate of $f_{MOD}/2$, yielding the MFLAG output. The minimum MFLAG pulse width is $f_{MOD}/2$.

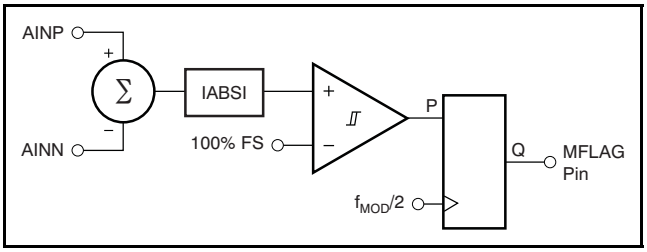

Figure 33. Modulator Over-Range Block Diagram

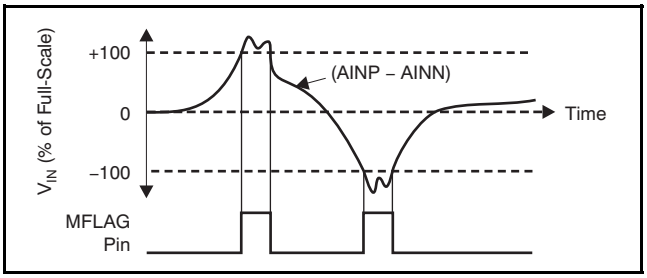

Figure 34. Modulator Over-Range Flag Operation

Copyright © 2007–2015, Texas Instruments Incorporated

9.12 Modulator Output Mode

The modulator digital stream output is accessible directly, bypassing and disabling the internal digital filter. The modulator output mode is activated by setting the CONFIG0 register bits FILTR[1:0] = 00. Pins M0 and M1 then become the modulator data outputs and the MCLK becomes the modulator clock output. When not in the modulator mode, these pins are inputs and must be tied.

The modulator output is composed of three signals: one output for the modulator clock (MCLK) and two outputs for the modulator data (M0 and M1). The modulator clock output rate is f_{MOD} (f_{CLK} / 4). Synchronization resets the MCLK phase, as shown in Figure 35. The SYNC input is latched on the rising edge of CLK. The MCLK resets and the next rising edge of MCLK occurs three or five CLK periods later, as shown in Figure 35.

The modulator output data are two bits wide, which must be merged together before being filtered. Use the time domain equation of Equation 5 to merge the data outputs.

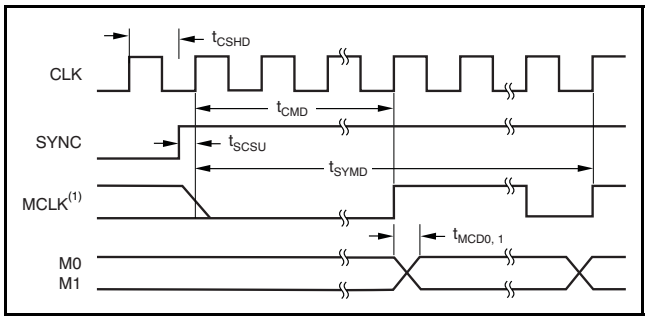

(1) MCLK = f_{CLK} / 4.

Figure 35. Modulator Mode Timing

9.13 Voltage Reference Inputs (VREFP, VREFN)

The voltage reference for the ADS1282 is the differential voltage between VREFP and VREFN: V_{REF} = VREFP – VREFN. The reference inputs use a structure similar to that of the analog inputs with the circuitry of the reference inputs shown in Figure 36. The average load presented by the switched capacitor reference input can be modeled with an effective differential impedance of $R_{EFF} = t_{SAMPLE}/C_{IN}$ ($t_{SAMPLE} = 1/f_{MOD}$). Note that the effective impedance of the reference inputs loads the external reference.

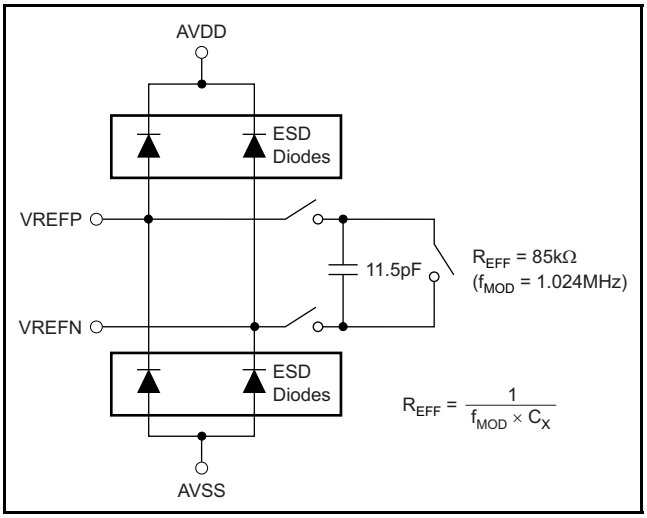

Figure 36. Simplified Reference Input Circuit

Table 4. Modulator Output Timing For Figure 35

PARAMETER	DESCRIPTION	MIN	TYP	MAX	UNIT
$t_{MCD0, 1}$	MCLK rising edge to M0, M1 valid propagation delay (1)			100	ns
t_{CMD}	CLK rising edge to MCLK rising edge reset time (after synchronization)		3		$1/f_{CLK}$
t_{CSHD}	CLK to SYNC hold time to not latch on CLK edge	10			ns
t_{SCSU}	SYNC to CLK setup time to latch on CLK edge	10			ns
t_{SYMD}	SYNC to stable bit stream			16	$1/f_{MOD}$

(1) Load on M0 and M1 = 20pF || 100kΩ.

Copyright © 2007–2015, Texas Instruments Incorporated

The ADS1282 reference inputs are protected by ESD diodes. In order to prevent these diodes from turning on, the voltage on either input must stay within the range shown in Equation 6:

$$AVSS - 300mV < (VREFP \text{ or } VREFN) < AVDD + 300mV \quad (6)$$

Note that the minimum valid input for VREFN is AVSS – 0.1V and maximum valid input for VREFP is AVDD + 0.1V.

A high-quality +5V reference voltage is necessary for achieving the best performance from the ADS1282. Noise and drift on the reference degrade overall system performance, and it is critical that special care be given to the circuitry generating the reference voltages in order to achieve full performance. See the *Application Information* section for reference recommendations.

9.14 Digital Filter

The digital filter receives the modulator output and decimates the data stream. By adjusting the amount of filtering, tradeoffs can be made between resolution and data rate: filter more for higher resolution, filter less for higher data rate.

The digital filter is comprised of three cascaded filter stages: a variable-decimation, fifth-order sinc filter; a fixed-decimation FIR, low-pass filter (LPF) with selectable phase; and a programmable, first-order, high-pass filter (HPF), as shown in Figure 37.

The output can be taken from one of the three filter blocks, as Figure 37 shows. To implement the digital filter completely off-chip, select the filter bypass setting (modulator output). For partial filtering by the ADS1282, select the sinc filter output. For complete on-chip filtering, activate both the sinc and FIR stages. The HPF can then be included to remove dc and low frequencies from the data. Table 5 shows the filter options.

Digital Filter (continued)

Table 5. Digital Filter Selection

FILTR[1:0] BITS	DIGITAL FILTERS SELECTED
00	Bypass; modulator output mode
01	Sinc
10	Sinc + FIR
11	Sinc + FIR + HPF (low-pass and high-pass)

9.14.1 Sinc Filter Stage (Sinx/X)

The sinc filter is a variable decimation rate, fifth-order, low-pass filter. Data are supplied to this section of the filter from the modulator at the rate of f_{MOD} ($f_{CLK}/4$). The sinc filter attenuates the high-frequency noise of the modulator, then decimates the data stream into parallel data. The decimation rate affects the overall data rate of the converter; it is set by the DR[2:0] register bits, as shown in Table 6.

Equation 7 shows the scaled Z-domain transfer function of the sinc filter.

$$H(Z) = \left[\frac{1 - Z^{-N}}{N(1 - Z^{-1})}\right]^5$$

Where:

N = decimation ratio (7)

Table 6. Sinc Filter Data Rates (CLK = 4.096MHz)

DR[2:0] REGISTER	DECIMATION RATIO (N)	SINC DATA RATE (SPS)
000	128	8,000
001	64	16,000
010	32	32,000
011	16	64,000
100	8	128,000

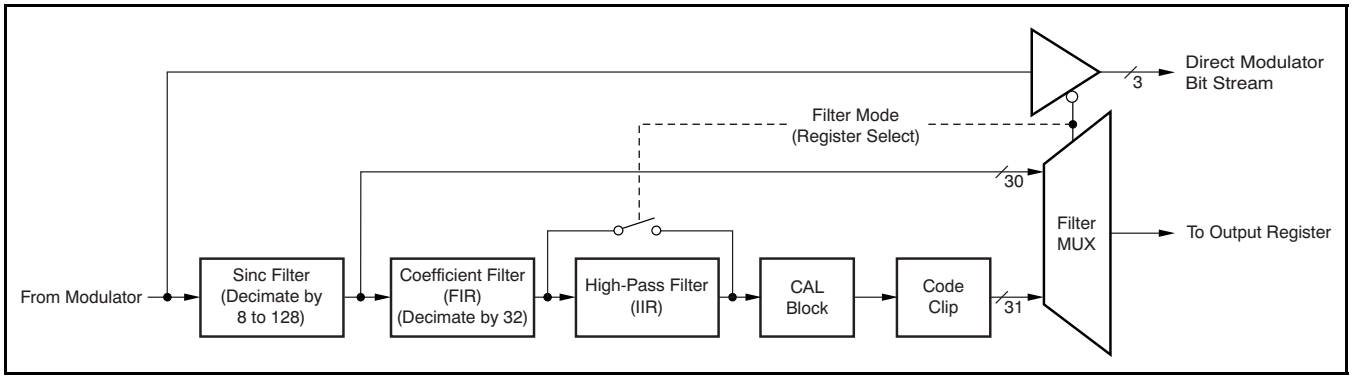

Figure 37. Digital Filter and Output Code Processing

Copyright © 2007–2015, Texas Instruments Incorporated

Equation 8 shows the frequency domain transfer function of the sinc filter.

$$|H(f)| = \left| \frac{\sin\left(\frac{\pi N \times f}{f_{MOD}}\right)}{N \sin\left(\frac{\pi \times f}{f_{MOD}}\right)} \right|^5 \quad (8)$$

where:

N = decimation ratio (see Table 6)

The sinc filter has notches (or zeroes) that occur at the output data rate and multiples thereof. At these frequencies, the filter has zero gain. Figure 38 shows the frequency response of the sinc filter and Figure 39 shows the roll-off of the sinc filter.

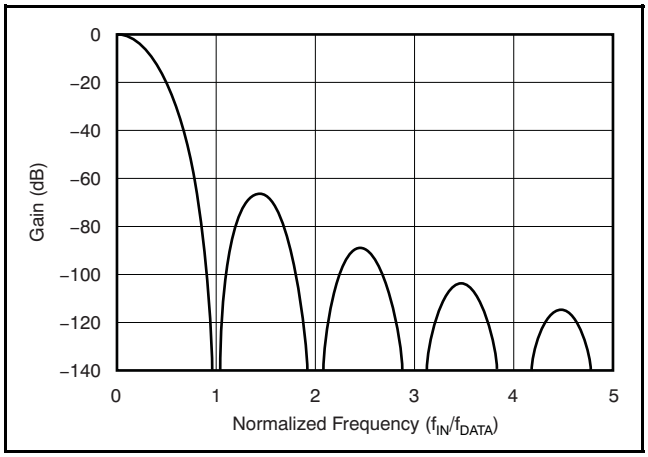

Figure 38. Sinc Filter Frequency Response (N = 32)

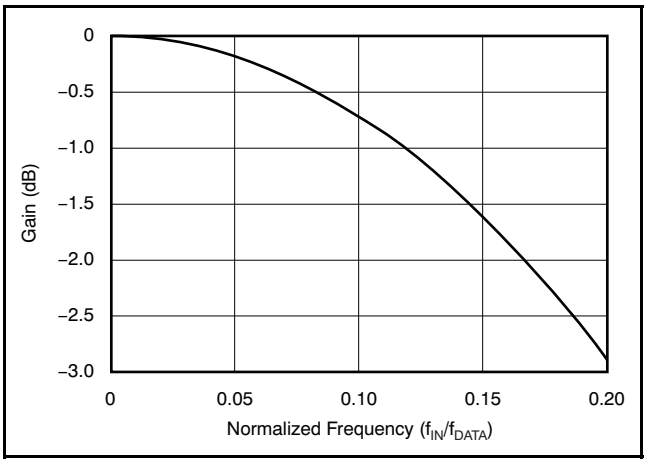

Figure 39. Sinc Filter Roll-Off

9.14.2 FIR Stage

The second stage of the ADS1282 digital filter is an FIR low-pass filter. Data are supplied to this stage from the sinc filter. The FIR stage is segmented into four sub-stages, as shown in Figure 40. The first two sub-stages are half-band filters with decimation ratios of 2. The third sub-stage decimates by 4 and the fourth sub-stage decimates by 2. The overall decimation of the FIR stage is 32. Note that two coefficient sets are used for the third and fourth sections, depending on the phase selection. Table 34 (in the Appendix section at the end of this document) lists the FIR stage coefficients. Table 7 lists the data rates and overall decimation ratio of the FIR stage.

Table 7. FIR Filter Data Rates

DR[2:0] REGISTER	DECIMATION RATIO (N)	FIR DATA RATE (SPS)
000	4096	250
001	2048	500
010	1024	1000
011	512	2000
100	256	4000

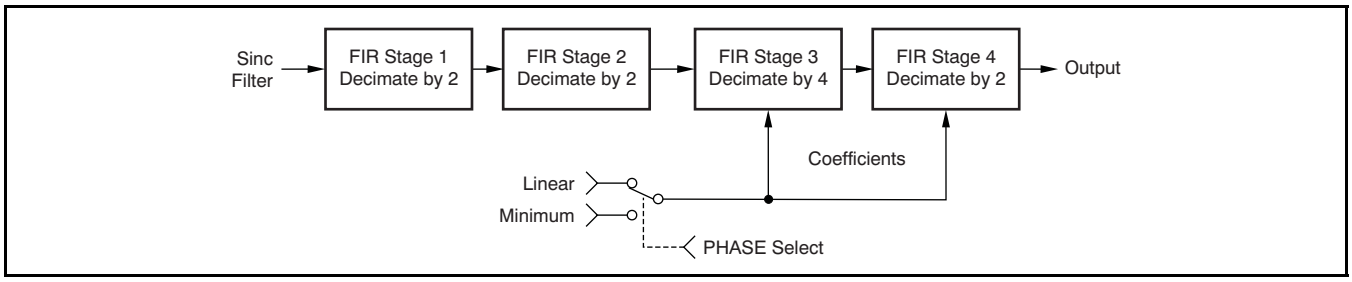

Figure 40. FIR Filter Sub-Stages

As shown in Figure 41, the FIR frequency response provides a flat passband to 0.375 of the data rate (±0.003dB passband ripple). Figure 42 shows the transition from passband to stop band.

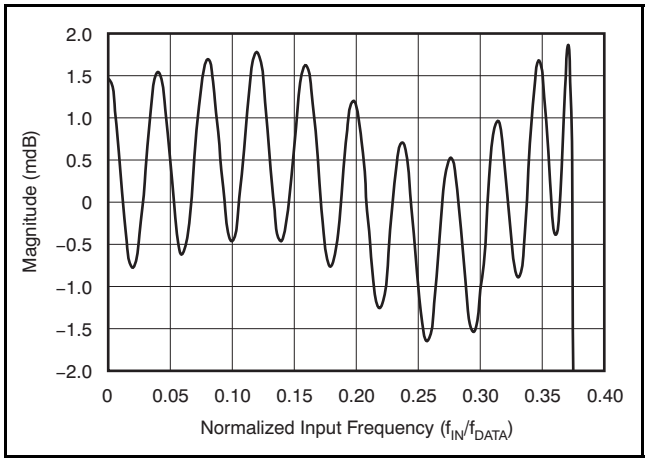

Figure 41. FIR Passband Magnitude Response (f_{DATA} = 500Hz)

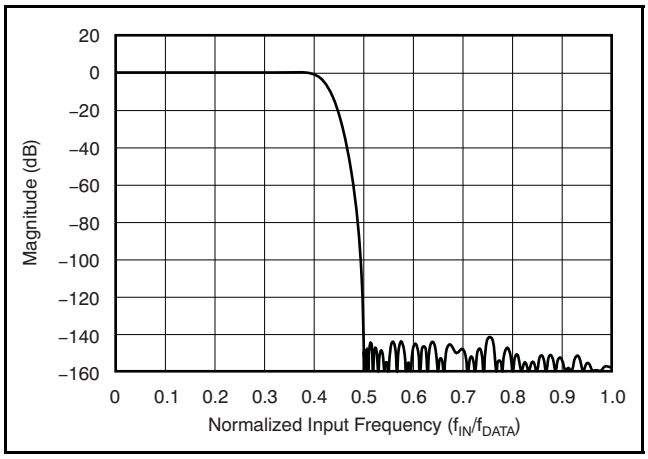

Figure 42. FIR Transition Band Magnitude Response

Although not shown in Figure 42, the passband response repeats at multiples of the modulator frequency ($Nf_{MOD} - f_0$ and $Nf_{MOD} + f_0$, where N = 1, 2, etc. and f_0 = passband). These image frequencies, if present in the signal and not externally filtered, fold back (or alias) into the passband and cause errors. A low-pass signal filter reduces the effect of aliasing. Often, the RC low-pass filter provided by the PGA output resistors and the external capacitor connected to CAPP and CAPN provides sufficient signal attenuation.

9.15 Group Delay and Step Response

The FIR block is implemented as a multi-stage FIR structure with selectable linear or minimum phase response. The passband, transition band, and stop band responses of the filters are nearly identical but differ in the respective phase responses.

9.15.1 Linear Phase Response

Linear phase filters exhibit constant delay time versus input frequency (that is, constant group delay). Linear phase filters have the property that the time delay from any instant of the input signal to the same instant of the output data is constant and is independent of the signal nature. This filter behavior results in essentially zero phase error when analyzing multi-tone signals. However, the group delay and settling time of the linear phase filter are somewhat larger than the minimum phase filter, as shown in Figure 43.

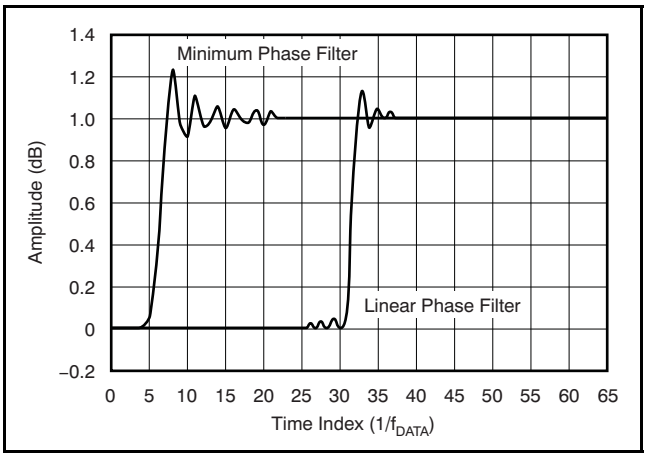

Figure 43. FIR Step Response

Copyright © 2007–2015, Texas Instruments Incorporated

Group Delay and Step Response (continued)

9.15.2 Minimum Phase Response

The minimum phase filter provides a short delay from the arrival of an input signal to the output, but the relationship (phase) is not constant versus frequency, as shown in Figure 44. The filter phase is selected by the PHS bit, as Table 8 shows.

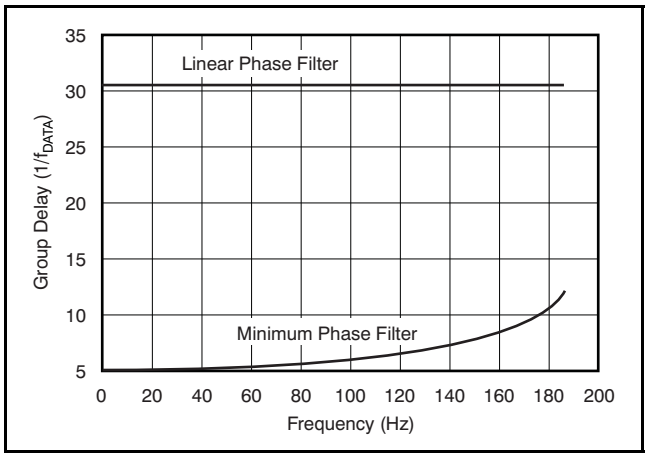

Figure 44. FIR Group Delay (f_{DATA} = 500Hz)

Table 8. FIR Phase Selection

PHS BIT	FILTER PHASE
0	Linear
1	Minimum

Group Delay and Step Response (continued)

9.15.3 HPF Stage

The last stage of the ADS1282 filter block is a first-order HPF implemented as an IIR structure. This filter stage blocks dc signals and rolls off low-frequency components below the cut-off frequency. The transfer function for the filter is shown in Equation 14 of the Appendix.

The high-pass corner frequency is programmed by registers HPF[1:0], in hexadecimal. Equation 9 is used to set the high-pass corner frequency. Table 9 lists example values for the high-pass filter.

$$HPF[1:0] = 65{,}536 \left[1 - \sqrt{1 - 2\,\frac{\cos \omega_N + \sin \omega_N - 1}{\cos \omega_N}} \right] \tag{9}$$

Where:

HPF = High-pass filter register value (converted to hexadecimal)

$\omega_N = 2\pi f_{HP}/f_{DATA}$ (normalized frequency, radians)

f_{HP} = High-pass corner frequency (Hz)

f_{DATA} = Data rate (Hz)

Table 9. High-Pass Filter Value Examples

f_{HP} (Hz)	DATA RATE (SPS)	HPF[1:0]
0.5	250	0337h
1.0	500	0337h
1.0	1000	019Ah

Copyright © 2007–2015, Texas Instruments Incorporated

Group Delay and Step Response (continued)

The HPF causes a small gain error, in which case the magnitude of the error depends on the ratio of f_{HP}/f_{DATA}. For many common values of (f_{HP}/f_{DATA}), the gain error is negligible. Figure 45 shows the gain error of the HPF. The gain error factor is illustrated in Equation 13 (see the *Appendix* at the end of this document).

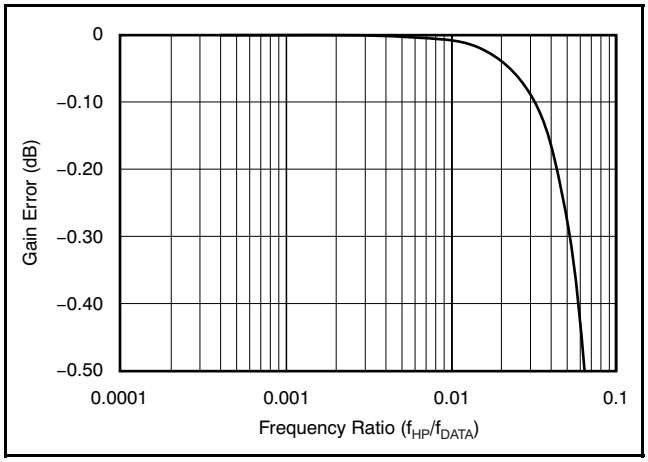

Figure 45. HPF Gain Error

Figure 46 shows the first-order amplitude and phase response of the HPF. Note that in the case of applying step inputs or synchronizing, the settling time of the filter should be taken into account.

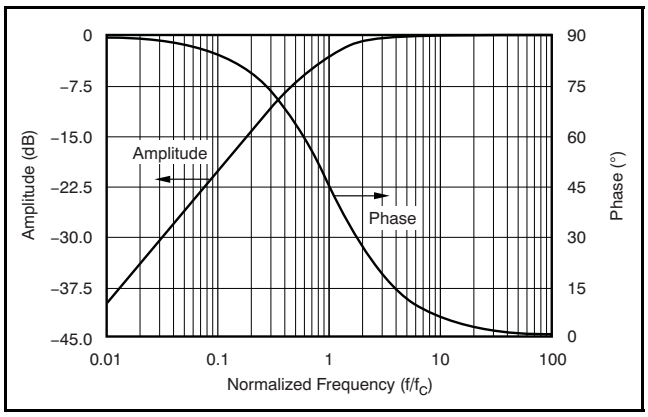

Figure 46. HPF Amplitude and Phase Response

9.16 Master Clock Input (CLK)

The ADS1282 requires a clock input for operation. The clock is applied to the CLK pin. The data conversion rate scales directly with the CLK frequency. Power consumption versus CLK frequency is relatively constant (see the *Typical Characteristics*).

As with any high-speed data converter, a high-quality, low-jitter clock is essential for optimum performance. Crystal clock oscillators are the recommended clock source. Make sure to avoid excess ringing on the clock input; keep the clock trace as short as possible and use a 50Ω series resistor close to the source.

9.17 Synchronization (Sync Pin and Sync Command)

The ADS1282 can be synchronized to an external event, as well as synchronized to other ADS1282 devices if the sync event is applied simultaneously.

The ADS1282 has two sources for synchronization: the SYNC input pin and the SYNC command. The ADS1282 also has two synchronizing modes: Pulse-sync and Continuous-sync. In Pulse-sync mode, the ADS1282 synchronizes to a single sync event. In Continuous-sync mode, either a single SYNC event is used to synchronize conversions or a continuous clock is applied to the pin with a period equal to integer multiples of the data rate. When the periods of the sync input and the $\overline{DRDY}$ output do not match, the ADS1282 re-synchronizes and conversions are restarted.

Copyright © 2007–2015, Texas Instruments Incorporated

9.18 Pulse-Sync Mode

In Pulse-sync mode, the ADS1282 stops and restarts the conversion process when a sync event occurs (by pin or command). When the sync event occurs, the device resets the internal memory; $\overline{\text{DRDY}}$ goes high (pulse SYNC mode) otherwise in Continuous SYNC mode, $\overline{\text{DRDY}}$ continues to toggle, and after the digital filter has settled, new conversion data are available, as shown in Figure 47 and Table 10.

Note that resynchronization occurs on the next rising CLK edge after the rising edge of the SYNC pin or after the eighth rising SCLK edge for opcode SYNC commands. To be effective, the SYNC opcode should be broadcast to all devices simultaneously.

9.19 Continuous-Sync Mode

In Continuous-sync mode, either a single sync pulse or a continuous clock may be applied. When a single sync pulse is applied (rising edge), the device behaves similar to the Pulse-sync mode. However, in this mode, $\overline{\text{DRDY}}$ continues to toggle unaffected but the DOUT output is held low until data are ready, 63 $\overline{\text{DRDY}}$ periods later. When the conversion data are non-zero, new conversion data are ready (as shown in Figure 47).

When a continuous clock is applied to the SYNC pin, the period must be an integral multiple of the output data rate or the device re-synchronizes. Note that synchronization results in the restarting of the digital filter and an interruption of 63 readings (refer to Table 10).

When the sync input is first applied, the device re-synchronizes (under the condition $t_{SYNC} \neq N/f_{DATA}$). $\overline{\text{DRDY}}$ continues to output but DOUT is held low until the new data are ready. Then, if SYNC is applied again and the period matches an integral multiple of the output data rate, the device freely runs without re-synchronization. Note that the phase of the applied clock and output data rate ($\overline{\text{DRDY}}$) are not matched because of the initial delay of $\overline{\text{DRDY}}$ after SYNC is first applied. Figure 48 shows the timing for Continuous-Sync mode.

Continuous-Sync Mode (continued)

Note that a SYNC clock input should be applied after the Continuous-Sync mode is set. The first rising edge of SYNC then causes a synchronization.

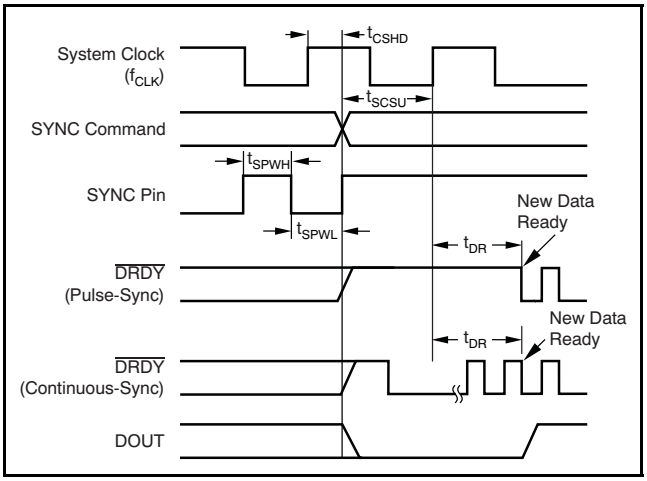

Figure 47. Pulse-Sync Timing, Continuous-Sync Timing with Single Sync

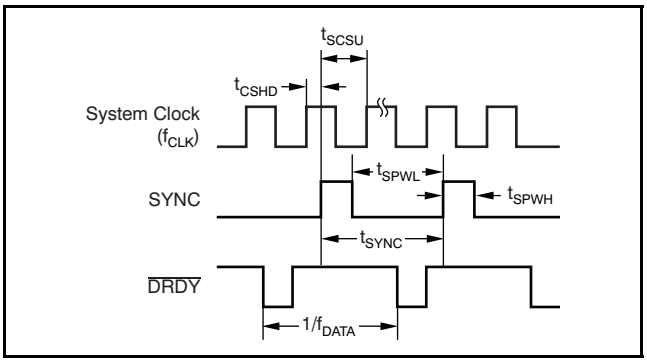

Figure 48. Continuous-Sync Timing with Sync Clock

Table 10. Pulse-Sync Timing for Figure 47 and Figure 48

PARAMETER	DESCRIPTION	MIN	MAX	UNITS
t_{SYNC}	SYNC period(1)	1	Infinite	n/f_{DATA}
t_{CSHD}	CLK to SYNC hold time to not latch on CLK edge	10		ns
t_{SCSU}	SYNC to CLK setup time to latch on CLK edge	10		ns
$t_{SPWH, L}$	SYNC pulse width, high or low	2		$1/f_{CLK}$
t_{DR}	Time for data ready (SINC filter)	See Appendix, Table 35		
	Time for data ready (FIR filter)	$62.98046875/f_{DATA} + 468/f_{CLK}$		

(1) Continuous-Sync mode; a free-running SYNC clock input without causing re-synchronization.

Copyright © 2007–2015, Texas Instruments Incorporated

9.20 Reset ($\overline{\text{RESET}}$ Pin and Reset Command)

The ADS1282 may be reset in two ways: toggle the $\overline{\text{RESET}}$ pin low or send a Reset command. When using the $\overline{\text{RESET}}$ pin, take it low and hold for at least $2/f_{CLK}$ to force a reset. The ADS1282 is held in reset until the pin is released. By command, RESET takes effect on the next rising edge of f_{CLK} after the eighth rising edge of SCLK of the command. Note that in order to ensure the Reset command can function, the SPI interface may require resetting itself; see the *Serial Interface* section.

In reset, registers are set to default and the conversions are synchronized on the next rising edge of CLK. New conversion data are available, as shown in Figure 49 and Table 11.

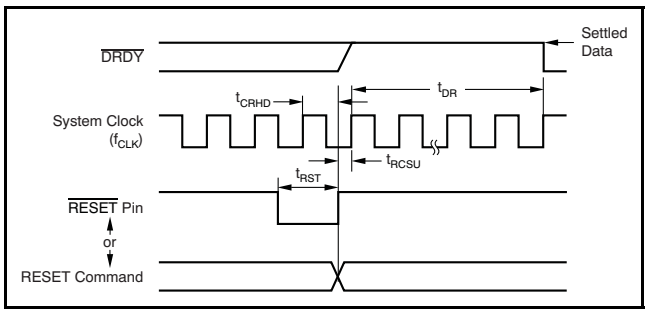

Figure 49. Reset Timing

Table 11. Reset Timing for Figure 49

PARAMETER	DESCRIPTION	MIN	UNITS
t_{CRHD}	CLK to RESET hold time	10	ns
t_{RCSU}	RESET to CLK setup time	10	ns
t_{RST}	RESET low	2	$1/f_{CLK}$
t_{DR}	Time for data ready	$62.98046875/f_{DATA} + 468/f_{CLK}$	

9.21 Power-Down ($\overline{\text{PWDN}}$ Pin and Standby Command)

There are two ways to power-down the ADS1282: take the $\overline{\text{PWDN}}$ pin low or send a Standby command. When the $\overline{\text{PWDN}}$ pin is pulled low, the internal circuitry is disabled to minimize power and the contents of the register settings are reset.

Power-Down ($\overline{\text{PWDN}}$ Pin and Standby Command) (continued)

In power-down, note that the device outputs remain active and the device inputs must not float. When the Standby command is sent, the SPI port and the configuration registers are kept active. Figure 50 and Table 12 show the timing.

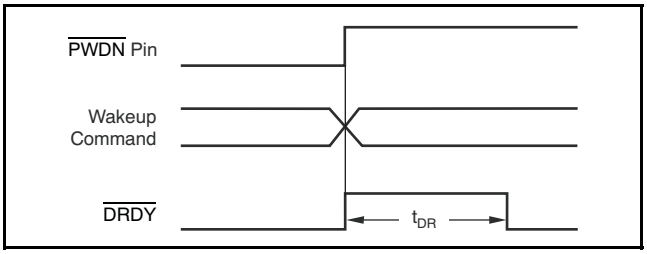

Figure 50. $\overline{\text{PWDN}}$ Pin and Wake-Up Command Timing (Table 12 Shows t_{DR})

9.22 Power-On Sequence

The ADS1282 has three power supplies: AVDD, AVSS, and DVDD. Figure 51 shows the power-on sequence of the ADS1282. The power supplies can be sequenced in any order. The supplies [the difference of (AVDD – AVSS) and DVDD] generate an internal reset whose outputs are summed to generate a global internal reset. After the supplies have crossed the minimum thresholds, 2^{16} f_{CLK} cycles are counted before releasing the internal reset. After the internal reset is released, new conversion data are available, as shown in Figure 51 and Table 12.

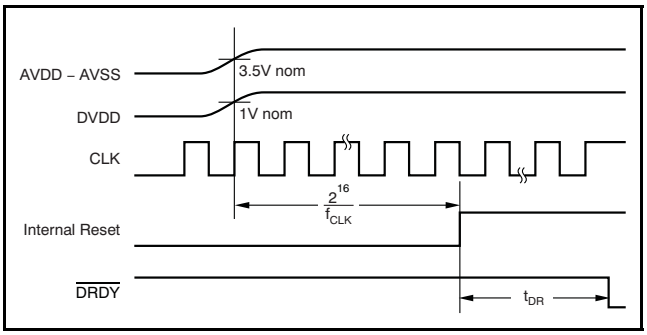

Figure 51. Power-On Sequence

Table 12. Power-On, $\overline{\text{PWDN}}$ Pin, and Wake-Up Command Timing for New Data

PARAMETER	DESCRIPTION		FILTER MODE
t_{DR}	Time for data ready 2^{16} CLK cycles after power-on; and new data ready after $\overline{\text{PWDN}}$ pin or Wake-Up command	See Appendix, Table 35	SINC (1)
		$62.98046875/f_{DATA} + 468/f_{CLK}$ (2)	FIR

(1) Supply power-on and $\overline{\text{PWDN}}$ pin default is 1000SPS FIR.
(2) Subtract two CLK cycles for the Wake-Up command. The Wake-Up command is timed from the next rising edge of CLK to after the eighth rising edge of SCLK during command to $\overline{\text{DRDY}}$ falling.

Copyright © 2007–2015, Texas Instruments Incorporated

9.23 DVDD Power Supply

The DVDD supply operates over the range of +1.65V to +3.6V. If DVDD is operated at less than 2.25V, connect the DVDD pin to the BYPAS pin. If DVDD is greater than or equal to 2.25V, do not connect DVDD to the BYPAS pin. Figure 52 shows this connection.

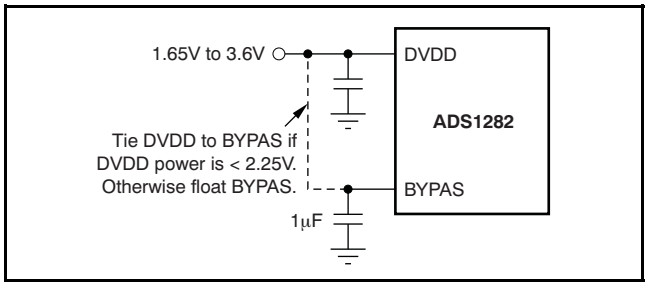

Figure 52. DVDD Power

9.24 Serial Interface

A serial interface is used to read the conversion data and access the configuration registers. The interface consists of three basic signals: SCLK, DIN, and DOUT. An additional output, $\overline{\text{DRDY}}$, transitions low in Read Data Continuous mode when data are ready for retrieval. Figure 53 shows the connection when multiple converters are used.

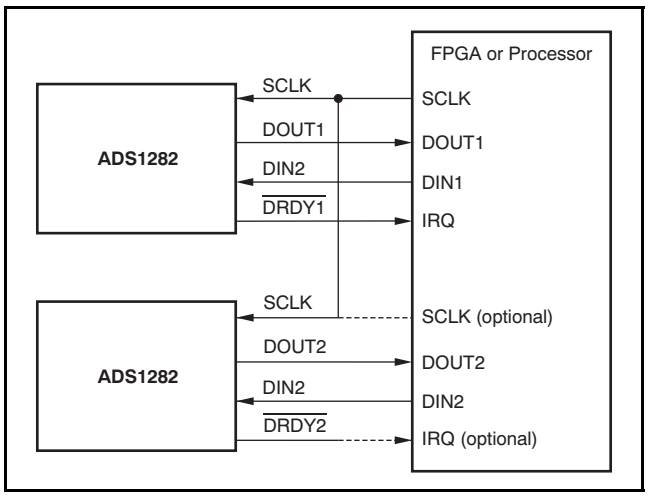

Figure 53. Interface for Multiple Devices

Serial Interface (continued)

9.24.1 Serial Clock (SCLK)

The serial clock (SCLK) is an input that is used to clock data into (DIN) and out of (DOUT) the ADS1282. This input is a Schmitt-trigger input that has a high degree of noise immunity. However, it is recommended to keep SCLK as clean as possible to prevent possible glitches from inadvertently shifting the data.

Data are shifted into DIN on the rising edge of SCLK and data are shifted out of DOUT on the falling edge of SCLK. If SCLK is held low for 64 $\overline{\text{DRDY}}$ cycles, data transfer or commands in progress terminate and the SPI interface resets. The next SCLK pulse starts a new communication cycle. This timeout feature can be used to recover the interface when a transmission is interrupted or SCLK inadvertently glitches. SCLK should remain low when not active.

9.24.2 Data Input (DIN)

The data input pin (DIN) is used to input register data and commands to the ADS1282. Keep DIN low when reading conversion data in the Read Data Continuous mode (except when issuing a STOP Read Data Continuous command). Data on DIN are shifted into the converter on the rising edge of SCLK.

9.24.3 Data Output (DOUT)

The data output pin (DOUT) is used to output data from the ADS1282. Data are shifted out on DOUT on the falling edge of SCLK.

Copyright © 2007–2015, Texas Instruments Incorporated

Serial Interface (continued)

9.24.4 Data Ready ($\overline{\text{DRDY}}$)

$\overline{\text{DRDY}}$ is an output; when it transitions low, this transition indicates new conversion data are ready, as shown in Figure 54. When reading data by the continuous mode, the data must be read within four CLK periods before $\overline{\text{DRDY}}$ goes low again or the data are overwritten with new conversion data. When reading data by the command mode, the read operation can overlap the occurrence of the next $\overline{\text{DRDY}}$ without data corruption.

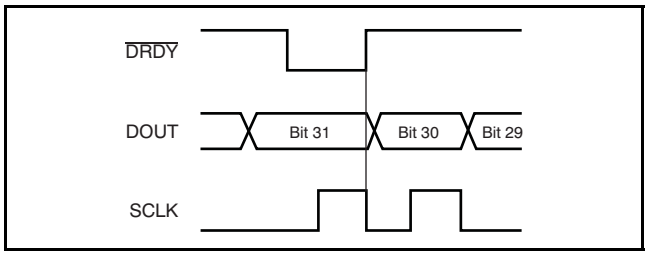

Figure 54. $\overline{\text{DRDY}}$ with Data Retrieval

$\overline{\text{DRDY}}$ resets high on the first falling edge of SCLK. Figure 54 and Figure 55 show the function of $\overline{\text{DRDY}}$ with and without data readback, respectively.

If data are not retrieved (no SCLK provided), $\overline{\text{DRDY}}$ pulses high for four f_{CLK} periods during the update time, as shown in Figure 55.

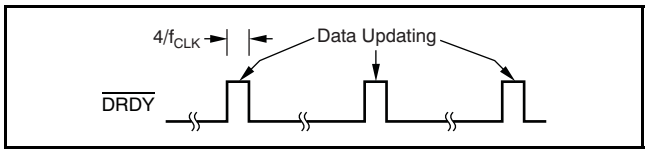

Figure 55. $\overline{\text{DRDY}}$ with No Data Retrieval

9.25 Data Format

The ADS1282 provides 32 bits of conversion data in binary twos complement format, as shown in Table 13. The LSB of the data is a redundant sign bit: '0' for positive numbers and '1' for negative numbers. However, when the output is clipped to +FS, the LSB = 1; when the output is clipped to –FS, the LSB = 0. If desired, the data readback may be stopped at 24 bits. Note that in sinc filter mode, the output data are scaled by 1/2.

Table 13. Ideal Output Code Versus Input Signal

INPUT SIGNAL V_{IN} (AINP – AINN)	32-BIT IDEAL OUTPUT CODE(1)	
	FIR FILTER	SINC FILTER(2)
$> \frac{V_{REF}}{2 \times PGA}$	7FFFFFFFh	(3)
$\frac{V_{REF}}{2 \times PGA}$	7FFFFFFEh	3FFFFFFFh
$\frac{V_{REF}}{2PGA \times (2^{30} - 1)}$	00000002h	00000001h
0	00000000h	00000000h
$\frac{-V_{REF}}{2PGA \times (2^{30} - 1)}$	FFFFFFFFh	FFFFFFFFh
$\frac{-V_{REF}}{2PGA} \times \frac{2^{30}}{2^{30} - 1}$	80000001h	C0000000h
$< \frac{-V_{REF}}{2PGA} \times \frac{2^{30}}{2^{30} - 1}$	80000000h	(3)

(1) Excludes effects of noise, linearity, offset, and gain errors.
(2) Due to the reduction in oversampling ratio (OSR) related to the sinc filter high data rates, full resolution may not be available.
(3) In sinc filter mode, the output does not clip at half-scale code when the full-scale range is exceeded.

Copyright © 2007–2015, Texas Instruments Incorporated

9.26 Reading Data

The ADS1282 has two ways to read conversion data: Read Data Continuous and Read Data By Command.

9.26.1 Read Data Continuous

In the Read Data Continuous mode, the conversion data are shifted out directly from the device without the need for sending a read command. This mode is the default mode at power-on. This mode is also enabled by the RDATAC command. When $\overline{\text{DRDY}}$ goes low, indicating that new data are available, the MSB of data appears on DOUT, as shown in Figure 56. The data are normally read on the rising edge of SCLK, at the occurrence of the first falling edge of SCLK, $\overline{\text{DRDY}}$ returns high. After 32 bits of data have been shifted out, further SCLK transitions cause DOUT to go low. If desired, the read operation may be stopped at 24 bits. The data shift operation must be completed within four CLK periods before $\overline{\text{DRDY}}$ falls again or the data may be corrupted.

Reading Data (continued)

When a Stop Read Data Continuous command is issued, the $\overline{\text{DRDY}}$ output is blocked but the ADS1282 continues conversions. In stop continuous mode, the data can only be read by command.

9.26.2 Read Data by Command

The Read Data Continuous mode is stopped by the SDATAC command. In this mode, conversion data are read by command. In the Read Data By Command mode, a read data command must be sent to the device for each data conversion (as shown in Figure 57). When the read data command is received (on the eighth SCLK rising edge), data are available to read only when $\overline{\text{DRDY}}$ goes low (t_{DR}). When $\overline{\text{DRDY}}$ goes low, conversion data appear on DOUT. The data may be read on the rising edge of SCLK.

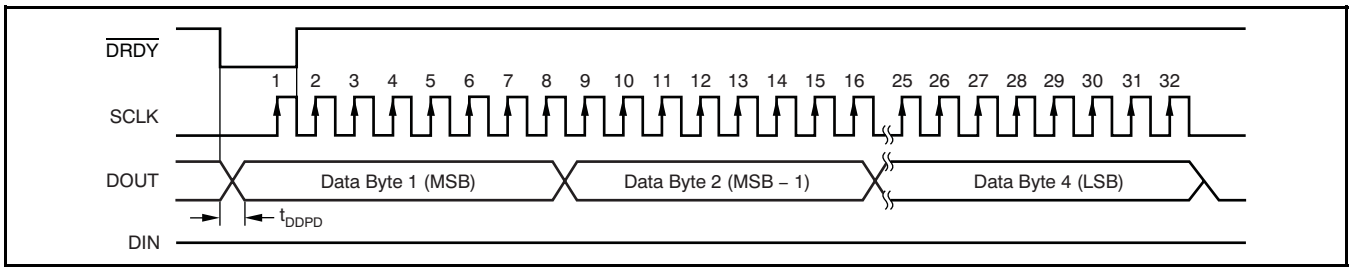

Figure 56. Read Data Continuous

Table 14. Timing Data for Figure 56

PARAMETER	DESCRIPTION	MIN	TYP	MAX	UNITS
t_{DDPD}	$\overline{\text{DRDY}}$ to valid MSB on DOUT propagation delay (1)			100	ns

(1) Load on DOUT = 20pF || 100kΩ.

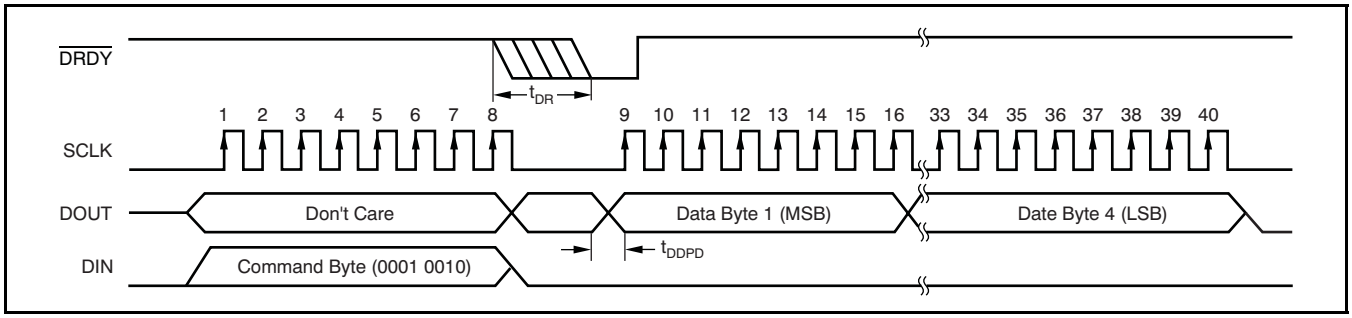

Figure 57. Read Data by Command, RDATA (t_{DDPD} Timing is Given in Table 14)

Table 15. Read Data Timing for Figure 57

PARAMETER	DESCRIPTION	MIN	TYP	MAX	UNITS
t_{DR}	Time for new data after data read command	0		1	f_{DATA}

9.27 One-Shot Operation

The ADS1282 can perform very power-efficient, one-shot conversions using the STANDBY command while under software control. Figure 58 shows this sequence. First, issue the STANDBY command to set the Standby mode.

When ready to make a measurement, issue the WAKEUP command. Monitor $\overline{\text{DRDY}}$; when it goes low, the fully settled conversion data are ready and may be read directly in Read Data Continuous mode. Afterwards, issue another STANDBY command. When ready for the next measurement, repeat the cycle starting with another WAKEUP command.

9.28 Offset and Full-Scale Calibration Registers

The conversion data can be scaled for offset and gain before yielding the final output code. As shown in Figure 59, the output of the digital filter is first subtracted by the offset register (OFC) and then multiplied by the full-scale register (FSC). Equation 10 shows the scaling:

$$\text{Final Output Data} = (\text{Input} - \text{OFC}[2:0]) \times \frac{\text{FSC}[2:0]}{400000\text{h}} \quad (10)$$

The values of the offset and full-scale registers are set by writing to them directly, or they are set automatically by calibration commands.

Note that the offset and full-scale calibrations apply to specific PGA settings. When the PGA is changed, these registers generally require recalculation. Calibration is bypassed in the sinc filter mode.

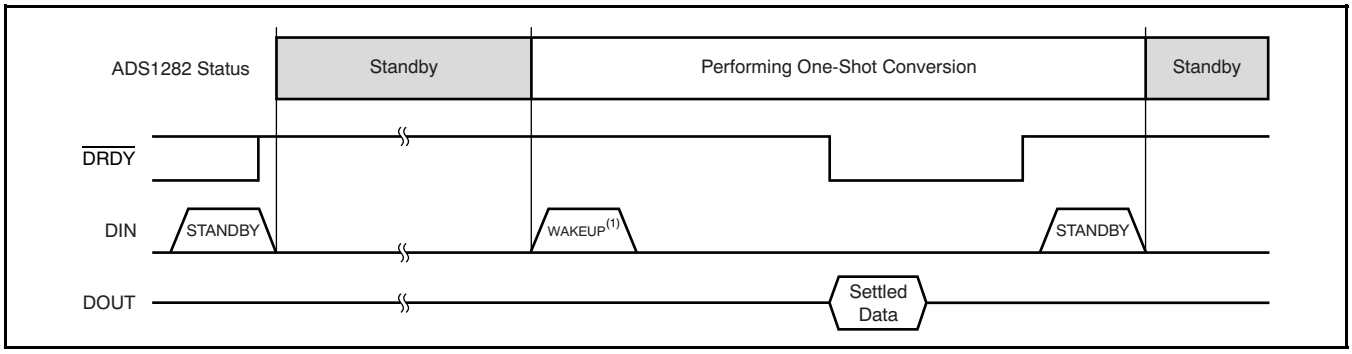

(1) See Figure 50 and Table 12 for time to new data.

Figure 58. One-Shot Conversions Using the Standby Command

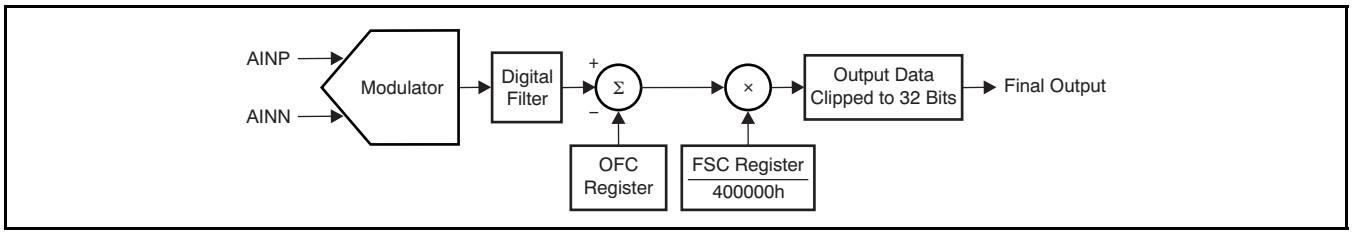

Figure 59. Calibration Block Diagram

Copyright © 2007–2015, Texas Instruments Incorporated

9.28.1 Ofc[2:0] Registers

The offset calibration is a 24-bit word, composed of three 8-bit registers, as shown in Table 18. The offset register is left-justified to align with the 32-bits of conversion data. The offset is in twos complement format with a maximum positive value of 7FFFFFh and a maximum negative value of 800000h. This value is subtracted from the conversion data. A register value of 00000h has no offset correction (default value). Note that while the offset calibration register value can correct offsets ranging from –FS to +FS (as shown in Table 16), to avoid input overload, the analog inputs cannot exceed the full-scale range.

Table 16. Offset Calibration Values

OFC REGISTER	FINAL OUTPUT CODE(1)
7FFFFFh	80000000h
000001h	FFFFFF00h
000000h	00000000h
FFFFFFh	00000100h
800000h	7FFFFF00h

(1) Full 32-bit final output code with zero code input.

9.28.2 FSC[2:0] Registers

The full-scale calibration is a 24-bit word, composed of three 8-bit registers, as shown in Table 19. The full-scale calibration value is 24-bit, straight offset binary, normalized to 1.0 at code 400000h. Table 17 summarizes the scaling of the full-scale register. A register value of 400000h (default value) has no gain correction (gain = 1). Note that while the full-scale calibration register value corrects gain errors above 1 (gain correction < 1), the full-scale range of the analog inputs should not exceed 103% to avoid input overload.

Table 17. Full-Scale Calibration Register Values

FSC REGISTER	GAIN CORRECTION
800000h	2.0
400000h	1.0
200000h	0.5
000000h	0

Table 18. Offset Calibration Word

REGISTER	BYTE	BIT ORDER							
OFC0	LSB	B7	B6	B5	B4	B3	B2	B1	B0 (LSB)
OFC1	MID	B15	B14	B13	B12	B11	B10	B9	B8
OFC2	MSB	B23 (MSB)	B22	B21	B20	B19	B18	B17	B16

Table 19. Full-Scale Calibration Word

REGISTER	BYTE	BIT ORDER							
FSC0	LSB	B7	B6	B5	B4	B3	B2	B1	B0 (LSB)
FSC1	MID	B15	B14	B13	B12	B11	B10	B9	B8
FSC2	MSB	B23 (MSB)	B22	B21	B20	B19	B18	B17	B16

Copyright © 2007–2015, Texas Instruments Incorporated

9.29 Calibration Commands

Calibration commands may be sent to the ADS1282 to calibrate the conversion data. The values of the offset and gain calibration registers are internally written to perform calibration. The appropriate input signals must be applied to the ADS1282 inputs before sending the commands. Use slower data rates to achieve more consistent calibration results; this effect is a byproduct of the lower noise that these data rates provide. Also, if calibrating at power-on, be sure the reference voltage is fully settled.

Figure 60 shows the calibration command sequence. After the analog input voltage (and reference) have stabilized, send the Stop Data Continuous command followed by the SYNC and Read Data Continuous commands. 64 data periods later, $\overline{\text{DRDY}}$ goes low. After $\overline{\text{DRDY}}$ goes low, send the Stop Data Continuous, then the Calibrate command followed by the Read Data Continuous command. After 16 data periods, calibration is complete and conversion data may be read at this time. The SYNC input must remain high during the calibration sequence.

Note that the calibration commands apply to specific PGA settings. If the PGA is changed, recalibration is necessary. Calibration is bypassed in the sinc filter mode.

Calibration Commands (continued)

9.29.1 OFSCAL Command

The OFSCAL command performs an offset calibration. Before sending the offset calibration command sequence (Figure 60), a *zero* input signal must be applied to the ADS1282 and the inputs allowed to stabilize. When the command sequence (Figure 60) is sent, the ADS1282 averages 16 readings and then writes this value to the OFC register. The contents of the OFC register may be subsequently read or written. During offset calibration, the full-scale correction is bypassed.

9.29.2 GANCAL Command

The GANCAL command performs a gain calibration. Before sending the GANCAL command sequence (Figure 60), a dc input must be applied (typically full-scale input, but not to exceed 103% full-scale). After the signal has stabilized, the command sequence can be sent. The ADS1282 averages 16 readings, then computes a gain value that makes the applied input the new full-scale. The gain value is written to the FSC register, whose contents may be subsequently read or written.

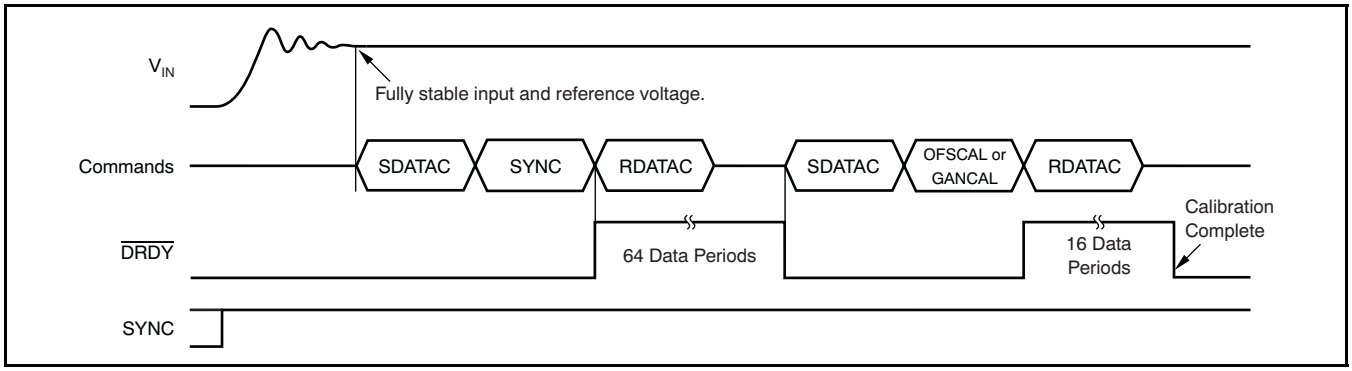

Figure 60. Offset and Gain Calibration Timing

Copyright © 2007–2015, Texas Instruments Incorporated

9.30 User Calibration

System calibration of the ADS1282 can be performed without using the calibration commands. This procedure requires the calibration values to be externally calculated and then written to the calibration registers. The steps for this procedure are:

1. Set the OFSCAL[2:0] register = 0h and GANCAL[2:0] = 400000h. These values set the offset and gain registers to 0 and 1, respectively.
2. Apply a *zero* differential input to the input of the system. Wait for the system to settle and then average *n* output readings. Higher numbers of averaged readings result in more consistent calibration. Write the averaged value to the OFC register.
3. Apply a differential dc signal, or an ac signal (typically full-scale, but not to exceed 103% full-scale). Wait for the system to settle and then average the *n* output readings.

User Calibration (continued)

The value written to the FSC registers is calculated by Equation 11.

DC signal calibration is shown in Equation 11. The expected output code is based on 31-bit output data.

$$FSC[2:0] = 400000h \times \left(\frac{\text{Expected Output Code}}{\text{Actual Output Code}} \right) \quad (11)$$

For ac signal calibration, use an RMS value of collected data (as shown in Equation 12).

$$FSC[2:0] = 400000h \times \frac{\text{Expected RMS Value}}{\text{Actual RMS Value}} \quad (12)$$

10 Commands

The commands listed in Table 20 control the operation of the ADS1282. Most commands are stand-alone (that is, 1 byte in length); the register reads and writes require a second command byte in addition to the actual data bytes.

A delay of 24 f_{CLK} cycles between commands and between bytes within a command is required, starting from the last SCLK rising edge of one command to the first SCLK rising edge of the following command. This delay is shown in Figure 61.

In Read Data Continuous mode, the ADS1282 places conversion data on the DOUT pin as SCLK is applied. As a consequence of the potential conflict of conversion data on DOUT and data placed on DOUT resulting from a register or Read Data By Command operation, it is necessary to send a STOP Read Data Continuous command before Register or Data Read By Command. The STOP Read Data Continuous command disables the direct output of conversion data on the DOUT pin.

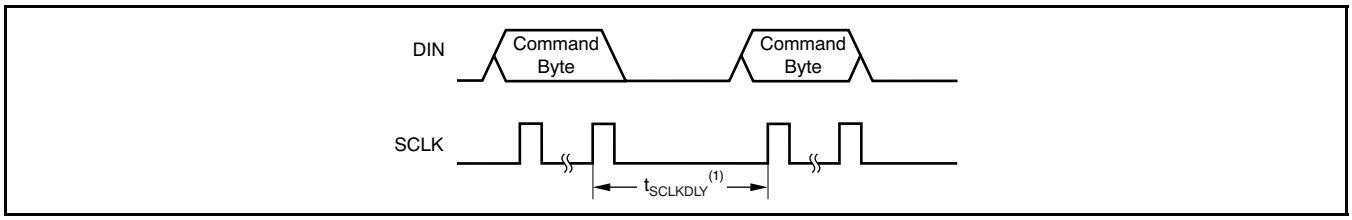

(1) $t_{SCLKDLY} = 24/f_{CLK}$ (min).

Figure 61. Consecutive Commands

Table 20. Command Descriptions

COMMAND	TYPE	DESCRIPTION	1st COMMAND BYTE (1) (2)	2nd COMMAND BYTE (3)
WAKEUP	Control	Wake-up from Standby mode	0000 000X (00h or 01h)	
STANDBY	Control	Enter Standby mode	0000 001X (02h or 03h)	
SYNC	Control	Synchronize the A/D conversion	0000 010X (04h or 5h)	
$\overline{\text{RESET}}$	Control	Reset registers to default values	0000 011X (06h or 07h)	
RDATAC	Control	Read data continuous	0001 0000 (10h)	
SDATAC	Control	Stop read data continuous	0001 0001 (11h)	
RDATA	Data	Read data by command (4)	0001 0010 (12h)	
RREG	Register	Read *nnnnn* register(s) at address *rrrrr* (4)	001*r rrrr* (20h + 000*r rrrr*)	000*n nnnn* (00h + *n nnnn*)
WREG	Register	Write *nnnnn* register(s) at address *rrrrr*	010*r rrrr* (40h + 000*r rrrr*)	000*n nnnn* (00h + *n nnnn*)
OFSCAL	Calibration	Offset calibration	0110 0000 (60h)	
GANCAL	Calibration	Gain calibration	0110 0001 (61h)	

(1) X = don't care.
(2) rrrrr = starting address for register read and write commands.
(3) nnnnn = number of registers to be read/written – 1. For example, to read/write three registers, set *nnnnn* = 2 (00010).
(4) Required to cancel Read Data Continuous mode before sending a command.

Copyright © 2007–2015, Texas Instruments Incorporated

WAKEUP: Wake-Up from Standby Mode

Description: This command is used to exit the standby mode. Upon sending the command, the time for the first data to be ready is illustrated in Figure 50 and Table 13. Sending this command during normal operation has no effect; for example, reading data by the Read Data Continuous method with DIN held low.

STANDBY: Standby Mode

Description: This command places the ADS1282 into Standby mode. In Standby, the device enters a reduced power state where a low quiescent current remains to keep the register settings and SPI interface active. For complete device shutdown, take the $\overline{\text{PWDN}}$ pin low (register settings are not saved). To exit Standby mode, issue the WAKEUP command. The operation of Standby mode is shown in Figure 62.

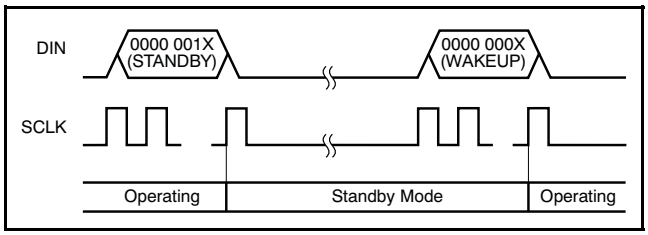

Figure 62. Standby Command Sequence

SYNC: Synchronize the A/D Conversion

Description: This command synchronizes the analog-to-digital (A/D) conversion. Upon receipt of the command, the reading in progress is cancelled and the conversion process is re-started. In order to synchronize multiple ADS1282s, the command must be sent simultaneously to all devices. Note that the SYNC pin must be high for this command.

RESET: Reset the Device

Description: The RESET command resets the registers to default values, enables the Read Data Continuous mode, and restarts the conversion process; the $\overline{\text{RESET}}$ command is functionally the same as the $\overline{\text{RESET}}$ pin. See Figure 49 for the RESET command timing.

RDATAC: Read Data Continuous

Description: This command enables the Read Data Continuous mode (default mode). In this mode, conversion data can be read from the device directly without the need to supply a data read command. Each time $\overline{\text{DRDY}}$ falls low, new data are available to read. See the *Read Data Continuous* section for more details.

SDATAC: Stop Read Data Continuous

Description: This command stops the Read Data Continuous mode. Exiting the Read Data Continuous mode is required before sending Register and Data read commands. This command suppresses the $\overline{\text{DRDY}}$ output, but the ADS1282 continues conversions.

RDATA: Read Data by Command

Description: This command reads the conversion data. See the *Read Data By Command* section for more details.

RREG: Read Register Data

Description: This command is used to read single or multiple register data. The command consists of a two-byte op-code argument followed by the output of register data. The first byte of the op-code includes the starting address, and the second byte specifies the number of registers to read – 1.

First command byte: 001r rrrr, where *rrrrr* is the starting address of the first register.

Second command byte: 000n nnnn, where *nnnnn* is the number of registers – 1 to read.

Starting with the 16th falling edge of SCLK, the register data appear on DOUT.

The RREG command is illustrated in Figure 63. Note that a delay of 24 f_{CLK} cycles is required between each byte transaction.

WREG: Write to Register

Description: This command writes single or multiple register data. The command consists of a two-byte op-code argument followed by the input of register data. The first byte of the op-code contains the starting address and the second byte specifies the number of registers to write – 1.

First command byte: 001r rrrr, where *rrrrr* is the starting address of the first register.

Second command byte: 000n nnnn, where *nnnnn* is the number of registers – 1 to write.

Data byte(s): one or more register data bytes, depending on the number of registers specified.

Figure 64 illustrates the WREG command.

Note that a delay of 24 f_{CLK} cycles is required between each byte transaction.

Copyright © 2007–2015, Texas Instruments Incorporated

OFSCAL: Offset Calibration

Description: This command performs an offset calibration. The inputs to the converter (or the inputs to the external pre-amplifier) should be zeroed and allowed to stabilize before sending this command. The offset calibration register updates after this operation. See the *Calibration Commands* section for more details.

GANCAL: Gain Calibration

Description: This command performs a gain calibration. The inputs to the converter should have a stable dc input (typically full-scale, but not to exceed 103% full-scale). The gain calibration register updates after this operation. See the *Calibration Commands* section for more details.

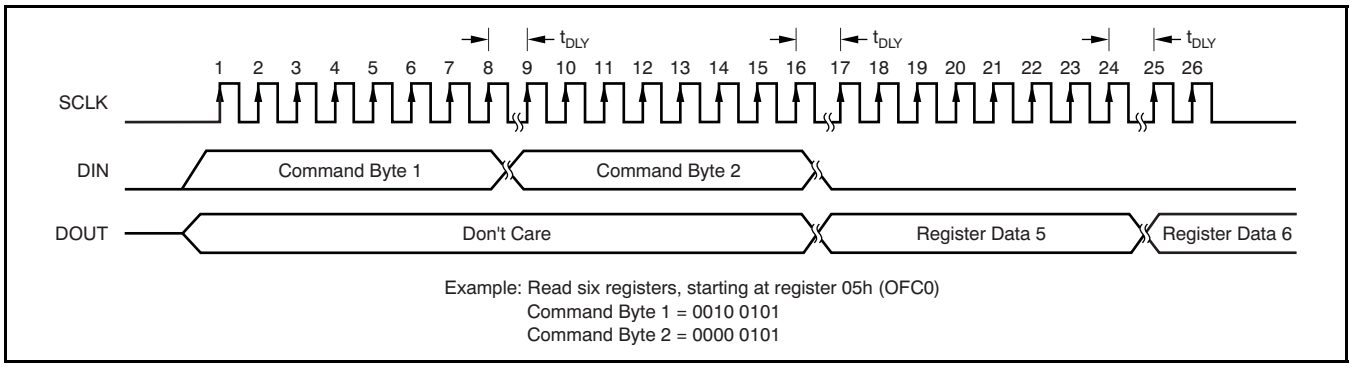

Figure 63. Read Register Data (Table 21 Shows t_{DLY})

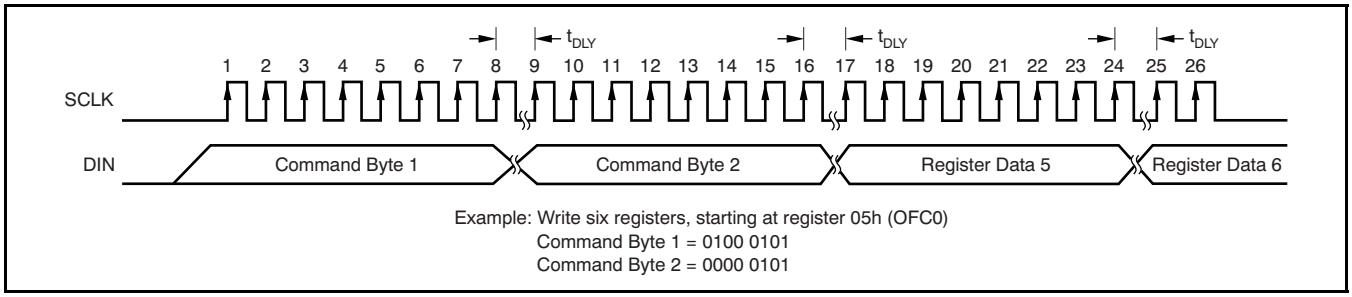

Figure 64. Write Register Data (Table 21 Shows t_{DLY})

Table 21. t_{DRY} Value

PARAMETER	MIN
t_{DLY}	$24/f_{CLK}$

Copyright © 2007–2015, Texas Instruments Incorporated

11 Register Map

Collectively, the registers contain all the information needed to configure the part, such as data rate, filter selection, calibration, etc. The registers are accessed by the RREG and WREG commands. The registers can be accessed individually or as a block of registers by sending or receiving consecutive bytes. Note that after a register write operation the ADC resets, resulting in an interruption of 63 readings.

Table 22. Register Map

ADDRESS	REGISTER	RESET VALUE	BIT 7	BIT 6	BIT 5	BIT 4	BIT 3	BIT 2	BIT 1	BIT 0
00h	ID	X0h	ID3	ID2	ID1	ID0	0	0	0	0
01h	CONFIG0	52h	SYNC	1	DR2	DR1	DR0	PHS	FILTR1	FILTR0
02h	CONFIG1	08h	0	MUX2	MUX1	MUX0	CHOP	PGA2	PGA1	PGA0
03h	HPF0	32h	HPF07	HPF06	HPF05	HPF04	HPF03	HPF02	HPF01	HPF00
04h	HPF1	03h	HPF15	HPF14	HPF13	HPF12	HPF11	HPF10	HPF09	HPF08
05h	OFC0	00h	OFC07	OFC06	OFC05	OFC04	OFC03	OFC02	OFC01	OFC00
06h	OFC1	00h	OFC15	OFC14	OFC13	OFC12	OFC11	OFC10	OFC09	OFC08
07h	OFC2	00h	OFC23	OFC22	OFC21	OFC20	OFC19	OFC18	OFC17	OFC16
08h	FSC0	00h	FSC07	FSC06	FSC05	FSC04	FSC03	FSC02	FSC01	FSC00
09h	FSC1	00h	FSC15	FSC14	FSC13	FSC12	FSC11	FSC10	FSC09	FSC08
0Ah	FSC2	40h	FSC23	FSC22	FSC21	FSC20	FSC19	FSC18	FSC17	FSC16

Table 23. ID : ID Register (Address 00h)

7	6	5	4	3	2	1	0
ID3	ID2	ID1	ID0	0	0	0	0

Reset value = X0h.

Bit[7:4] **ID[3:0]**

Factory-programmed identification bits (read-only)

Bit[3:0] **Reserved**

Always write '0'

Table 24. CONFIG0 : Configuration Register 0 (Address 01h)

7	6	5	4	3	2	1	0
SYNC	1	DR2	DR1	DR0	PHASE	FILTR1	FILTR0

Reset value = 52h.

Bit[7] **SYNC**

Synchronization mode
0: Pulse SYNC mode (default)
1: Continuous SYNC mode

Bit[6] **Reserved**

Always write '1'

Bit[5:3] **Data Rate Select**

DR[2:0]

000: 250SPS
001: 500SPS
010: 1000SPS (default)
011: 2000SPS
100: 4000SPS

Bit[2] **FIR Phase Response**

PHASE

0: Linear phase (default)
1: Minimum phase

Bit[1:0] **Digital Filter Select**

FILTR[1:0]

Digital filter configuration
00: On-chip filter bypassed, modulator output mode
01: Sinc filter block only
10: Sinc + LPF filter blocks (default)
11: Sinc + LPF + HPF filter blocks

Copyright © 2007–2015, Texas Instruments Incorporated

Table 25. CONFIG1 : Configuration Register 1 (Address 02h)

7	6	5	4	3	2	1	0
0	MUX2	MUX1	MUX0	CHOP	PGA2	PGA1	PGA0

Reset value = 08h.

Bit[7] **Reserved**

Always write '0'

Bit[6:4] **MUX Select**

MUX[2:0]

000: AINP1 and AINN1 (default)
001: AINP2 and AINN2
010: Internal short via 400Ω
011:AINP1 and AINN1 connected to AINP2 and AINN2
100: External short to AINN2

Bit[3] **PGA Chopping Enable**

CHOP

0: PGA chopping disabled
1: PGA chopping enabled (default)

Bit[2:0] **PGA Gain Select**

PGA[2:0]

000: G = 1 (default)
001: G = 2
010: G = 4
011: G = 8
100: G = 16
101: G = 32
110: G = 64

HPF1 and HPF0

These two bytes (high-byte and low-byte, respectively) set the corner frequency of the high-pass filter.

Table 26. HPF0: High-Pass Filter Corner Frequency, Low Byte (Address 03h)

7	6	5	4	3	2	1	0
HP07	HP06	HP05	HP04	HP03	HP02	HP01	HP00

Reset value = 32h.

Table 27. HPF1: High-Pass Filter Corner Frequency, High Byte (Address 04h)

7	6	5	4	3	2	1	0
HP15	HP14	HP13	HP12	HP11	HP10	HP09	HP08

Reset value = 03h.

OFC2, OFC1, OFC0

These three bytes set the offset calibration value.

Table 28. OFC0: Offset Calibration, Low Byte (Address 05h)

7	6	5	4	3	2	1	0
OC07	OC06	OC05	OC04	OC03	OC02	OC01	OC00

Reset value = 00h.

Table 29. OFC1: Offset Calibration, Mid Byte (Address 06h)

7	6	5	4	3	2	1	0
OC15	OC14	OC13	OC12	OC11	OC10	OC09	OC08

Reset value = 00h.

Table 30. OFC2: Offset Calibration, High Byte (Address 07h)

7	6	5	4	3	2	1	0
OC23	OC22	OC21	OC20	OC19	OC18	OC17	OC16

Reset value = 00h.

FSC2, FSC1, FSC0

These three bytes set the full-scale calibration value.

Table 31. FSC0: Full-Scale Calibration, Low Byte (Address 08h)

7	6	5	4	3	2	1	0
FSC07	FSC06	FSC05	FSC04	FSC03	FSC02	FSC01	FSC00

Reset value = 00h.

Table 32. FSC1: Full-Scale Calibration, Mid Byte (Address 09h)

7	6	5	4	3	2	1	0
FSC15	FSC14	FSC13	FSC12	FSC11	FSC10	FSC09	FSC08

Reset value = 00h.

Table 33. FSC2: Full-Scale Calibration, High Byte (Address 0ah)

7	6	5	4	3	2	1	0
FSC23	FSC22	FSC21	FSC20	FSC19	FSC18	FSC17	FSC16

Reset value = 40h.

Copyright © 2007–2015, Texas Instruments Incorporated

12 Configuration Guide

After RESET or power-on, the registers can be configured using the following procedure:

1. **Reset the serial interface.** Before using the serial interface, it may be necessary to recover the serial interface (undefined I/O power-up sequencing may cause false SCLK detection). To reset the SPI interface, toggle the $\overline{\text{RESET}}$ pin or, when in Read Data Continuous mode, hold SCLK low for 64 $\overline{\text{DRDY}}$ periods.
2. **Configure the registers.** The registers are configured by either writing to them individually or as a group. Software may be configured in either mode. The SDATAC command must be sent before register read/write operations to cancel the Read Data Continuous mode.
3. **Verify register data.** The register may be read back for verification of device communications.
4. **Set the data mode.** After register configuration, the device may be configured for Read Data Continuous mode, either by the Read Data Continuous command or configured in Read Data By Register mode using SDATAC command.
5. **Synchronize readings.** Whenever SYNC is high, the ADS1282 freely runs the data conversions. To stop and re-sync the conversions, take SYNC low and then high.
6. **Read data.** If the Read Data Continuous mode is active, the data are read directly after $\overline{\text{DRDY}}$ falls by applying SCLK pulses. If the Read Data Continuous mode is inactive, the data can only be read by Read Data By Command. The Read Data opcode command must be sent in this mode to read each conversion result (note that $\overline{\text{DRDY}}$ only asserts after each read data command is sent).

Copyright © 2007–2015, Texas Instruments Incorporated

13 Application Information

The ADS1282 is a very high-resolution ADC. Optimal performance requires giving special attention to the support circuitry and printed circuit board (PCB) design. Locate noisy digital components, such as microcontrollers, oscillators, etc, in an area of the PCB away from the converter or front-end components. Locating the digital components close to the power-entry point keeps the digital current path short and separate from sensitive analog components.

A typical geophone front-end application is shown in Figure 65. The application shows the ADS1282 operation with dual ±2.5V analog supplies. The ADS1282 can also operate with a single +5V analog supply.

The geophone input signal is filtered both differentially, by components C_4 and R_1 to R_4 and filtered independently by components C_2, C_3 and R_1, R_2. The differential filter removes high-frequency normal mode components from the input signal. The independent filters remove high-frequency components that are common to both input signals leads (common-mode filter). The recommended input filters may not be required for all applications depending on the system requirements.

Resistors R_5 and R_6 bias the signals inputs to midsupply (ground), and also provide the bias current return path for the ADS1282 inputs. For single-supply operation, set the bias to a low impedance +2.5V (AVDD/2).

Optional diode clamps protect the ADS1282 inputs from voltage transients and overloads. The diodes provide input protection when possible high-level transients may exceed the internal ESD diode rating.

The REF02 +5V reference provides the reference to the ADS1282. The reference output is filtered by the optional R_7 and C_5 filter network. The filter requires several seconds to settle after power-on. Capacitor C_7 provides high-frequency bypassing of the reference inputs and should be placed close to the ADS1282 pins. Note that R_7 (1kΩ) results in a systematic gain error of 1.2%.

Alternatively, the REF5050 (5V) or REF5045 (4.5V) reference can be used. The REF5045 reference has the advantage of operating from the +5V power supply. The REF5050 requires +5.2V minimum power supply.

Optional components R_8, and R_9 provides a 20mV offset to the ADS1282. The internal 300Ω resistors form a voltage divider with the external resistors to provide the offset. The offset moves the low level idle tones out of the passband. Note that the offset is independent of the PGA setting. The offset resistors also result in a small additional gain error. To maintain good CMR performance, R_{10} and R_{11} should be matched to 0.1%, and the traces routed back directly to the reference.

Capacitor C_6 (10nF) filters the PGA output glitches caused by sampling of the modulator. The capacitor also forms a low-pass filter on the input signal with a cut-off frequency ≠25kHz.

Copyright © 2007–2015, Texas Instruments Incorporated

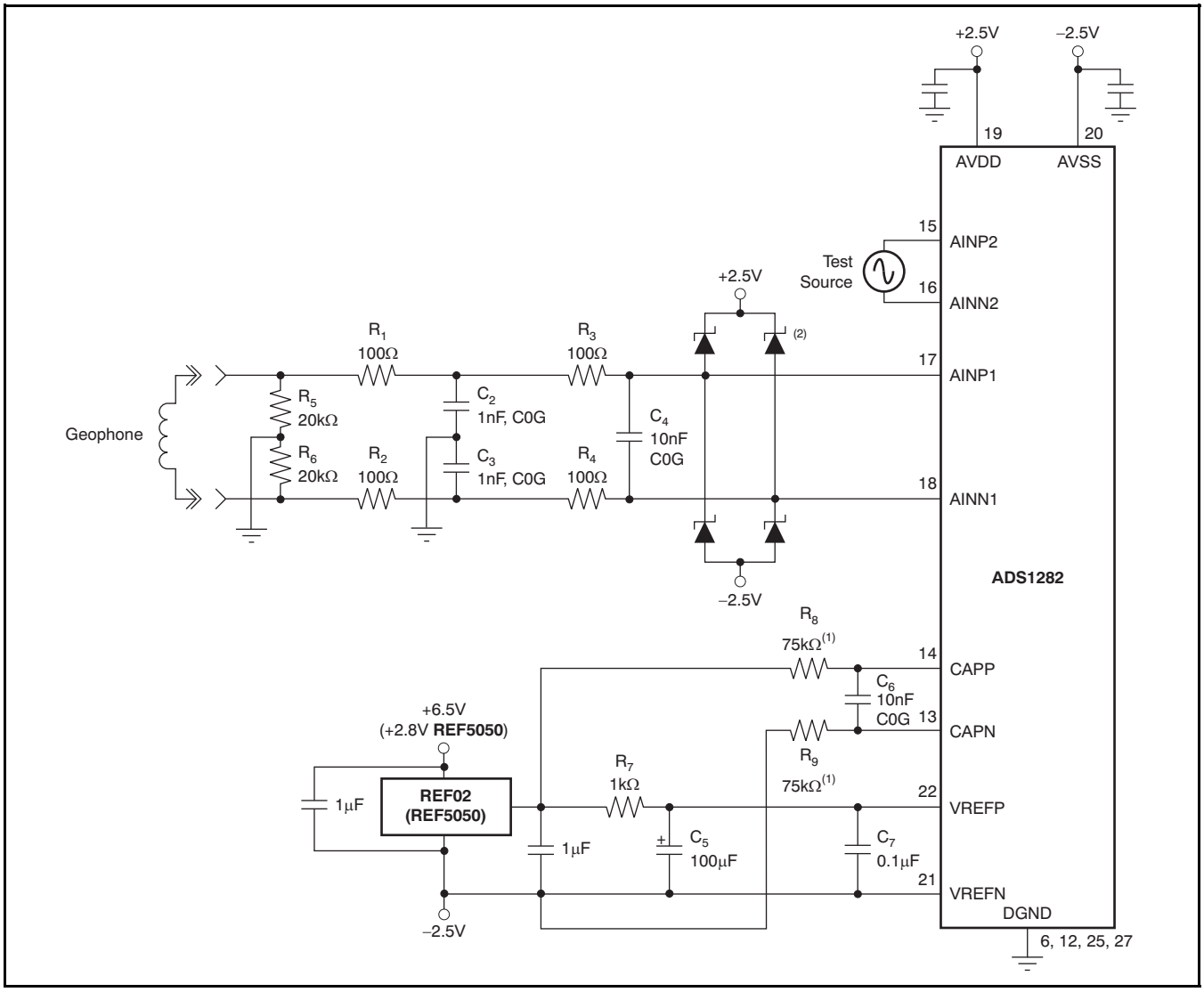

(1) Optional 20mV offset. Match to 0.1% to maintain CMR.

(2) Optional external diode clamps.

Figure 65. Geophone Interface Application

Figure 66 shows the digital connection to a field programmable gate array (FPGA) device. In this example, two ADS1282s are shown connected. The DRDY output from each ADS1282 can be used; however, when the devices are synchronized, the DRDY output from only one device is sufficient. A shared SCLK line between the devices is optional.

The modulator over-range flag (MFLAG) from each device ties to the FPGA. For synchronization, one SYNC control line connects all ADS1282 devices. The RESET line also connects to all ADS1282 devices.

For best performance, the FPGA and the ADS1282s should operate from the same clock. Avoid ringing on the digital inputs. 47Ω resistors in series with the digital traces can help to reduce ringing by controlling impedances. Place the resistors at the source (driver) end of the trace. Unused digital inputs should not float; tie them to DVDD or GND. This includes the modulator data pins, M0, M1, and MCLK.

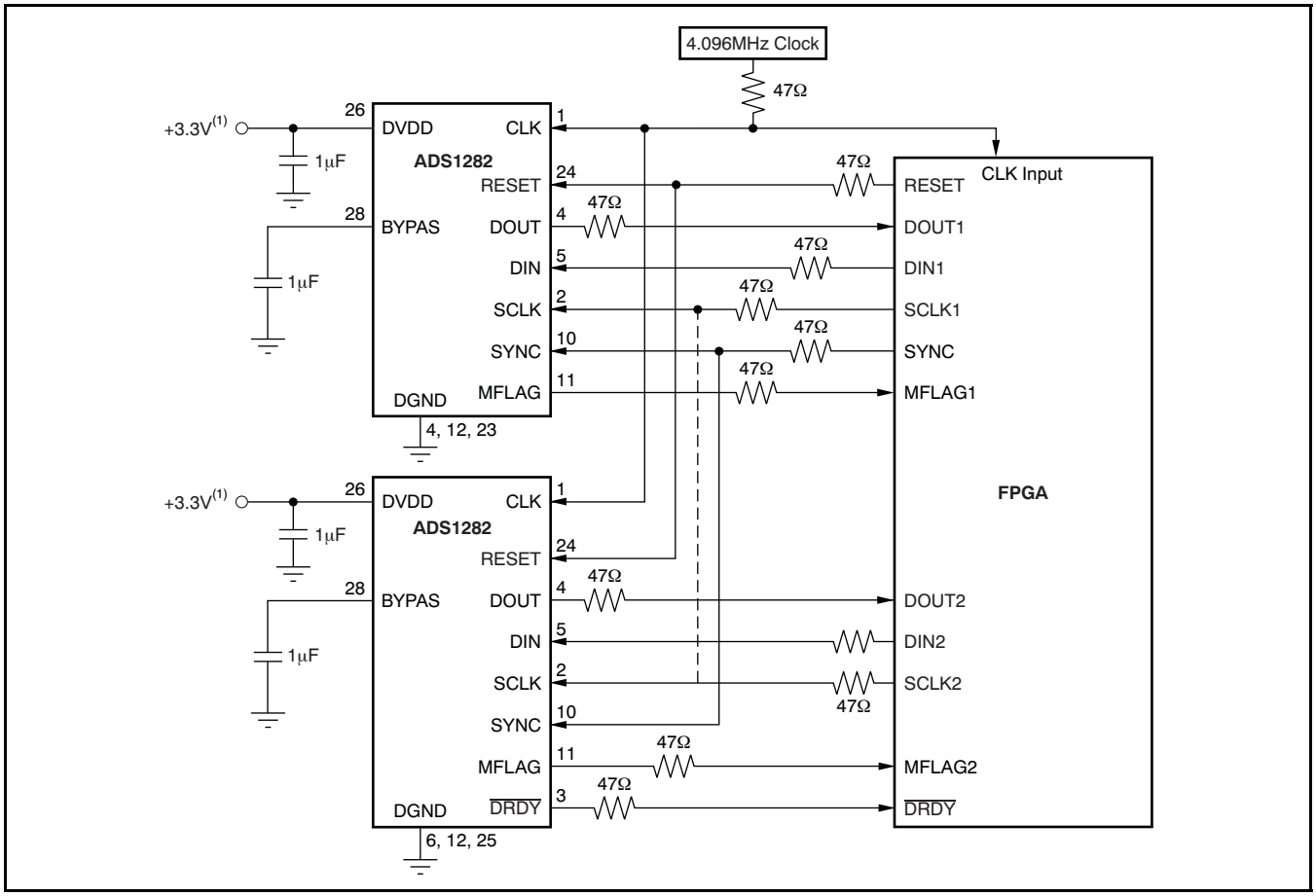

NOTE: Dashed line is optional.

(1) For DVDD < 2.25V, see the *DVDD Power Supply* section.

Figure 66. Microcontroller Interface with Dual ADS1282s

Copyright © 2007–2015, Texas Instruments Incorporated

14 Appendix

Table 34. FIR Stage Coefficients

COEFFICIENT	SESSION 1	SESSION 2	SESSION 3		SESSION 4	
			Scaling = 134217728		Scaling = 134217728	
	LINEAR PHASE SCALING = 1/512	LINEAR PHASE SCALING = 1/8388608	LINEAR PHASE	MINIMUM PHASE	LINEAR PHASE	MINIMUM PHASE
b_0	3	–10944	0	819	–132	11767
b_1	0	0	0	8211	–432	133882
b_2	–25	103807	–73	44880	–75	769961
b_3	0	0	–874	174712	2481	2940447
b_4	150	–507903	–4648	536821	6692	8262605
b_5	256	0	–16147	1372637	7419	17902757
b_6	150	2512192	–41280	3012996	–266	30428735
b_7	0	4194304	–80934	5788605	–10663	40215494
b_8	–25	2512192	–120064	9852286	–8280	39260213
b_9	0	0	–118690	14957445	10620	23325925
b_{10}	3	–507903	–18203	20301435	22008	–1757787
b_{11}		0	224751	24569234	348	–21028126
b_{12}		103807	580196	26260385	–34123	–21293602
b_{13}		0	893263	24247577	–25549	–3886901
b_{14}		–10944	891396	18356231	33460	14396783
b_{15}			293598	9668991	61387	16314388
b_{16}			–987253	327749	–7546	1518875
b_{17}			–2635779	–7171917	–94192	–12979500
b_{18}			–3860322	–10926627	–50629	–11506007
b_{19}			–3572512	–10379094	101135	2769794
b_{20}			–822573	–6505618	134826	12195551
b_{21}			4669054	–1333678	–56626	6103823
b_{22}			12153698	2972773	–220104	–6709466
b_{23}			19911100	5006366	–56082	–9882714
b_{24}			25779390	4566808	263758	–353347
b_{25}			27966862	2505652	231231	8629331
b_{26}			25779390	126331	–215231	5597927
b_{27}			19911100	–1496514	–430178	–4389168
b_{28}			12153698	–1933830	34715	–7594158
b_{29}			4669054	–1410695	580424	–428064
b_{30}			–822573	–502731	283878	6566217
b_{31}			–3572512	245330	–588382	4024593
b_{32}			–3860322	565174	–693209	–3679749
b_{33}			–2635779	492084	366118	–5572954
b_{34}			–987253	231656	1084786	332589
b_{35}			293598	–9196	132893	5136333
b_{36}			891396	–125456	–1300087	2351253
b_{37}			893263	–122207	–878642	–3357202
b_{38}			580196	–61813	1162189	–3767666
b_{39}			224751	–4445	1741565	1087392
b_{40}			–18203	22484	–522533	3847821
b_{41}			–118690	22245	–2490395	919792
b_{42}			–120064	10775	–688945	–2918303

Copyright © 2007–2015, Texas Instruments Incorporated

Table 34. FIR Stage Coefficients (continued)

COEFFICIENT	SESSION 1	SESSION 2	SESSION 3		SESSION 4	
			Scaling = 134217728		Scaling = 134217728	
	LINEAR PHASE SCALING = 1/512	LINEAR PHASE SCALING = 1/8388608	LINEAR PHASE	MINIMUM PHASE	LINEAR PHASE	MINIMUM PHASE
b_{43}			–80934	940	2811738	–2193542
b_{44}			–41280	–2953	2425494	1493873
b_{45}			–16147	–2599	–2338095	2595051
b_{46}			–4648	–1052	–4511116	–79991
b_{47}			–874	–43	641555	–2260106
b_{48}			–73	214	6661730	–963855
b_{49}			0	132	2950811	1482337
b_{50}			0	33	–8538057	1480417
b_{51}			0	0	–10537298	–586408
b_{52}					9818477	–1497356
b_{53}					41426374	–168417
b_{54}					56835776	1166800
b_{55}					41426374	644405
b_{56}					9818477	–675082
b_{57}					–10537298	–806095
b_{58}					–8538057	211391
b_{59}					2950811	740896
b_{60}					6661730	141976
b_{61}					641555	–527673
b_{62}					–4511116	–327618
b_{63}					–2338095	278227
b_{64}					2425494	363809
b_{65}					2811738	–70646
b_{66}					–688945	–304819
b_{67}					–2490395	–63159
b_{68}					–522533	205798
b_{69}					1741565	124363
b_{70}					1162189	–107173
b_{71}					–878642	–131357
b_{72}					–1300087	31104
b_{73}					132893	107182
b_{74}					1084786	15644
b_{75}					366118	–71728
b_{76}					–693209	–36319
b_{77}					–588382	38331
b_{78}					283878	38783
b_{79}					580424	–13557
b_{80}					34715	–31453
b_{81}					–430178	–1230
b_{82}					–215231	20983
b_{83}					231231	7729
b_{84}					263758	–11463
b_{85}					–56082	–8791
b_{86}					–220104	4659
b_{87}					–56626	7126

Copyright © 2007–2015, Texas Instruments Incorporated

Table 34. FIR Stage Coefficients (continued)

COEFFICIENT	SESSION 1	SESSION 2	SESSION 3		SESSION 4	
			Scaling = 134217728		Scaling = 134217728	
	LINEAR PHASE SCALING = 1/512	LINEAR PHASE SCALING = 1/8388608	LINEAR PHASE	MINIMUM PHASE	LINEAR PHASE	MINIMUM PHASE
b_{88}					134826	–732
b_{89}					101135	–4687
b_{90}					–50629	–976
b_{91}					–94192	2551
b_{92}					–7546	1339
b_{93}					61387	–1103
b_{94}					33460	–1085
b_{95}					–25549	314
b_{96}					–34123	681
b_{97}					348	16
b_{98}					22008	–349
b_{99}					10620	–96
b_{100}					–8280	144
b_{101}					–10663	78
b_{102}					–266	–46
b_{103}					7419	–42
b_{104}					6692	9
b_{105}					2481	16
b_{106}					–75	0
b_{107}					–432	–4
b_{108}					–132	0
b_{109}					0	0

Copyright © 2007–2015, Texas Instruments Incorporated

$$\text{HPF Gain} = \frac{1 + \sqrt{1 - 2\left(\frac{\cos\omega_N + \sin\omega_N - 1}{\cos\omega_N}\right)}}{2 - \left(\frac{\cos\omega_N + \sin\omega_N - 1}{\cos\omega_N}\right)} \tag{13}$$

See the *HPF Stage* section for an example of how to use this equation.

HPF Transfer Function

$$\text{HPF}(Z) = \frac{2 - a}{2} \times \frac{1 - Z^{-1}}{1 - bZ^{-1}} \tag{14}$$

where *b* is calculated as shown in Equation 15:

$$b = \frac{1 + (1 - a)^2}{2} \tag{15}$$

Table 35. t_{DR} Time for Data Ready (Sinc Filter)

f_{DATA}	f_{CLK} (1)
128k	440
64k	616
32k	968
16k	1672
8k	2824

(1) For SYNC and Wake-Up commands, f_{CLK} = number of CLK cycles from next rising CLK edge directly after eighth rising SCLK edge to $\overline{\text{DRDY}}$ falling edge. For Wake-Up command only, subtract two f_{CLK} cycles.

Table 35 is referenced by Table 10 and Table 12.

Copyright © 2007–2015, Texas Instruments Incorporated

15 Revision History

NOTE: Page numbers for previous revisions may differ from page numbers in the current version.

Changes from Revision H (August 2013) to Revision I	Page
• Deleted low-power mode from data sheet, and made high-resolution mode default.	1
• Changed MODE bit to 1 in register map after removing mode option	35
• Deleted MODE bit from CONFIG0; changed to 1	36

Changes from Revision G (May 2010) to Revision H	Page
• Added ADS1282H device to data sheet	1
• Added *Chop off* test condition to *Differential Input Impedance* parameter	3
• Added ADS1282H description	12

Changes from Revision F (March 2009) to Revision G	Page
• Corrected typical specification in Digital Filter Response, *Minimum phase filter settling time* in Electrical Characteristics table	4
• Corrected units typo of Figure 41	20
• Moved Equation 14 and Equation 15 to the *Appendix* from the *HPF Stage* section	21
• Added footnote 2 to Table 13, Ideal Output Code	26
• Corrected sign typo in Equation 13	46

Changes from Revision E (October 2008) to Revision F	Page
• Added t_{CMD} specification for low-power mode in Modulator Output Timing table	17
• Updated Equation 7	18
• Updated Equation 8	19
• Updated Figure 41	20
• Minor graphical edits to Figure 47	23
• Minor graphical edits to Figure 48	23
• Changed $466/f_{CLK}$ to $468/f_{CLK}$ in t_{DR} row of Table 10	23
• Updated Figure 65, showing alternate bias resistor location	41
• Corrected Table 34 (*Appendix, FIR Stage Coefficients*)	43

PACKAGING INFORMATION

Orderable part number	Status (1)	Material type (2)	Package | Pins	Package qty | Carrier	RoHS (3)	Lead finish/ Ball material (4)	MSL rating/ Peak reflow (5)	Op temp (°C)	Part marking (6)
ADS1282HIPW	Active	Production	TSSOP (PW) | 28	50 | TUBE	Yes	NIPDAU	Level-1-260C-UNLIM	-40 to 85	ADS1282HI
ADS1282HIPW.A	Active	Production	TSSOP (PW) | 28	50 | TUBE	Yes	NIPDAU	Level-1-260C-UNLIM	-40 to 85	ADS1282HI
ADS1282HIPWR	Active	Production	TSSOP (PW) | 28	2000 | LARGE T&R	Yes	NIPDAU	Level-1-260C-UNLIM	-40 to 85	ADS1282HI
ADS1282HIPWR.A	Active	Production	TSSOP (PW) | 28	2000 | LARGE T&R	Yes	NIPDAU	Level-1-260C-UNLIM	-40 to 85	ADS1282HI
ADS1282IPW	Active	Production	TSSOP (PW) | 28	50 | TUBE	Yes	NIPDAU	Level-1-260C-UNLIM	-40 to 85	ADS1282
ADS1282IPW.A	Active	Production	TSSOP (PW) | 28	50 | TUBE	Yes	NIPDAU	Level-1-260C-UNLIM	-40 to 85	ADS1282
ADS1282IPW.B	Active	Production	TSSOP (PW) | 28	50 | TUBE	Yes	NIPDAU	Level-1-260C-UNLIM	-40 to 85	ADS1282
ADS1282IPWG4	Active	Production	TSSOP (PW) | 28	50 | TUBE	-	NIPDAU	Level-1-260C-UNLIM	-40 to 85	ADS1282
ADS1282IPWG4.A	Active	Production	TSSOP (PW) | 28	50 | TUBE	Yes	NIPDAU	Level-1-260C-UNLIM	-40 to 85	ADS1282
ADS1282IPWG4.B	Active	Production	TSSOP (PW) | 28	50 | TUBE	Yes	NIPDAU	Level-1-260C-UNLIM	-40 to 85	ADS1282
ADS1282IPWR	Active	Production	TSSOP (PW) | 28	2000 | LARGE T&R	Yes	NIPDAU	Level-1-260C-UNLIM	-40 to 85	ADS1282
ADS1282IPWR.A	Active	Production	TSSOP (PW) | 28	2000 | LARGE T&R	Yes	NIPDAU	Level-1-260C-UNLIM	-40 to 85	ADS1282
ADS1282IPWR.B	Active	Production	TSSOP (PW) | 28	2000 | LARGE T&R	Yes	NIPDAU	Level-1-260C-UNLIM	-40 to 85	ADS1282

(1) **Status:** For more details on status, see our product life cycle.

(2) **Material type:** When designated, preproduction parts are prototypes/experimental devices, and are not yet approved or released for full production. Testing and final process, including without limitation quality assurance, reliability performance testing, and/or process qualification, may not yet be complete, and this item is subject to further changes or possible discontinuation. If available for ordering, purchases will be subject to an additional waiver at checkout, and are intended for early internal evaluation purposes only. These items are sold without warranties of any kind.

(3) **RoHS values:** Yes, No, RoHS Exempt. See the TI RoHS Statement for additional information and value definition.

(4) **Lead finish/Ball material:** Parts may have multiple material finish options. Finish options are separated by a vertical ruled line. Lead finish/Ball material values may wrap to two lines if the finish value exceeds the maximum column width.

(5) **MSL rating/Peak reflow:** The moisture sensitivity level ratings and peak solder (reflow) temperatures. In the event that a part has multiple moisture sensitivity ratings, only the lowest level per JEDEC standards is shown. Refer to the shipping label for the actual reflow temperature that will be used to mount the part to the printed circuit board.

(6) **Part marking:** There may be an additional marking, which relates to the logo, the lot trace code information, or the environmental category of the part.

Multiple part markings will be inside parentheses. Only one part marking contained in parentheses and separated by a "~" will appear on a part. If a line is indented then it is a continuation of the previous line and the two combined represent the entire part marking for that device.

Important Information and Disclaimer: The information provided on this page represents TI's knowledge and belief as of the date that it is provided. TI bases its knowledge and belief on information provided by third parties, and makes no representation or warranty as to the accuracy of such information. Efforts are underway to better integrate information from third parties. TI has taken and continues to take reasonable steps to provide representative and accurate information but may not have conducted destructive testing or chemical analysis on incoming materials and chemicals. TI and TI suppliers consider certain information to be proprietary, and thus CAS numbers and other limited information may not be available for release.

In no event shall TI's liability arising out of such information exceed the total purchase price of the TI part(s) at issue in this document sold by TI to Customer on an annual basis.

OTHER QUALIFIED VERSIONS OF ADS1282 :

- Space : ADS1282-SP

NOTE: Qualified Version Definitions:

- Space - Radiation tolerant, ceramic packaging and qualified for use in Space-based application

TAPE AND REEL INFORMATION

REEL DIMENSIONS

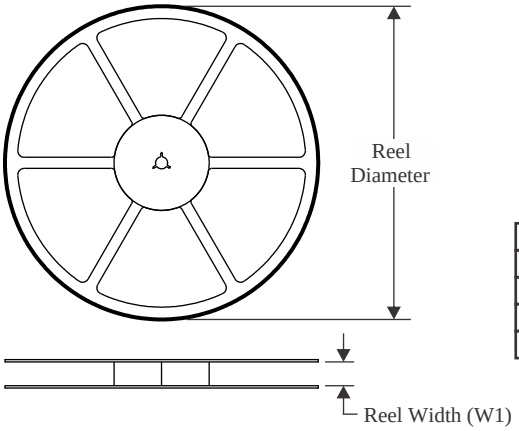

TAPE DIMENSIONS

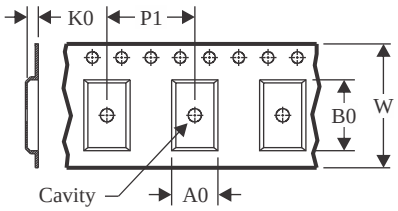

A0	Dimension designed to accommodate the component width
B0	Dimension designed to accommodate the component length
K0	Dimension designed to accommodate the component thickness
W	Overall width of the carrier tape
P1	Pitch between successive cavity centers

QUADRANT ASSIGNMENTS FOR PIN 1 ORIENTATION IN TAPE

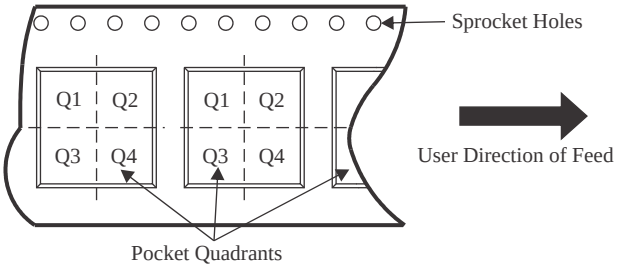

*All dimensions are nominal

Device	Package Type	Package Drawing	Pins	SPQ	Reel Diameter (mm)	Reel Width W1 (mm)	A0 (mm)	B0 (mm)	K0 (mm)	P1 (mm)	W (mm)	Pin1 Quadrant
ADS1282HIPWR	TSSOP	PW	28	2000	330.0	16.4	6.9	10.2	1.8	12.0	16.0	Q1
ADS1282IPWR	TSSOP	PW	28	2000	330.0	16.4	6.9	10.2	1.8	12.0	16.0	Q1

TAPE AND REEL BOX DIMENSIONS

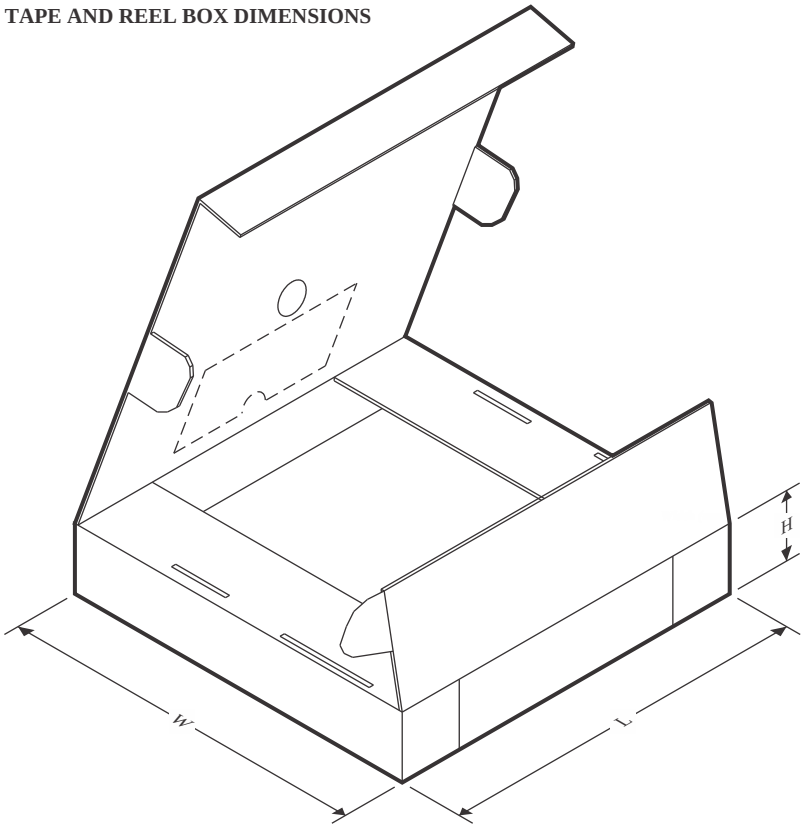

*All dimensions are nominal

Device	Package Type	Package Drawing	Pins	SPQ	Length (mm)	Width (mm)	Height (mm)
ADS1282HIPWR	TSSOP	PW	28	2000	350.0	350.0	43.0
ADS1282IPWR	TSSOP	PW	28	2000	350.0	350.0	43.0

TUBE

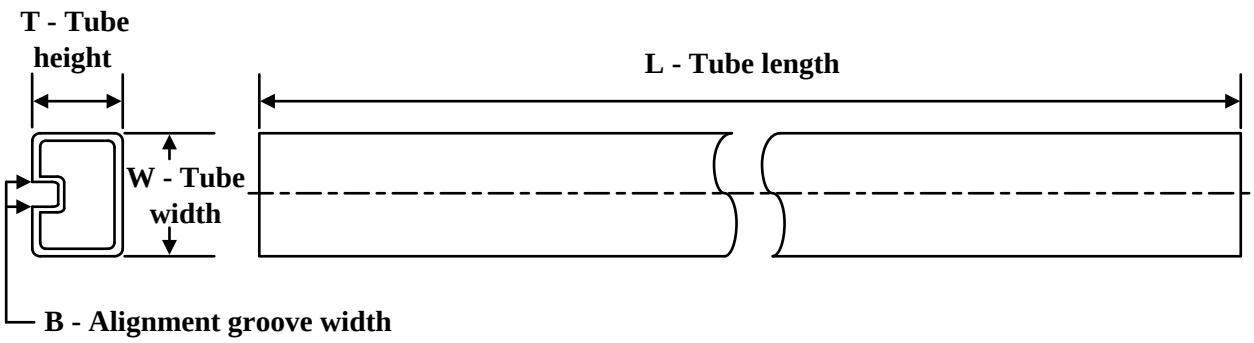

*All dimensions are nominal

Device	Package Name	Package Type	Pins	SPQ	L (mm)	W (mm)	T (µm)	B (mm)
ADS1282HIPW	PW	TSSOP	28	50	530	10.2	3600	3.5
ADS1282HIPW.A	PW	TSSOP	28	50	530	10.2	3600	3.5
ADS1282IPW	PW	TSSOP	28	50	530	10.2	3600	3.5
ADS1282IPW.A	PW	TSSOP	28	50	530	10.2	3600	3.5
ADS1282IPW.B	PW	TSSOP	28	50	530	10.2	3600	3.5
ADS1282IPWG4	PW	TSSOP	28	50	530	10.2	3600	3.5
ADS1282IPWG4.A	PW	TSSOP	28	50	530	10.2	3600	3.5
ADS1282IPWG4.B	PW	TSSOP	28	50	530	10.2	3600	3.5

PW (R-PDSO-G28) PLASTIC SMALL OUTLINE

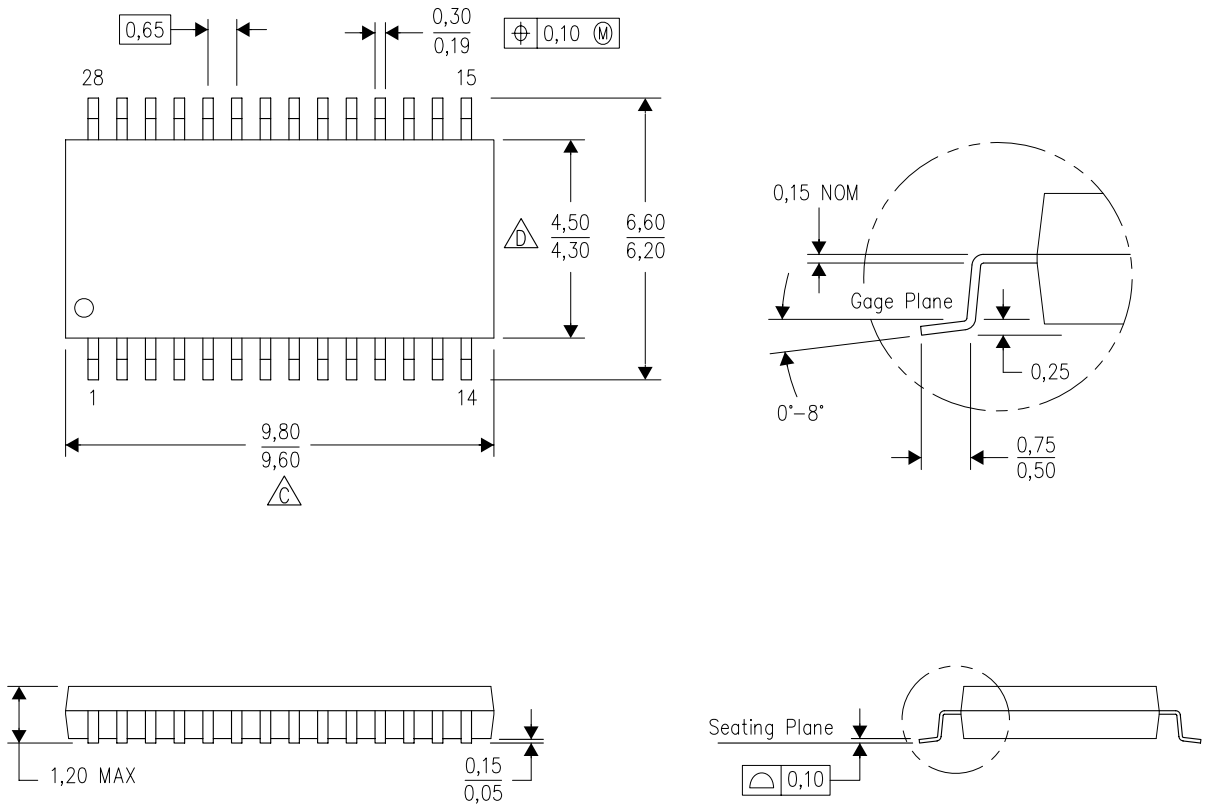

NOTES:
A. All linear dimensions are in millimeters. Dimensioning and tolerancing per ASME Y14.5M–1994.
B. This drawing is subject to change without notice.
C. Body length does not include mold flash, protrusions, or gate burrs. Mold flash, protrusions, or gate burrs shall not exceed 0,15 each side.
D. Body width does not include interlead flash. Interlead flash shall not exceed 0,25 each side.
E. Falls within JEDEC MO-153

IMPORTANT NOTICE AND DISCLAIMER

TI PROVIDES TECHNICAL AND RELIABILITY DATA (INCLUDING DATASHEETS), DESIGN RESOURCES (INCLUDING REFERENCE DESIGNS), APPLICATION OR OTHER DESIGN ADVICE, WEB TOOLS, SAFETY INFORMATION, AND OTHER RESOURCES “AS IS” AND WITH ALL FAULTS, AND DISCLAIMS ALL WARRANTIES, EXPRESS AND IMPLIED, INCLUDING WITHOUT LIMITATION ANY IMPLIED WARRANTIES OF MERCHANTABILITY, FITNESS FOR A PARTICULAR PURPOSE OR NON-INFRINGEMENT OF THIRD PARTY INTELLECTUAL PROPERTY RIGHTS.

These resources are intended for skilled developers designing with TI products. You are solely responsible for (1) selecting the appropriate TI products for your application, (2) designing, validating and testing your application, and (3) ensuring your application meets applicable standards, and any other safety, security, regulatory or other requirements.

These resources are subject to change without notice. TI grants you permission to use these resources only for development of an application that uses the TI products described in the resource. Other reproduction and display of these resources is prohibited. No license is granted to any other TI intellectual property right or to any third party intellectual property right. TI disclaims responsibility for, and you fully indemnify TI and its representatives against any claims, damages, costs, losses, and liabilities arising out of your use of these resources.

TI’s products are provided subject to TI’s Terms of Sale, TI’s General Quality Guidelines, or other applicable terms available either on ti.com or provided in conjunction with such TI products. TI’s provision of these resources does not expand or otherwise alter TI’s applicable warranties or warranty disclaimers for TI products. Unless TI explicitly designates a product as custom or customer-specified, TI products are standard, catalog, general purpose devices.

TI objects to and rejects any additional or different terms you may propose.

Copyright © 2026, Texas Instruments Incorporated

Last updated 10/2025