ADS54J64 Quad-Channel, 14-Bit, 1-GSPS, 2x Oversampling, Analog-to-Digital Converter

1 Features

- Quad Channel, 14-Bit Resolution
- Maximum Sampling Rate: 1 GSPS
- Maximum Output Sample Rate: 500 MSPS
- High-Impedance Analog Input Buffer
- Analog Input Bandwidth (–3 dB): 1 GHz
- Output Options:
  - Digital Down Conversion (DDC) Using 16-Bit NCO
  - DDC Bypass With Full Rate Output Up to 500 MSPS
- Differential Full-Scale Input: 1.1 V_{PP}
- JESD204B Interface:
  - Subclass 1 Support
  - 1 Lane per ADC Up to 10 Gbps
  - Dedicated SYNC Pin for Pair of Channels
- Support for Multi-Chip Synchronization
- Spectral Performance:
  - f_{IN} = 190-MHz IF at –1 dBFS:
    - SNR: 69 dBFS
    - NSD: –153 dBFS/Hz
    - SFDR: 86 dBc (HD2, HD3), 95 dBFS (Non HD2, HD3)
  - f_{IN} = 370-MHz IF at –3 dBFS:
    - SNR: 68.5 dBFS
    - NSD: –152.5 dBFS/Hz
    - SFDR: 80 dBc (HD2, HD3), 86 dBFS (Non HD2, HD3)
- 72-Pin VQFN Package (10 mm × 10 mm)
- Power Consumption: 625 mW/Ch, 2.5 W Total
- Power Supplies: 1.15 V, 1.15 V, 1.9 V

2 Applications

- Multi-Carrier Multi-Mode, GSM Cellular Infrastructure Base Stations
- Telecommunications Receivers
- Radar and Antenna Arrays
- Cable CMTS, DOCSIS 3.1 Receivers
- Communications Test Equipment
- Microwave Receivers
- Software Defined Radio (SDR)
- Digitizers
- Medical Imaging and Diagnostics

3 Description

The ADS54J64 device is a quad-channel, 14-bit, 1-GSPS, analog-to-digital converter (ADC) offering wide-bandwidth, 2x oversampling and high SNR. The ADS54J64 supports a JESD204B serial interface with data rates up to 10 Gbps with one lane per channel. The buffered analog input provides uniform impedance across a wide frequency range and minimizes sample-and-hold glitch energy. The ADS54J64 provides excellent spurious-free dynamic range (SFDR) over a large input frequency range with very low power consumption. The digital signal processing block includes complex mixers followed by low-pass filters with decimate-by-2 and -4 options supporting up to a 200-MHz receive bandwidth. The ADS54J64 also supports a 14-bit, 500-MSPS output in DDC bypass mode.

A four-lane JESD204B interface simplifies connectivity, allowing high system integration density. An internal phase-locked loop (PLL) multiplies the incoming ADC sampling clock to derive the bit clock that is used to serialize the 14-bit data from each channel.

Device Information(1)

PART NUMBER	PACKAGE	BODY SIZE (NOM)
ADS54J64	VQFN (72)	10.00 mm × 10.00 mm

(1) For all available packages, see the orderable addendum at the end of the data sheet.

Simplified Block Diagram

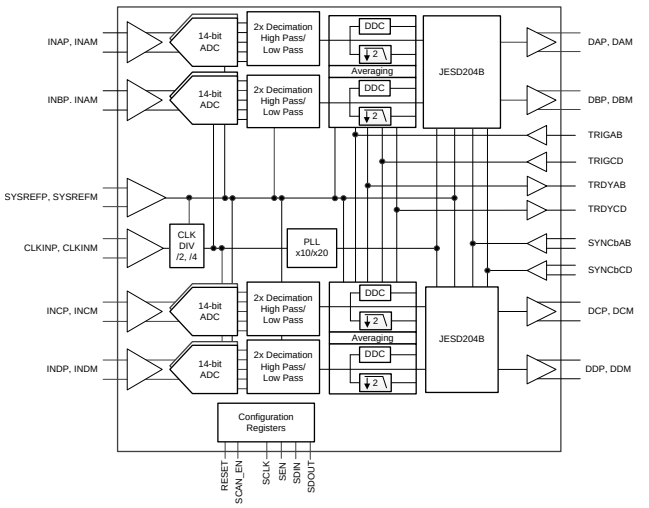

Copyright © 2017, Texas Instruments Incorporated

An IMPORTANT NOTICE at the end of this data sheet addresses availability, warranty, changes, use in safety-critical applications, intellectual property matters and other important disclaimers. PRODUCTION DATA.

Table of Contents

1 Features ... 1
2 Applications ... 1
3 Description ... 1
4 Revision History ... 2
5 Pin Configuration and Functions ... 3
6 Specifications ... 5
6.1 Absolute Maximum Ratings ... 5
6.2 ESD Ratings ... 5
6.3 Recommended Operating Conditions ... 5
6.4 Thermal Information ... 6
6.5 Electrical Characteristics ... 7
6.6 AC Performance ... 8
6.7 Digital Characteristics ... 10
6.8 Timing Characteristics ... 11
6.9 Typical Characteristics: DDC Bypass Mode ... 12
6.10 Typical Characteristics: Mode 2 ... 18
6.11 Typical Characteristics: Mode 0 ... 19
6.12 Typical Characteristics: Dual ADC Mode ... 20
7 Detailed Description ... 21
7.1 Overview ... 21
7.2 Functional Block Diagram ... 21
7.3 Feature Description ... 22
7.4 Device Functional Modes ... 23
7.5 Programming ... 31
7.6 Register Maps ... 38
8 Application and Implementation ... 64
8.1 Application Information ... 64
8.2 Typical Application ... 71
9 Power Supply Recommendations ... 72
10 Layout ... 73
10.1 Layout Guidelines ... 73
10.2 Layout Example ... 73
11 Device and Documentation Support ... 74
11.1 Receiving Notification of Documentation Updates 74
11.2 Community Resources ... 74
11.3 Trademarks ... 74
11.4 Electrostatic Discharge Caution ... 74
11.5 Glossary ... 74
12 Mechanical, Packaging, and Orderable Information ... 74

4 Revision History

NOTE: Page numbers for previous revisions may differ from page numbers in the current version.

DATE	REVISION	NOTES
October 2017	*	Initial release.

Copyright © 2017, Texas Instruments Incorporated

5 Pin Configuration and Functions

RMP Package
72-Pin VQFN
Top View

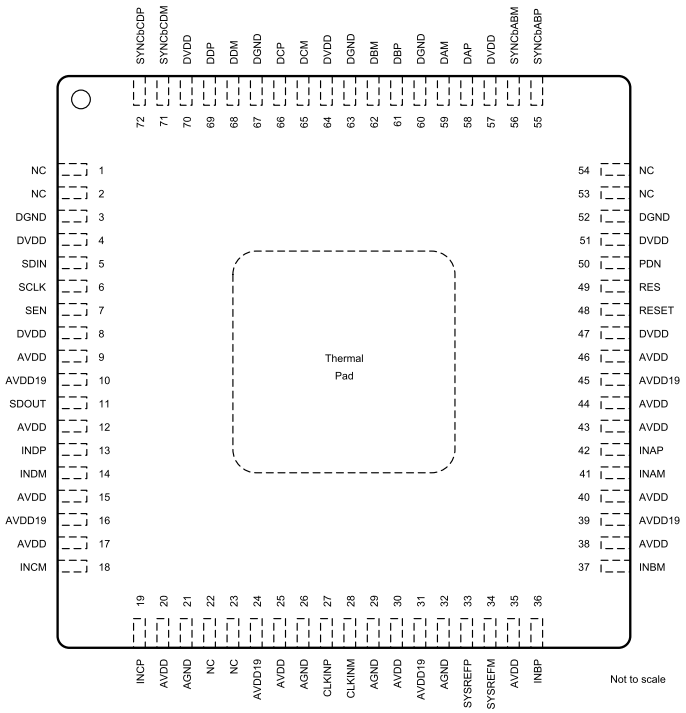

Pin Functions

PIN		I/O	DESCRIPTION
NAME	NO.		
INPUT, REFERENCE			
INAM	41	I	Differential analog input pin for channel A, internal bias via a 2-kΩ resistor to V_{CM}
INAP	42		
INBM	37	I	Differential analog input pin for channel B, internal bias via a 2-kΩ resistor to V_{CM}
INBP	36		
INCM	18	I	Differential analog input pin for channel C, internal bias via a 2-kΩ resistor to V_{CM}
INCP	19		
INDM	14	I	Differential analog input pin for channel D, internal bias via a 2-kΩ resistor to V_{CM}
INDP	13		
CLOCK, SYNC			
CLKINM	28	I	Differential clock input pin for the ADC with internal 100-Ω differential termination; requires external ac coupling
CLKINP	27		
SYSREFM	34	I	External SYSREF input; requires dc coupling and external termination
SYSREFP	33		

Copyright © 2017, Texas Instruments Incorporated

Pin Functions (continued)

PIN		I/O	DESCRIPTION
NAME	NO.		
CONTROL, SERIAL			
NC	1, 2, 22, 23, 53, 54	—	No connection
PDN	50	I/O	Power down. This pin can be configured via an SPI register setting. This pin has an internal 10-kΩ pulldown resistor.
RES	49	—	Reserved pin, connect to GND
RESET	48	I	Hardware reset; active high. This pin has an internal 10-kΩ pulldown resistor.
SCLK	6	I	Serial interface clock input. This pin has an internal 10-kΩ pulldown resistor.
SDIN	5	I	Serial interface data input. This pin has an internal 10-kΩ pulldown resistor.
SDOUT	11	O	1.8-V logic serial interface data output
SEN	7	I	Serial interface enable. This pin has an internal 10-kΩ pullup resistor to DVDD.
DATA INTERFACE			
DAM	59	O	JESD204B serial data output pin for channel A
DAP	58		
DBM	62	O	JESD204B serial data output pin for channel B
DBP	61		
DCM	65	O	JESD204B serial data output pin for channel C
DCP	66		
DDM	68	O	JESD204B serial data output pin for channel D
DDP	69		
SYNCbABM	56	I	Synchronization input pin for JESD204B port channels A and B. This pin can be configured via SPI to a SYNCb signal for all four channels. This pin has an internal differential termination of 100 Ω.
SYNCbABP	55		
SYNCbCDM	71	I	Synchronization input pin for JESD204B port channels C and D. This pin can be configured via SPI to a SYNCb signal for all four channels. This pin has an internal differential termination of 100 Ω.
SYNCbCDP	72		
POWER SUPPLY			
AGND	21, 26, 29, 32	I	Analog ground
AVDD	9, 12, 15, 17, 20, 25, 30, 35, 38, 40, 43, 44, 46	I	Analog 1.15-V power supply
AVDD19	10, 16, 24, 31, 39, 45	I	Analog 1.9-V supply for analog buffer
DGND	3, 52, 60, 63, 67	I	Digital ground
DVDD	4, 8, 47,51, 57, 64, 70	I	Digital 1.15-V power supply
Thermal pad	Pad	—	Connect to GND

Copyright © 2017, Texas Instruments Incorporated

6 Specifications

6.1 Absolute Maximum Ratings

over operating free-air temperature range (unless otherwise noted)(1)

		MIN	MAX	UNIT
Supply voltage	AVDD19	–0.3	2.1	V
	AVDD	–0.3	1.4	
	DVDD	–0.3	1.4	
Voltage between AGND and DGND		–0.3	0.3	V
Voltage applied to input pins	INAP, INBP, INAM, INBM, INCP, INDP, INCM, INDM	–0.3	2.1	V
	CLKINP, CLKINM	–0.3	AVDD + 0.3	
	SYSREFP, SYSREFM	–0.3	1.9	
	SCLK, SEN, SDIN, RESET, SYNCbABP, SYNCbABM, SYNCbCDP, SYNCbCDM, PDN, TRIGAB, TRIGCD	–0.2	AVDD19 + 0.3	
Storage temperature, T_{stg}		–65	150	°C

(1) Stresses beyond those listed under *Absolute Maximum Ratings* may cause permanent damage to the device. These are stress ratings only, which do not imply functional operation of the device at these or any other conditions beyond those indicated under *Recommended Operating Conditions*. Exposure to absolute-maximum-rated conditions for extended periods may affect device reliability.

6.2 ESD Ratings

			VALUE	UNIT
$V_{(ESD)}$	Electrostatic discharge	Human-body model (HBM), per ANSI/ESDA/JEDEC JS-001(1)	±2000	V

(1) JEDEC document JEP155 states that 500-V HBM allows safe manufacturing with a standard ESD control process.

6.3 Recommended Operating Conditions

over operating free-air temperature range (unless otherwise noted)

			MIN	NOM	MAX	UNIT
Supply voltage range	AVDD19		1.8	1.9	2	V
	AVDD		1.1	1.15	1.2	
	DVDD		1.1	1.15	1.2	
Analog inputs	Differential input voltage range			1.1		V_{PP}
	Input common-mode voltage (VCM)			1.3		V
Clock inputs	Input clock frequency, device clock frequency		400		1000	MHz
	Input clock amplitude differential ($V_{CLKP} – V_{CLKM}$)	Sine wave, ac-coupled		1.5		V_{PP}
		LVPECL, ac-coupled		1.6		
		LVDS, ac-coupled		0.7		
	Input device clock duty cycle, default after reset		45%	50%	55%	
Temperature	Operating free-air, T_A		–40		100(1)	°C
	Operating junction, T_J				105(2)	
	Specified maximum, measured at the device footprint thermal pad on the printed circuit board, T_{P-MAX}				104.5(3)	

(1) Assumes system thermal design meets the T_J specification.
(2) Prolonged use above this junction temperature can increase the device failure-in-time (FIT) rate.
(3) The recommended maximum temperature at the PCB footprint thermal pad assumes the junction-to-package bottom thermal resistance, $R_{\theta JC(bot)}$ = 0.2°C/W, the thermal resistance of the device thermal pad connection to the PCB footprint is negligible, and the device power consumption is 2.5 W.

Copyright © 2017, Texas Instruments Incorporated

6.4 Thermal Information

THERMAL METRIC(1)		ADS54J64 RMP (VQFNP) 72 PINS	UNIT
$R_{\theta JA}$	Junction-to-ambient thermal resistance (2)	22.3	°C/W
$R_{\theta JC(top)}$	Junction-to-case (top) thermal resistance (3)	5.1	°C/W
$R_{\theta JB}$	Junction-to-board thermal resistance (3)	2.4	°C/W
ψ_{JT}	Junction-to-top characterization parameter (4)	0.1	°C/W
ψ_{JB}	Junction-to-board characterization parameter (5)	2.3	°C/W
$R_{\theta JC(bot)}$	Junction-to-case (bottom) thermal resistance (6)	0.2	°C/W

(1) For more information about traditional and new thermal metrics, see the *Semiconductor and IC Package Thermal Metrics* application report.
(2) The junction-to-ambient thermal resistance under natural convection is obtained in a simulation on a JEDEC-standard, high-K board, as specified in JESD51-7, in an environment described in JESD51-2a.
(3) The junction-to-case (top) thermal resistance is obtained by simulating a cold plate test on the package top. No specific JEDEC-standard test exists, but a close description can be found in the ANSI SEMI standard G30-88.
(4) The junction-to-board thermal resistance is obtained by simulating in an environment with a ring cold plate fixture to control the PCB temperature, as described in JESD51-8.
(5) The junction-to-top characterization parameter, ψJT, estimates the junction temperature of a device in a real system and is extracted from the simulation data for obtaining θJA, using a procedure described in JESD51-2a (sections 6 and 7).
(6) The junction-to-board characterization parameter, ψJB, estimates the junction temperature of a device in a real system and is extracted from the simulation data for obtaining θJA , using a procedure described in JESD51-2a (sections 6 and 7).

Copyright © 2017, Texas Instruments Incorporated

6.5 Electrical Characteristics

typical values are at T_A = 25°C, full temperature range is from T_{MIN} = –40°C to T_{MAX} = +100°C, input clock frequency = 1 GHz, 50% clock duty cycle, output sample rate = 500 MSPS, AVDD19 = 1.9 V, AVDD = DVDD = 1.15 V, –1-dBFS differential input, and f_{IN} = 190 MHz (unless otherwise noted)

PARAMETER		TEST CONDITIONS	MIN	TYP	MAX	UNIT
GENERAL						
	ADC sampling rate				1	GSPS
	Resolution		14			Bits
POWER SUPPLY						
AVDD19	1.9-V analog supply		1.85	1.9	1.95	V
AVDD	1.15-V analog supply		1.1	1.15	1.2	V
DVDD	1.15-V digital supply		1.1	1.15	1.2	V
I_{AVDD19}	1.9-V analog supply current	100-MHz, full-scale input on all four channels		618		mA
I_{AVDD}	1.15-V analog supply current	100-MHz, full-scale input on all four channels		415		mA
I_{DVDD}	1.15-V digital supply current	DDC bypass mode (mode 8), 100-MHz, full-scale input on all four channels		629		mA
		Mode 3, 100-MHz, full-scale input on all four channels		730		
		Mode 0 and 2, 100-MHz, full-scale input on all four channels		674		
		Mode 1, 4, 6, and 7, 100-MHz, full-scale input on all four channels		703		
P_{DIS}	Total power dissipation	DDC bypass mode (mode 8), 100-MHz, full-scale input on all four channels		2.37		W
		Mode 3, 100-MHz, full-scale input on all four channels		2.49		
		Mode 0 and 2, 100-MHz, full-scale input on all four channels		2.42		
		Mode 1, 4, 6, and 7, 100-MHz, full-scale input on all four channels		2.46		
	Global power-down power dissipation	Full-scale input on all four channels		120		mW
ANALOG INPUTS						
	Differential input full-scale voltage			1.1		V_{PP}
	Input common-mode voltage			1.3		V
	Differential input resistance	At f_{IN} = dc		4		kΩ
	Differential input capacitance			2.5		pF
	Analog input bandwidth (3 dB)			1000		MHz
ISOLATION						
	Crosstalk(1) isolation between near channels (channels A and B are near to each other, channels C and D are near to each other)	f_{IN} = 10 MHz		75		dBFS
		f_{IN} = 100 MHz		75		
		f_{IN} = 170 MHz		74		
		f_{IN} = 270 MHz		72		
		f_{IN} = 370 MHz		71		
		f_{IN} = 470 MHz		70		
	Crosstalk(1) isolation between far channels (channels A and B are far from channels C and D)	f_{IN} = 10 MHz		110		dBFS
		f_{IN} = 100 MHz		110		
		f_{IN} = 170 MHz		110		
		f_{IN} = 270 MHz		110		
		f_{IN} = 370 MHz		110		
		f_{IN} = 470 MHz		110		

(1) Crosstalk is measured with a –1-dBFS input signal on the aggressor channel and no input on the victim channel.

Copyright © 2017, Texas Instruments Incorporated

Electrical Characteristics (continued)

typical values are at T_A = 25°C, full temperature range is from T_{MIN} = –40°C to T_{MAX} = +100°C, input clock frequency = 1 GHz, 50% clock duty cycle, output sample rate = 500 MSPS, AVDD19 = 1.9 V, AVDD = DVDD = 1.15 V, –1-dBFS differential input, and f_{IN} = 190 MHz (unless otherwise noted)

PARAMETER	TEST CONDITIONS	MIN	TYP	MAX	UNIT
CLOCK INPUT					
Internal clock biasing	CLKINP and CLKINM pins are connected to the internal biasing voltage through a 5-kΩ resistor		0.7		V

6.6 AC Performance

typical values are at T_A = 25°C, full temperature range is from T_{MIN} = –40°C to T_{MAX} = +100°C, input clock frequency = 1 GHz, 50% clock duty cycle, output sample rate = 500 MSPS, AVDD19 = 1.9 V, AVDD = DVDD = 1.15 V, –1-dBFS differential input, and f_{IN} = 190 MHz (unless otherwise noted)

PARAMETER		TEST CONDITIONS	DDC BYPASS MODE MIN	DDC BYPASS MODE TYP	DDC BYPASS MODE MAX	DECIMATE-BY-4 (DDC Mode 2) MIN	DECIMATE-BY-4 (DDC Mode 2) TYP	DECIMATE-BY-4 (DDC Mode 2) MAX	UNIT
SNR	Signal-to-noise ratio	f_{IN} = 10 MHz, A_{IN} = –1 dBFS		69.9			72.2		dBFS
		f_{IN} = 70 MHz, A_{IN} = –1 dBFS		69.6			71.8		
		f_{IN} = 190 MHz, A_{IN} = –1 dBFS		69.2			71.8		
		f_{IN} = 190 MHz, A_{IN} = –3 dBFS	66.5	69.6			71		
		f_{IN} = 300 MHz, A_{IN} = –3 dBFS		69.3			71.7		
		f_{IN} = 370 MHz, A_{IN} = –3 dBFS		68.7			71.3		
		f_{IN} = 470 MHz, A_{IN} = –3 dBFS		68.4			69.8		
NSD	Noise spectral density	f_{IN} = 10 MHz, A_{IN} = –1 dBFS		–153.9			–153.2		dBFS/Hz
		f_{IN} = 70 MHz, A_{IN} = –1 dBFS		–153.6			–152.8		
		f_{IN} = 190 MHz, A_{IN} = –1 dBFS		–153.2			–152.7		
		f_{IN} = 190 MHz, A_{IN} = –3 dBFS	–150.5	–153.6			–153.2		
		f_{IN} = 300 MHz, A_{IN} = –3 dBFS		–152.8			–152.7		
		f_{IN} = 370 MHz, A_{IN} = –3 dBFS		–152.5			–152.2		
		f_{IN} = 470 MHz, A_{IN} = –3 dBFS		–151.5			–151		
SFDR (1)	Spurious-free dynamic range	f_{IN} = 10 MHz, A_{IN} = –1 dBFS		83			83		dBc
		f_{IN} = 70 MHz, A_{IN} = –1 dBFS		81			100		
		f_{IN} = 190 MHz, A_{IN} = –1 dBFS		87			100		
		f_{IN} = 190 MHz, A_{IN} = –3 dBFS	78	88			98		
		f_{IN} = 300 MHz, A_{IN} = –3 dBFS		79			98		
		f_{IN} = 370 MHz, A_{IN} = –3 dBFS, input clock frequency = 983.04 MHz		82			70		
		f_{IN} = 470 MHz, A_{IN} = –3 dBFS		78			76		
SINAD	Signal-to-noise and distortion ratio	f_{IN} = 10 MHz, A_{IN} = –1 dBFS		68.5			70.6		dBFS
		f_{IN} = 70 MHz, A_{IN} = –1 dBFS		68.5			70.6		
		f_{IN} = 190 MHz, A_{IN} = –1 dBFS		68.2			72.2		
		f_{IN} = 190 MHz, A_{IN} = –3 dBFS		68.5			73		
		f_{IN} = 300 MHz, A_{IN} = –3 dBFS		68.9			72.3		
		f_{IN} = 370 MHz, A_{IN} = –3 dBFS		68			68.2		
		f_{IN} = 470 MHz, A_{IN} = –3 dBFS		68			69		

(1) Harmonic distortion performance can be significantly improved by using the frequency planning explained in the *Frequency Planning* section.

Copyright © 2017, Texas Instruments Incorporated

AC Performance (continued)

typical values are at T_A = 25°C, full temperature range is from T_{MIN} = –40°C to T_{MAX} = +100°C, input clock frequency = 1 GHz, 50% clock duty cycle, output sample rate = 500 MSPS, AVDD19 = 1.9 V, AVDD = DVDD = 1.15 V, –1-dBFS differential input, and f_{IN} = 190 MHz (unless otherwise noted)

PARAMETER		TEST CONDITIONS	DDC BYPASS MODE MIN	DDC BYPASS MODE TYP	DDC BYPASS MODE MAX	DECIMATE-BY-4 (DDC Mode 2) MIN	DECIMATE-BY-4 (DDC Mode 2) TYP	DECIMATE-BY-4 (DDC Mode 2) MAX	UNIT
HD2[1]	Second-order harmonic distortion	f_{IN} = 10 MHz, A_{IN} = –1 dBFS		–83			–90		dBc
		f_{IN} = 70 MHz, A_{IN} = –1 dBFS		–82			–100		
		f_{IN} = 190 MHz, A_{IN} = –1 dBFS		–85			–98		
		f_{IN} = 190 MHz, A_{IN} = –3 dBFS	–78	–86			–100		
		f_{IN} = 300 MHz, A_{IN} = –3 dBFS		–82			–100		
		f_{IN} = 370 MHz, A_{IN} = –3 dBFS input clock frequency = 983.04 MHz		–82			–69		
		f_{IN} = 470 MHz, A_{IN} = –3 dBFS		–100			–94		
HD3[1]	Third-order harmonic distortion	f_{IN} = 10 MHz, A_{IN} = –1 dBFS		–83			–85		dBc
		f_{IN} = 70 MHz, A_{IN} = –1 dBFS		–81			–100		
		f_{IN} = 190 MHz, A_{IN} = –1 dBFS		–92			–100		
		f_{IN} = 190 MHz, A_{IN} = –3 dBFS	–78	–92			–100		
		f_{IN} = 300 MHz, A_{IN} = –3 dBFS		–90			–100		
		f_{IN} = 370 MHz, A_{IN} = –3 dBFS		–90			–100		
		f_{IN} = 470 MHz, A_{IN} = –3 dBFS		–80			–79		
Non HD2, HD3	Spurious-free dynamic range (excluding HD2, HD3)	f_{IN} = 10 MHz, A_{IN} = –1 dBFS		95			–100		dBFS
		f_{IN} = 70 MHz, A_{IN} = –1 dBFS		95			–92		
		f_{IN} = 190 MHz, A_{IN} = –1 dBFS		95			–100		
		f_{IN} = 190 MHz, A_{IN} = –3 dBFS	87	95			–98		
		f_{IN} = 300 MHz, A_{IN} = –3 dBFS		95			–100		
		f_{IN} = 370 MHz, A_{IN} = –3 dBFS		95			–100		
		f_{IN} = 470 MHz, A_{IN} = –3 dBFS		93			–100		
THD[1]	Total harmonic distortion	f_{IN} = 10 MHz, A_{IN} = –1 dBFS		–81			–83		dBc
		f_{IN} = 70 MHz, A_{IN} = –1 dBFS		–79			–100		
		f_{IN} = 190 MHz, A_{IN} = –1 dBFS		–83			–100		
		f_{IN} = 190 MHz, A_{IN} = –3 dBFS		–85			–100		
		f_{IN} = 300 MHz, A_{IN} = –3 dBFS		–81			–100		
		f_{IN} = 370 MHz, A_{IN} = –3 dBFS		–76			–68		
		f_{IN} = 470 MHz, A_{IN} = –3 dBFS		–82			–80		
IMD3	Two-tone, third-order intermodulation distortion	f_1 = 185 MHz, f_2 = 190 MHz, A_{IN} = –10 dBFS		–90			–87		dBFS
		f_1 = 365 MHz, f_2 = 370 MHz, A_{IN} = –10 dBFS		–90			–94		
		f_1 = 465 MHz, f_2 = 470 MHz, A_{IN} = –10 dBFS		–85			–85		

Copyright © 2017, Texas Instruments Incorporated

6.7 Digital Characteristics

typical values are at T_A = 25°C, full temperature range is from T_{MIN} = –40°C to T_{MAX} = +100°C, input clock frequency = 1 GHz, 50% clock duty cycle, output sample rate = 500 MSPS, AVDD19 = 1.9 V, AVDD = DVDD = 1.15 V, –1-dBFS differential input, and f_{IN} = 190 MHz (unless otherwise noted)

PARAMETER		TEST CONDITIONS	MIN	TYP	MAX	UNIT
DIGITAL INPUTS (RESET, SCLK, SEN, SDIN, PDN, TRIGAB, TRIGCD)(1)						
V_{IH}	High-level input voltage	All digital inputs support 1.2-V and 1.8-V logic levels	0.8			V
V_{IL}	Low-level input voltage	All digital inputs support 1.2-V and 1.8-V logic levels			0.4	V
I_{IH}	High-level input current	SEN		0		µA
		RESET, SCLK, SDIN, PDN, TRIGAB, TRIGCD		50		
I_{IL}	Low-level input current	SEN		50		µA
		RESET, SCLK, SDIN, PDN, TRIGAB, TRIGCD		0		
	Input capacitance			4		pF
DIGITAL INPUTS						
V_D	Differential input voltage	SYSREFP, SYSREFM	0.35	0.45	0.55	V
		SYNCbABM, SYNCbABP, SYNCbCDM, SYNCbCDP	0.35	0.45	0.8	
$V_{(CM_DIG)}$	Common-mode voltage for SYSREF	SYSREFP, SYSREFM	0.9	1.2	1.4	V
		SYNCbABM, SYNCbABP, SYNCbCDM, SYNCbCDP	0.9	1.2	1.4	
DIGITAL OUTPUTS (SDOUT, TRDYAB, TRDYCD)						
V_{OH}	High-level output voltage	100-µA current	AVDD19 – 0.2			V
V_{OL}	Low-level output voltage	100-µA current			0.2	V
DIGITAL OUTPUTS (JESD204B Interface: DxP, DxM)(2)						
V_{OD}	Output differential voltage	With default swing setting		700		mV_{PP}
V_{OC}	Output common-mode voltage			450		mV
	Transmitter short-circuit current	Transmitter pins shorted to any voltage between –0.25 V and 1.45 V	–100		100	mA
z_{os}	Single-ended output impedance			50		Ω
	Output capacitance	Output capacitance inside the device, from either output to ground		2		pF

(1) The RESET, SCLK, SDIN, and PDN pins have a 10-kΩ (typical) internal pulldown resistor to ground, and the SEN pin has a 10-kΩ (typical) pullup resistor to DVDD.
(2) 50-Ω, single-ended external termination to DVDD.

Copyright © 2017, Texas Instruments Incorporated

6.8 Timing Characteristics

typical values are at T_A = 25°C, full temperature range is from T_{MIN} = –40°C to T_{MAX} = +100°C, input clock frequency = 1 GHz, 50% clock duty cycle, output sample rate = 500 MSPS, AVDD19 = 1.9 V, AVDD = DVDD = 1.15 V, –1-dBFS differential input, and f_{IN} = 190 MHz (unless otherwise noted)

			MIN	TYP	MAX	UNITS
SAMPLE TIMING CHARACTERISTICS						
	Aperture delay		0.55		0.92	ns
	Aperture delay matching between two channels on the same device			±100		ps
	Aperture delay matching between two devices at the same temperature and supply voltage			±100		ps
	Aperture jitter			100		f_S rms
	Wake-up time	Global power-down		10		ms
		Pin power-down (fast power-down)		5		µs
	Data latency: ADC sample to digital output	DDC bypass mode		116		Input clock cycles
		DDC mode 0		204		
t_{SU_SYSREF}	Setup time for SYSREF, referenced to input clock rising edge		350		900	ps
t_{H_SYSREF}	Hold time for SYSREF, referenced to input clock rising edge		100			ps
JESD OUTPUT INTERFACE TIMING CHARACTERISTICS						
	Unit interval		100			ps
	Serial output data rate				10	Gbps
	Total jitter for BER of 1E-15 and lane rate = 10 Gbps			24		ps
	Random jitter for BER of 1E-15 and lane rate = 10 Gbps			0.95		ps rms
	Deterministic jitter for BER of 1E-15 and lane rate = 10 Gbps			8.8		ps, pk-pk
t_R, t_F	Data rise time, data fall time: rise and fall times measured from 20% to 80%, differential output waveform, 2.5 Gbps ≤ bit rate ≤ 10 Gbps			35		ps

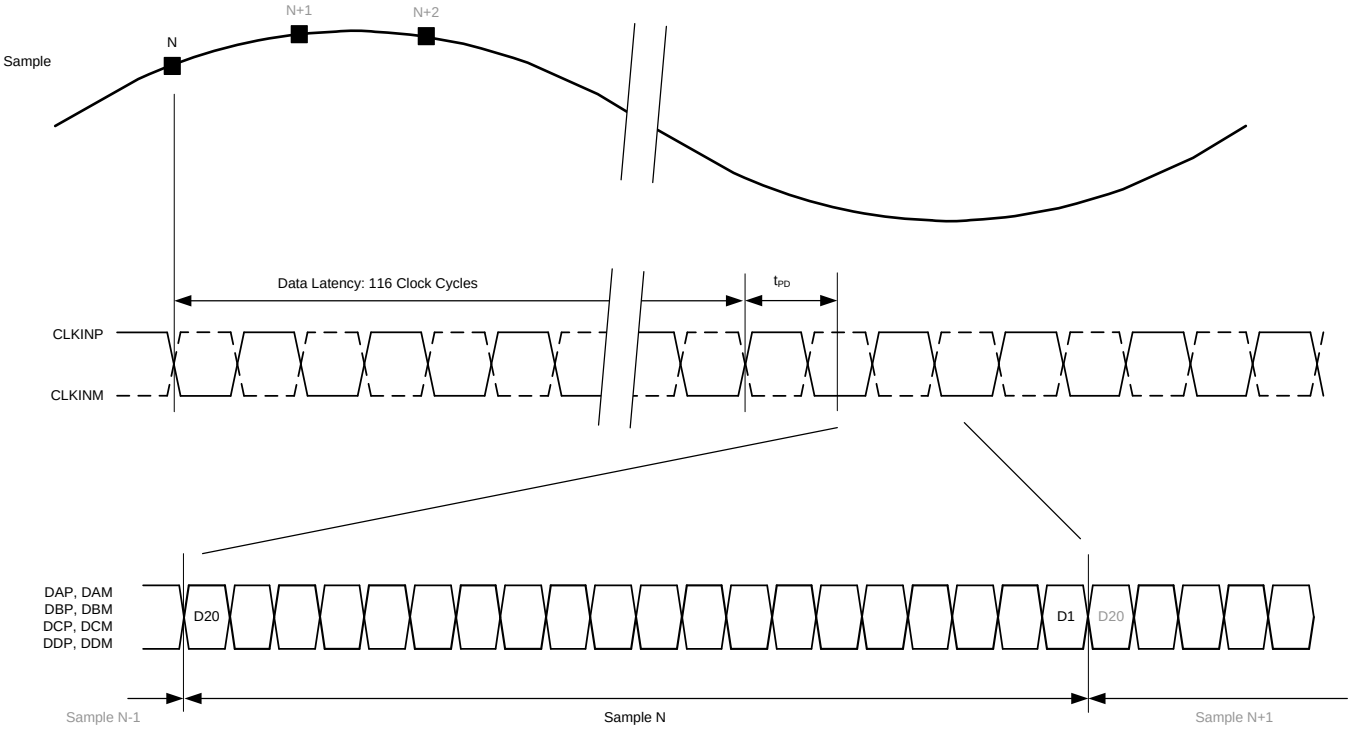

Figure 1. Latency Timing Diagram in DDC Bypass Mode

6.9 Typical Characteristics: DDC Bypass Mode

typical values are at T_A = 25°C, full temperature range is from T_{MIN} = –40°C to T_{MAX} = +100°C, device sampling frequency = 1 GSPS, 50% clock duty cycle, output sample rate = 500 MSPS, AVDD19 = 1.9 V, AVDD = DVDD = 1.15 V, –1-dBFS differential input, and f_{IN} = 190 MHz (unless otherwise noted)

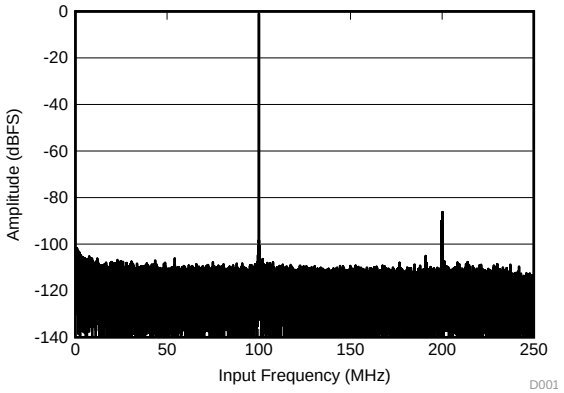

f_{IN} = 100 MHz, A_{IN} = –1 dBFS, SNR = 69.57 dBFS, SFDR = 85.23 dBc, SFDR = 102.09 dBc (non 23)

Figure 2. FFT for 100-MHz Input Signal

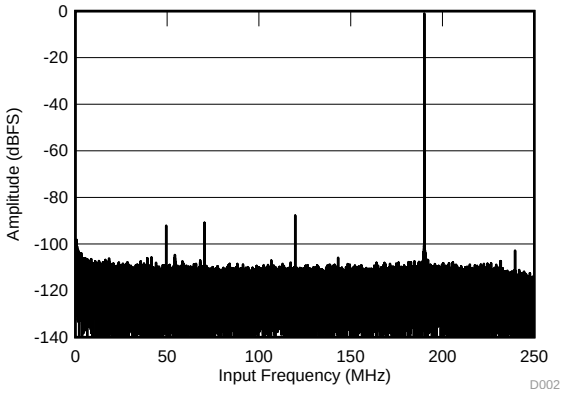

f_{IN} = 190 MHz, A_{IN} = –1 dBFS, SNR = 69.23 dBFS, SFDR = 86.83 dBc, SFDR = 91.23 dBc (non 23)

Figure 3. FFT for 190-MHz Input Signal

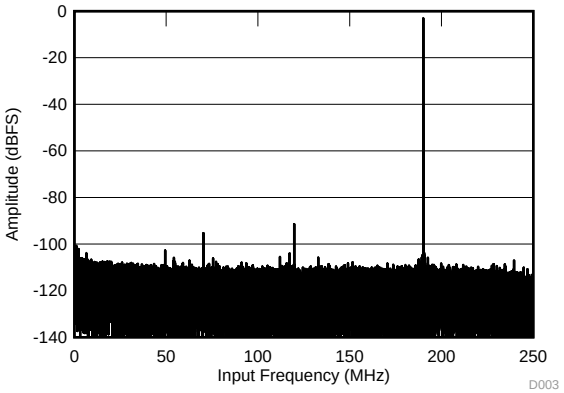

f_{IN} = 190 MHz, A_{IN} = –3 dBFS, SNR = 69.60 dBFS, SFDR = 88.45 dBc, SFDR = 99.78 dBc (non 23)

Figure 4. FFT for 190-MHz Input Signal

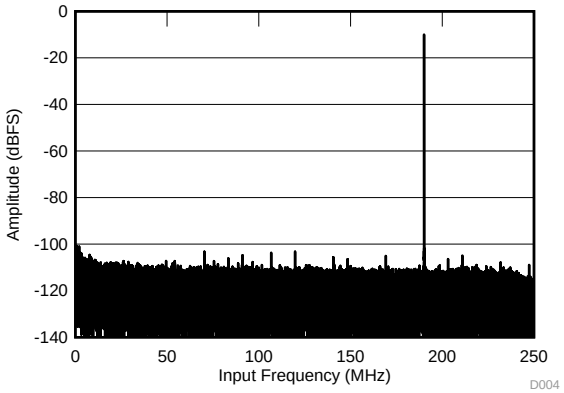

f_{IN} = 190 MHz, A_{IN} = –10 dBFS, SNR = 70.05 dBFS, SFDR = 93.27 dBc, SFDR = 97.26 dBc (non 23)

Figure 5. FFT for 190-MHz Input Signal

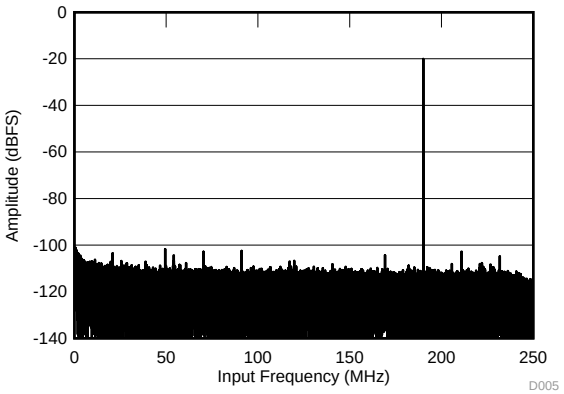

f_{IN} = 190 MHz, A_{IN} = –20 dBFS, SNR = 70.23 dBFS, SFDR = 81.71 dBc, SFDR = 81.71 dBc (non 23)

Figure 6. FFT for 190-MHz Input Signal

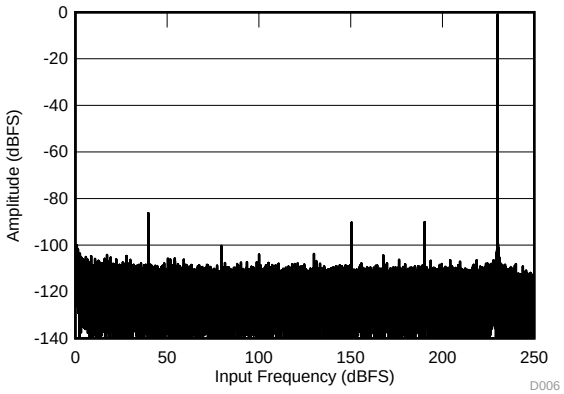

f_{IN} = 230 MHz, A_{IN} = –1 dBFS, SNR = 69.17 dBFS, SFDR = 85.29 dBc, SFDR = 89.30 dBc (non 23)

Figure 7. FFT for 230-MHz Input Signal

Copyright © 2017, Texas Instruments Incorporated

Typical Characteristics: DDC Bypass Mode (continued)

typical values are at T_A = 25°C, full temperature range is from T_{MIN} = –40°C to T_{MAX} = +100°C, device sampling frequency = 1 GSPS, 50% clock duty cycle, output sample rate = 500 MSPS, AVDD19 = 1.9 V, AVDD = DVDD = 1.15 V, –1-dBFS differential input, and f_{IN} = 190 MHz (unless otherwise noted)

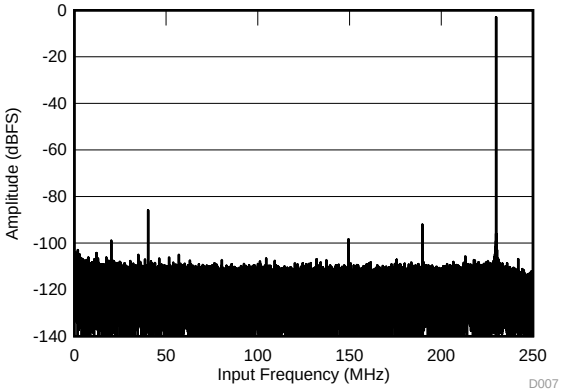

f_{IN} = 270 MHz, A_{IN} = –3 dBFS, SNR = 69.27 dBFS, SFDR = 82.98 dBc, SFDR = 95.4 dBc (non 23)

Figure 8. FFT for 270-MHz Input Signal

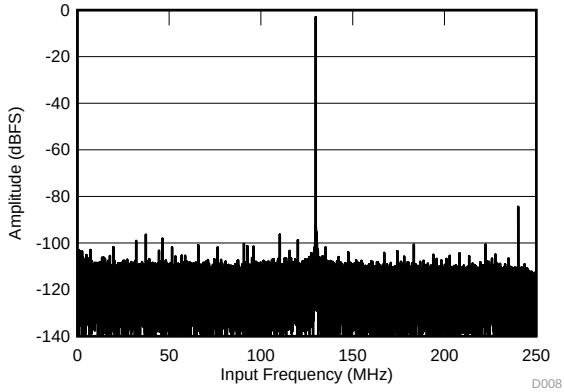

f_{IN} = 370 MHz, A_{IN} = –3 dBFS, SNR = 68.36 dBFS, SFDR = 81.37 dBc, SFDR = 97.28 dBc (non 23)

Figure 9. FFT for 370-MHz Input Signal

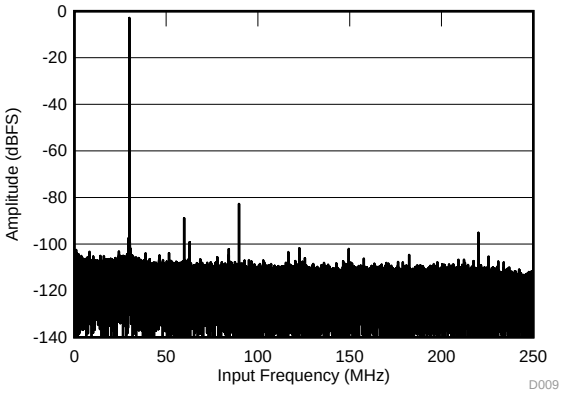

f_{IN} = 470 MHz, A_{IN} = –3 dBFS, SNR = 68.21 dBFS, SFDR = 79.85 dBc, SFDR = 99.12 dBc (non 23)

Figure 10. FFT for 470-MHz Input Signal

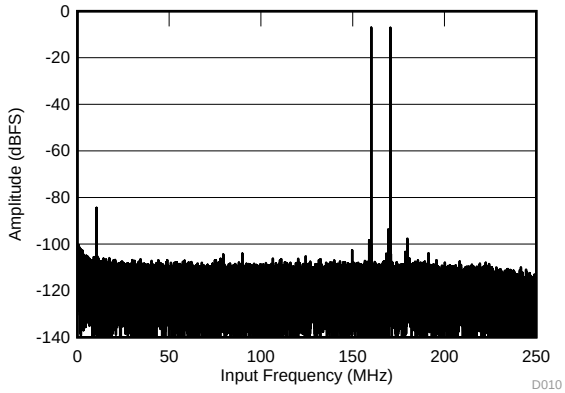

f_{IN1} = 160 MHz, f_{IN2} = 170 MHz, IMD = 102.68 dBFS, each tone at –7 dBFS

Figure 11. FFT for Two-Tone Input Signal

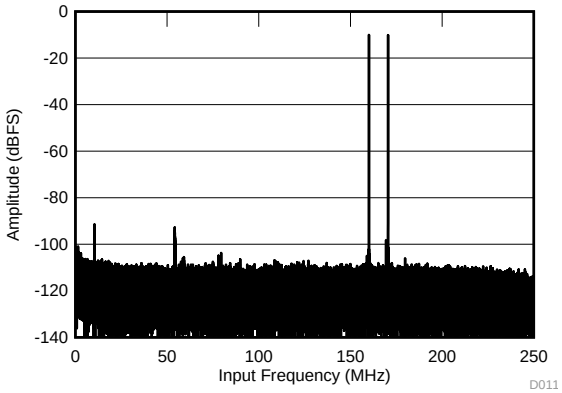

f_{IN1} = 160 MHz, f_{IN2} = 170 MHz, IMD = 103.44 dBFS, each tone at –10 dBFS

Figure 12. FFT for Two-Tone Input Signal

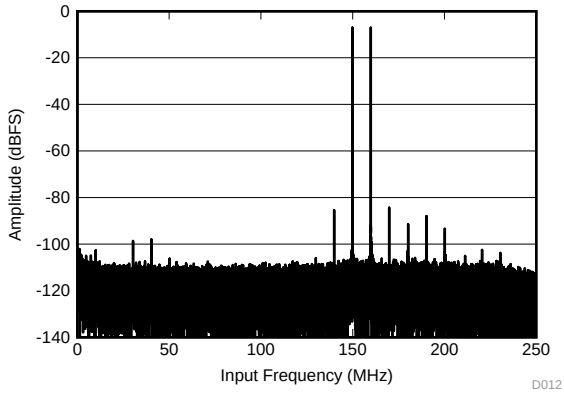

f_{IN1} = 340 MHz, f_{IN2} = 350 MHz, IMD = 84.34 dBFS, each tone at –7 dBFS

Figure 13. FFT for Two-Tone Input Signal

Copyright © 2017, Texas Instruments Incorporated

Typical Characteristics: DDC Bypass Mode (continued)

typical values are at T_A = 25°C, full temperature range is from T_{MIN} = –40°C to T_{MAX} = +100°C, device sampling frequency = 1 GSPS, 50% clock duty cycle, output sample rate = 500 MSPS, AVDD19 = 1.9 V, AVDD = DVDD = 1.15 V, –1-dBFS differential input, and f_{IN} = 190 MHz (unless otherwise noted)

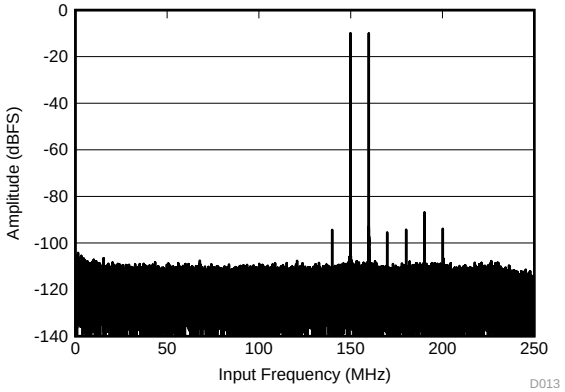

f_{IN1} = 340 MHz, f_{IN2} = 350 MHz, IMD = 95.08 dBFS, each tone at –10 dBFS

Figure 14. FFT for Two-Tone Input Signal

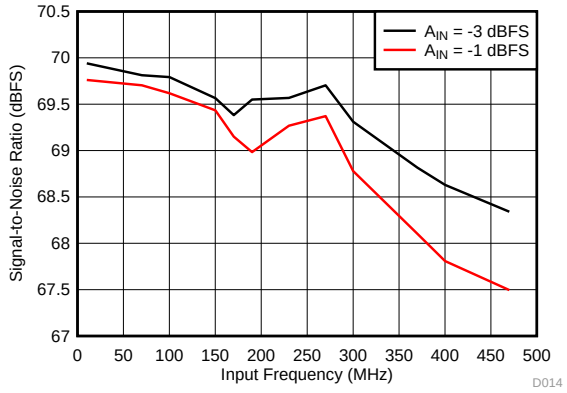

Figure 15. SNR vs Input Frequency

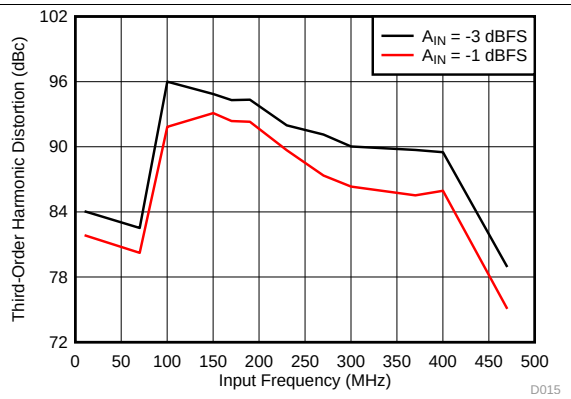

Figure 16. HD3 vs Input Frequency

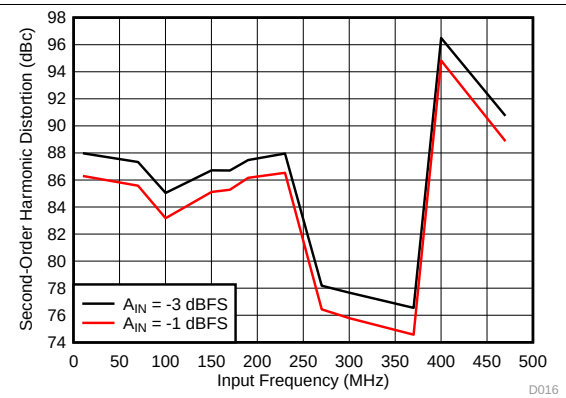

Figure 17. HD2 vs Input Frequency

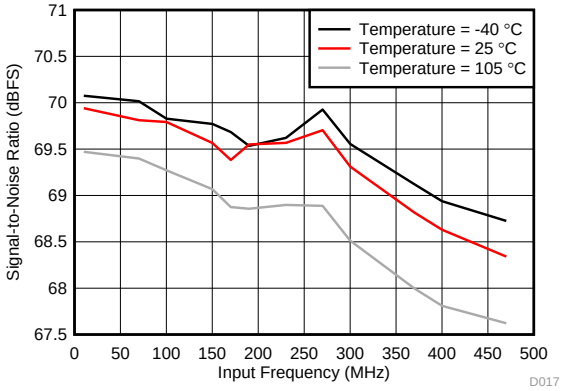

Figure 18. SNR vs Input Frequency and Temperature

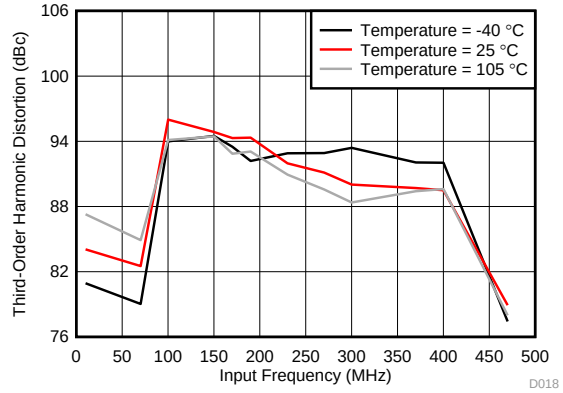

Figure 19. HD3 vs Input Frequency and Temperature

Copyright © 2017, Texas Instruments Incorporated

Typical Characteristics: DDC Bypass Mode (continued)

typical values are at T_A = 25°C, full temperature range is from T_{MIN} = –40°C to T_{MAX} = +100°C, device sampling frequency = 1 GSPS, 50% clock duty cycle, output sample rate = 500 MSPS, AVDD19 = 1.9 V, AVDD = DVDD = 1.15 V, –1-dBFS differential input, and f_{IN} = 190 MHz (unless otherwise noted)

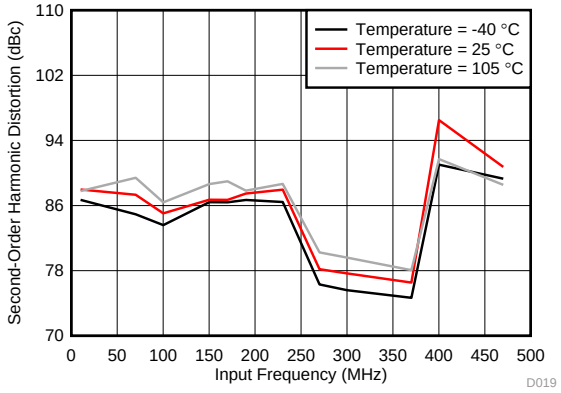

Figure 20. HD2 vs Input Frequency and Temperature

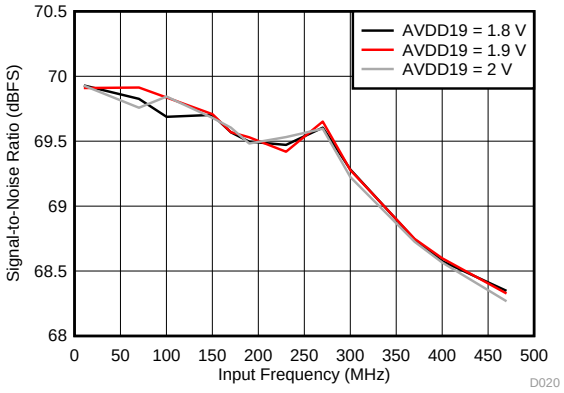

Figure 21. SNR vs Input Frequency and AVDD19 Supply

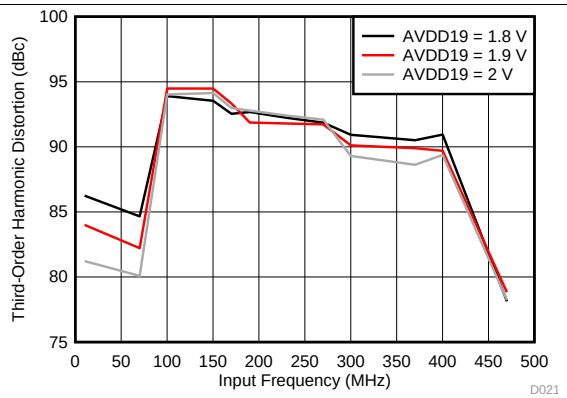

Figure 22. HD3 vs Input Frequency and AVDD19 Supply

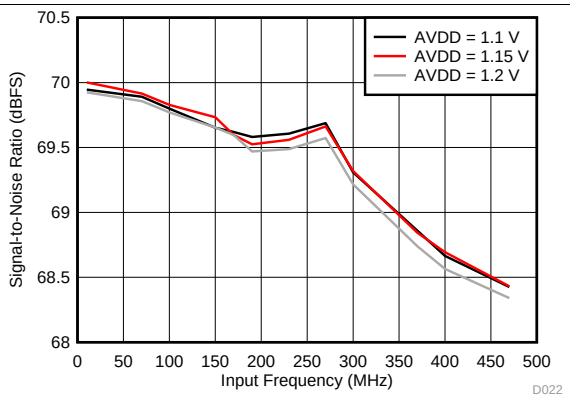

Figure 23. SNR vs Input Frequency and AVDD Supply

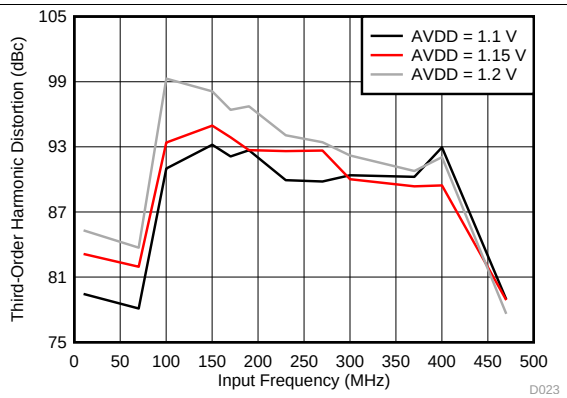

Figure 24. HD3 vs Input Frequency and AVDD Supply

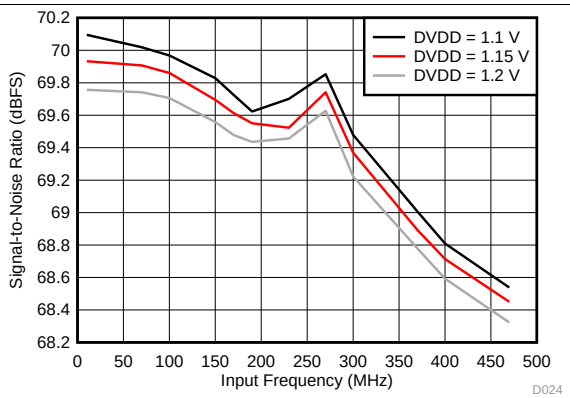

Figure 25. SNR vs Input Frequency and DVDD Supply

Copyright © 2017, Texas Instruments Incorporated

Typical Characteristics: DDC Bypass Mode (continued)

typical values are at T_A = 25°C, full temperature range is from T_{MIN} = –40°C to T_{MAX} = +100°C, device sampling frequency = 1 GSPS, 50% clock duty cycle, output sample rate = 500 MSPS, AVDD19 = 1.9 V, AVDD = DVDD = 1.15 V, –1-dBFS differential input, and f_{IN} = 190 MHz (unless otherwise noted)

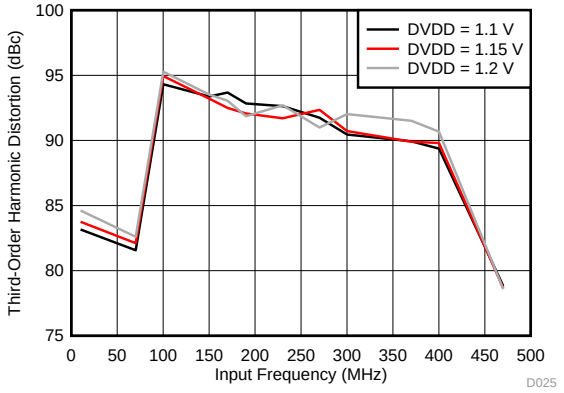

Figure 26. HD3 vs Input Frequency and DVDD Supply

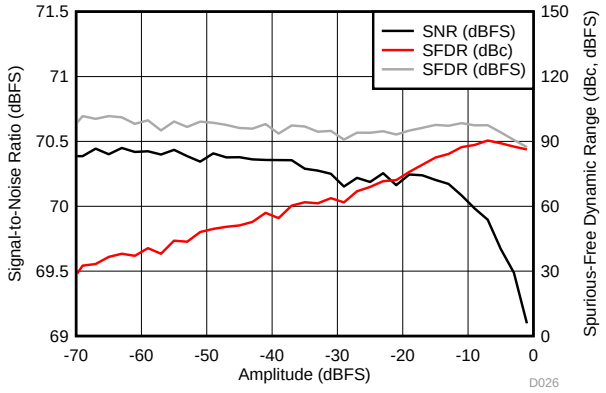

f_{IN} = 190 MHz

Figure 27. Performance vs Input Signal Amplitude

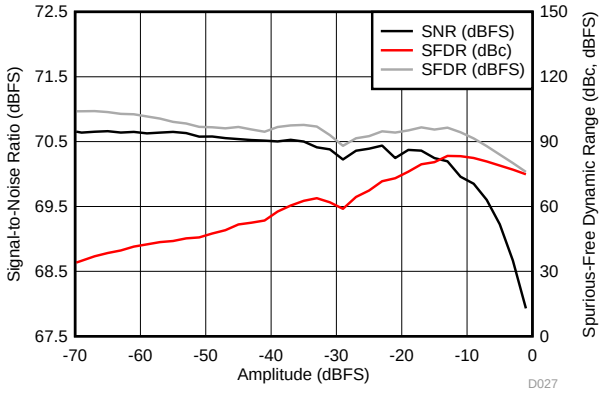

f_{IN} = 370 MHz

Figure 28. Performance vs Input Signal Amplitude

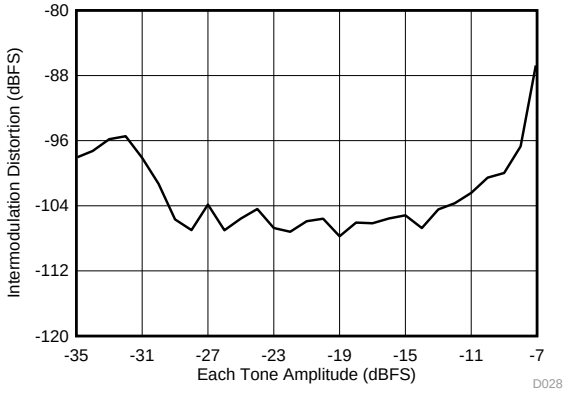

f_{IN1} = 160 MHz, f_{IN2} = 170 MHz

Figure 29. IMD vs Input Amplitude

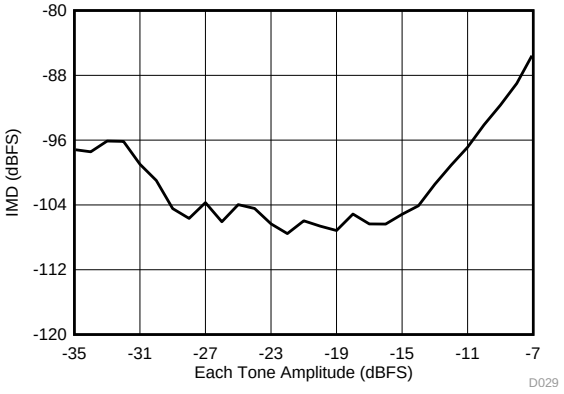

f_{IN1} = 340 MHz, f_{IN2} = 350 MHz

Figure 30. IMD vs Input Amplitude

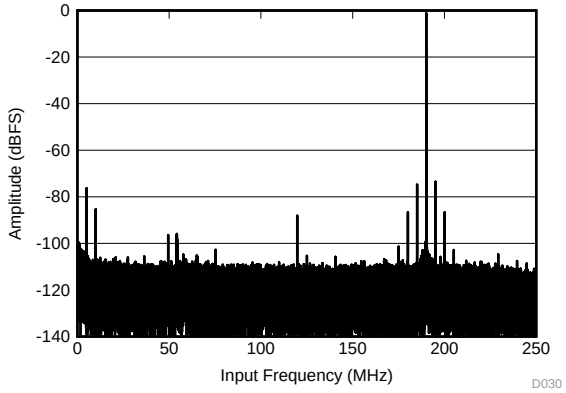

f_{IN} = 190 MHz, A_{IN} = –1 dBFS, f_{Noise} = 5 MHz, A_{Noise} = 50 mV_{PP}, SFDR = 73.5 dBFS

Figure 31. Power-Supply Rejection Ratio FFT for 50-mV Noise on AVDD Supply

Copyright © 2017, Texas Instruments Incorporated

Typical Characteristics: DDC Bypass Mode (continued)

typical values are at T_A = 25°C, full temperature range is from T_{MIN} = –40°C to T_{MAX} = +100°C, device sampling frequency = 1 GSPS, 50% clock duty cycle, output sample rate = 500 MSPS, AVDD19 = 1.9 V, AVDD = DVDD = 1.15 V, –1-dBFS differential input, and f_{IN} = 190 MHz (unless otherwise noted)

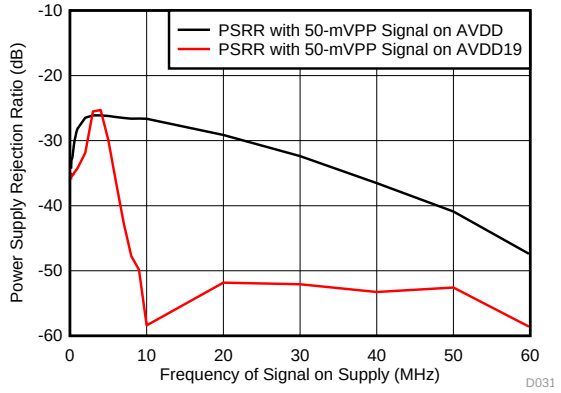

f_{IN} = 190 MHz, A_{IN} = –1 dBFS, f_{Noise} = 5 MHz, A_{Noise} = 50 mV_{PP}

Figure 32. PSRR vs Power-Supply Noise Frequency

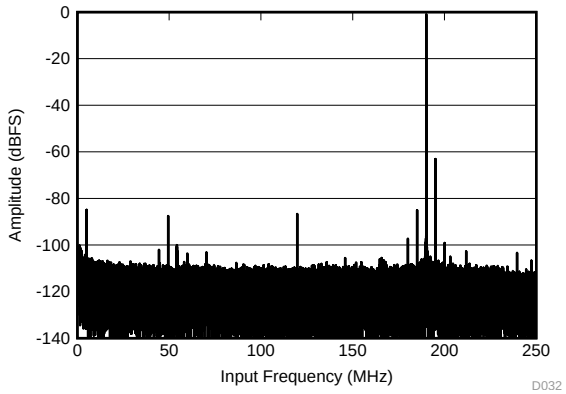

f_{IN} = 190 MHz, A_{IN} = –1 dBFS, f_{Noise} = 5 MHz, A_{Noise} = 50 mV_{PP}, SFDR = 63.12 dBFS

Figure 33. Common-Mode Rejection Ratio FFT

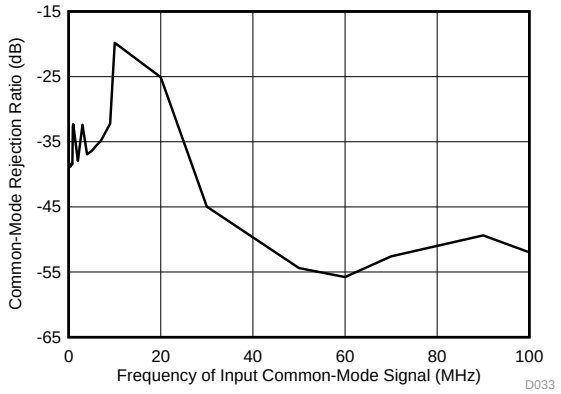

f_{IN} = 190 MHz, A_{IN} = –1 dBFS, f_{Noise} = 5 MHz, A_{Noise} = 50 mV_{PP}

Figure 34. CMRR vs Common-Mode Noise Frequency

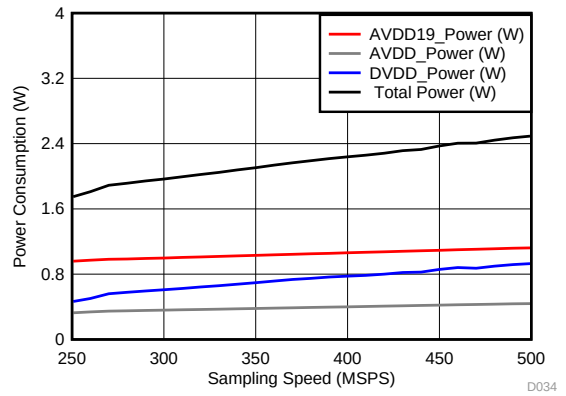

Figure 35. Power Consumption vs Sampling Speed

6.10 Typical Characteristics: Mode 2

typical values are at T_A = 25°C, full temperature range is from T_{MIN} = –40°C to T_{MAX} = +100°C, device sampling frequency = 1 GSPS, 50% clock duty cycle, AVDD19 = 1.9 V, AVDD = DVDD = 1.15 V, –1-dBFS differential input, and f_{IN} = 190 MHz (unless otherwise noted)

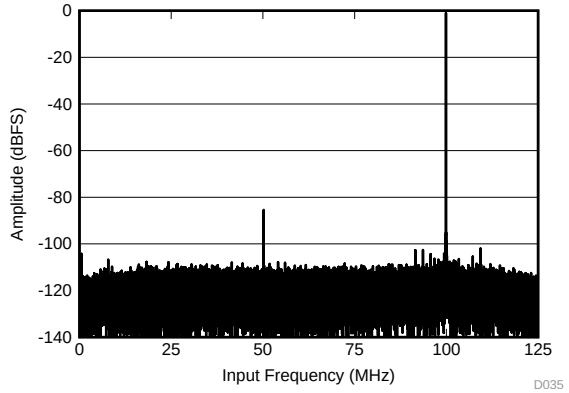

f_{IN} = 150 MHz, A_{IN}= –1 dBFS, SNR = 72.85 dBFS, SFDR = 84.41 dBc, SFDR = 100.99 dBc (non 23)

Figure 36. FFT for 150-MHz Input Signal

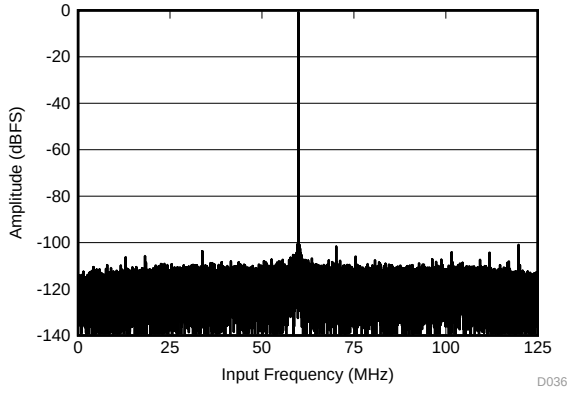

f_{IN} = 190 MHz, A_{IN}= –1 dBFS, SNR = 72.37 dBFS, SFDR = 99.95 dBc, SFDR = 100.76 dBc (non 23)

Figure 37. FFT for 190-MHz Input Signal

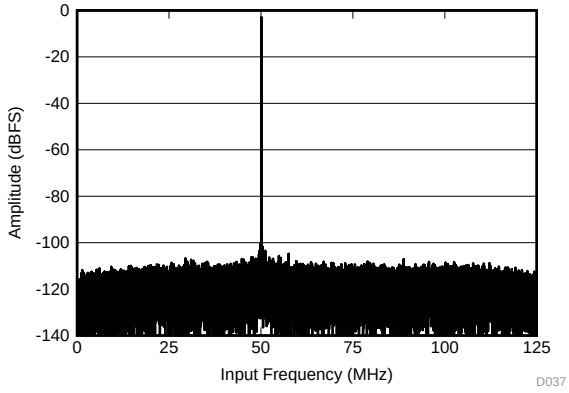

f_{IN} = 300 MHz, A_{IN}= –3 dBFS, SNR = 72.3 dBFS, SFDR = 100.31 dBc, SFDR = 100.75 dBc (non 23)

Figure 38. FFT for 300-MHz Input Signal

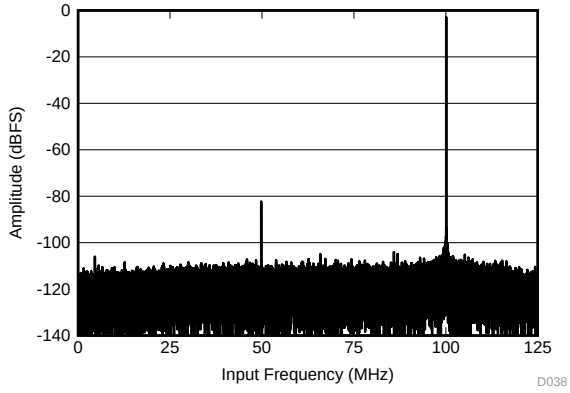

f_{IN} = 350 MHz, A_{IN}= –3 dBFS, SNR = 72.02 dBFS, SFDR = 79.23 dBc, SFDR = 96.42 dBc (non 23)

Figure 39. FFT for 350-MHz Input Signal

Copyright © 2017, Texas Instruments Incorporated

6.11 Typical Characteristics: Mode 0

typical values are at T_A = 25°C, full temperature range is from T_{MIN} = –40°C to T_{MAX} = +100°C, device sampling frequency = 1 GSPS, 50% clock duty cycle, AVDD19 = 1.9 V, AVDD = DVDD = 1.15 V, –1-dBFS differential input, and f_{IN} = 190 MHz (unless otherwise noted)

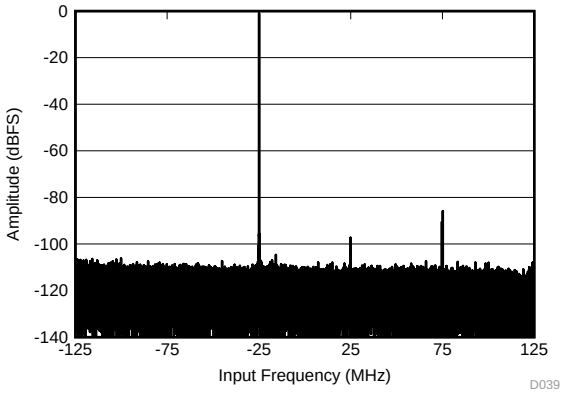

f_{IN} = 100 MHz, A_{IN}= –1 dBFS, SNR = 70.16 dBFS, SFDR = 84.95 dBc, SFDR = 95.41 dBc (non 23)

Figure 40. FFT for 100-MHz Input Signal

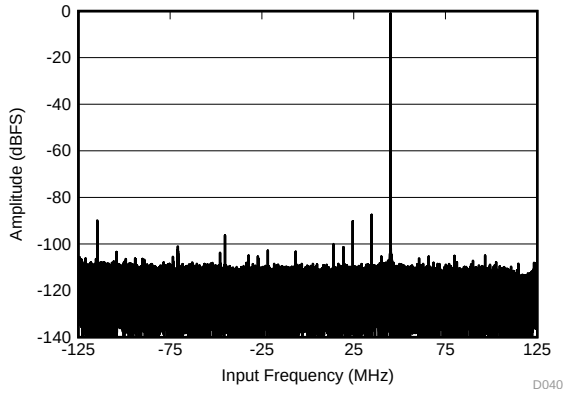

f_{IN} = 170 MHz, A_{IN}= –1 dBFS, SNR = 69.35 dBFS, SFDR = 86.46 dBc, SFDR = 89.27 dBc (non 23)

Figure 41. FFT for 170-MHz Input Signal

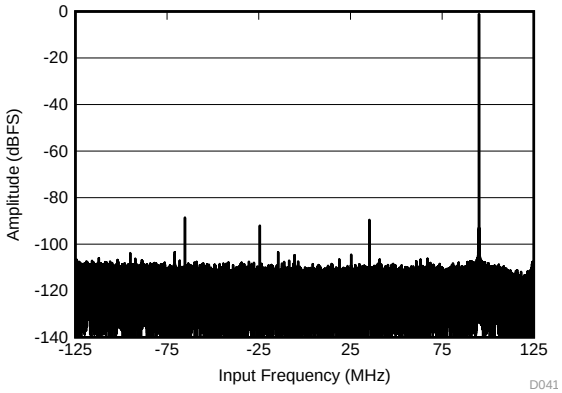

f_{IN} = 220 MHz, A_{IN}= –1 dBFS, SNR = 69.27 dBFS, SFDR = 87.66 dBc, SFDR = 91.04 dBc (non 23)

Figure 42. FFT for 220-MHz Input Signal

6.12 Typical Characteristics: Dual ADC Mode

typical values are at T_A = 25°C, full temperature range is from T_{MIN} = –40°C to T_{MAX} = +100°C, device sampling frequency = 1 GSPS, 50% clock duty cycle, AVDD19 = 1.9 V, AVDD = DVDD = 1.15 V, –1-dBFS differential input, and f_{IN} = 190 MHz (unless otherwise noted)

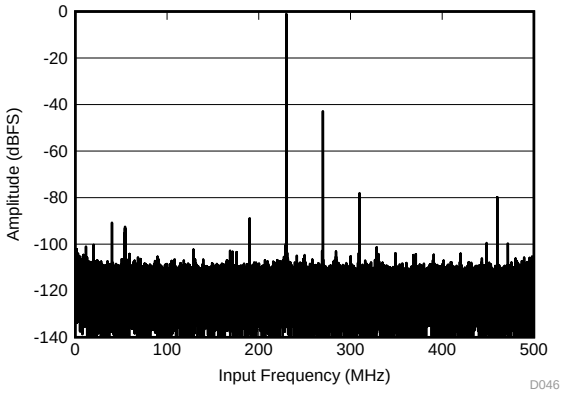

f_{IN} = 230 MHz, A_{IN}= –1 dBFS, SNR = 68.11 dBFS, SFDR = 77.01 dBc, interleaving spur = –42.85 dBFS

Figure 43. FFT for 230-MHz Input Signal

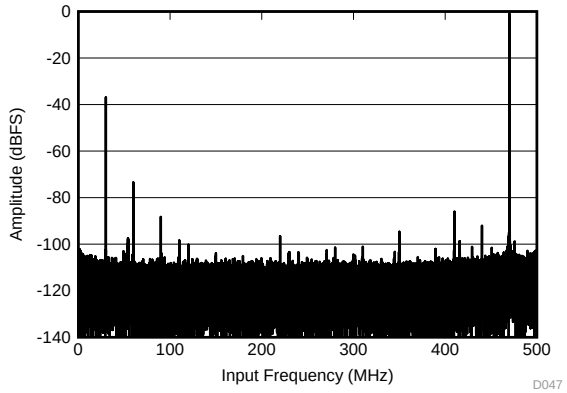

f_{IN} = 470 MHz, A_{IN}= –1 dBFS, SNR = 66.56 dBFS, SFDR = 72.32 dBc, interleaving spur = –36.96 dBFS

Figure 44. FFT for 470-MHz Input Signal

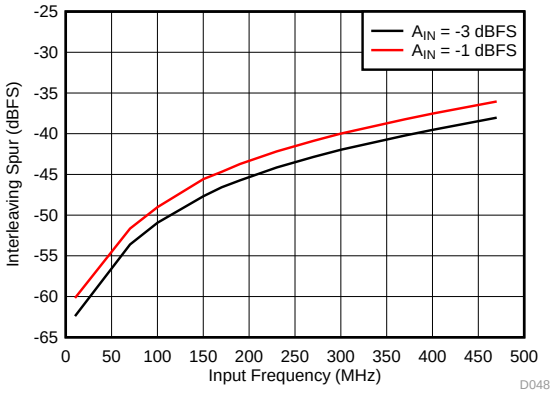

Figure 45. Interleaving Spur vs Input Frequency

Copyright © 2017, Texas Instruments Incorporated

7 Detailed Description

7.1 Overview

The ADS54J64 is a quad-channel device with a complex digital down-converter (DDC) and digital decimation to allow flexible signal processing to suit different usage cases. Each channel is composed of two interleaved analog-to-digital converters (ADCs) sampling at half the input clock rate. The 2x interleaved data are decimated by 2 to provide a processing gain of 3 dB. The decimation filter has a programmable option to be configured as low pass (default) or high pass. In default mode, the device operates in DDC mode 0, where the input is mixed with a constant frequency of $-f_S / 4$ and transmitted as complex IQ. In DDC bypass mode (mode 8), the DDC is bypassed and the 2x decimated data are available on the JESD output. The different operational modes of the ADS54J64 are listed in Table 1.

The ADS54J64 can also be operated in a dual-channel interleaved mode (dual mode), in which two channels are averaged and the 2x interleaved and averaged data are available directly at the JESD output.

7.2 Functional Block Diagram

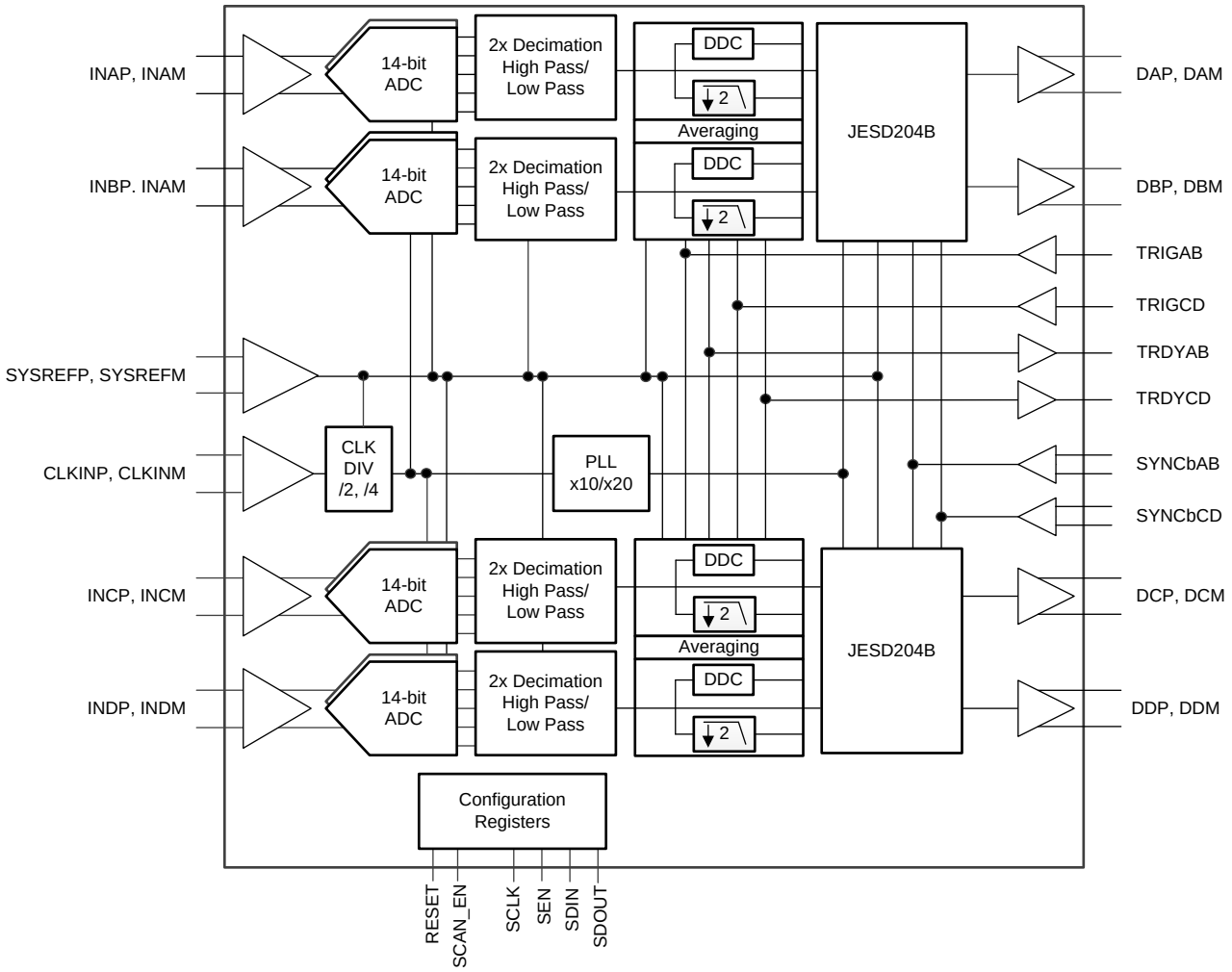

Copyright © 2017, Texas Instruments Incorporated

7.3 Feature Description

7.3.1 Analog Inputs

The ADS54J64 analog signal inputs are designed to be driven differentially. The analog input pins have internal analog buffers that drive the sampling circuit. As a result of the analog buffer, the input pins present a high-impedance input across a very wide frequency range to the external driving source that enables great flexibility in the external analog filter design as well as excellent 50-Ω matching for RF applications. The buffer also helps isolate the external driving circuit from the internal switching currents of the sampling circuit, resulting in a more constant SFDR performance across input frequencies. The common-mode voltage of the signal inputs is internally biased to 1.3 V using 2-kΩ resistors to allow for ac-coupling of the input drive network. Each input pin (INP, INM) must swing symmetrically between (V_{CM} + 0.275 V) and (V_{CM} – 0.275 V), resulting in a 1.1-V_{PP} (default) differential input swing. The input sampling circuit has a 3-dB bandwidth that extends up to 1000 MHz.

7.3.2 Recommended Input Circuit

In order to achieve optimum ac performance, the following circuitry (shown in Figure 46) is recommended at the analog inputs.

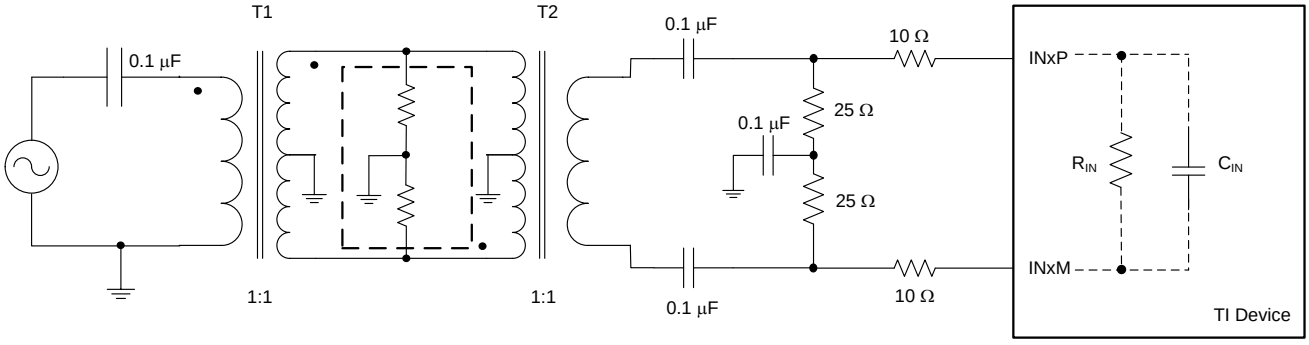

Copyright © 2017, Texas Instruments Incorporated

Figure 46. Analog Input Driving Circuit

7.3.3 Clock Input

The clock inputs of the ADS54J64 supports LVDS and LVPECL standards. The CLKP, CLKM inputs have an internal termination of 100 Ω. The clock inputs must be ac-coupled, as shown in Figure 47 and Figure 48, because the input pins are self-biased to a common-mode voltage of 0.7 V.

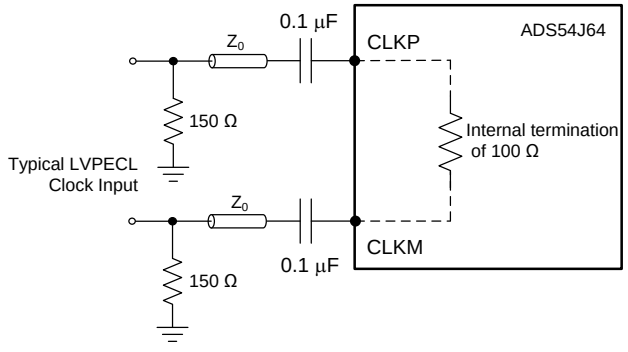

Copyright © 2017, Texas Instruments Incorporated

Figure 47. LVPECL Clock Driving Circuit

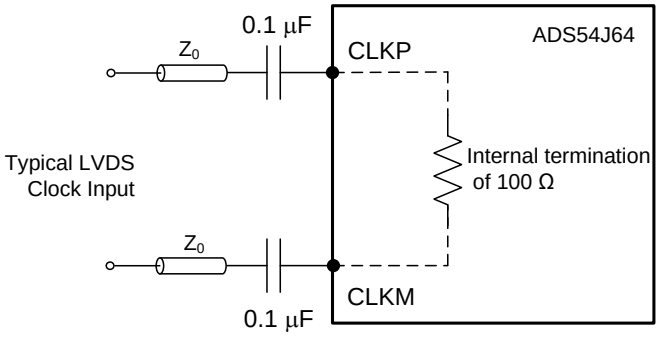

Copyright © 2017, Texas Instruments Incorporated

Figure 48. LVDS Clock Driving Circuit

7.4 Device Functional Modes

7.4.1 Digital Functions

Figure 49 shows the various operational modes available in the ADS54J64. In quad mode, the maximum output rate is half the sampling rate. The 2x interleaved data are filtered using a half-band filter (HBF) that can be configured as a low-pass or high-pass filter using register writes. In dual mode, the device can be operated at a full sampling rate with 2x interleaving and averaging of two channels.

Quad mode supports a maximum complex and a real bandwidth of 200 MHz. The HBF output can be brought directly on the JESD lines at half rate. The complex data are obtained through a digital down-converter (DDC) that is comprised of a 16-bit numerically controlled oscillator (NCO) and a 100-MHz or 200-MHz filter. The DDC also has a real output mode where the data are decimated by 2 and mixed to f_{OUT} / 4 to support a bandwidth of 100 MHz. In addition to the DDC modes, the HBF output can be decimated by 2 to obtain an overall decimation by 4 on the 2x interleaved data.

Dual mode supports a maximum sampling rate of 1 GSPS. The 2x interleaved data from channel A and channel B (and likewise channels C and D) can be averaged and given on the JESD lanes.

Table 1 lists all modes of operation with the maximum bandwidth provided at a sample rate of 491.52 MSPS and 368.64 MSPS.

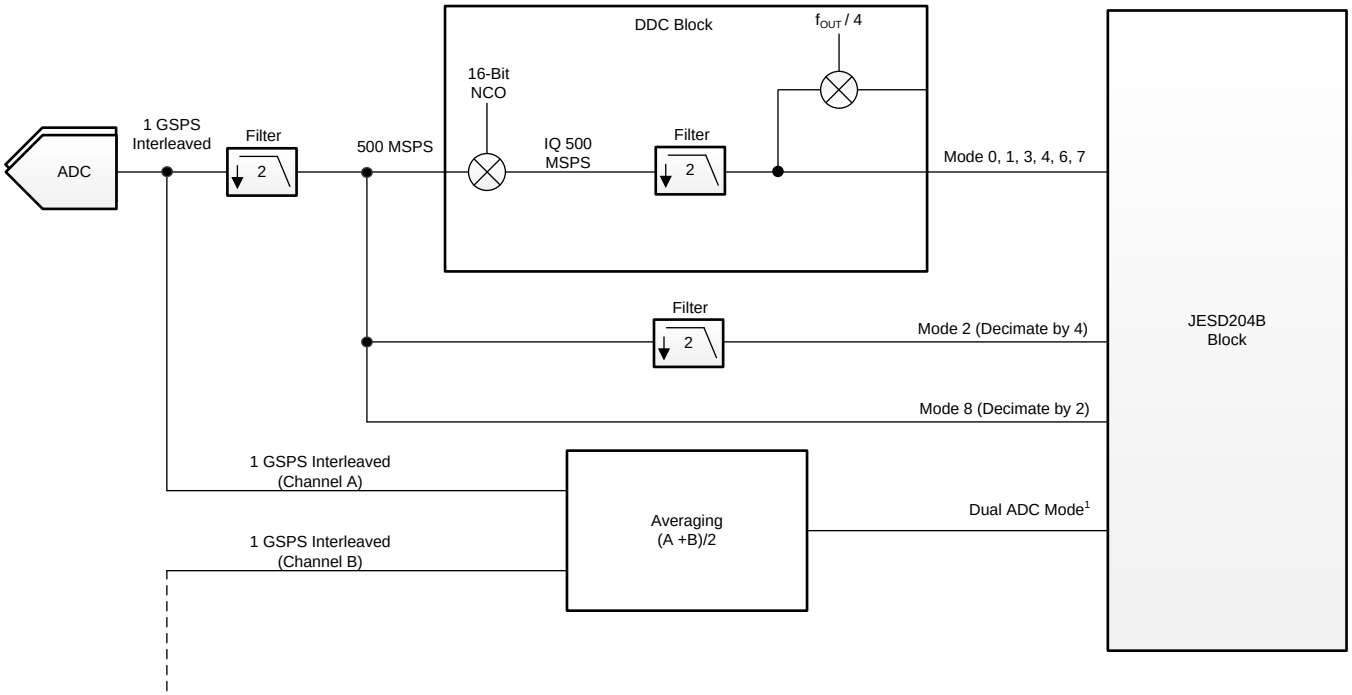

Copyright © 2017, Texas Instruments Incorporated

(1) 1-GSPS data are transmitted using two JESD lanes.

Figure 49. ADS54J64 Channel Operating Modes

Device Functional Modes (continued)

Table 1. ADS54J64 Operating Modes

OPERATING MODE	DESCRIPTION	1ST-STAGE DECIMATION	DIGITAL MIXER	2ND-STAGE DECIMATION	BANDWIDTH AT 491.52 MSPS	BANDWIDTH AT 368.64 MSPS	OUTPUT MIXER	OUTPUT FORMAT	MAX OUTPUT RATE
0	Decimation	2	$\pm f_S$ / 4	2	200 MHz	150 MHz	—	Complex	250 MSPS
1		2	16-bit NCO	2	200 MHz	150 MHz	—	Complex	250 MSPS
2		2	—	2	100 MHz (LP, LP or HP, HP), 75 MHz (HP, LP or LP, HP)	75 MHz, 56.25 MHz	—	Real	250 MSPS
3		2	16-bit NCO	Bypass	200 MHz	150 MHz	f_{OUT} / 4	Real	500 MSPS
4		2	16-bit NCO	2	100 MHz	75 MHz	f_{OUT} / 4	Real	250 MSPS
5		Reserved	Reserved	Reserved	Reserved	Reserved	Reserved	Reserved	Reserved
6		2	16-bit NCO	4	100 MHz	75 MHz	—	Complex	125 MSPS
7		2	16-bit NCO	2	100 MHz	75 MHz	f_{OUT} / 4	Real with zero insertion	500 MSPS
8	DDC bypass mode	2	—	—	223 MHz	167 MHz	—	Real	500 MSPS
8	Dual ADC mode	—	—	—	—	—	—	—	1000 MSPS

7.4.1.1 Numerically Controlled Oscillators (NCOs) and Mixers

The ADS54J64 is equipped with a complex numerically-controlled oscillator. The oscillator generates a complex exponential sequence: $x[n] = e^{j\omega n}$. The frequency (ω) is specified by the 16-bit register setting. The complex exponential sequence is multiplied by the real input from the ADC to mix the desired carrier down to 0 Hz.

The NCO frequency setting is set by the 16-bit register value, NCO_FREQ[n]:

$$f_{NCO} = \frac{\text{NCO Frequency [n]} \times f_S}{2^{16}} \quad (1)$$

7.4.1.2 Decimation Filter

The ADS54J64 has two decimation filters (decimate-by-2) in the data path. The first stage of the decimation filter is non-programmable and is used in all functional modes. The second stage of decimation, available in DDC mode 2 and 6, can be used to obtain noise and linearity improvement for low bandwidth applications.

7.4.1.2.1 Stage-1 Filter

The first-stage filter is used for decimation of the 2x interleaved data from f_{CLK} to f_{CLK} / 2. Figure 50 and Figure 51 show the frequency response and pass-band ripple of the first-stage decimation filter, respectively.

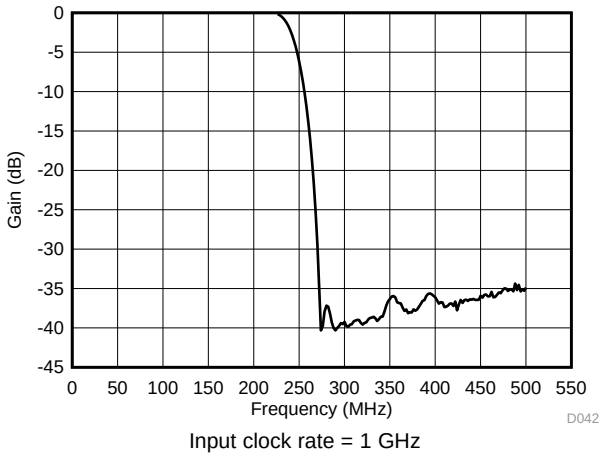

Input clock rate = 1 GHz

Figure 50. Decimation Filter Response vs Frequency

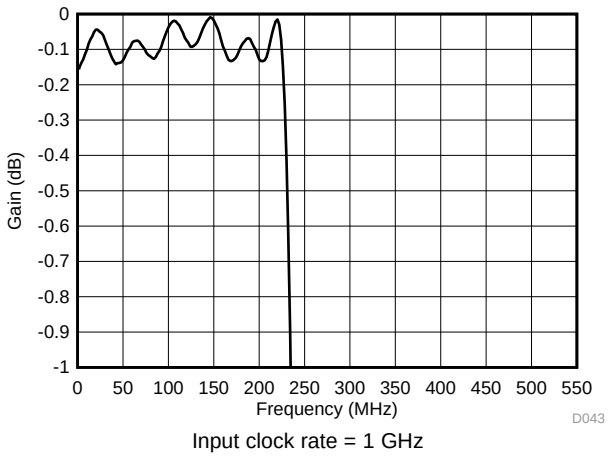

Input clock rate = 1 GHz

Figure 51. Decimation Filter Pass-Band Ripple vs Frequency

Copyright © 2017, Texas Instruments Incorporated

7.4.1.2.2 Stage-2 Filter

The second-stage filter is used for decimating the data from a sample rate of f_{CLK} / 2 to f_{CLK} / 4. Figure 52 and Figure 53 show the frequency response and pass-band ripple of the second-stage filter, respectively.

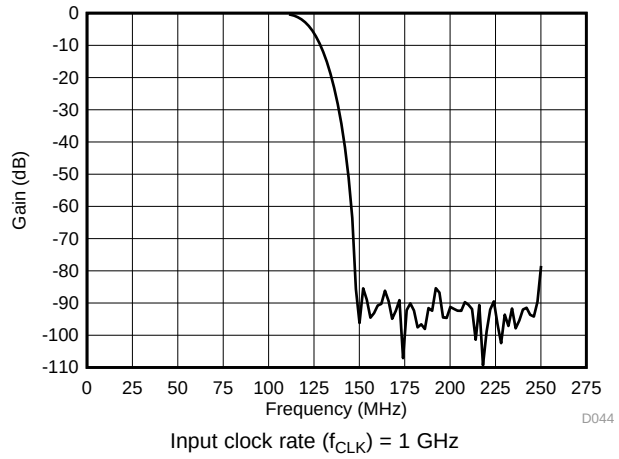

Figure 52. Decimation Filter Response vs Frequency

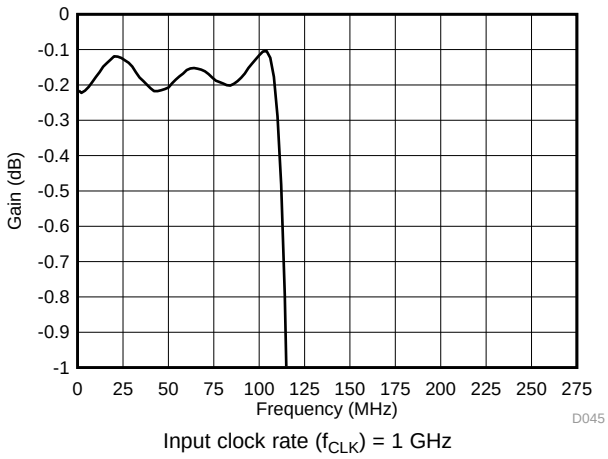

Figure 53. Decimation Filter Pass-Band Ripple vs Frequency

7.4.1.3 Mode 0: Decimate-by-4 With IQ Outputs and f_S / 4 Mixer

In mode 0, the DDC block includes a fixed frequency ±f_S / 4 complex digital mixer preceding the second-stage decimation filters. Figure 54 shows that the IQ pass band is approximately ±100 MHz centered at f_S / 8 or 3f_S / 8.

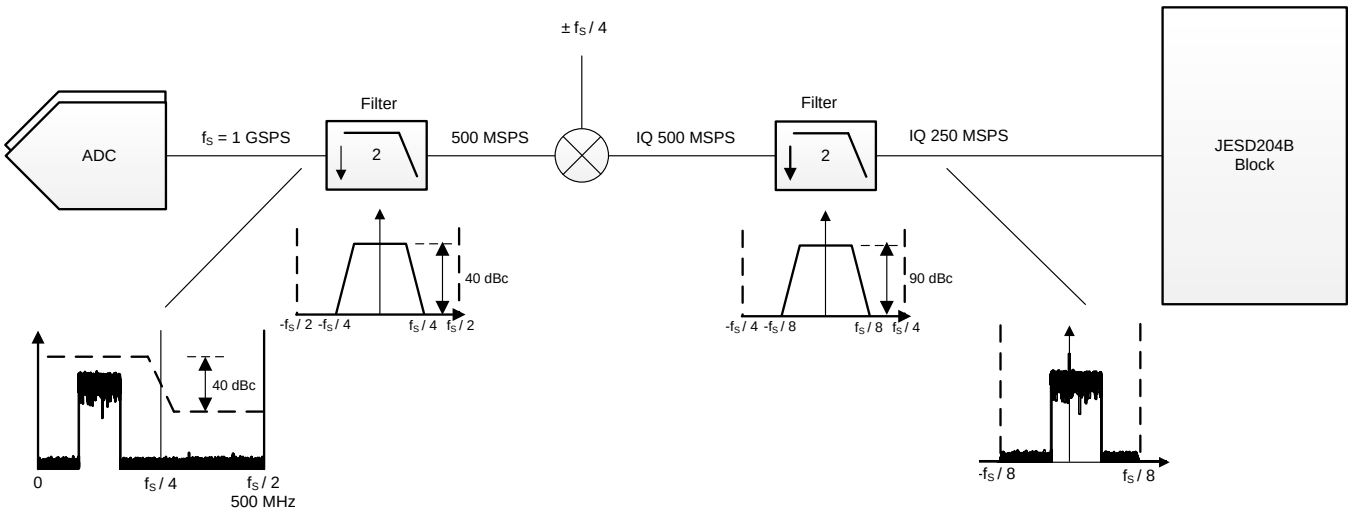

Figure 54. Operating Mode 0

7.4.1.4 Mode 1: Decimate-by-4 With IQ Outputs and 16-Bit NCO

In mode 1, the DDC block includes a 16-bit frequency resolution complex digital mixer, as shown in Figure 55, preceding the second-stage decimation filters.

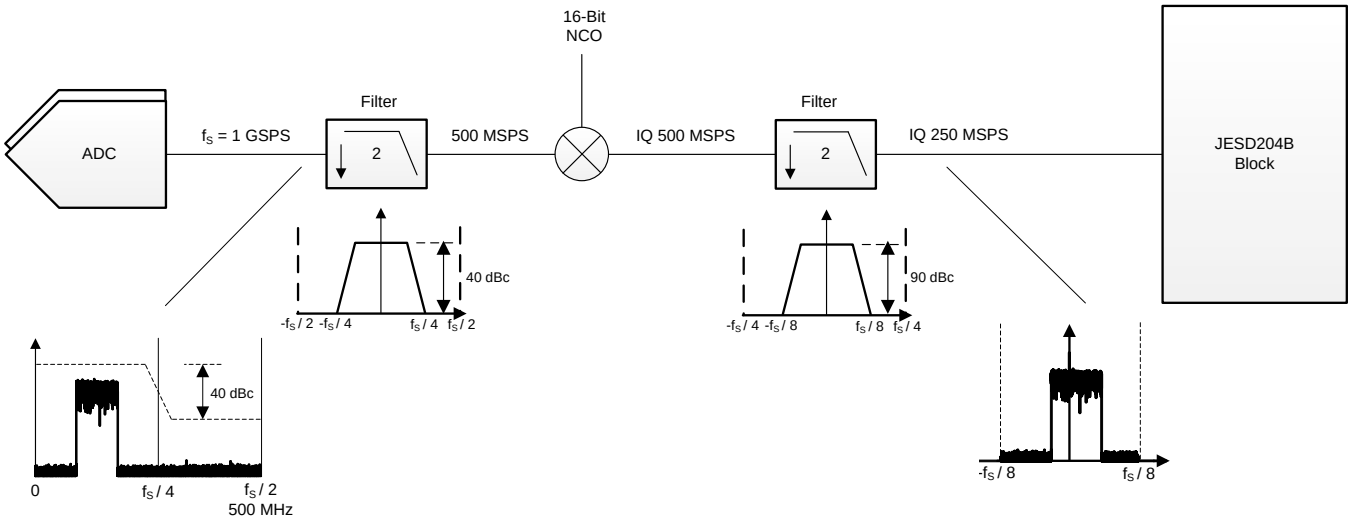

Figure 55. Operating Mode 1

7.4.1.5 Mode 2: Decimate-by-4 With Real Output

In mode 2, the DDC block cascades two decimate-by-2 filters. Each filter can be configured as low pass (LP) or high pass (HP), as shown in Table 2, to allow down conversion of different frequency ranges. Figure 56 shows that the LP, HP and HP, LP output spectra are inverted.

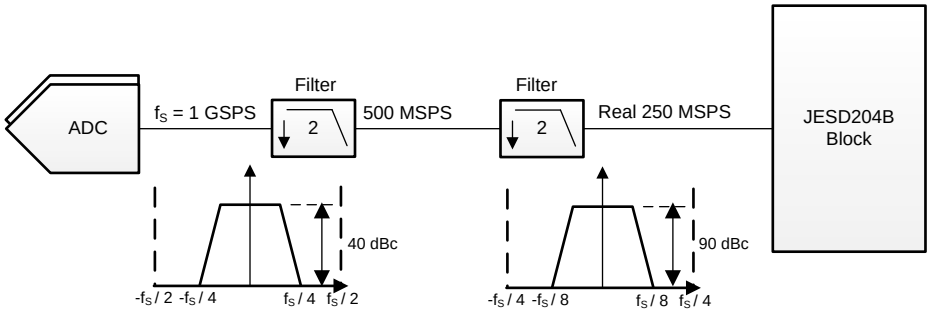

Figure 56. Operating in Mode 2

Table 2. ADS54J64 Operating Mode 2, Down-Converted Frequency Ranges

1ST-STAGE FILTER	2ND-STAGE FILTER	FREQUENCY RANGE WITH CLOCK RATE OF 983.04 MHz	BANDWIDTH WITH CLOCK RATE OF 983.04 MHz	FREQUENCY RANGE WITH CLOCK RATE OF 737.28 MHz	BANDWIDTH WITH CLOCK RATE OF 737.28 MHz
LP	LP	0 MHz–100 MHz	100 MHz	0 MHz–75 MHz	75 MHz
LP	HP	150 MHz–223 MHz	73 MHz	112.5 MHz–167.25 MHz	54.75 MHz
HP	LP	268.52 MHz–341.52 MHz	73 MHz	201.39 MHz–256.14 MHz	54.75 MHz
HP	HP	391.52 MHz–491.52 MHz	100 MHz	293.64 MHz–368.64 MHz	75 MHz

Copyright © 2017, Texas Instruments Incorporated

7.4.1.6 Mode 3: Decimate-by-2 Real Output With Frequency Shift

In mode 3, the DDC block includes a 16-bit complex NCO digital mixer followed by a f_S / 4 mixer with a real output to center the band at f_S / 4. As shown in Figure 57, the NCO must be set to a value different from ±f_S / 4, or else the samples are zeroed.

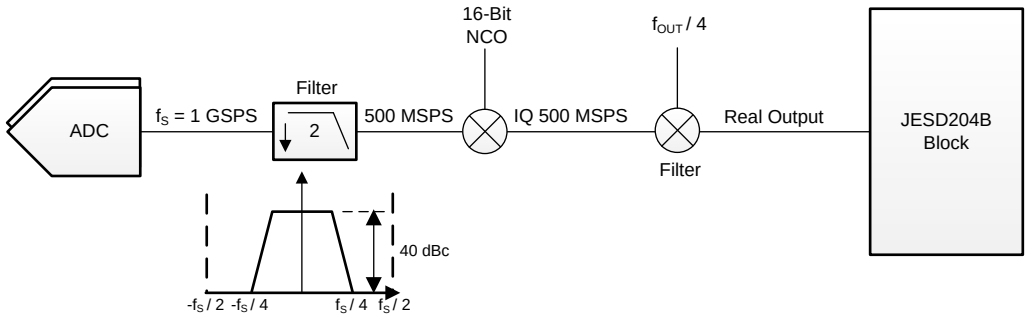

Figure 57. Operating Mode 3

7.4.1.7 Mode 4: Decimate-by-4 With Real Output

In mode 4, the DDC block includes a 16-bit complex NCO digital mixer preceding the second-stage decimation filter. As shown in Figure 58, the signal is then mixed with f_{OUT} / 4 to generate a real output. The bandwidth available in this mode is 100 MHz.

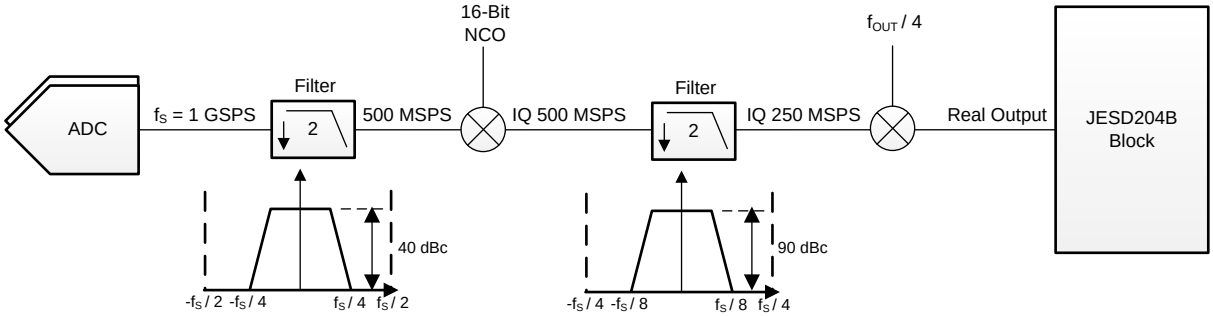

Figure 58. Operating Mode 4

Copyright © 2017, Texas Instruments Incorporated

7.4.1.8 Mode 6: Decimate-by-4 With IQ Outputs for Up to 110 MHz of IQ Bandwidth

In mode 6, the DDC block shown in Figure 59 includes a 16-bit complex NCO digital mixer preceding a second-stage filter with a decimate-by-4 complex, generating a complex output at f_S / 8.

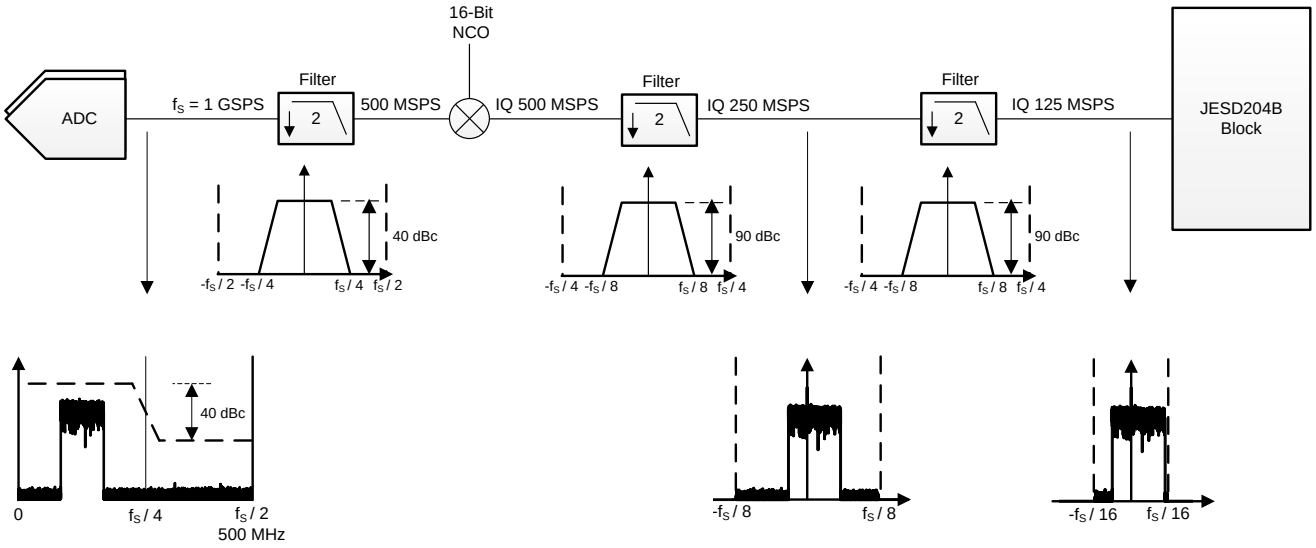

Figure 59. Operating Mode 6

7.4.1.9 Mode 7: Decimate-by-4 With Real Output and Zero Stuffing

In mode 7, the DDC block includes a 16-bit complex NCO digital mixer preceding the second-stage decimation filter. The signal is then mixed with f_{OUT} / 4, as shown in Figure 60, to generate a real output that is then doubled in sample rate by zero-stuffing every other sample. The bandwidth available in this mode is 100 MHz.

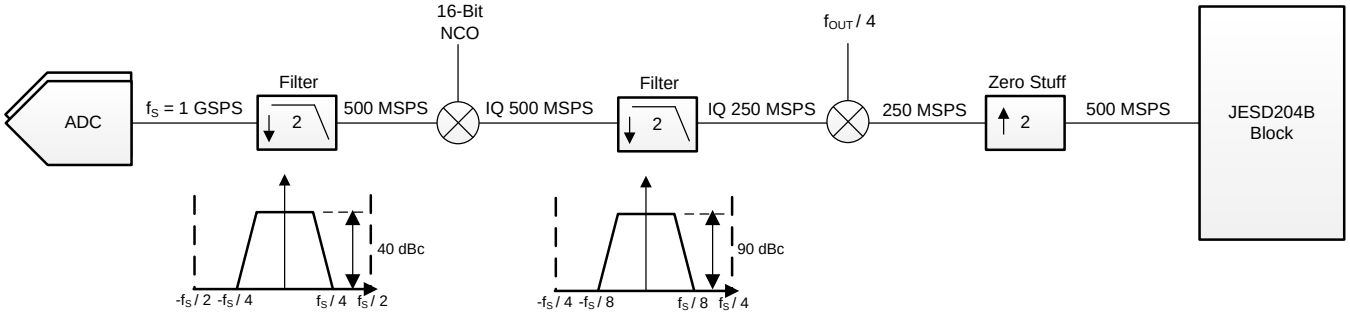

Figure 60. Operating Mode 7

Copyright © 2017, Texas Instruments Incorporated

7.4.1.10 Mode 8: DDC Bypass Mode

In mode 8, the DDC block is bypassed as shown in Figure 61 and the 2x decimated data are available on the JESD output. The decimation filter can be configured to be high pass or low pass using an SPI register bit. The stop-band attenuation is approximately 40 dB and the available bandwidth is 225 MHz. The decimation filter response is illustrated in Figure 50 and Figure 51.

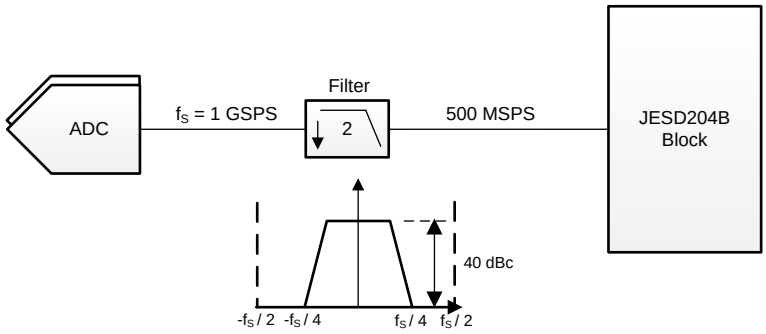

Copyright © 2017, Texas Instruments Incorporated

Figure 61. Operating Mode 8

7.4.1.11 Averaging Mode

In dual ADC mode, two channels (channels A, B and C, D) are averaged and given out as a single output. As a result, the device operates in a dual-channel mode with 2x interleaved sample rate. For a 1-GSPS input clock, the averaged output at 1 GSPS is available on two JESD lanes, each operating at 10 Gbps. Figure 62 shows the device supporting an averaging of channels A and B. An identical averaging path is available for channels C and D. Configure the device in mode 8 before enabling dual ADC mode through SPI register writes.

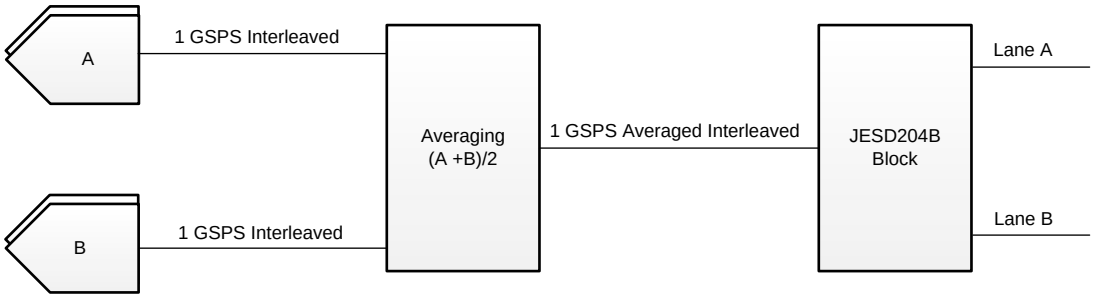

Copyright © 2017, Texas Instruments Incorporated

Figure 62. Averaging Mode for Channels A and B (C and D Averaging is Identical)

7.4.1.12 Overrange Indication

The ADS54J64 provides a fast overrange indication that can be presented in the digital output data stream via SPI configuration. When the FOVR indication is embedded in the output data stream as shown in Figure 63, this indication replaces the LSB (D0) of the 16 bits going to the 8b, 10b encode.

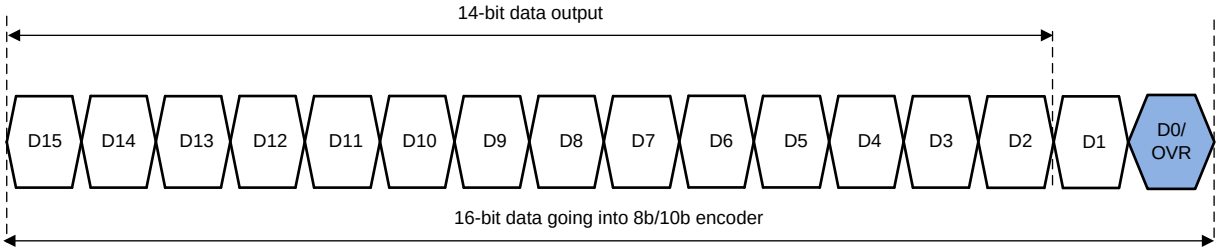

Figure 63. FOVR Timing Diagram

The fast overrange feature of the ADS54J64 is configured using an upper (FOVR Hi) and a lower (FOVR Lo) 8-bit threshold that are compared against the partial ADC output of the initial pipeline stages. Figure 64 shows the FOVR high and FOVR low thresholds.

The two thresholds are configured via the SPI register where a setting of 136 maps to the maximum ADC code for a high FOVR, and a setting of 8 maps to the minimum ADC code for a low FOVR.

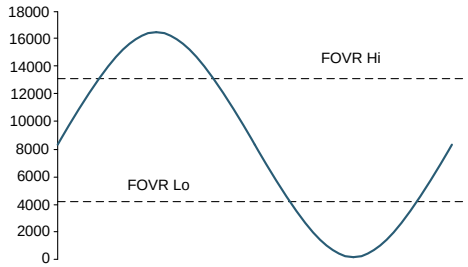

Figure 64. FOVR High and FOVR Low Thresholds

Equation 2 calculates the FOVR threshold from a full-scale input based on the ADC code:

$$\text{FOVR (dBFS)} = 20\log\left|\frac{\text{FOVR High or FOVR Low} - 72}{64}\right| \quad (2)$$

Therefore, a threshold of –0.5 dBFS from full-scale can be set with:

- FOVR high = 132 (27h, 84h)
- FOVR low = 12 (28h, 0Ch)

Copyright © 2017, Texas Instruments Incorporated

7.5 Programming

7.5.1 JESD204B Interface

The ADS54J64 supports device subclass 1 with a maximum output data rate of 10 Gbps for each serial transmitter.

Figure 65 shows that an external SYSREF signal is used to align all internal clock phases and the local multi-frame clock to a specific sampling clock edge. A common SYSREF signal allows synchronization of multiple devices in a system and minimizes timing and alignment uncertainty. The ADS54J64 supports single (for all four JESD links) or dual (for channels A, B and C, D) SYNCb inputs and can be configured via the SPI.

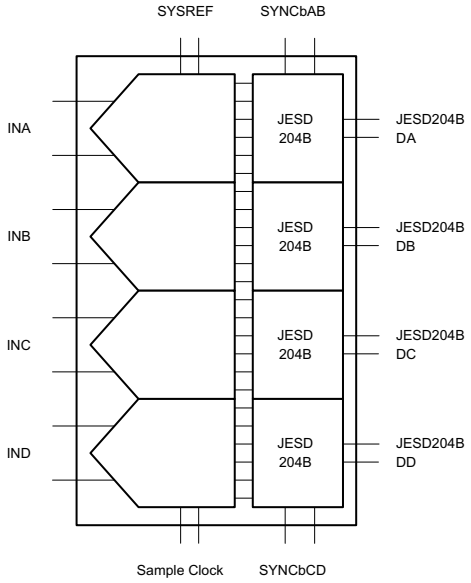

Figure 65. JESD204B Transmitter Block

Depending on the ADC sampling rate, the JESD204B output interface can be operated with one lane per channel. The JESD204B setup and configuration of the frame assembly parameters is handled via the SPI interface.

The JESD204B transmitter block shown in Figure 66 consists of the transport layer, the data scrambler, and the link layer. The transport layer maps the ADC output data into the selected JESD204B frame data format and manages if the ADC output data or test patterns are being transmitted. The link layer performs the 8b, 10b data encoding as well as the synchronization and initial lane alignment using the SYNC input signal. Optionally, data from the transport layer can be scrambled.

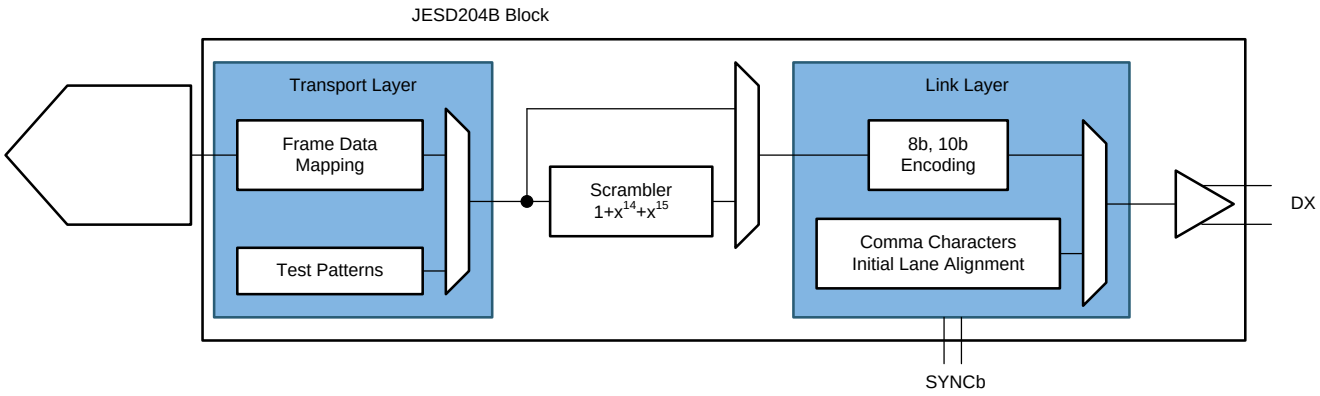

Figure 66. JESD Interface Block Diagram

Programming (continued)

7.5.2 JESD204B Initial Lane Alignment (ILA)

The initial lane alignment process is started by the receiving device by deasserting the SYNCb signal. When a logic low is detected on the SYNC input pins, as shown in Figure 67, the ADS54J64 starts transmitting comma (K28.5) characters to establish code group synchronization.

When synchronization is complete, the receiving device reasserts the SYNCb signal and the ADS54J64 starts the initial lane alignment sequence with the next local multi-frame clock boundary. The ADS54J64 transmits four multi-frames, each containing K frames (K is SPI programmable). Each of the multi-frames contains the frame start and end symbols and the second multi-frame also contains the JESD204 link configuration data.

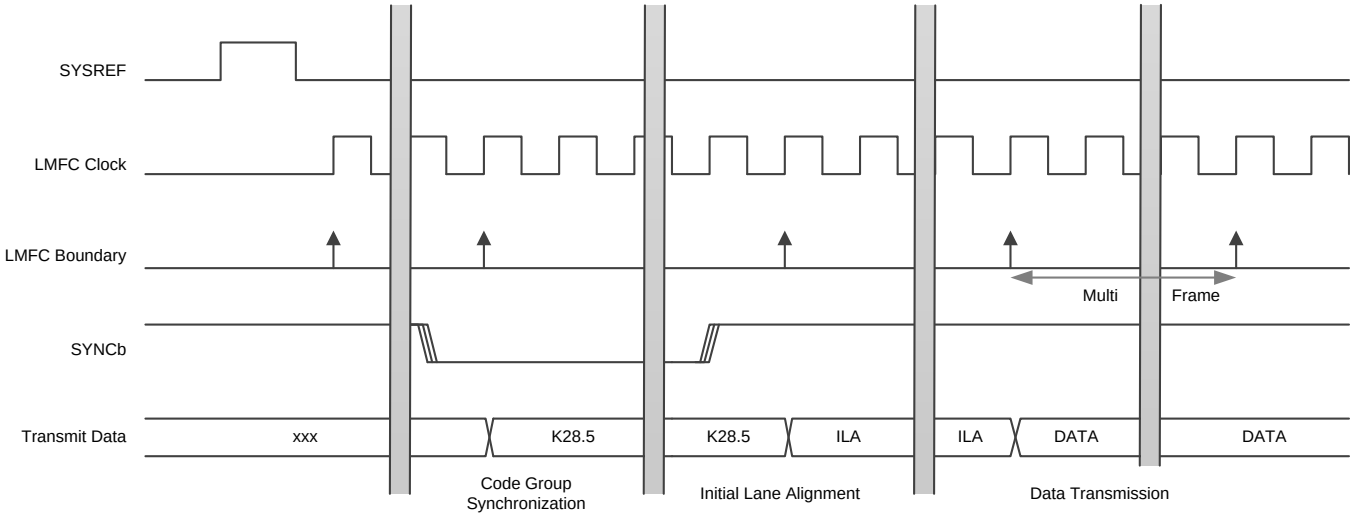

Figure 67. ILA Sequence

Copyright © 2017, Texas Instruments Incorporated

Programming (continued)

7.5.3 JESD204B Frame Assembly

The JESD204B standard defines the following parameters:

- L is the number of lanes per link
- M is the number of converters per device
- F is the number of octets per frame clock period
- S is the number of samples per frame

Table 3 lists the available JESD204B formats and valid ranges for the ADS54J64. The ranges are limited by the SerDes line rate and the maximum ADC sample frequency.

Table 3. Available JESD204B Formats and Valid Ranges for the ADS54J64

L	M	F	S	OPERATING MODE	DIGITAL MODE	OUTPUT FORMAT	MAX ADC OUTPUT RATE (MSPS)	MAX f_{SerDes} (Gbps)	JESD PLL REGISTER CONFIGURATION
4	8	4	1	0, 1	2x decimation	Complex	250	10.0	—
4	4	2	1	2, 4	2x decimation	Real	250	5.0	CTRL_SER_MODE = 1, SerDes_MODE = 1
2	4	4	1	2, 4	2x decimation	Real	250	10.0	—
4	8	4	1	6	4x decimation	Complex	125	5.0	—
2	8	8	1	6	4x decimation	Complex	125	10.0	CTRL_SER_MODE = 1, SerDes_MODE = 3
4	4	2	1	7	2x decimation with 0-pad	Real	500	10.0	—
4	4	2	1	3, 8	DDC bypass	Real	500	10.0	—
4	2	1	1	8	DDC bypass dual ADC	Real	1000	10.0	—

Table 4, Table 5, and Table 6 show the detailed frame assembly for various LMFS settings.

Table 4. Detailed Frame Assembly for Four-Lane Modes (Modes 0, 1, 3, 6, 7, and 8)

OUTPUT LANE	LMFS = 4841				LMFS = 4421				LMFS = 4421			
DA	AI_0[15:8]	AI_0[7:0]	AQ_0[15:8]	AQ0[7:0]	A_0[15:8]	A_0[7:0]	A_1[15:8]	A_1[7:0]	A_0[15:8]	A_0[7:0]	0000 0000	0000 0000
DB	BI_0[15:8]	BI_0[7:0]	BQ_0[15:8]	BQ_0[7:0]	B_0[15:8]	B_0[7:0]	B_1[15:8]	B_1[7:0]	B_0[15:8]	B_0[7:0]	0000 0000	0000 0000
DC	CI_0[15:8]	CI_0[7:0]	CQ_0[15:8]	CQ_0[7:0]	C_0[15:8]	C_0[7:0]	C_1[15:8]	C_1[7:0]	C_0[15:8]	C_0[7:0]	0000 0000	0000 0000
DD	DI_0[15:8]	DI_0[7:0]	DQ_0[15:8]	DQ_0[7:0]	D_0[15:8]	D_0[7:0]	D_1[15:8]	D_1[7:0]	D_0[15:8]	D_0[7:0]	0000 0000	0000 0000

Table 5. Detailed Frame Assembly for Two-Lane Modes (Modes 2 and 4)

OUTPUT LANE	LMFS = 2441				LMFS = 2881							
DB	A_0[15:8]	A_0[7:0]	B_0[15:8]	B_0[7:0]	AI_0[15:8]	AI_0[7:0]	AQ_0[15:8]	$AQ_0$7:0]	BI_0[15:8]	BI_0[7:0]	BQ_0[15:8]	BQ_0[7:0]
DC	C_0[15:8]	C_0[7:0]	D_0[15:8]	D_0[7:0]	CI_0[15:8]	CI_0[7:0]	CQ_0[15:8]	CQ_0[7:0]	DI_0[15:8]	DI_0[7:0]	DQ_0[15:8]	DQ_0[7:0]

Table 6. Detailed Frame Assembly for Four-Lane Mode (2x Interleaved Dual ADC)

OUTPUT LANE	LMFS = 4211			
DA	$AB^{(1)}_0$[15:8]	AB_1[15:8]	AB_2[15:8]	AB_3[15:8]
DB	AB_0[7:0]	AB_1[7:0]	AB_2[7:0]	AB_3[7:0]
DC	$CD^{(2)}_0$[15:8]	CD_1[15:8]	CD_2[15:8]	CD_3[15:8]
DD	CD_0[7:0]	CD_1[7:0]	CD_2[7:0]	CD_3[7:0]

(1) AB corresponds to the average output of channel A and channel B.
(2) CD corresponds to the average output of channel C and channel D.

Copyright © 2017, Texas Instruments Incorporated

7.5.4 JESD Output Switch

To ease layout constraints, the ADS54J64 provides a digital cross-point switch in the JESD204B block (as shown in Figure 68) that allows internal routing of any output of the two ADCs within one channel pair to any of the two JESD204B serial transmitters. The cross-point switch routing is configured via the SPI (address 41h in the SERDES_XX digital page).

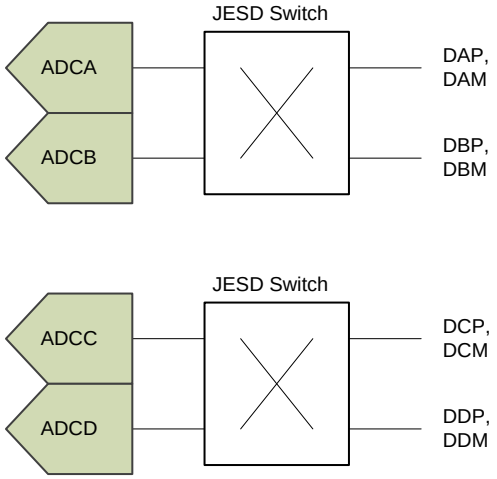

Figure 68. Switching the Output Lanes

7.5.4.1 SerDes Transmitter Interface

As shown in Figure 69, each 10-Gbps SerDes transmitter output requires ac-coupling between the transmitter and receiver. Terminate the differential pair with 100 Ω as close to the receiving device as possible to avoid unwanted reflections and signal degradation.

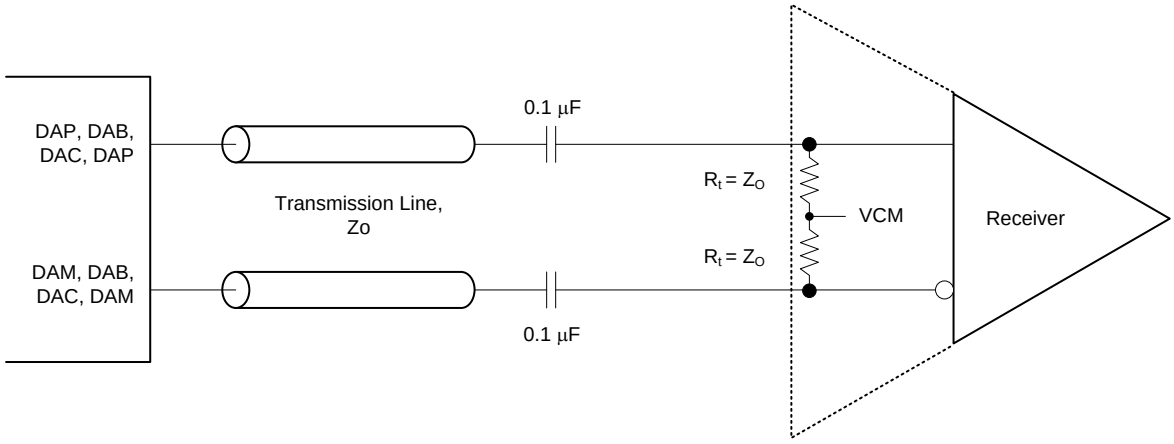

Figure 69. SerDes Transmitter Connection to Receiver

7.5.4.2 SYNCb Interface

The ADS54J64 supports single SYNCb control (where the SYNCb input controls all four JESD204B links) or dual SYNCb control (where one SYNCb input controls two JESD204B lanes: DA, DB and DC, DD). When using the single SYNCb control, connect the unused input to a differential logic high (SYNCbxxP = DVDD, SYNCbxxM = 0 V).

Copyright © 2017, Texas Instruments Incorporated

7.5.4.3 Eye Diagram

Figure 70 to Figure 73 show the serial output eye diagrams of the ADS54J64 at 7.5 Gbps and 10 Gbps with default and increased output voltage swing against the JESD204B mask.

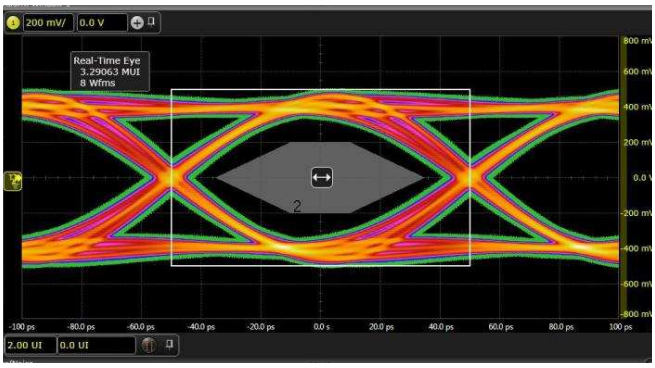

Figure 70. Eye at 10-Gbps Bit Rate With Default Output Swing

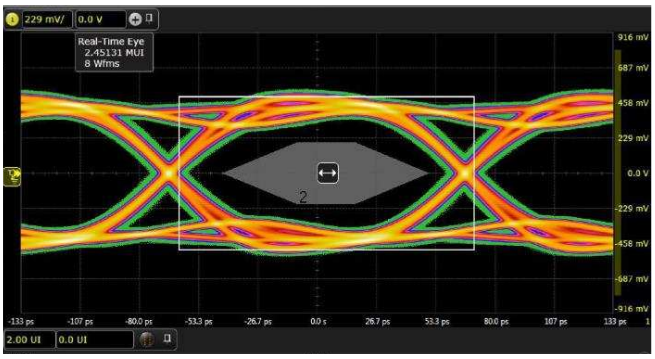

Figure 71. Eye at 7.5-Gbps Bit Rate With Default Output Swing

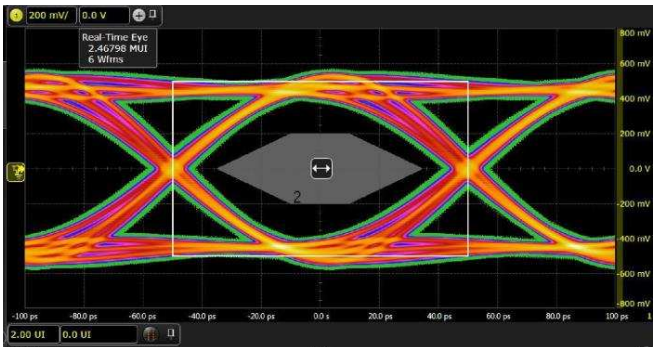

Figure 72. Eye at 10-Gbps Bit Rate With Increased Output Swing

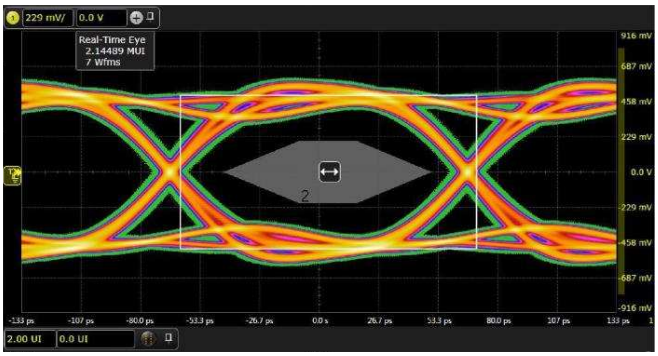

Figure 73. Eye at 7.5-Gbps Bit Rate With Increased Output Swing

7.5.5 Device Configuration

The ADS54J64 can be configured using a serial programming interface, as described in the *Register Maps* section. In addition, the device has one dedicated parallel pin (PDN) for controlling the power-down modes. The ADS54J64 supports a 24-bit (16-bit address, 8-bit data) SPI operation and uses paging to access all register bits.

7.5.5.1 Details of the Serial Interface

The ADC has a set of internal registers that can be accessed by the serial interface formed by the SEN (serial interface enable), SCLK (serial interface clock), SDIN (serial data input data), and SDOUT (serial data output) pins. Serially shifting bits into the device is enabled when SEN is low. SDIN serial data are latched at every SCLK rising edge when SEN is active (low). Data can be loaded in multiples of 24-bit words within a single active SEN pulse. The first 16 bits form the register address and the remaining eight bits are the register data. The interface can work with SCLK frequencies from 10 MHz down to very low speeds (of a few hertz) and also with a non-50% SCLK duty cycle.

7.5.5.1.1 Register Initialization

After power-up, the internal registers must be initialized to the default values. This initialization can be accomplished in one hardware reset by applying a high pulse on the RESET pin.

Copyright © 2017, Texas Instruments Incorporated

7.5.5.2 Serial Register Write

The internal registers of the ADS54J64 can be programmed (as shown in Figure 74) by:

1. Driving the SEN pin low
2. Setting the R/W bit = 0
3. Initiating a serial interface cycle specifying the address of the register (A[14:0]) whose content must be written
4. Writing the 8-bit data that is latched in on the SCLK rising edge

The ADS54J64 has several different register pages (page selection in address 11h, 12h). Specify the register page before writing to the desired address. The register page only must be set one time for continuous writes to the same page.

During the write operation, the SDOUT pin is in a high-impedance mode and must float.

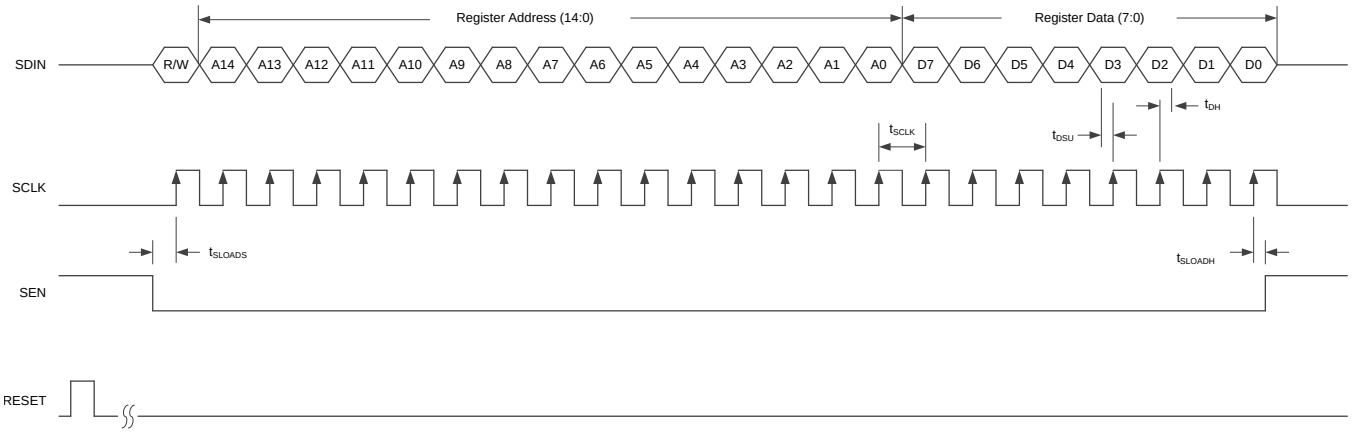

Figure 74. Serial Interface Write Timing Diagram

Copyright © 2017, Texas Instruments Incorporated

7.5.5.3 Serial Read

Figure 75 shows a typical 4-wire serial register readout. In the default 4-pin configuration, the SDIN pin is the data output from the ADS54J64 during the data transfer cycle when SDOUT is in a high-impedance state. The internal registers of the ADS54J64 can be read out by:

1. Driving the SEN pin low
2. Setting the R/W bit to 1 to enable read back
3. Specifying the address of the register (A[14:0]) whose content must be read back
4. The device outputs the contents (D[7:0]) of the selected register on the SDOUT pin (pin 51)
5. The external controller can latch the contents at the SCLK rising edge

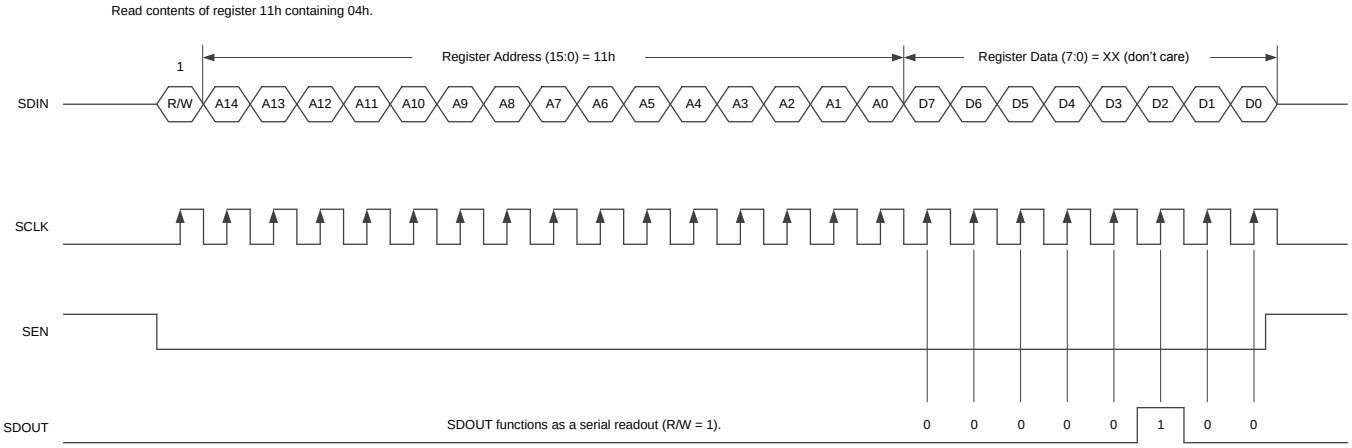

Figure 75. Serial Interface 4-Wire Read Timing Diagram

7.6 Register Maps

7.6.1 Register Map

The ADS54J64 registers are organized on different pages depending on their internal functions. The pages are accessed by selecting the page in the master pages 11h–13h. The page selection must only be written one time for a continuous update of registers for that page.

There are six different SPI banks (see Figure 76 and Table 7) that group together different functions:

- GLOBAL: contains controls for accessing other SPI banks
- DIGTOP: top-level digital functions
- ANALOG: registers controlling power-down and analog functions
- SERDES_XX: registers controlling JESD204B functions
- CHX: registers controlling channel-specific functions, including DDC
- ADCXX: register page for one of the eight interleaved ADCs

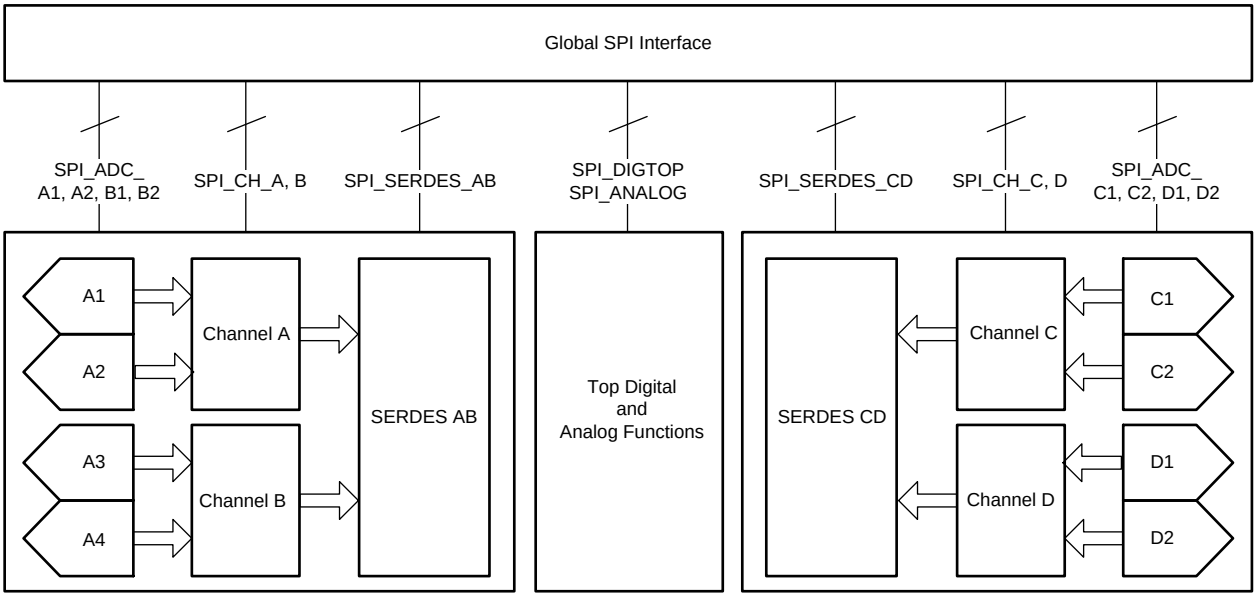

Figure 76. SPI Register Block Diagram

Copyright © 2017, Texas Instruments Incorporated

Table 7. Serial Interface Register Map

ADDRESS (Hex)	7	6	5	4	3	2	1	0
GLOBAL PAGE								
00h	WRITE_1	0	0	0	0	0	0	SW_RESET
04h	VERSION_ID							
11h	SPI_D2	SPI_D1	SPI_C2	SPI_C1	SPI_B2	SPI_B1	SPI_A2	SPI_A1
12h	0	SPI_SERDES_CD	SPI_SERDES_AB	SPI_CHD	SPI_CHC	SPI_CHB	SPI_CHA	SPI_DIGTOP
13h	0	0	0	0	0	0	0	SPI_ANALOG
DIGTOP PAGE								
64h	0	0	0	0	0	0	FS_375_500	0
8Dh	CUSTOMPATTERN1[7:0]							
8Eh	CUSTOMPATTERN1[15:8]							
8Fh	CUSTOMPATTERN2[7:0]							
90h	CUSTOMPATTERN2[15:8]							
91h	TESTPATTERNSELECT				TESTPATTERNENCHD	TESTPATTERNENCHC	TESTPATTERNENCHB	TESTPATTERNENCHA
A5h	0	0	0	0	0	0	CH_CD_AVG_EN	CH_AB_AVG_EN
A6h	0	0	AVG_ENABLE	OVR_ON_LSB	GAIN_WORD_ENABLE	0	0	0
ABh	0	0	0	0	0	0	INTERLEAVE_A	SPECIALMODE0
ACh	0	0	0	0	0	0	INTERLEAVE_C	SPECIALMODE1
ADh	0	0	0	0	DDCMODEAB			
AEh	0	0	0	0	DDCMODECD			
B7h	0	0	0	0	0	0	0	LOAD_TRIMS
8Ch	0	0	0	0	0	0	ENABLE_LOAD_TRIMS	0
ANALOG PAGE								
6Ah	0	0	0	0	0	0	DIS_SYSREF	0
6Fh	0	JESD_SWING			0	0	0	0
71h	EMP_LANE_B[5:4]		EMP_LANE_A					
72h	0	0	0	0	EMP_LANE_B[3:0]			
93h	EMP_LANE_D[5:4]		EMP_LANE_C					
94h	0	0	0	0	EMP_LANE_D[3:0]			
9Bh	0	0	0	SYSREF_PDN	0	0	0	0
9Dh	PDN_CHA	PDN_CHB	0	0	PDN_CHD	PDN_CHC	0	0
9Eh	0	0	0	PDN_SYNCAB	0	0	0	PDN_GLOBAL
9Fh	0	0	0	0	0	0	PIN_PDN_MODE	FAST_PDN
AFh	0	0	0	0	0	0	PDN_SYNCCD	0
SERDES_XX PAGE								
20h	CTRL_K	CTRL_SER_MODE	0	TRANS_TEST_EN	0	LANE_ALIGN	FRAME_ALIGN	TX_ILA_DIS
21h	SYNC_REQ	OPT_SYNC_REQ	SYNCB_SEL_AB_CD	0	0	0	SERDES_MODE	
22h	LINK_LAYER_TESTMODE_SEL			RPAT_SET_DISP	LMFC_MASK_RESET	0	0	0
23h	FORCE_LMFC_COUNT	LMFC_CNT_INIT					RELEASE_ILANE_REQ	
25h	SCR_EN	0	0	0	0	0	0	0
26h	0	0	0	K_NO_OF_FRAMES_PER_MULTIFRAME				

Copyright © 2017, Texas Instruments Incorporated

Table 7. Serial Interface Register Map (continued)

ADDRESS (Hex)	7	6	5	4	3	2	1	0
28h	0	0	0	0	CTRL_LID	0	0	0
2Dh	LID1				LID2			
36h	PRBS_MODE		0	0	0	0	0	0
41h	LANE_BONA				LANE_AONB			
42h	0	0	0	0	INVERT_AC		INVERT_BD	
CHX PAGE								
26h	0	0	0	0	0	0	GAINWORD	
27h	OVR_ENABLE	OVR_FAST_SEL	0	0	OVR_LSB1	0	OVR_LSB0	0
2Dh	0	0	0	0	0	0	NYQUIST_SELECT	0
78h	0	0	0	0	0	FS4_SIGN	NYQ_SEL_MODE02	NYQ_SEL
7Ah	NCO_WORD[15:8]							
7Bh	NCO_WORD[7:0]							
7Eh	0	0	0	0	0	MODE467_GAIN	MODE0_GAIN	MODE13_GAIN
ADCXX PAGE								
07h	FAST_OVR_THRESHOLD_HIGH							
08h	FAST_OVR_THRESHOLD_LOW							
D5h	0	0	0	0	CAL_EN	0	0	0
2Ah	0	0	0	0	0	0	0	ADC_TRIM1
CFh	ADC_TRIM2				0	0	0	0

Copyright © 2017, Texas Instruments Incorporated

7.6.1.1 Register Description

Table 8 lists the access codes for the ADS54J64 registers.

Table 8. ADS54J64 Access Type Codes

Access Type	Code	Description
R	R	Read
R/W	R-W	Read or Write
W	W	Write
-n		Value after reset or the default value

7.6.1.1.1 GLOBAL Page Register Description

7.6.1.1.1.1 Register 00h (address = 00h) [reset = 0h], GLOBAL Page

Figure 77. Register 0h

7	6	5	4	3	2	1	0
WRITE_1	0	0	0	0	0	0	SW_RESET
R/W-0h	R/W-0h	R/W-0h	R/W-0h	R/W-0h	R/W-0h	R/W-0h	R/W-0h

Table 9. Register 00h Field Descriptions

Bit	Field	Type	Reset	Description
7	WRITE_1	R/W	0h	Always write 1
6-1	0	R/W	0h	Must read or write 0
0	SW_RESET	R/W	0h	This bit rests the device.

7.6.1.1.1.2 Register 04h (address = 04h) [reset = 0h], GLOBAL Page

Figure 78. Register 4h

7	6	5	4	3	2	1	0
VERSION_ID							
R-0h							

Table 10. Register 04h Field Descriptions

Bit	Field	Type	Reset	Description
7-0	VERSION_ID	R	0h	These bits set the version ID of the device. 16 : PG 1.0 32 : PG 2.0 48 : PG 3.0

Copyright © 2017, Texas Instruments Incorporated

7.6.1.1.1.3 Register 11h (address = 11h) [reset = 0h], GLOBAL Page

Figure 79. Register 11h

7	6	5	4	3	2	1	0
SPI_D2	SPI_D1	SPI_C2	SPI_C1	SPI_B2	SPI_B1	SPI_A2	SPI_A1
R/W-0h	R/W-0h	R/W-0h	R/W-0h	R/W-0h	R/W-0h	R/W-0h	R/W-0h

Table 11. Register 11h Field Descriptions

Bit	Field	Type	Reset	Description
7	SPI_D2	R/W	0h	This bit selects the ADC D2 SPI. 0 : ADC D2 SPI is disabled 1 : ADC D2 SPI is enabled
6	SPI_D1	R/W	0h	This bit selects the ADC D1 SPI. 0 : ADC D1 SPI is disabled 1 : ADC D1 SPI is enabled
5	SPI_C2	R/W	0h	This bit selects the ADC C2 SPI 0 : ADC C2 SPI is disabled 1 : ADC C2 SPI is enabled
4	SPI_C1	R/W	0h	This bit selects the ADC C1 SPI. 0 : ADC C1 SPI is disabled 1 : ADC C1 SPI is enabled
3	SPI_B2	R/W	0h	This bit selects the ADC B2 SPI. 0 : ADC B2 SPI is disabled 1 : ADC B2 SPI is enabled
2	SPI_B1	R/W	0h	This bit selects the ADC B1 SPI. 0 : ADC B1 SPI is disabled 1 : ADC B1 SPI is enabled
1	SPI_A2	R/W	0h	This bit selects the ADC A2 SPI. 0 : ADC A2 SPI is disabled 1 : ADC A2 SPI is enabled
0	SPI_A1	R/W	0h	This bit selects the ADC A1 SPI. 0 : ADC A1 SPI is disabled 1 : ADC A1 SPI is enabled

Copyright © 2017, Texas Instruments Incorporated

7.6.1.1.1.4 Register 12h (address = 12h) [reset = 0h], GLOBAL Page

Figure 80. Register 12h

7	6	5	4	3	2	1	0
0	SPI_SERDES_CD	SPI_SERDES_AB	SPI_CHD	SPI_CHC	SPI_CHB	SPI_CHA	SPI_DIGTOP
R/W-0h	R/W-0h	R/W-0h	R/W-0h	R/W-0h	R/W-0h	R/W-0h	R/W-0h

Table 12. Register 12h Field Descriptions

Bit	Field	Type	Reset	Description
7	0	R/W	0h	Must read or write 0
6	SPI_SERDES_CD	R/W	0h	This bit selects the channel CD SerDes SPI. 0 : Channel CD SerDes SPI is disabled 1 : Channel CD SerDes SPI is enabled
5	SPI_SERDES_AB	R/W	0h	This bit selects the channel AB SerDes SPI. 0 : Channel AB SerDes is disabled 1 : Channel AB SerDes is enabled
4	SPI_CHD	R/W	0h	This bit selects the channel D SPI. 0 : Channel D SPI is disabled 1 : Channel D SPI is enabled
3	SPI_CHC	R/W	0h	This bit selects the channel C SPI. 0 : Channel C SPI is disabled 1 : Channel C SPI is enabled
2	SPI_CHB	R/W	0h	This bit selects the channel B SPI. 0 : Channel B SPI is disabled 1 : Channel B SPI is enabled
1	SPI_CHA	R/W	0h	This bit selects the channel A SPI. 0 : Channel A SPI is disabled 1 : Channel A SPI is enabled
0	SPI_DIGTOP	R/W	0h	This bit selects the DIGTOP SPI. 0 : DIGTOP SPI is disabled 1 : DIGTOP SPI is enabled

7.6.1.1.1.5 Register 13h (address = 13h) [reset = 0h], GLOBAL Page

Figure 81. Register 13h

7	6	5	4	3	2	1	0
0	0	0	0	0	0	0	SPI_ANALOG
R/W-0h	R/W-0h	R/W-0h	R/W-0h	R/W-0h	R/W-0h	R/W-0h	R/W-0h

Table 13. Register 13h Field Descriptions

Bit	Field	Type	Reset	Description
7-1	0	R/W	0h	Must read or write 0
0	SPI_ANALOG	R/W	0h	This bit selects the analog SPI. 0 : Analog SPI is disabled 1 : Analog SPI is enabled

Copyright © 2017, Texas Instruments Incorporated

7.6.1.1.2 DIGTOP Page Register Description

7.6.1.1.2.1 Register 64h (address = 64h) [reset = 0h], DIGTOP Page

Figure 82. Register 64h

7	6	5	4	3	2	1	0
0	0	0	0	0	0	FS_375_500	0
R/W-0h	R/W-0h	R/W-0h	R/W-0h	R/W-0h	R/W-0h	R/W-0h	R/W-0h

Table 14. Register 64h Field Descriptions

Bit	Field	Type	Reset	Description
7-2	0	R/W	0h	Must read or write 0
1	FS_375_500	R/W	0h	This bit selects the clock rate for loading trims. 0 : 375 MSPS 1 : 500 MSPS
0	0	R/W	0h	Must read or write 0

7.6.1.1.2.2 Register 8Dh (address = 8Dh) [reset = 0h], DIGTOP Page

Figure 83. Register 8Dh

7	6	5	4	3	2	1	0
CUSTOMPATTERN1[7:0]							
R/W-0h							

Table 15. Register 8Dh Field Descriptions

Bit	Field	Type	Reset	Description
7-0	CUSTOMPATTERN1[7:0]	R/W	0h	These bits set the custom pattern 1 that is used when the test pattern is enabled and set to a single or dual test pattern.

7.6.1.1.2.3 Register 8Eh (address = 8Eh) [reset = 0h], DIGTOP Page

Figure 84. Register 8Eh

7	6	5	4	3	2	1	0
CUSTOMPATTERN1[15:8]							
R/W-0h							

Table 16. Register 8Eh Field Descriptions

Bit	Field	Type	Reset	Description
7-0	CUSTOMPATTERN1[15:8]	R/W	0h	These bits set the custom pattern 1 that is used when the test pattern is enabled and set to a single or dual test pattern.

Copyright © 2017, Texas Instruments Incorporated

7.6.1.1.2.4 Register 8Fh (address = 8Fh) [reset = 0h], DIGTOP Page

Figure 85. Register 8Fh

7	6	5	4	3	2	1	0
CUSTOMPATTERN2[7:0]							
R/W-0h							

Table 17. Register 8Fh Field Descriptions

Bit	Field	Type	Reset	Description
7-0	CUSTOMPATTERN2[7:0]	R/W	0h	These bits set the custom pattern 2 that is used when the test pattern select is set to dual pattern mode.

7.6.1.1.2.5 Register 90h (address = 90h) [reset = 0h], DIGTOP Page

Figure 86. Register 90h

7	6	5	4	3	2	1	0
CUSTOMPATTERN2[15:8]							
R/W-0h							

Table 18. Register 90h Field Descriptions

Bit	Field	Type	Reset	Description
7-0	CUSTOMPATTERN2[15:8]	R/W	0h	These bits set the custom pattern 2 that is used when the test pattern select is set to dual pattern mode.

7.6.1.1.2.6 Register 91h (address = 91h) [reset = 0h], DIGTOP Page

Figure 87. Register 91h

7 6 5 4	3	2	1	0
TESTPATTERNSELECT	TESTPATTERNENCHD	TESTPATTERNENCHC	TESTPATTERNENCHB	TESTPATTERNENCHA
R/W-0h	R/W-0h	R/W-0h	R/W-0h	R/W-0h

Table 19. Register 91h Field Descriptions

Bit	Field	Type	Reset	Description
7-4	TESTPATTERNSELECT	R/W	0h	These bits select the test pattern on the output when the test pattern is enabled for a suitable channel. 0 : Default 1 : All zeros 2 : All ones 3 : Toggle pattern 4 : Ramp pattern 6 : Custom pattern 1 7 : Toggle between custom pattern 1 and custom pattern 2 8 : Deskew pattern (0xAAAA)
3	TESTPATTERNENCHD	R/W	0h	This bit enables the channel D test pattern. 0 : Default data on channel D 1 : Enable test pattern on channel D
2	TESTPATTERNENCHC	R/W	0h	This bit enables the channel C test pattern. 0 : Default data on channel C 1 : Enable test pattern on channel C
1	TESTPATTERNENCHB	R/W	0h	This bit enables the channel B test pattern. 0 : Default data on channel B 1 : Enable test pattern on channel B
0	TESTPATTERNENCHA	R/W	0h	This bit enables the channel A test pattern. 0 : Default data on channel A 1 : Enable test pattern on channel A

Copyright © 2017, Texas Instruments Incorporated

7.6.1.1.2.7 Register A5h (address = A5h) [reset = 0h], DIGTOP Page

Figure 88. Register A5h

7	6	5	4	3	2	1	0
0	0	0	0	0	0	CH_CD_AVG_EN	CH_AB_AVG_EN
R/W-0h	R/W-0h	R/W-0h	R/W-0h	R/W-0h	R/W-0h	R/W-0h	R/W-0h

Table 20. Register A5h Field Descriptions

Bit	Field	Type	Reset	Description
7-2	0	R/W	0h	Must read or write 0
1	CH_CD_AVG_EN	R/W	0h	0: Averaging is disabled for channels C, D 1: Averaging is enabled for channels C, D; set AVG_ENABLE in Register A6h (address = A6h) [reset = 0h], DIGTOP Page to 1 if using this option
0	CH_AB_AVG_EN	R/W	0h	0: Averaging is disabled for channels A, B 1: Averaging is enabled for channels A, B; set AVG_ENABLE in Register A6h (address = A6h) [reset = 0h], DIGTOP Page to 1 if using this option

7.6.1.1.2.8 Register A6h (address = A6h) [reset = 0h], DIGTOP Page

Figure 89. Register A6h

7	6	5	4	3	2	1	0
0	0	AVG_ENABLE	OVR_ON_LSB	GAIN_WORD_ENABLE	0	0	0
R/W-0h	R/W-0h	R/W-0h	R/W-0h	R/W-0h	R/W-0h	R/W-0h	R/W-0h

Table 21. Register A6h Field Descriptions

Bit	Field	Type	Reset	Description
7-6	0	R/W	0h	Must read or write 0
5	AVG_ENABLE	R/W	0h	0: Default operation 1: Enable averaging option for the AB and CD channel pairs
4	OVR_ON_LSB	R/W	0h	This bit enables the overrange indicator (OVR) on the LSB1 and LSB0 bits. OVR_LSB1 and OVR_LSB0 must be configured in register 27h of the CHX page. 0 : Default data 1 : OVR on LSB1 and LSB0 bits
3	GAIN_WORD_ENABLE	R/W	0h	This bit enables the digital gain. Gain can be programmed using the GAINWORD bits in register 26h of the CHX page. 0 : Disable digital gain 1 : Enable digital gain
2-0	0	R/W	0h	Must read or write 0

Copyright © 2017, Texas Instruments Incorporated

7.6.1.1.2.9 Register ABh (address = ABh) [reset = 0h], DIGTOP Page

Figure 90. Register ABh

7	6	5	4	3	2	1	0
0	0	0	0	0	0	INTERLEAVE_A	SPECIALMODE0
R/W-0h	R/W-0h	R/W-0h	R/W-0h	R/W-0h	R/W-0h	R/W-0h	R/W-0h

Table 22. Register ABh Field Descriptions

Bit	Field	Type	Reset	Description
7-2	0	R/W	0h	Must read or write 0
1	INTERLEAVE_A	R/W	0h	0: Default operation 1: 2x interleaved data enable; this bit is used in dual ADC mode to bring the average data of channels A and B on the JESD outputs; averaging mode is enabled by setting CH_AB_AVG_EN to 1 (see register A5h)
0	SPECIALMODE0	R/W	0h	Always write 1

7.6.1.1.2.10 Register ACh (address = ACh) [reset = 0h], DIGTOP Page

Figure 91. Register ACh

7	6	5	4	3	2	1	0
0	0	0	0	0	0	INTERLEAVE_C	SPECIALMODE1
R/W-0h	R/W-0h	R/W-0h	R/W-0h	R/W-0h	R/W-0h	R/W-0h	R/W-0h

Table 23. Register ACh Field Descriptions

Bit	Field	Type	Reset	Description
7-2	0	R/W	0h	Must read or write 0
1	INTERLEAVE_C	R/W	0h	0: Default operation 1: 2x interleaved data enable; this bit is used in dual ADC mode to bring the average data of channels C and D on the JESD outputs; averaging mode is enabled by setting CH_CD_AVG_EN to 1 (see register A5h)
0	SPECIALMODE1	R/W	0h	Always write 1

7.6.1.1.2.11 Register ADh (address = ADh) [reset = 0h], DIGTOP Page

Figure 92. Register ADh

7	6	5	4	3	2	1	0
0	0	0	0	DDCMODEAB			
R/W-0h	R/W-0h	R/W-0h	R/W-0h	R/W-0h			

Table 24. Register ADh Field Descriptions

Bit	Field	Type	Reset	Description
7-4	0	R/W	0h	Must read or write 0
3-0	DDCMODEAB	R/W	0h	These bits select the DDC mode for the AB channel pair. 0 : Mode 0 1 : Mode 1 2 : Mode 2 3 : Mode 3 4 : Mode 4 6 : Mode 6 7 : Mode 7 8 : Mode 8

Copyright © 2017, Texas Instruments Incorporated

7.6.1.1.2.12 Register AEh (address = AEh) [reset = 0h], DIGTOP Page

Figure 93. Register AEh

7	6	5	4	3	2	1	0
0	0	0	0	DDCMODECD			
R/W-0h	R/W-0h	R/W-0h	R/W-0h	R/W-0h			

Table 25. Register AEh Field Descriptions

Bit	Field	Type	Reset	Description
7-4	0	R/W	0h	Must read or write 0
3-0	DDCMODECD	R/W	0h	These bits select the DDC mode for the CD channel pair. 0 : Mode 0 1 : Mode 1 2 : Mode 2 3 : Mode 3 4 : Mode 4 6 : Mode 6 7 : Mode 7 8 : Mode 8

7.6.1.1.2.13 Register B7h (address = B7h) [reset = 0h], DIGTOP Page

Figure 94. Register B7h

7	6	5	4	3	2	1	0
0	0	0	0	0	0	0	LOAD_TRIMS
R/W-0h	R/W-0h	R/W-0h	R/W-0h	R/W-0h	R/W-0h	R/W-0h	R/W-0h

Table 26. Register B7h Field Descriptions

Bit	Field	Type	Reset	Description
7-1	0	R/W	0h	Must read or write 0
0	LOAD_TRIMS	R/W	0h	This bit load trims the device.

7.6.1.1.2.14 Register 8Ch (address = 8Ch) [reset = 0h], DIGTOP Page

Figure 95. Register 8Ch

7	6	5	4	3	2	1	0
0	0	0	0	0	0	ENABLE_LOAD_TRIMS	0
R/W-0h	R/W-0h	R/W-0h	R/W-0h	R/W-0h	R/W-0h	R/W-0h	R/W-0h

Table 27. Register 8Ch Field Descriptions

Bit	Field	Type	Reset	Description
7-2	0	R/W	0h	Must read or write 0
1	ENABLE_LOAD_TRIMS	R/W	0h	0: Trim loading is disabled 1: Trim loading is enabled (recommended)
0	0	R/W	0h	Must read or write 0

Copyright © 2017, Texas Instruments Incorporated

7.6.1.1.3 ANALOG Page Register Description

7.6.1.1.3.1 Register 6Ah (address = 6Ah) [reset = 0h], ANALOG Page

Figure 96. Register 6Ah

7	6	5	4	3	2	1	0
0	0	0	0	0	0	DIS_SYSREF	0
R/W-0h	R/W-0h	R/W-0h	R/W-0h	R/W-0h	R/W-0h	R/W-0h	R/W-0h

Table 28. Register 6Ah Field Descriptions

Bit	Field	Type	Reset	Description
7-2	0	R/W	0h	Must read or write 0
1	DIS_SYSREF	R/W	0h	This bit masks the SYSREF input. 0 : SYSREF input is not masked 1 : SYSREF input is masked
0	0	R/W	0h	Must read or write 0

7.6.1.1.3.2 Register 6Fh (address = 6Fh) [reset = 0h], ANALOG Page

Figure 97. Register 6Fh

7	6	5	4	3	2	1	0
0	JESD_SWING			0	0	0	0
R/W-0h	R/W-0h			R/W-0h	R/W-0h	R/W-0h	R/W-0h

Table 29. Register 6Fh Field Descriptions

Bit	Field	Type	Reset	Description
7	0	R/W	0h	Must read or write 0
6-4	JESD_SWING	R/W	0h	These bits control the JESD swing. 0 : 860 mV_{PP} 1 : 810 mV_{PP} 2 : 770 mV_{PP} 3 : 745 mV_{PP} 4 : 960 mV_{PP} 5 : 930 mV_{PP} 6 : 905 mV_{PP} 7 : 880 mV_{PP}
3-0	0	R/W	0h	Must read or write 0

Copyright © 2017, Texas Instruments Incorporated

7.6.1.1.3.3 Register 71h (address = 71h) [reset = 0h], ANALOG Page

Figure 98. Register 71h

7	6	5	4	3	2	1	0
EMP_LANE_B[5:4]		EMP_LANE_A					
R/W-0h		R/W-0h					

Table 30. Register 71h Field Descriptions

Bit	Field	Type	Reset	Description
7-6	EMP_LANE_B[5:4]	R/W	0h	These bits along with bits 3-0 of register 72h set the de-emphasis for lane B. These bits select the amount of de-emphasis for the JESD output transmitter. The de-emphasis value in decibels (dB) is measured as the ratio between the peak value after the signal transitions to the settled value of the voltage in one bit period. 0 : 0 dB 1 : –1 dB 3 : –2 dB 7 : –4.1 dB 15 : –6.2 dB 31 : –8.2 dB 63 : –11.5 dB Others: Do not use
5-0	EMP_LANE_A	R/W	0h	These bits set the de-emphasis for lane A. These bits select the amount of de-emphasis for the JESD output transmitter. The de-emphasis value in dB is measured as the ratio between the peak value after the signal transitions to the settled value of the voltage in one bit period. 0 : 0 dB 1 : –1 dB 3 : –2 dB 7 : –4.1 dB 15 : –6.2 dB 31 : –8.2 dB 63 : –11.5 dB Others: Do not use

7.6.1.1.3.4 Register 72h (address = 72h) [reset = 0h], ANALOG Page

Figure 99. Register 72h

7	6	5	4	3	2	1	0
0	0	0	0	EMP_LANE_B[3:0]			
R/W-0h	R/W-0h	R/W-0h	R/W-0h	R/W-0h			

Table 31. Register 72h Field Descriptions

Bit	Field	Type	Reset	Description
7-4	0	R/W	0h	Must read or write 0
3-0	EMP_LANE_B[3:0]	R/W	0h	These bits along with bits 7-6 of register 71h set the de-emphasis for lane B. These bits select the amount of de-emphasis for the JESD output transmitter. The de-emphasis value in dB is measured as the ratio between the peak value after the signal transitions to the settled value of the voltage in one bit period. 0 : 0 dB 1 : –1 dB 3 : –2 dB 7 : –4.1 dB 15 : –6.2 dB 31 : –8.2 dB 63 : –11.5 dB Others: Do not use

Copyright © 2017, Texas Instruments Incorporated

7.6.1.1.3.5 Register 93h (address = 93h) [reset = 0h], ANALOG Page

Figure 100. Register 93h

7	6	5	4	3	2	1	0
EMP_LANE_D[5:4]		EMP_LANE_C					
R/W-0h		R/W-0h					

Table 32. Register 93h Field Descriptions

Bit	Field	Type	Reset	Description
7-6	EMP_LANE_D[5:4]	R/W	0h	These bits along with bits 3-0 of register 94h set the de-emphasis for lane D. These bits select the amount of de-emphasis for the JESD output transmitter. The de-emphasis value in dB is measured as the ratio between the peak value after the signal transitions to the settled value of the voltage in one bit period. 0 : 0 dB 1 : –1 dB 3 : –2 dB 7 : –4.1 dB 15 : –6.2 dB 31 : –8.2 dB 63 : –11.5 dB Others: Do not use
5-0	EMP_LANE_C	R/W	0h	These bits set the de-emphasis for lane C. These bits select the amount of de-emphasis for the JESD output transmitter. The de-emphasis value in dB is measured as the ratio between the peak value after the signal transitions to the settled value of the voltage in one bit period. 0 : 0 dB 1 : –1 dB 3 : –2 dB 7 : –4.1 dB 15 : –6.2 dB 31 : –8.2 dB 63 : –11.5 dB Others: Do not use

7.6.1.1.3.6 Register 94h (address = 94h) [reset = 0h], ANALOG Page

Figure 101. Register 94h

7	6	5	4	3	2	1	0
0	0	0	0	EMP_LANE_D[3:0]			
R/W-0h	R/W-0h	R/W-0h	R/W-0h	R/W-0h			

Table 33. Register 94h Field Descriptions

Bit	Field	Type	Reset	Description
7-4	0	R/W	0h	Must read or write 0
3-0	EMP_LANE_D[3:0]	R/W	0h	These bits along with bits 7-4 of register 93h set the de-emphasis for lane D. These bits select the amount of de-emphasis for the JESD output transmitter. The de-emphasis value in dB is measured as the ratio between the peak value after the signal transitions to the settled value of the voltage in one bit period. 0 : 0 dB 1 : –1 dB 3 : –2 dB 7 : –4.1 dB 15 : –6.2 dB 31 : –8.2 dB 63 : –11.5 dB Others: Do not use

Copyright © 2017, Texas Instruments Incorporated

7.6.1.1.3.7 Register 9Bh (address = 9Bh) [reset = 0h], ANALOG Page

Figure 102. Register 9Bh

7	6	5	4	3	2	1	0
0	0	0	SYSREF_PDN	0	0	0	0
R/W-0h	R/W-0h	R/W-0h	R/W-0h	R/W-0h	R/W-0h	R/W-0h	R/W-0h

Table 34. Register 9Bh Field Descriptions

Bit	Field	Type	Reset	Description
7-5	0	R/W	0h	Must read or write 0
4	SYSREF_PDN	R/W	0h	This bit powers down the SYSREF buffer. 0 : SYSREF buffer is powered up 1 : SYSREF buffer is powered down
3-0	0	R/W	0h	Must read or write 0

7.6.1.1.3.8 Register 9Dh (address = 9Dh) [reset = 0h], ANALOG Page

Figure 103. Register 9Dh

7	6	5	4	3	2	1	0
PDN_CHA	PDN_CHB	0	0	PDN_CHD	PDN_CHC	0	0
R/W-0h	R/W-0h	R/W-0h	R/W-0h	R/W-0h	R/W-0h	R/W-0h	R/W-0h

Table 35. Register 9Dh Field Descriptions

Bit	Field	Type	Reset	Description
7	PDN_CHA	R/W	0h	This bit powers down channel A. 0 : Normal operation 1 : Channel A is powered down
6	PDN_CHB	R/W	0h	This bit powers down channel B. 0 : Normal operation 1 : Channel B is powered down
5-4	0	R/W	0h	Must read or write 0
3	PDN_CHD	R/W	0h	This bit powers down channel D. 0 : Normal operation 1 : Channel D is powered down
2	PDN_CHC	R/W	0h	This bit powers down channel C. 0 : Normal operation 1 : Channel C is powered down
1-0	0	R/W	0h	Must read or write 0

Copyright © 2017, Texas Instruments Incorporated

7.6.1.1.3.9 Register 9Eh (address = 9Eh) [reset = 0h], ANALOG Page

Figure 104. Register 9Eh

7	6	5	4	3	2	1	0
0	0	0	PDN_SYNCAB	0	0	0	PDN_GLOBAL
R/W-0h	R/W-0h	R/W-0h	R/W-0h	R/W-0h	R/W-0h	R/W-0h	R/W-0h

Table 36. Register 9Eh Field Descriptions

Bit	Field	Type	Reset	Description
7-5	0	R/W	0h	Must read or write 0
4	PDN_SYNCAB	R/W	0h	This bit controls the STNCAB buffer power-down. 0 : SYNCAB buffer is powered up 1 : SYNCAB buffer is powered down
3-1	0	R/W	0h	Must read or write 0
0	PDN_GLOBAL	R/W	0h	This bit controls the global power-down. 0 : Global power-up 1 : Global power-down

7.6.1.1.3.10 Register 9Fh (address = 9Fh) [reset = 0h], ANALOG Page

Figure 105. Register 9Fh

7	6	5	4	3	2	1	0
0	0	0	0	0	0	PIN_PDN_MODE	FAST_PDN
R/W-0h	R/W-0h	R/W-0h	R/W-0h	R/W-0h	R/W-0h	R/W-0h	R/W-0h

Table 37. Register 9Fh Field Descriptions

Bit	Field	Type	Reset	Description
7-2	0	R/W	0h	Must read or write 0
1	PIN_PDN_MODE	R/W	0h	This bit selects the pin power-down mode. 0 : PDN pin is configured to fast power-down 1 : PDN pin is configured to global power-down
0	FAST_PDN	R/W	0h	This bit controls the fast power-down. 0 : Device powered up 1 : Fast power down

7.6.1.1.3.11 Register AFh (address = AFh) [reset = 0h], ANALOG Page

Figure 106. Register AFh

7	6	5	4	3	2	1	0
0	0	0	0	0	0	PDN_SYNCCD	0
R/W-0h	R/W-0h	R/W-0h	R/W-0h	R/W-0h	R/W-0h	R/W-0h	R/W-0h

Table 38. Register AFh Field Descriptions

Bit	Field	Type	Reset	Description
7-2	0	R/W	0h	Must read or write 0
1	PDN_SYNCCD	R/W	0h	This bit controls the SYNCCD buffer power-down. 0 : SYNCCD buffer is powered up 1 : SYNCCD buffer is powered down
0	0	R/W	0h	Must read or write 0

Copyright © 2017, Texas Instruments Incorporated

7.6.1.1.4 SERDES_XX Page Register Description

7.6.1.1.4.1 Register 20h (address = 20h) [reset = 0h], SERDES_XX Page

Figure 107. Register 20h

7	6	5	4	3	2	1	0
CTRL_K	CTRL_SER_MODE	0	TRANS_TEST_EN	0	LANE_ALIGN	FRAME_ALIGN	TX_ILA_DIS
R/W-0h	R/W-0h	R/W-0h	R/W-0h	R/W-0h	R/W-0h	R/W-0h	R/W-0h

Table 39. Register 20h Field Descriptions

Bit	Field	Type	Reset	Description
7	CTRL_K	R/W	0h	This bit is the enable bit for programming the number of frames per multi-frame. 0 : Five frames per multi-frame (default) 1 : Frames per multi-frame can be programmed using register 26h
6	CTRL_SER_MODE	R/W	0h	This bit allows the SERDES_MODE setting in register 21h (bits 1-0) to be changed. 0 : Disabled 1 : Enables SERDES_MODE setting
5	0	R/W	0h	Must read or write 0
4	TRANS_TEST_EN	R/W	0h	This bit generates the long transport layer test pattern mode, as per section 5.1.6.3 of the JESD204B specification. 0 : Test mode is disabled 1 : Test mode is enabled
3	0	R/W	0h	Must read or write 0
2	LANE_ALIGN	R/W	0h	This bit inserts the lane-alignment character (K28.3) for the receiver to align to the lane boundary, as per section 5.3.3.5 of the JESD204B specification. 0 : Normal operation 1 : Inserts lane-alignment characters
1	FRAME_ALIGN	R/W	0h	This bit inserts the frame-alignment character (K28.7) for the receiver to align to the lane boundary, as per section 5.3.3.5 of the JESD204B specification. 0 : Normal operation 1 : Inserts frame-alignment characters
0	TX_ILA_DIS	R/W	0h	This bit disables sending the initial link alignment (ILA) sequence when SYNC is deasserted. 0 = Normal operation 1 = Disables ILA

Copyright © 2017, Texas Instruments Incorporated

7.6.1.1.4.2 Register 21h (address = 21h) [reset = 0h], SERDES_XX Page

Figure 108. Register 21h

7	6	5	4	3	2	1	0
SYNC_REQ	OPT_SYNC_REQ	SYNCB_SEL_AB_CD	0	0	0	SERDES_MODE	
R/W-0h	R/W-0h	R/W-0h	R/W-0h	R/W-0h	R/W-0h	R/W-0h	

Table 40. Register 21h Field Descriptions

Bit	Field	Type	Reset	Description
7	SYNC_REQ	R/W	0h	This bit controls the SYNC register (bit 6 must be enabled). 0 : Normal operation 1 : ADC output data are replaced with K28.5 characters
6	OPT_SYNC_REQ	R/W	0h	This bit enables SYNC operation. 0 : Normal operation 1 : Enables SYNC from the SYNC_REQ register bit
5	SYNCB_SEL_AB_CD	R/W	0h	This bit selects which SYNCb input controls the JESD interface. 0 : Use the SYNCbAB, SYNCbCD pins 1 : When set in the SerDes AB SPI, SYNCbCD is used for the SerDes AB and CD; when set in the SerDes CD SPI, SYNCbAB is used for the SerDes AB and CD
4-2	0	R/W	0h	Must read or write 0
1-0	SerDes_MODE	R/W	0h	These bits set the JESD output parameters. The CTRL_SER_MODE bit (register 20h, bit 6) must also be set to control these bits. These bits are auto configured for modes 0, 1, 3, and 7, but must be configured for modes 2, 4, and 6.

7.6.1.1.4.3 Register 22h (address = 22h) [reset = 0h], SERDES_XX Page

Figure 109. Register 22h

7	6	5	4	3	2	1	0
LINK_LAYER_TESTMODE_SEL			RPAT_SET_DISP	LMFC_MASK_RESET	0	0	0
R/W-0h			R/W-0h	R/W-0h	R/W-0h	R/W-0h	R/W-0h

Table 41. Register 22h Field Descriptions

Bit	Field	Type	Reset	Description
7-5	LINK_LAYER_TESTMODE_SEL	R/W	0h	These bits generate a pattern as per section 5.3.3.8.2 of the JESD204B document. 0 : Normal ADC data 1 : D21.5 (high-frequency jitter pattern) 2 : K28.5 (mixed-frequency jitter pattern) 3 : Repeat the initial lane alignment (generates a K28.5 character and continuously repeats lane alignment sequences) 4 : 12-octet RPAT jitter pattern 6 : PRBS pattern (PRBS7, 15, 23, 31); use PRBS_MODE (register 36h, bits 7-6) to select the PRBS pattern
4	RPAT_SET_DISP	R/W	0h	This bit changes the running disparity in the modified RPAT pattern test mode (only when the link layer test mode = 100). 0 : Normal operation 1 : Changes disparity
3	LMFC_MASK_RESET	R/W	0h	0 : Default 1 : Resets the LMFC mask
2-0	0	R/W	0h	Must read or write 0

Copyright © 2017, Texas Instruments Incorporated

7.6.1.1.4.4 Register 23h (address = 23h) [reset = 0h], SERDES_XX Page

Figure 110. Register 23h

7	6	5	4	3	2	1	0
FORCE_LMFC_COUNT	LMFC_CNT_INIT					RELEASE_ILANE_REQ	
R/W-0h	R/W-0h					R/W-0h	

Table 42. Register 23h Field Descriptions

Bit	Field	Type	Reset	Description
7	FORCE_LMFC_COUNT	R/W	0h	This bit forces an LMFC count. 0 : Normal operation 1 : Enables using a different starting value for the LMFC counter
6-2	LMFC_CNT_INIT	R/W	0h	These bits set the initial value to which the LMFC count resets. The FORCE_LMFC_COUNT register bit must be enabled.
1-0	RELEASE_ILANE_REQ	R/W	0h	These bits delay the generation of the lane alignment sequence by 0, 1, 2, or 3 multi-frames after the code group synchronization. 0 : 0 multi-frames 1 : 1 multi-frame 2 : 2 multi-frames 3 : 3 multi-frames

7.6.1.1.4.5 Register 25h (address = 25h) [reset = 0h], SERDES_XX Page

Figure 111. Register 25h

7	6	5	4	3	2	1	0
SCR_EN	0	0	0	0	0	0	0
R/W-0h	R/W-0h	R/W-0h	R/W-0h	R/W-0h	R/W-0h	R/W-0h	R/W-0h

Table 43. Register 25h Field Descriptions

Bit	Field	Type	Reset	Description
7	SCR_EN	R/W	0h	This bit is the scramble enable bit in the JESD204B interface. 0 : Scrambling is disabled 1 : Scrambling is enabled
6-0	0	R/W	0h	Must read or write 0

7.6.1.1.4.6 Register 26h (address = 26h) [reset = 0h], SERDES_XX Page

Figure 112. Register 26h

7	6	5	4	3	2	1	0
0	0	0	K_NO_OF_FRAMES_PER_MULTIFRAME				
R/W-0h	R/W-0h	R/W-0h	R/W-0h				

Table 44. Register 26h Field Descriptions

Bit	Field	Type	Reset	Description
7-5	0	R/W	0h	Must read or write 0
4-0	K_NO_OF_FRAMES_PER_MULTIFRAME	R/W	0h	These bits set the number of frames per multi-frame. The K value used is set value + 1 (for example, if the set value is 0xF, then K = 16).

Copyright © 2017, Texas Instruments Incorporated

7.6.1.1.4.7 Register 28h (address = 28h) [reset = 0h], SERDES_XX Page

Figure 113. Register 28h

7	6	5	4	3	2	1	0
0	0	0	0	CTRL_LID	0	0	0
R/W-0h	R/W-0h	R/W-0h	R/W-0h	R/W-0h	R/W-0h	R/W-0h	R/W-0h

Table 45. Register 28h Field Descriptions

Bit	Field	Type	Reset	Description
7-4	0	R/W	0h	Must read or write 0
3	CTRL_LID	R/W	0h	This bit is the enable bit to program the lane ID (LID). 0 : Default LID 1 : Enable LID programming
2-0	0	R/W	0h	Must read or write 0

7.6.1.1.4.8 Register 2Dh (address = 2Dh) [reset = 0h], SERDES_XX Page

Figure 114. Register 2Dh

7	6	5	4	3	2	1	0
LID1				LID2			
R/W-0h				R/W-0h			

Table 46. Register 2Dh Field Descriptions

Bit	Field	Type	Reset	Description
7-4	LID1	R/W	0h	Lane ID for channels A, C. Select SerDes AB for channel A and SerDes CD for channel C. Valid only when CTRL_LID = 1.
3-0	LID2	R/W	0h	Lane ID for channels B, D. Select SerDes AB for channel B and SerDes CD for channel D.

7.6.1.1.4.9 Register 36h (address = 36h) [reset = 0h], SERDES_XX Page

Figure 115. Register 36h

7	6	5	4	3	2	1	0
PRBS_MODE		0	0	0	0	0	0
R-0h		R/W-0h	R/W-0h	R/W-0h	R/W-0h	R/W-0h	R/W-0h

Table 47. Register 36h Field Descriptions

Bit	Field	Type	Reset	Description
7-6	PRBS_MODE	R	0h	These bits select the PRBS polynomial in the PRBS pattern mode. 0 : PRBS7 1 : PRBS15 2 : PRBS23 3 : PRBS31
5-0	0	R/W	0h	Must read or write 0

Copyright © 2017, Texas Instruments Incorporated

7.6.1.1.4.10 Register 41h (address = 41h) [reset = 0h], SERDES_XX Page

Figure 116. Register 41h

7	6	5	4	3	2	1	0
LANE_BONA				LANE_AONB			
R/W-0h				R/W-0h			

Table 48. Register 41h Field Descriptions

Bit	Field	Type	Reset	Description
7-4	LANE_BONA	R/W	0h	These bits enable lane swap. 0 : Default 10 : For SerDes AB, channel B on lane A; for SerDes CD, channel D on lane C Others: Do not use
3-0	LANE_AONB	R/W	0h	These bits enable lane swap. 0 : Default 10 : For SerDes AB, channel A on lane B; for SerDes CD, channel C on lane D Others: Do not use

7.6.1.1.4.11 Register 42h (address = 42h) [reset = 0h], SERDES_XX Page

Figure 117. Register 42h

7	6	5	4	3	2	1	0
0	0	0	0	INVERT_AC		INVERT_BD	
R/W-0h	R/W-0h	R/W-0h	R/W-0h	R/W-0h		R/W-0h	

Table 49. Register 42h Field Descriptions

Bit	Field	Type	Reset	Description
7-4	0	R/W	0h	Must read or write 0
3-2	INVERT_AC	R/W	0h	These bits invert lanes A and C. 0 : No inversion 3 : Data inversion on lane A, C Others: Do not use
1-0	INVERT_BD	R/W	0h	These bits invert lanes B and D. 0 : No inversion 3 : Data inversion on lane B, D Others: Do not use

Copyright © 2017, Texas Instruments Incorporated

7.6.1.1.5 CHX Page Register Description

7.6.1.1.5.1 Register 26h (address = 26h) [reset = 0h], CHX Page

Figure 118. Register 26h

7	6	5	4	3	2	1	0
0	0	0	0	0	0	GAINWORD	
R/W-0h	R/W-0h	R/W-0h	R/W-0h	R/W-0h	R/W-0h	R/W-0h	

Table 50. Register 26h Field Descriptions

Bit	Field	Type	Reset	Description
7-2	0	R/W	0h	Must read or write 0
1-0	GAINWORD	R/W	0h	These bits control the channel A gain word. 0 : 0 dB 1 : 1 dB 2 : 2 dB 3 : 3 dB

7.6.1.1.5.2 Register 27h (address = 27h) [reset = 0h], CHX Page

Figure 119. Register 27h

7	6	5	4	3	2	1	0
OVR_ENABLE	OVR_FAST_SEL	0	0	OVR_LSB1	0	OVR_LSB0	0
R/W-0h	R/W-0h	R/W-0h	R/W-0h	R/W-0h	R/W-0h	R/W-0h	R/W-0h

Table 51. Register 27h Field Descriptions

Bit	Field	Type	Reset	Description
7	OVR_ENABLE	R/W	0h	This bit enables or disables the OVR on the JESD lanes. 0 : Disables OVR 1 : Enables OVR
6	OVR_FAST_SEL	R/W	0h	This bit selects the fast or delay-matched OVR. 0 : Delay-matched OVR 1 : Fast OVR
5-4	0	R/W	0h	Must read or write 0
3	OVR_LSB1	R/W	0h	This bit selects either data or OVR on LSB1. 0 : Data selected 1 : OVR or FOVR selected
2	0	R/W	0h	Must read or write 0
1	OVR_LSB0	R/W	0h	This bit selects either data or OVR on LSB0. 0 : Data selected 1 : OVR or FOVR selected
0	0	R/W	0h	Must read or write 0

Copyright © 2017, Texas Instruments Incorporated

7.6.1.1.5.3 Register 2Dh (address = 2Dh) [reset = 0h], CHX Page

Figure 120. Register 2Dh

7	6	5	4	3	2	1	0
0	0	0	0	0	0	NYQUIST_SELECT	0
R/W-0h	R/W-0h	R/W-0h	R/W-0h	R/W-0h	R/W-0h	R/W-0h	R/W-0h

Table 52. Register 2Dh Field Descriptions

Bit	Field	Type	Reset	Description
7-2	0	R/W	0h	Must read or write 0
1	NYQUIST_SELECT	R/W	0h	This bit selects the Nyquist zone of operation for trim loading. 0 : Nyquist 1 1 : Nyquist 2
0	0	R/W	0h	Must read or write 0

7.6.1.1.5.4 Register 78h (address = 78h) [reset = 0h], CHX Page

Figure 121. Register 78h

7	6	5	4	3	2	1	0
0	0	0	0	0	FS4_SIGN	NYQ_SEL_MODE02	NYQ_SEL
R/W-0h	R/W-0h	R/W-0h	R/W-0h	R/W-0h	R/W-0h	R/W-0h	R/W-0h

Table 53. Register 78h Field Descriptions

Bit	Field	Type	Reset	Description
7-3	0	R/W	0h	Must read or write 0
2	FS4_SIGN	R/W	0h	This bit controls the sign of mixing in mode 0. 0 : Centered at $-f_S / 4$ 1 : Centered at $f_S / 4$
1	NYQ_SEL_MODE02	R/W	0h	This bit selects the pass band of the decimation filter in mode 2. 0 : Low pass 1 : High pass
0	NYQ_SEL	R/W	0h	This bit selects the pass band of the filter before the DDC. 0 : LPF ($0 – f_S / 2$) 1 : HPF ($0 – f_S / 2$)

Copyright © 2017, Texas Instruments Incorporated

7.6.1.1.5.5 Register 7Ah (address = 7Ah) [reset = 0h], CHX Page

Figure 122. Register 7Ah

7	6	5	4	3	2	1	0
NCO_WORD[15:8]							
R/W-0h							

Table 54. Register 7Ah Field Descriptions

Bit	Field	Type	Reset	Description
7-0	NCO_WORD[15:8]	R/W	0h	These bits set the NCO frequency word. 0 : 0 × f_S / 2^{16} 1 : 1 × f_S / 2^{16} 2 : 2 × f_S / 2^{16} 3 : 3 × f_S / 2^{16} 5 : 5 × f_S / 2^{16} 6 : 6 × f_S / 2^{16} … 65535 : 65535 × f_S / 2^{16}

7.6.1.1.5.6 Register 7Bh (address = 7Bh) [reset = 0h], CHX Page

Figure 123. Register 7Bh

7	6	5	4	3	2	1	0
NCO_WORD[7:0]							
R/W-0h							

Table 55. Register 7Bh Field Descriptions

Bit	Field	Type	Reset	Description
7-0	NCO_WORD[7:0]	R/W	0h	These bits set the NCO frequency word. 0 : 0 × f_S / 2^{16} 1 : 1 × f_S / 2^{16} 2 : 2 × f_S / 2^{16} 3 : 3 × f_S / 2^{16} 5 : 5 × f_S / 2^{16} 6 : 6 × f_S / 2^{16} … 65535 : 65535 × f_S / 2^{16}

Copyright © 2017, Texas Instruments Incorporated

7.6.1.1.5.7 Register 7Eh (address = 7Eh) [reset = 3h], CHX Page

Figure 124. Register 7Eh

7	6	5	4	3	2	1	0
0	0	0	0	0	MODE467_GAIN	MODE0_GAIN	MODE13_GAIN
R/W-0h	R/W-0h	R/W-0h	R/W-0h	R/W-0h	R/W-0h	R/W-1h	R/W-1h

Table 56. Register 7Eh Field Descriptions

Bit	Field	Type	Reset	Description
7-3	0	R/W	0h	Must read or write 0
2	MODE467_GAIN	R/W	0h	This bit sets the mixer loss compensation for modes 4, 6, and 7. 0 : No gain 1 : 6-dB gain
1	MODE0_GAIN	R/W	1h	This bit sets the mixer loss compensation for mode 0. 0 : No gain 1 : 6-dB gain
0	MODE13_GAIN	R/W	1h	This bit sets the mixer loss compensation for modes 1 and 3. 0 : No gain 1 : 6-dB gain

7.6.1.1.6 ADCXX Page Register Description

7.6.1.1.6.1 Register 07h (address = 07h) [reset = FFh], ADCXX Page

Figure 125. Register 7h

7	6	5	4	3	2	1	0
FAST_OVR_THRESHOLD_HIGH							
R/W-FFh							

Table 57. Register 07h Field Descriptions

Bit	Field	Type	Reset	Description
7-0	FAST_OVR_THRESHOLD_HIGH	R/W	FFh	Fast OVR threshold high; see the *Overrange Indication* section for programming.

7.6.1.1.6.2 Register 08h (address = 08h) [reset = 0h], ADCXX Page

Figure 126. Register 8h

7	6	5	4	3	2	1	0
FAST_OVR_THRESHOLD_LOW							
R/W-0h							

Table 58. Register 08h Field Descriptions

Bit	Field	Type	Reset	Description
7-0	FAST_OVR_THRESHOLD_LOW	R/W	0h	Fast OVR threshold low; see the *Overrange Indication* section for programming.

Copyright © 2017, Texas Instruments Incorporated

7.6.1.1.6.3 Register D5h (address = D5h) [reset = 0h], ADCXX Page

Figure 127. Register D5h

7	6	5	4	3	2	1	0
0	0	0	0	CAL_EN	0	0	0
R/W-0h	R/W-0h	R/W-0h	R/W-0h	R/W-0h	R/W-0h	R/W-0h	R/W-0h

Table 59. Register D5h Field Descriptions

Bit	Field	Type	Reset	Description
7-4	0	R/W	0h	Must read or write 0
3	CAL_EN	R/W	0h	This bit is the enable calibration bit. This bit must be toggled during the startup sequence. 0 : Disables calibration 1 : Enables calibration
2-0	0	R/W	0h	Must read or write 0

7.6.1.1.6.4 Register 2Ah (address = 2Ah) [reset = 0h], ADCXX Page

Figure 128. Register 2Ah

7	6	5	4	3	2	1	0
0	0	0	0	0	0	0	ADC_TRIM1
R/W-0h	R/W-0h	R/W-0h	R/W-0h	R/W-0h	R/W-0h	R/W-0h	R/W-0h

Table 60. Register 2Ah Field Descriptions

Bit	Field	Type	Reset	Description
7-1	0	R/W	0h	Must read or write 0
0	ADC Trim1	R/W	1h	Always write 0

7.6.1.1.6.5 Register CFh (address = CFh) [reset = 0h], ADCXX Page

Figure 129. Register CFh

7	6	5	4	3	2	1	0
ADC_TRIM2				0	0	0	0
R/W-0h				R/W-0h	R/W-0h	R/W-0h	R/W-0h

Table 61. Register CFh Field Descriptions

Bit	Field	Type	Reset	Description
7-4	ADC_TRIM2	R/W	0h	Always write 5
3-0	0	R/W	0h	Must read or write 0

Copyright © 2017, Texas Instruments Incorporated

8 Application and Implementation

NOTE

Information in the following applications sections is not part of the TI component specification, and TI does not warrant its accuracy or completeness. TI's customers are responsible for determining suitability of components for their purposes. Customers should validate and test their design implementation to confirm system functionality.

8.1 Application Information

8.1.1 Start-Up Sequence

Table 62 lists the recommended start-up sequence for a 500-MSPS, Nyquist 2 operation with DDC mode 8 enabled.

Table 62. Recommended Start-Up Sequence for 500-MSPS, Nyquist 2, DDC Bypass Mode (Mode 8) Operation

STEP	DESCRIPTION	REGISTER ADDRESS	REGISTER DATA	COMMENT
1	Provide a 1.15-V power supply (AVDD, DVDD)	—	—	—
2	Provide a 1.9-V power supply (AVDD19)	—	—	A 1.15-V supply must be supplied first for proper operation.
3	Provide a clock to CLKINM, CLKINP and a SYSREF signal to SYSREFM, SYSREFP	—	—	SYSREF must be established before SPI programming.
4	Pulse a reset (low to high to low) via a hardware reset (pin 48), wait 100 µs	—	—	Hardware reset loads all trim register settings.
5	Issue a software reset to initialize the registers	00h	81h	—
6	Set the high SNR mode for channel pairs AB and CD, select trims for 500-MSPS operation	11h	00h	Select the DIGTOP page.
		12h	01h	
		13h	00h	
		ABh	01h	Set the high SNR mode for channels A and B.
		ACh	01h	Set the high SNR mode for channels C and D.
		ADh	08h	Select DDC bypass mode (mode 8) for channels A and B.
		AEh	08h	Select DDC bypass mode (mode 8) for channels C and D.
		64h	02h	Select trims for 500-MSPS operation.
7	Set up the SerDes configuration	11h	00h	Select the SerDes_AB and SerDes_CD pages.
		12h	60h	
		13h	00h	
		26h	0Fh	Set the K value to 16 frames per multi-frame.
		20h	80h	Enable the K value from register 26h.
8	ADC calibration	11h	FFh	Select the ADC_A1, ADC_A2, ADC_B1, ADC_B2, ADC_C1, ADC_C2, ADC_D1, and ADC_D2 pages.
		12h	00h	
		13h	00h	
		D5h	08h	Enable ADC calibration.
		Wait 2 ms		ADC calibration time.
		D5h	00h	Disable ADC calibration.
		2Ah	00h	Internal trims.
		CFh	50h	
9	Select trims for the second Nyquist	11h	00h	Select the channel A, channel B, channel C, and channel D pages.
		12h	1Eh	
		13h	00h	
		2Dh	02h	Select trims for the second Nyquist.

Copyright © 2017, Texas Instruments Incorporated

Application Information (continued)

Table 62. Recommended Start-Up Sequence for 500-MSPS, Nyquist 2, DDC Bypass Mode (Mode 8) Operation (continued)

STEP	DESCRIPTION	REGISTER ADDRESS	REGISTER DATA	COMMENT
10	Load linearity trims	11h	00h	Select the DIGTOP page.
		12h	01h	
		13h	00h	
		8Ch	02h	Load linearity trims.
		B7h	01h	
		B7h	00h	
11	Disable SYSREF	11h	00h	Select the ANALOG page.
		12h	00h	
		13h	01h	
		6Ah	02h	Disable SYSREF.

Table 63 lists the recommended start-up sequence for a 500-MSPS, Nyquist 2, 2x interleaved dual ADC operation.

Table 63. Recommended Start-Up Sequence for 500-MSPS, Nyquist 2, 2x Interleaved Dual ADC Operation

STEP	DESCRIPTION	REGISTER ADDRESS	REGISTER DATA	COMMENT
1	Provide a 1.15-V power supply (AVDD, DVDD)	—	—	—
2	Provide a 1.9-V power supply (AVDD19)	—	—	A 1.15-V supply must be supplied first for proper operation.
3	Provide a clock to CLKINM, CLKINP and a SYSREF signal to SYSREFM, SYSREFP	—	—	SYSREF must be established before SPI programming.
4	Pulse a reset (low to high to low) via a hardware reset (pin 48), wait 100 µs	—	—	Hardware reset loads all trim register settings.
5	Issue a software reset to initialize the registers	00h	81h	—
6	Set the high SNR mode for channel pairs AB and CD, select trims for 500-MSPS operation	11h	00h	Select the DIGTOP page.
		12h	01h	
		13h	00h	
		A5h	03h	Enable averaging on the AB and CD channel pair.
		A6h	20h	Enable the averaging option.
		ABh	03h	Set the high SNR and interleave mode for channels A and B.
		ACh	03h	Set the high SNR and interleave mode for channels C and D.
		ADh	08h	Select DDC bypass mode (mode 8) for channels A and B.
		AEh	08h	Select DDC bypass mode (mode 8) for channels C and D.
		64h	02h	Select trims for 500-MSPS operation.
7	Set up the SerDes configuration	11h	00h	Select the SERDES_AB and SERDES_CD pages.
		12h	60h	
		13h	00h	
		26h	0Fh	Set the K value to 16 frames per multi-frame.
		20h	80h	Enable the K value from register 26h.

Copyright © 2017, Texas Instruments Incorporated

Table 63. Recommended Start-Up Sequence for 500-MSPS, Nyquist 2, 2x Interleaved Dual ADC Operation (continued)

STEP	DESCRIPTION	REGISTER ADDRESS	REGISTER DATA	COMMENT
8	ADC calibration	11h	FFh	Select the ADC_A1, ADC_A2, ADC_B1, ADC_B2, ADC_C1, ADC_C2, ADC_D1, and ADC_D2 pages.
		12h	00h	
		13h	00h	
		D5h	08h	Enable ADC calibration.
		Wait 2 ms		ADC calibration time.
		D5h	00h	Disable ADC calibration.
		2Ah	00h	Internal trims.
		CFh	50h	
9	Select trims for the second Nyquist	11h	00h	Select the channel A, channel B, channel C, and channel D pages.
		12h	1Eh	
		13h	00h	
		2Dh	02h	Select trims for the second Nyquist.
10	Load linearity trims	11h	00h	Select the DIGTOP page.
		12h	01h	
		13h	00h	
		8Ch	02h	Load linearity trims.
		B7h	01h	
		B7h	00h	
11	Disable SYSREF	11h	00h	Select the ANALOG page.
		12h	00h	
		13h	01h	
		6Ah	02h	Disable SYSREF.

Copyright © 2017, Texas Instruments Incorporated

8.1.2 Hardware Reset

Figure 130 shows the timing information for the hardware reset.

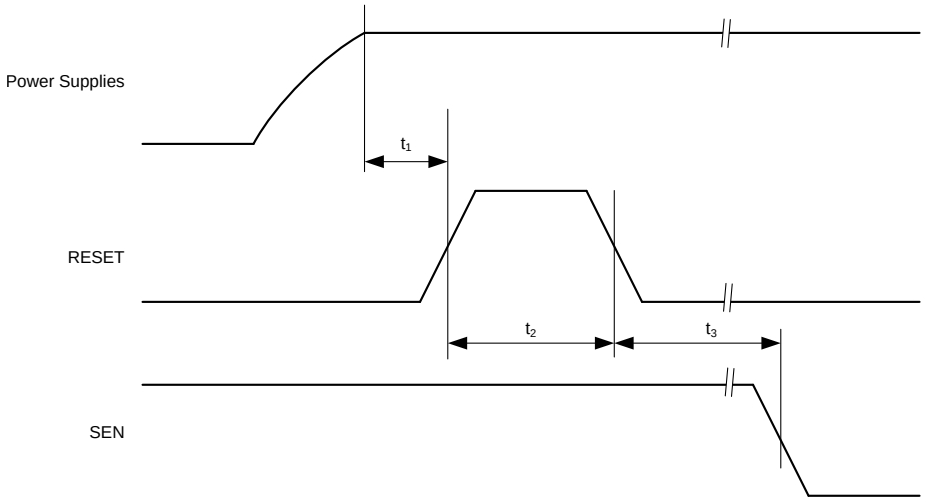

Figure 130. Hardware Reset Timing Diagram

Table 64. Timing Requirements for Figure 130

		MIN	TYP	MAX	UNIT
t_1	Power-on delay from power-up to an active high RESET pulse	1			ms
t_2	Reset pulse duration: active high RESET pulse duration	10			ns
t_3	Register write delay from RESET disable to SEN active	100			µs

8.1.3 Frequency Planning

The ADS54J64 uses an architecture where the ADCs are 2x interleaved followed by a digital decimation by 2. The 2x interleaved and decimation architecture comes with a unique advantage of improved linearity resulting from frequency planning. Frequency planning refers to choosing the clock frequency and signal band appropriately such that the harmonic distortion components, resulting from the analog front-end (LNA, PGA), can be made to fall outside the decimation filter pass band. In absence of the 2x interleave and decimation architecture, these components alias back in band and limit the performance of the signal chain. For example, for f_{CLK} = 983.04 MHz and f_{IN} = 184.32 MHz:

Second-order harmonic distortion (HD2) = 2 × 184.32 = 368.64 MHz

Pass band of the 2x decimation filter = 0 MHz to 245.76 MHz (0 to f_{CLK} / 4)

The second-order harmonic performance improves by the stop-band attenuation of the filter (approximately 40 dBc) because the second-order harmonic frequency is outside the pass band of the decimation filter.

Copyright © 2017, Texas Instruments Incorporated

Figure 131 shows the harmonic components (HD2–HD5) that fall in the decimation pass band for the input clock rate (f_{CLK}) of the 983.04-MHz and 100-MHz signal band around the center frequency of 184.32 MHz.

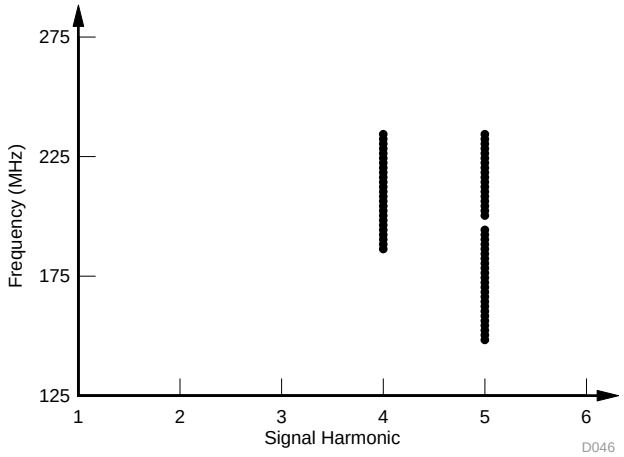

NOTE: f_{CLK} = 983.04 MHz, signal band = 134.32 MHz to 234.32 MHz.

Figure 131. In-Band Harmonics for a Frequency Planned System

As shown in Figure 131, both HD2 and HD3 are completely out of band. HD4 and HD5 fall in the decimation pass band for some frequencies of the input signal band.

Through proper frequency planning, the specifications of the ADC antialias filter can be relaxed.

8.1.4 SNR and Clock Jitter

The signal-to-noise ratio of the ADC is limited by three different factors (as shown in Equation 3): the quantization noise is typically not noticeable in pipeline converters and is 84 dB for a 14-bit ADC. The thermal noise limits the SNR at low input frequencies and the clock jitter sets the SNR for higher input frequencies.

$$SNR_{ADC}[dBc] = -20log\sqrt{\left(10^{-\frac{SNR_{Quantization\ Noise}}{20}}\right)^2 + \left(10^{-\frac{SNR_{Thermal\ Noise}}{20}}\right)^2 + \left(10^{-\frac{SNR_{Jitter}}{20}}\right)^2} \quad (3)$$

Equation 4 calculates the SNR limitation resulting from sample clock jitter:

$$SNR_{Jitter}[dBc] = -20log\left(2\pi \times f_{in} \times T_{Jitter}\right) \quad (4)$$

The total clock jitter (T_{Jitter}) has two components: the internal aperture jitter (100 f_S for the ADS54J64) that is set by the noise of the clock input buffer and the external clock jitter. Equation 5 calculates T_{Jitter}:

$$T_{Jitter} = \sqrt{\left(T_{Jitter,\ Ext_Clock_Input}\right)^2 + \left(T_{Aperture_ADC}\right)^2} \quad (5)$$

External clock jitter can be minimized by using high-quality clock sources and jitter cleaners as well as band-pass filters at the clock input; a faster clock slew rate also improves the ADC aperture jitter.

The ADS54J64 has a thermal noise of approximately 70 dBFS and an internal aperture jitter of 100 f_S.

Copyright © 2017, Texas Instruments Incorporated

8.1.5 ADC Test Pattern

The ADS54J64 provides several different options to output test patterns instead of the actual output data of the ADC in order to simplify debugging of the JESD204B digital interface link. Figure 132 shows the output data path.

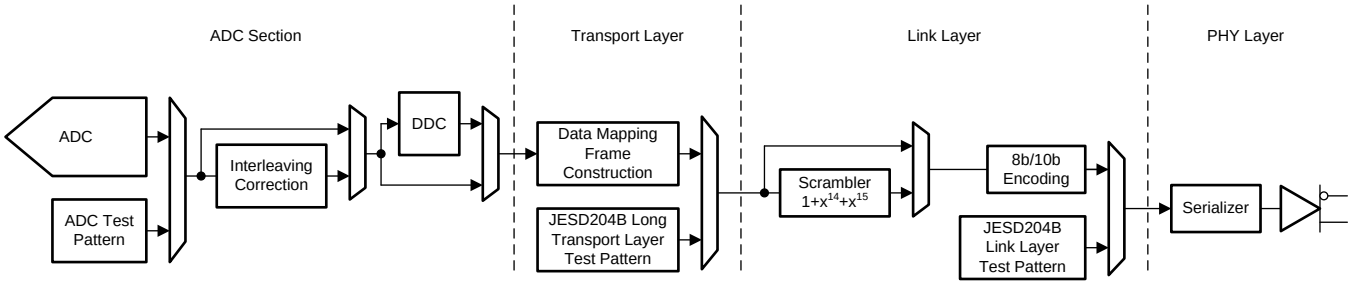

Copyright © 2017, Texas Instruments Incorporated

Figure 132. ADC Test Pattern

8.1.5.1 ADC Section

The ADC test pattern replaces the actual output data of the ADC. These test patterns can be programmed using register 91h of the DIGTOP page. Table 65 lists the supported test patterns.

Table 65. ADC Test Pattern Settings

BIT	NAME	DEFAULT	DESCRIPTION
7-4	TESTPATTERNSELECT	0000	These bits select the test pattern on the output when the test pattern is enabled for a suitable channel. 0 : Default 1 : All zeros 2 : All ones 3 : Toggle pattern 4 : Ramp pattern 6 : Custom pattern 1 7 : Toggles between custom pattern 1 and custom pattern 2 8 : Deskew pattern (AAAAh)

8.1.5.2 Transport Layer Pattern

The transport layer maps the ADC output data into 8-bit octets and constructs the JESD204B frames using the LMFS parameters. Tail bits or 0s are added when needed. Alternatively, as shown in Table 66, the JESD204B long transport layer test pattern can be substituted by programming register 20h.

Table 66. Transport Layer Test Mode

BIT	NAME	DEFAULT	DESCRIPTION
4	TRANS_TEST_EN	0	This bit generates the long transport layer test pattern mode according to clause 5.1.6.3 of the JESD204B specification. 0 = Test mode disabled 1 = Test mode enabled

8.1.5.3 Link Layer Pattern

The link layer contains the scrambler and the 8b, 10b encoding of any data passed on from the transport layer. Additionally, the link layer also handles the initial lane alignment sequence that can be manually restarted. The link layer test patterns are intended for testing the quality of the link (jitter testing and so forth). The test patterns do not pass through the 8b, 10b encoder. These test patterns can be used by programming register 22h of the SERDES_XX page. Table 67 shows the supported programming options.

Table 67. Link Layer Test Mode

BIT	NAME	DEFAULT	DESCRIPTION
7-5	LINK_LAYER_TESTMODE_SEL	000	These bits generate a pattern according to clause 5.3.3.8.2 of the JESD204B document. 0 : Normal ADC data 1 : D21.5 (high-frequency jitter pattern) 2 : K28.5 (mixed-frequency jitter pattern) 3 : Repeats initial lane alignment (generates a K28.5 character and continuously repeats lane alignment sequences) 4 : 12-octet RPAT jitter pattern 6 : PRBS pattern (PRBS7,15,23,31); use PRBS mode (register 36h) to select the PRBS pattern

Copyright © 2017, Texas Instruments Incorporated

8.2 Typical Application

The ADS54J64 is designed for wideband receiver applications demanding excellent dynamic range over a large input frequency range. Figure 133 shows a typical schematic for an ac-coupled dual receiver [dual field-programmable gate array (FPGA) with a dual SYNC].

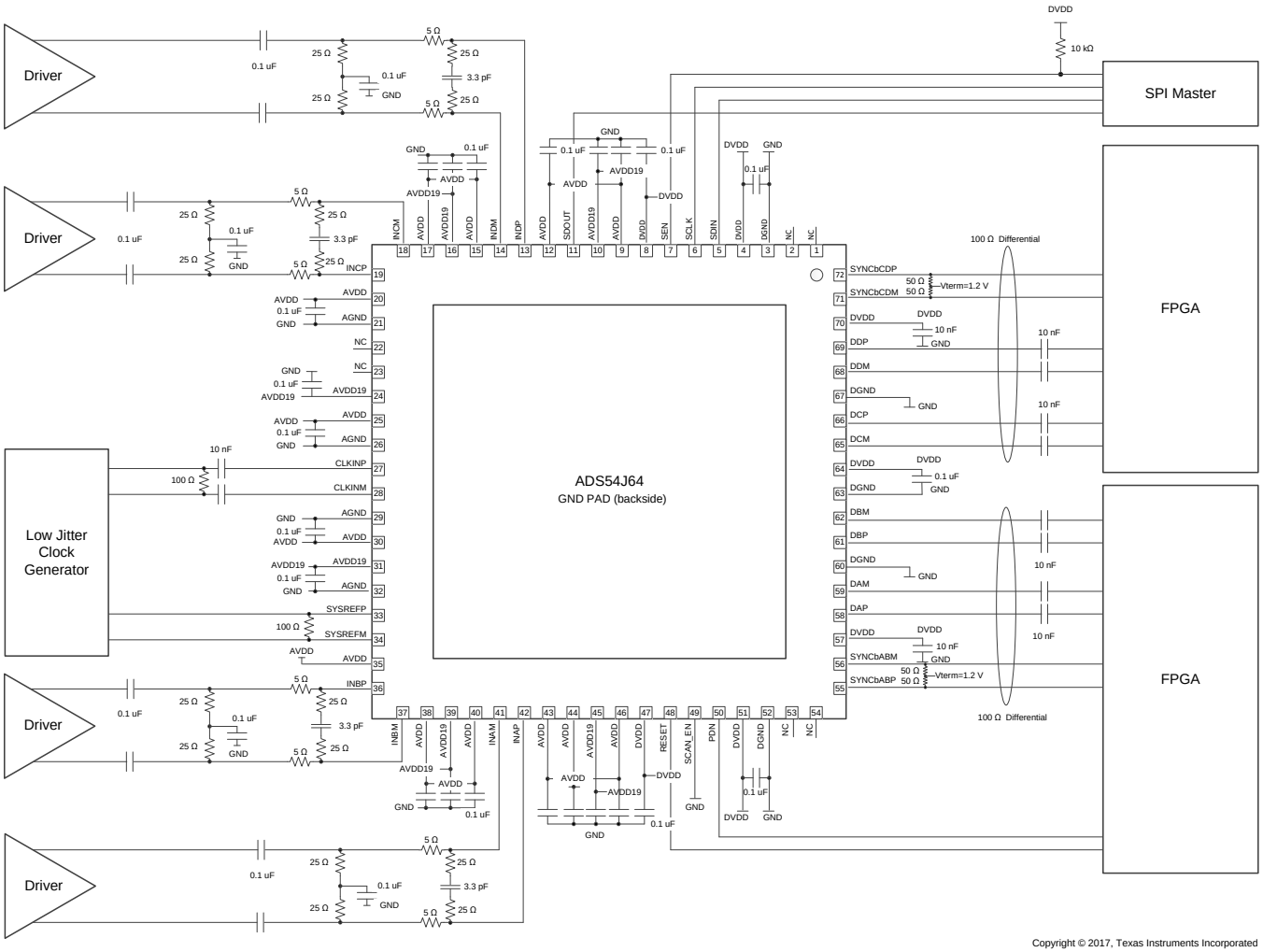

NOTE: GND = AGND and DGND are connected in the PCB layout.

Figure 133. Application Diagram for the ADS54J64

8.2.1 Design Requirements

By using the simple drive circuit of Figure 133 (when the amplifier drives the ADC) or Figure 46 (when transformers drive the ADC), uniform performance can be obtained over a wide frequency range. The buffers present at the analog inputs of the device help isolate the external drive source from the switching currents of the sampling circuit.

8.2.2 Detailed Design Procedure

For optimum performance, the analog inputs must be driven differentially. This architecture improves the common-mode noise immunity and even-order harmonic rejection. A small resistor (5 Ω to 10 Ω) in series with each input pin, as shown in Figure 133, is recommended to damp out ringing caused by package parasitics.

Typical Application (continued)

8.2.3 Application Curves

Figure 134 and Figure 135 show the typical performance at 190 MHz and 230 MHz, respectively.

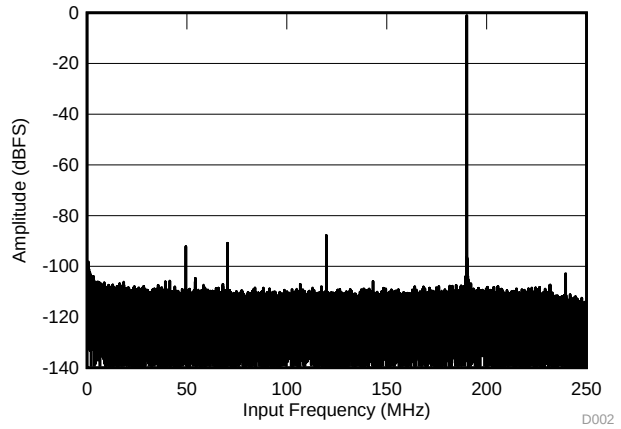

f_{IN} = 190 MHz, A_{IN} = –1 dBFS,
SNR = 69.4 dBFS, SFDR = 88 dBc, SFDR = 96 dBc (non 23)

Figure 134. FFT for 190-MHz Input Signal

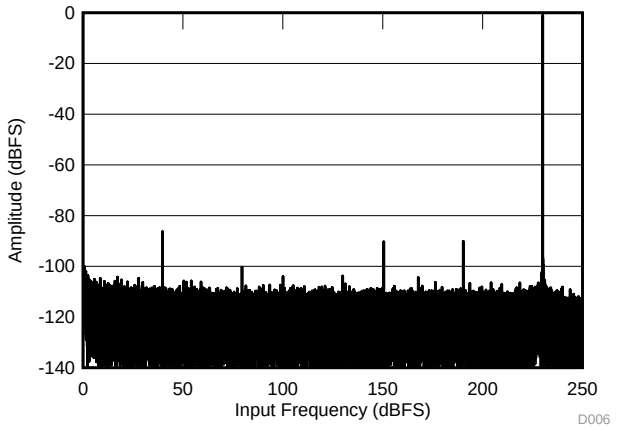

f_{IN} = 230 MHz, A_{IN} = –1 dBFS,
SNR = 69.4 dBFS, SFDR = 85 dBc, SFDR = 96 dBc (non 23)

Figure 135. FFT for 230-MHz Input Signal

9 Power Supply Recommendations

The device requires a 1.15-V nominal supply for DVDD, a 1.15-V nominal supply for AVDD, and a 1.9-V nominal supply for AVDD19. AVDD and DVDD are recommended to be powered up the before the AVDD19 supply for reliable loading of factory trims.

Copyright © 2017, Texas Instruments Incorporated

10 Layout

10.1 Layout Guidelines

The device evaluation module (EVM) layout can be used as a reference layout to obtain the best performance. Figure 136 shows a layout diagram of the EVM top layer. A complete layout of the EVM is available at the ADS54J64 EVM folder. Some important points to remember during board layout are:

- Analog inputs are located on opposite sides of the device pinout to ensure minimum crosstalk on the package level. To minimize crosstalk onboard, the analog inputs must exit the pinout in opposite directions, as shown in the reference layout of Figure 136 as much as possible.
- In the device pinout, the sampling clock is located on a side perpendicular to the analog inputs in order to minimize coupling between them. This configuration is also maintained on the reference layout of Figure 136 as much as possible.
- Keep digital outputs away from the analog inputs. When these digital outputs exit the pinout, the digital output traces must not be kept parallel to the analog input traces because this configuration can result in coupling from the digital outputs to the analog inputs and degrade performance. All digital output traces to the receiver [such as an FPGA or an application-specific integrated circuit (ASIC)] must be matched in length to avoid skew among outputs.
- At each power-supply pin (AVDD, DVDD, or AVDD19), keep a 0.1-µF decoupling capacitor close to the device. A separate decoupling capacitor group consisting of a parallel combination of 10-µF, 1-µF, and 0.1-µF capacitors can be kept close to the supply source.

10.2 Layout Example

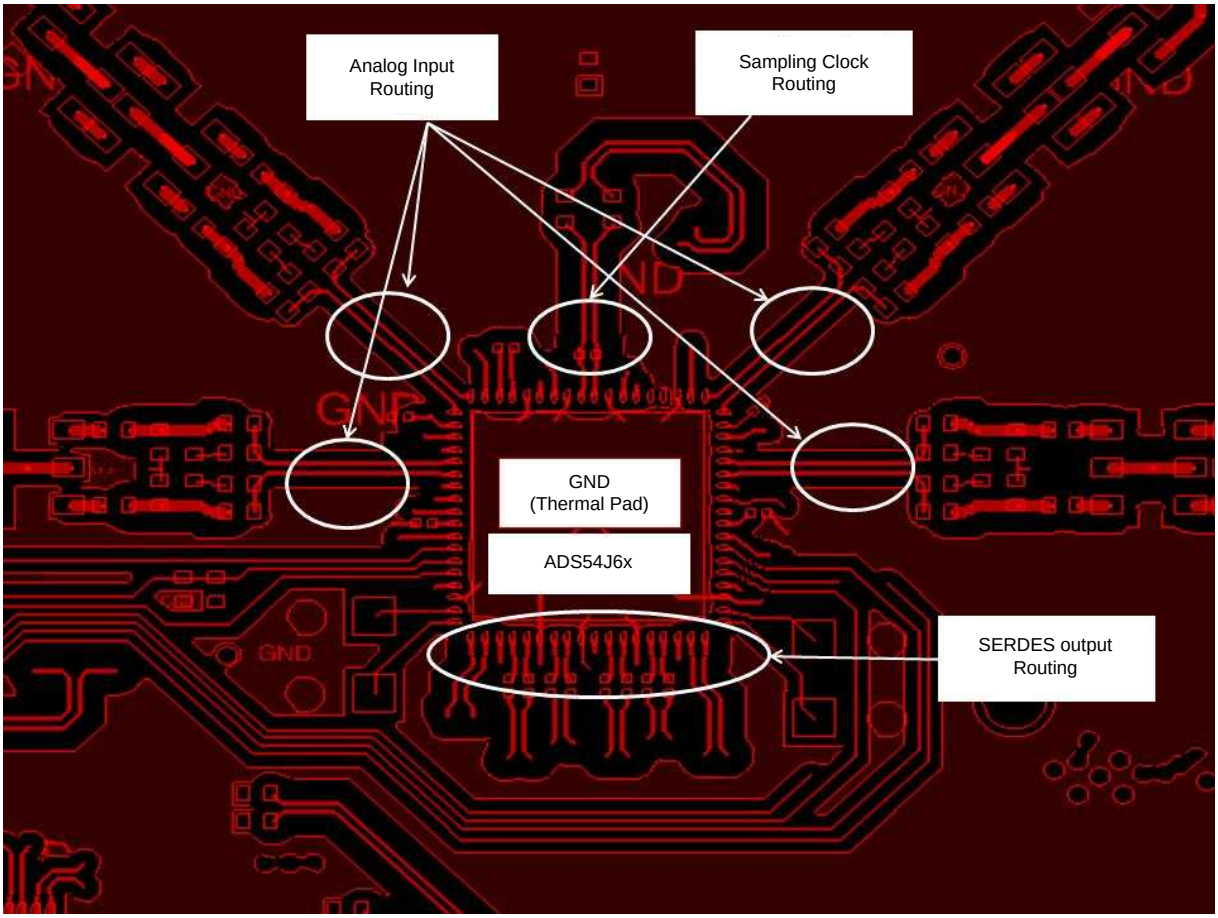

Figure 136. ADS54J64EVM Layout

11 Device and Documentation Support

11.1 Receiving Notification of Documentation Updates

To receive notification of documentation updates, navigate to the device product folder on ti.com. In the upper right corner, click on *Alert me* to register and receive a weekly digest of any product information that has changed. For change details, review the revision history included in any revised document.

11.2 Community Resources

The following links connect to TI community resources. Linked contents are provided "AS IS" by the respective contributors. They do not constitute TI specifications and do not necessarily reflect TI's views; see TI's Terms of Use.

TI E2E™ Online Community ***TI's Engineer-to-Engineer (E2E) Community.*** Created to foster collaboration among engineers. At e2e.ti.com, you can ask questions, share knowledge, explore ideas and help solve problems with fellow engineers.

Design Support ***TI's Design Support*** Quickly find helpful E2E forums along with design support tools and contact information for technical support.

11.3 Trademarks

E2E is a trademark of Texas Instruments.
All other trademarks are the property of their respective owners.

11.4 Electrostatic Discharge Caution



This integrated circuit can be damaged by ESD. Texas Instruments recommends that all integrated circuits be handled with appropriate precautions. Failure to observe proper handling and installation procedures can cause damage.

ESD damage can range from subtle performance degradation to complete device failure. Precision integrated circuits may be more susceptible to damage because very small parametric changes could cause the device not to meet its published specifications.

11.5 Glossary

SLYZ022 — *TI Glossary*.

This glossary lists and explains terms, acronyms, and definitions.

12 Mechanical, Packaging, and Orderable Information

The following pages include mechanical, packaging, and orderable information. This information is the most current data available for the designated devices. This data is subject to change without notice and revision of this document. For browser-based versions of this data sheet, refer to the left-hand navigation.

Copyright © 2017, Texas Instruments Incorporated

PACKAGING INFORMATION

Orderable part number	Status (1)	Material type (2)	Package | Pins	Package qty | Carrier	RoHS (3)	Lead finish/ Ball material (4)	MSL rating/ Peak reflow (5)	Op temp (°C)	Part marking (6)
ADS54J64IRMP	Active	Production	VQFN (RMP) | 72	168 | JEDEC TRAY (5+1)	Yes	NIPDAU	Level-3-260C-168 HR	-40 to 85	AZ54J64
ADS54J64IRMP.A	Active	Production	VQFN (RMP) | 72	168 | JEDEC TRAY (5+1)	Yes	NIPDAU	Level-3-260C-168 HR	-40 to 85	AZ54J64
ADS54J64IRMPG4	Active	Production	VQFN (RMP) | 72	168 | JEDEC TRAY (5+1)	Yes	NIPDAU	Level-3-260C-168 HR	-40 to 85	AZ54J64
ADS54J64IRMPG4.A	Active	Production	VQFN (RMP) | 72	168 | JEDEC TRAY (5+1)	Yes	NIPDAU	Level-3-260C-168 HR	-40 to 85	AZ54J64
ADS54J64IRMPT	Active	Production	VQFN (RMP) | 72	250 | SMALL T&R	Yes	NIPDAU	Level-3-260C-168 HR	-40 to 85	AZ54J64
ADS54J64IRMPT.A	Active	Production	VQFN (RMP) | 72	250 | SMALL T&R	Yes	NIPDAU	Level-3-260C-168 HR	-40 to 85	AZ54J64

(1) **Status:** For more details on status, see our product life cycle.

(2) **Material type:** When designated, preproduction parts are prototypes/experimental devices, and are not yet approved or released for full production. Testing and final process, including without limitation quality assurance, reliability performance testing, and/or process qualification, may not yet be complete, and this item is subject to further changes or possible discontinuation. If available for ordering, purchases will be subject to an additional waiver at checkout, and are intended for early internal evaluation purposes only. These items are sold without warranties of any kind.

(3) **RoHS values:** Yes, No, RoHS Exempt. See the TI RoHS Statement for additional information and value definition.

(4) **Lead finish/Ball material:** Parts may have multiple material finish options. Finish options are separated by a vertical ruled line. Lead finish/Ball material values may wrap to two lines if the finish value exceeds the maximum column width.

(5) **MSL rating/Peak reflow:** The moisture sensitivity level ratings and peak solder (reflow) temperatures. In the event that a part has multiple moisture sensitivity ratings, only the lowest level per JEDEC standards is shown. Refer to the shipping label for the actual reflow temperature that will be used to mount the part to the printed circuit board.

(6) **Part marking:** There may be an additional marking, which relates to the logo, the lot trace code information, or the environmental category of the part.

Multiple part markings will be inside parentheses. Only one part marking contained in parentheses and separated by a "~" will appear on a part. If a line is indented then it is a continuation of the previous line and the two combined represent the entire part marking for that device.

Important Information and Disclaimer: The information provided on this page represents TI's knowledge and belief as of the date that it is provided. TI bases its knowledge and belief on information provided by third parties, and makes no representation or warranty as to the accuracy of such information. Efforts are underway to better integrate information from third parties. TI has taken and continues to take reasonable steps to provide representative

and accurate information but may not have conducted destructive testing or chemical analysis on incoming materials and chemicals. TI and TI suppliers consider certain information to be proprietary, and thus CAS numbers and other limited information may not be available for release.

In no event shall TI's liability arising out of such information exceed the total purchase price of the TI part(s) at issue in this document sold by TI to Customer on an annual basis.

TAPE AND REEL INFORMATION

REEL DIMENSIONS

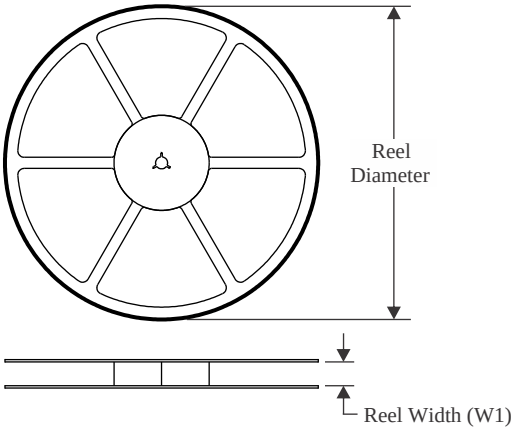

TAPE DIMENSIONS

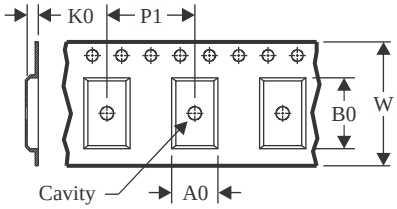

A0	Dimension designed to accommodate the component width
B0	Dimension designed to accommodate the component length
K0	Dimension designed to accommodate the component thickness
W	Overall width of the carrier tape
P1	Pitch between successive cavity centers

QUADRANT ASSIGNMENTS FOR PIN 1 ORIENTATION IN TAPE

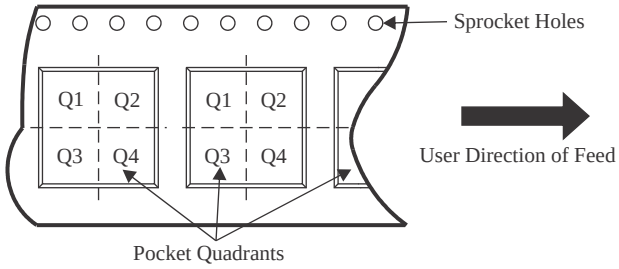

*All dimensions are nominal

Device	Package Type	Package Drawing	Pins	SPQ	Reel Diameter (mm)	Reel Width W1 (mm)	A0 (mm)	B0 (mm)	K0 (mm)	P1 (mm)	W (mm)	Pin1 Quadrant
ADS54J64IRMPT	VQFN	RMP	72	250	180.0	24.4	10.25	10.25	2.25	16.0	24.0	Q2

TAPE AND REEL BOX DIMENSIONS

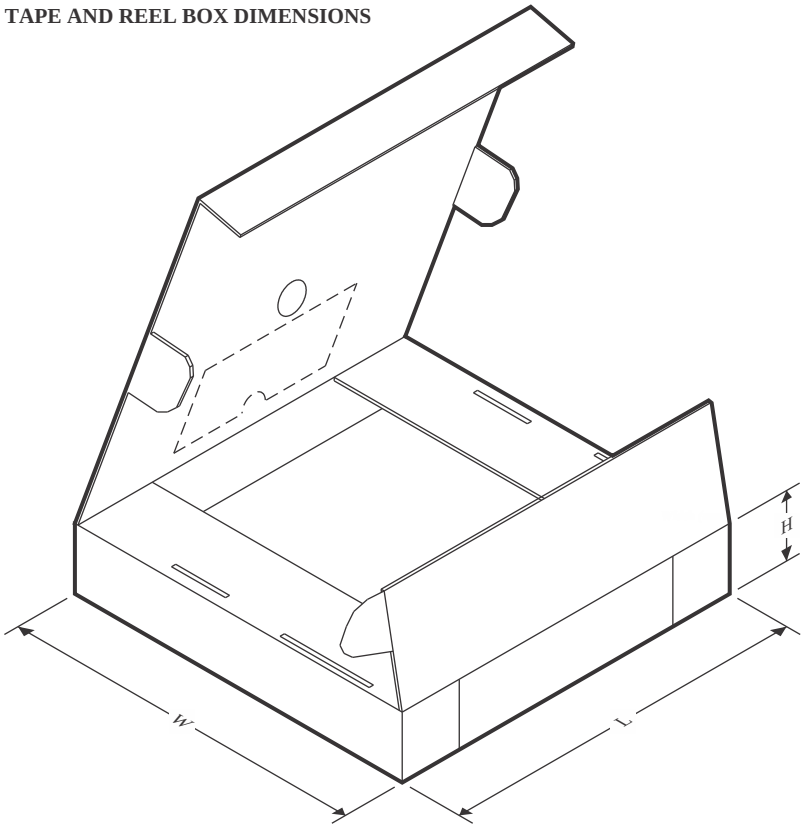

*All dimensions are nominal

Device	Package Type	Package Drawing	Pins	SPQ	Length (mm)	Width (mm)	Height (mm)
ADS54J64IRMPT	VQFN	RMP	72	250	213.0	191.0	55.0

TRAY

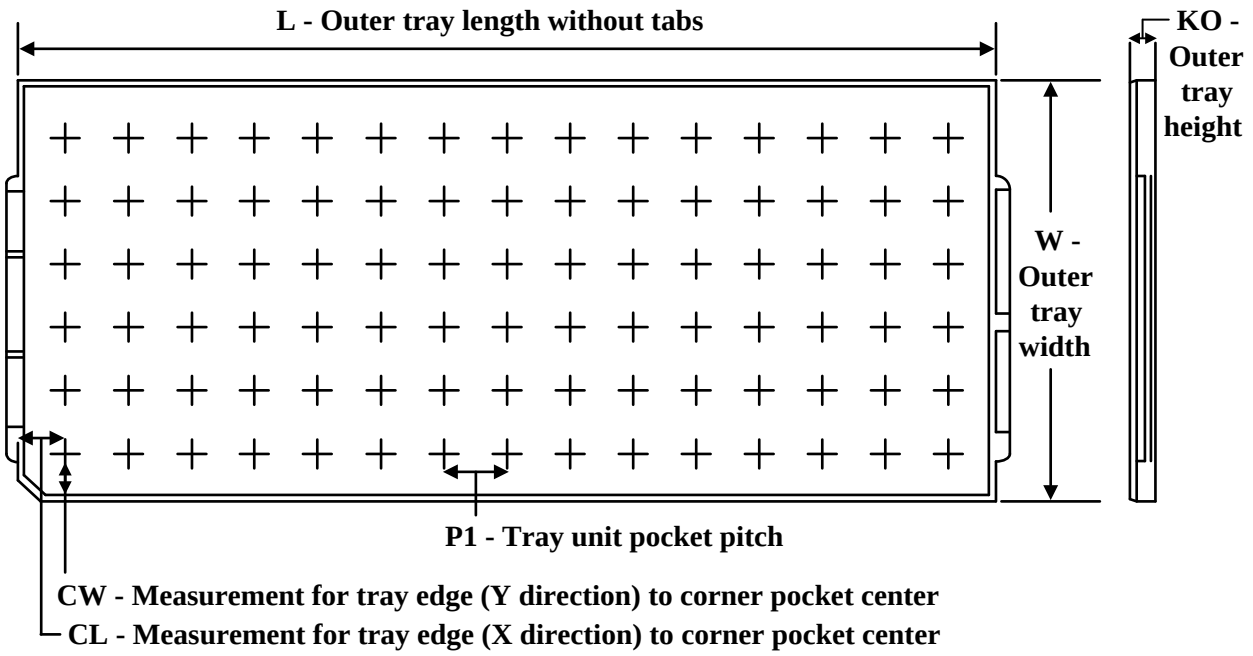

Chamfer on Tray corner indicates Pin 1 orientation of packed units.

*All dimensions are nominal

Device	Package Name	Package Type	Pins	SPQ	Unit array matrix	Max temperature (°C)	L (mm)	W (mm)	K0 (µm)	P1 (mm)	CL (mm)	CW (mm)
ADS54J64IRMP	RMP	VQFNP	72	168	8 X 21	150	315	135.9	7620	14.65	11	11.95
ADS54J64IRMP.A	RMP	VQFNP	72	168	8 X 21	150	315	135.9	7620	14.65	11	11.95
ADS54J64IRMPG4	RMP	VQFNP	72	168	8 X 21	150	315	135.9	7620	14.65	11	11.95
ADS54J64IRMPG4.A	RMP	VQFNP	72	168	8 X 21	150	315	135.9	7620	14.65	11	11.95

PACKAGE OUTLINE

RMP0072A

VQFN - 0.9 mm max height

VQFN

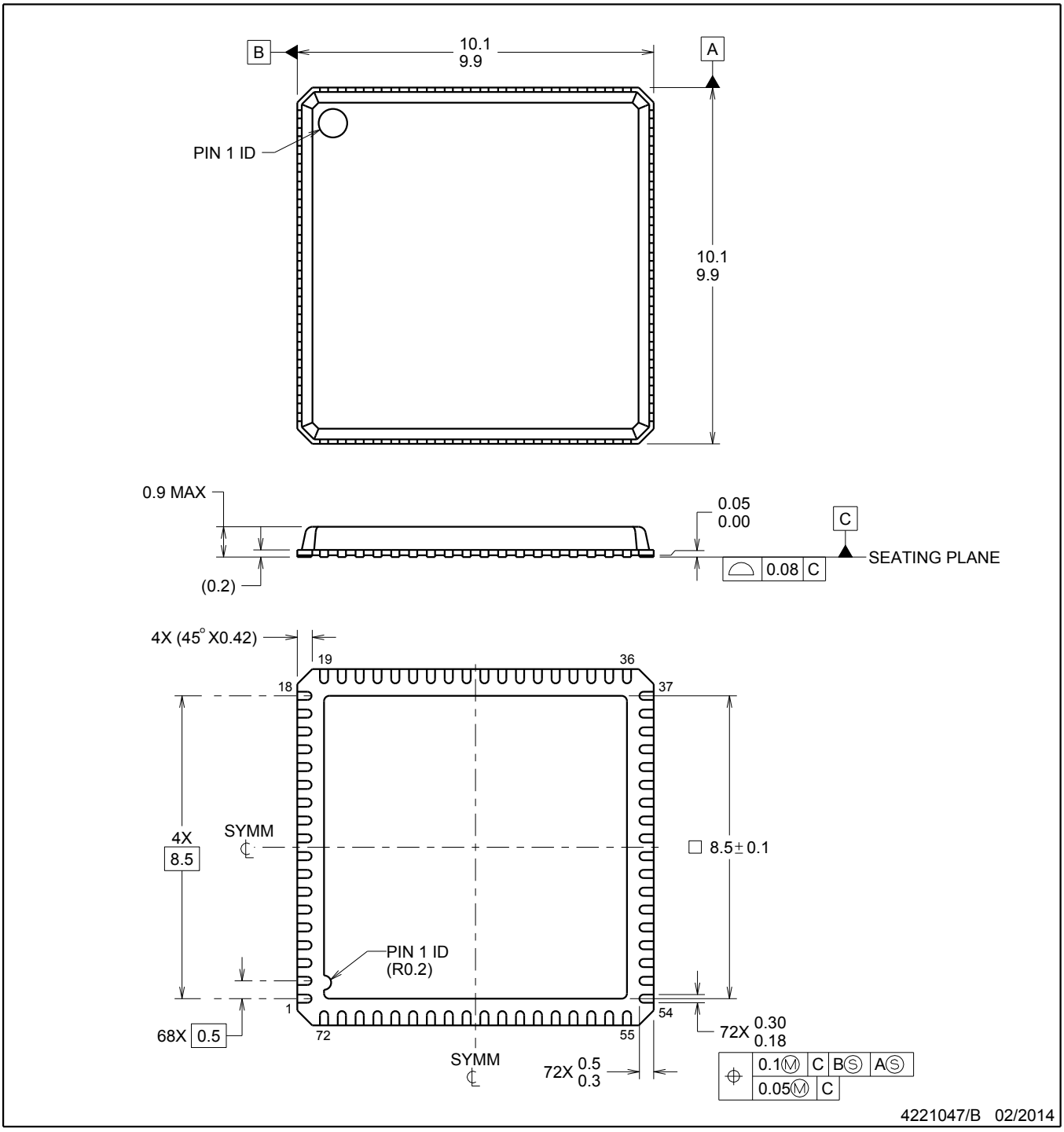

NOTES:

1. All linear dimensions are in millimeters. Any dimensions in parenthesis are for reference only. Dimensioning and tolerancing per ASME Y14.5M.
2. This drawing is subject to change without notice.
3. The package thermal pad must be soldered to the printed circuit board for thermal and mechanical performance.

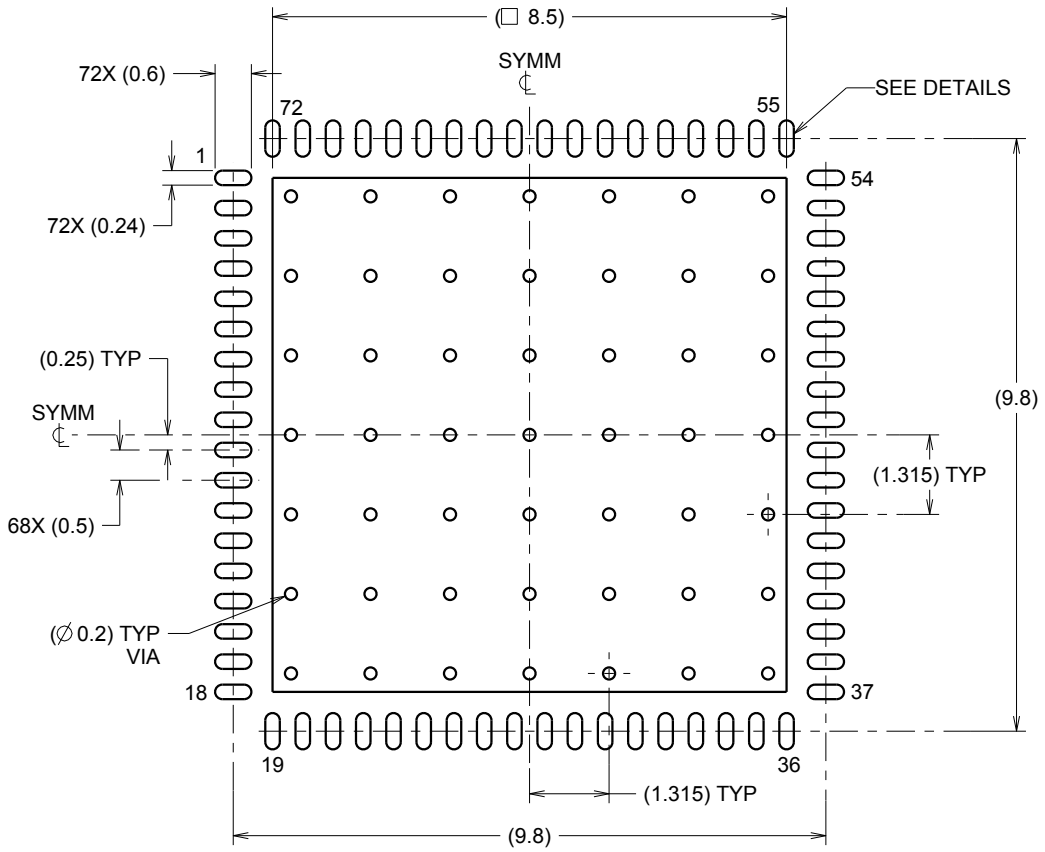

LAND PATTERN EXAMPLE
SCALE:8X

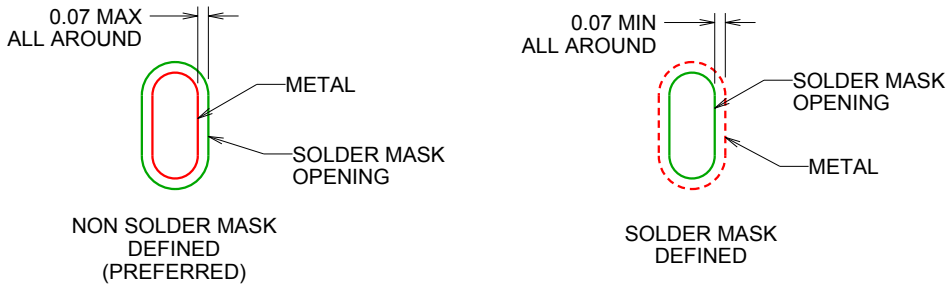

SOLDER MASK DETAILS

4221047/B 02/2014

NOTES: (continued)

4. This package is designed to be soldered to a thermal pad on the board. For more information, see QFN/SON PCB application report in literature No. SLUA271 (www.ti.com/lit/slua271).

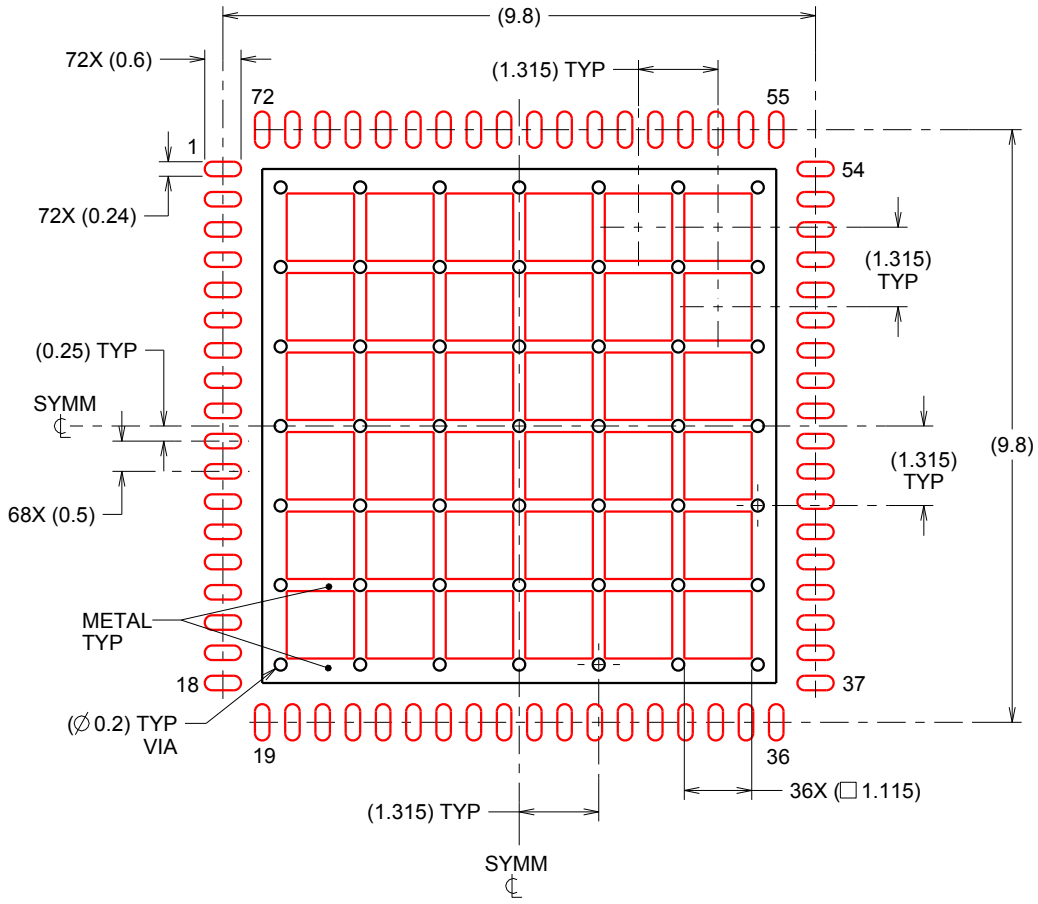

SOLDER PASTE EXAMPLE
BASED ON 0.125 mm THICK STENCIL

EXPOSED PAD
62% PRINTED SOLDER COVERAGE BY AREA
SCALE:8X

4221047/B 02/2014

NOTES: (continued)

5. Laser cutting apertures with trapezoidal walls and rounded corners may offer better paste release. IPC-7525 may have alternate design recommendations.

IMPORTANT NOTICE AND DISCLAIMER

TI PROVIDES TECHNICAL AND RELIABILITY DATA (INCLUDING DATASHEETS), DESIGN RESOURCES (INCLUDING REFERENCE DESIGNS), APPLICATION OR OTHER DESIGN ADVICE, WEB TOOLS, SAFETY INFORMATION, AND OTHER RESOURCES “AS IS” AND WITH ALL FAULTS, AND DISCLAIMS ALL WARRANTIES, EXPRESS AND IMPLIED, INCLUDING WITHOUT LIMITATION ANY IMPLIED WARRANTIES OF MERCHANTABILITY, FITNESS FOR A PARTICULAR PURPOSE OR NON-INFRINGEMENT OF THIRD PARTY INTELLECTUAL PROPERTY RIGHTS.

These resources are intended for skilled developers designing with TI products. You are solely responsible for (1) selecting the appropriate TI products for your application, (2) designing, validating and testing your application, and (3) ensuring your application meets applicable standards, and any other safety, security, regulatory or other requirements.

These resources are subject to change without notice. TI grants you permission to use these resources only for development of an application that uses the TI products described in the resource. Other reproduction and display of these resources is prohibited. No license is granted to any other TI intellectual property right or to any third party intellectual property right. TI disclaims responsibility for, and you fully indemnify TI and its representatives against any claims, damages, costs, losses, and liabilities arising out of your use of these resources.

TI’s products are provided subject to TI’s Terms of Sale, TI’s General Quality Guidelines, or other applicable terms available either on ti.com or provided in conjunction with such TI products. TI’s provision of these resources does not expand or otherwise alter TI’s applicable warranties or warranty disclaimers for TI products. Unless TI explicitly designates a product as custom or customer-specified, TI products are standard, catalog, general purpose devices.

TI objects to and rejects any additional or different terms you may propose.

Copyright © 2026, Texas Instruments Incorporated

Last updated 10/2025