14-BITS, 125/105/80/65 MSPS ADC WITH DDR LVDS/CMOS OUTPUTS

FEATURES

- **Maximum Sample Rate: 125 MSPS**
- **14-Bit Resolution with No Missing Codes**
- **3.5 dB Coarse Gain and up to 6 dB Programmable Fine Gain for SNR/SFDR Trade-Off**
- **Parallel CMOS and Double Data Rate (DDR) LVDS Output Options**
- **Supports Sine, LVCMOS, LVPECL, LVDS Clock Inputs, and Clock Amplitude Down to 400 mV_{PP}**
- **Clock Duty Cycle Stabilizer**
- **Internal Reference with Support for External Reference**
- **No External Decoupling Required for References**
- **Programmable Output Clock Position and Drive Strength to Ease Data Capture**
- **3.3-V Analog and 1.8-V to 3.3-V Digital Supply**
- **32-QFN Package (5 mm × 5 mm)**
- **Pin Compatible 12-Bit Family (ADS612X)**

APPLICATIONS

- **Wireless Communications Infrastructure**
- **Software Defined Radio**
- **Power Amplifier Linearization**
- **802.16d/e**
- **Test and Measurement Instrumentation**
- **High Definition Video**
- **Medical Imaging**
- **Radar Systems**

DESCRIPTION

ADS6145/ADS6144/ADS6143/ADS6142 (ADS614X) are a family of 14-bit A/D converters with sampling frequencies up to 125 MSPS. The high performance and low power consumption of the ADS614X are combined in a compact 32 QFN package. An internal high bandwidth sample and hold and a low jitter clock buffer help to achieve high SNR and high SFDR even at high input frequencies.

The ADS614X feature coarse and fine gain options to improve SFDR performance at lower full-scale analog input ranges.

The digital data outputs are either parallel CMOS or DDR (Double Data Rate) LVDS. Several features exist to ease data capture such as — controls for output clock position and output buffer drive strength, LVDS current, and internal termination programmability.

The output interface type, gain, and other functions are programmed using a 3-wire serial interface. Alternatively, some functions are configured using dedicated parallel pins so the device powers up to the desired state.

The ADS614X include internal references while eliminating traditional reference pins and associated external decoupling. External reference mode is also supported.

The ADS614X are specified over the industrial temperature range (–40°C to 85°C).

ADS614X Performance Summary

		ADS6145	ADS6144	ADS6143	ADS6142
SFDR, dBc	F_{in} = 10 MHz (0 dB gain)	90	91	93	95
	F_{in} = 170 MHz (3.5 dB gain)	78	82	83	84
SINAD, dBFS	F_{in} = 10 MHz (0 dB gain)	73.7	74.1	74.5	74.6
	F_{in} = 170 MHz (3.5 dB gain)	68.6	70.5	70.6	71.5
Power, mW		417	374	318	285

Please be aware that an important notice concerning availability, standard warranty, and use in critical applications of Texas Instruments semiconductor products and disclaimers thereto appears at the end of this data sheet.

PRODUCTION DATA information is current as of publication date. Products conform to specifications per the terms of the Texas Instruments standard warranty. Production processing does not necessarily include testing of all parameters.

Copyright © 2007–2008, Texas Instruments Incorporated

This integrated circuit can be damaged by ESD. Texas Instruments recommends that all integrated circuits be handled with appropriate precautions. Failure to observe proper handling and installation procedures can cause damage.

ESD damage can range from subtle performance degradation to complete device failure. Precision integrated circuits may be more susceptible to damage because very small parametric changes could cause the device not to meet its published specifications.

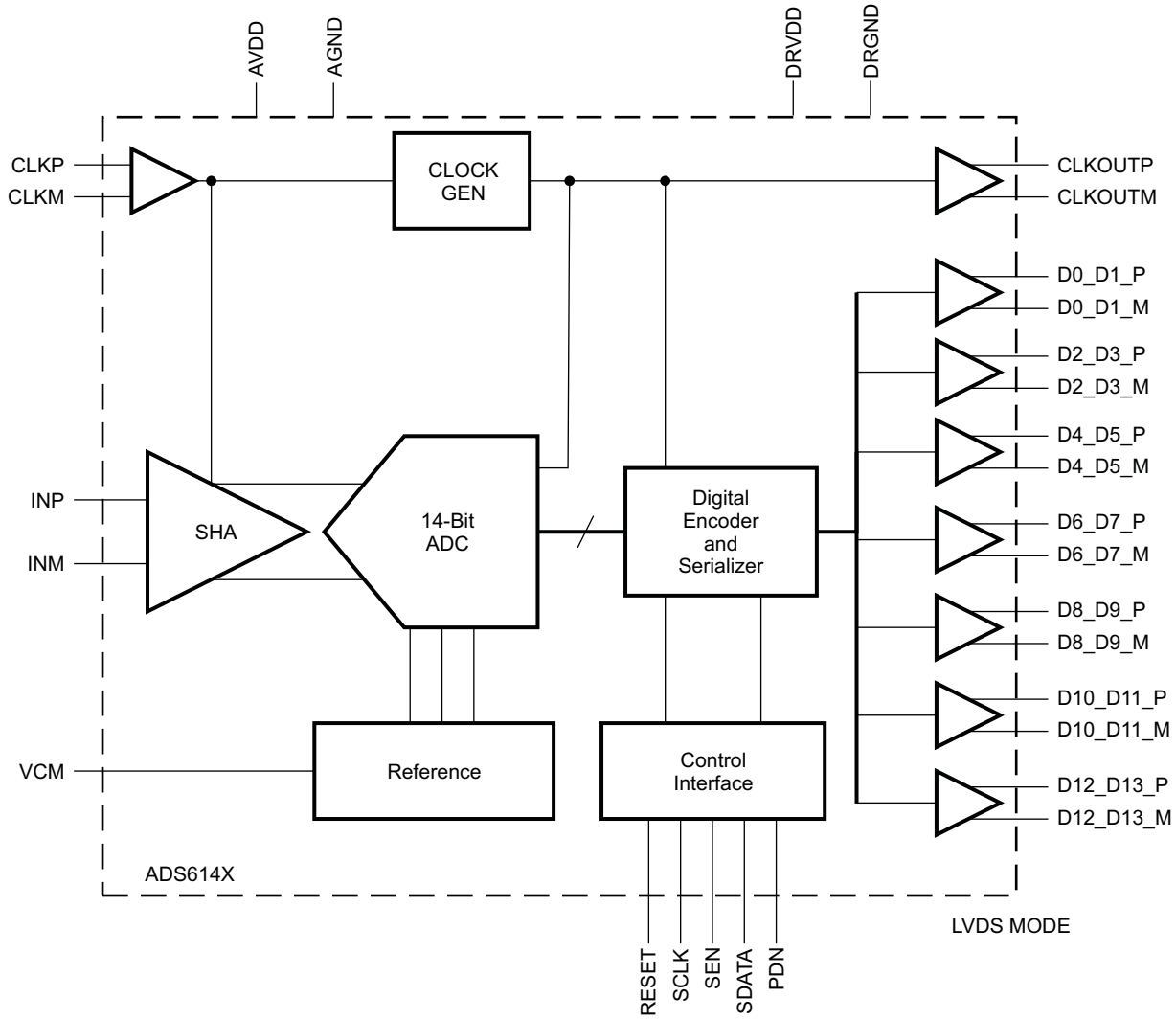

ADS61XX FAMILY

	125 MSPS	105 MSPS	80 MSPS	65 MSPS
ADS614X 14 Bits	ADS6145	ADS6144	ADS6143	ADS6142
ADS612X 12 Bits	ADS6125	ADS6124	ADS6123	ADS6122

Copyright © 2007–2008, Texas Instruments Incorporated

PACKAGE/ORDERING INFORMATION(1)

PRODUCT	PACKAGE-LEAD	PACKAGE DESIGNATOR	SPECIFIED TEMPERATURE RANGE	PACKAGE MARKING	ORDERING NUMBER	TRANSPORT MEDIA
ADS6145	QFN-32(2)	RHB	–40°C to 85°C	AZ6145	ADS6145IRHBT	Tape and Reel, small
					ADS6145IRHBR	Tape and Reel, large
ADS6144	QFN-32(2)	RHB	–40°C to 85°C	AZ6144	ADS6144IRHBT	Tape and Reel, small
					ADS6144IRHBR	Tape and Reel, large
ADS6143	QFN-32(2)	RHB	–40°C to 85°C	AZ6143	ADS6143IRHBT	Tape and Reel, small
					ADS6143IRHBR	Tape and Reel, large
ADS6142	QFN-32(2)	RHB	–40°C to 85°C	AZ6142	ADS6142IRHBT	Tape and Reel, small
					ADS6142IRHBR	Tape and Reel, large

(1) For the most current package and ordering information, see the Package Option Addendum at the end of this document, or see the TI website at www.ti.com.

(2) For thermal pad size on the package, see the mechanical drawings at the end of this data sheet. θ_{JA} = 34 °C/W (0 LFM air flow), θ_{JC} = 30 °C/W when used with 2 oz. copper trace and pad soldered directly to a JEDEC standard four layer 3 in × 3 in (7.62 cm × 7.62 cm) PCB.

ABSOLUTE MAXIMUM RATINGS(1)

		VALUE	UNIT
V_I	Supply voltage range, AVDD	–0.3 to 3.9	V
	Supply voltage range, DRVDD	–0.3 to 3.9	V
	Voltage between AGND and DRGND	–0.3 to 0.3	V
	Voltage between AVDD to DRVDD	–0.3 to 3.3	V
	Voltage applied to VCM pin (in external reference mode)	–0.3 to 2	V
	Voltage applied to analog input pins, INP and INM	–0.3 to minimum (3.6, AVDD + 0.3)	V
	Voltage applied to analog input pins, CLKP and CLKM	–0.3 to (AVDD + 0.3)	V
T_A	Operating free-air temperature range	–40 to 85	°C
T_J	Operating junction temperature range	125	°C
T_{stg}	Storage temperature range	–65 to 150	°C

(1) Stresses beyond those listed under *absolute maximum ratings* may cause permanent damage to the device. These are stress ratings only, and functional operation of the device at these or any other conditions beyond those indicated under *recommended operating conditions* is not implied. Exposure to absolute-maximum-rated conditions for extended periods may affect device reliability.

Copyright © 2007–2008, Texas Instruments Incorporated

RECOMMENDED OPERATING CONDITIONS

over operating free-air temperature range (unless otherwise noted)

			MIN	NOM	MAX	UNIT
SUPPLIES						
AVDD	Analog supply voltage		3	3.3	3.6	V
DRVDD	Output buffer supply voltage (1)	CMOS Interface	1.65	1.8 to 3.3	3.6	V
		LVDS Interface	3	3.3	3.6	V
ANALOG INPUTS						
	Differential input voltage range			2		V_{pp}
V_{IC}	Input common-mode voltage			1.5 ± 0.1		V
	Voltage applied on VCM in external reference mode		1.45	1.5	1.55	V
CLOCK INPUT						
	Input clock sample rate, F_S	ADS6145	1		125	MSPS
		ADS6144	1		105	
		ADS6143	1		80	
		ADS6142	1		65	
	Input clock amplitude differential ($V_{CLKP} - V_{CLKM}$)	Sine wave, ac-coupled	0.4	1.5		V_{pp}
		LVPECL, ac-coupled		± 0.8		
		LVDS, ac-coupled		± 0.35		
		LVCMOS, ac-coupled		3.3		
	Input Clock duty cycle		35%	50%	65%	
DIGITAL OUTPUTS						
	Output buffer drive strength (2)	For C_{LOAD} ≤ 5 pF and DRVDD ≥ 2.2 V		DEFAULT strength		
		For C_{LOAD} > 5 pF and DRVDD ≥ 2.2 V		MAXIMUM strength		
		For DRVDD < 2.2 V		MAXIMUM strength		
C_{LOAD}	Maximum external load capacitance from each output pin to DRGND	CMOS Interface, maximum buffer strength		10		pF
		LVDS Interface, without internal termination		5		
		LVDS Interface, with internal termination		10		
R_{LOAD}	Differential load resistance (external) between the LVDS output pairs			100		Ω
T_A	Operating free-air temperature		-40		85	°C

(1) For easy migration to next generation, higher sampling speed devices (> 125 MSPS), use 1.8V DRVDD supply.
(2) See *Output Buffer Strength Programmability* in the application section.

Copyright © 2007–2008, Texas Instruments Incorporated

ELECTRICAL CHARACTERISTICS

Typical values are at 25°C, min and max values are across the full temperature range T_{MIN} = –40°C to T_{MAX} = 85°C, AVDD = DRVDD = 3.3 V, maximum rated sampling frequency, 50% clock duty cycle, –1 dBFS differential analog input, internal reference mode, applies to CMOS and LVDS interfaces, unless otherwise noted.

PARAMETER		ADS6145 F_S = 125 MSPS			ADS6144 F_S = 105 MSPS			ADS6143 F_S = 80 MSPS			ADS6142 F_S = 65 MSPS			UNIT
		MIN	TYP	MAX	MIN	TYP	MAX	MIN	TYP	MAX	MIN	TYP	MAX	
RESOLUTION			14			14			14			14		Bits
ANALOG INPUT														
	Differential input voltage range		2			2			2			2		V_{PP}
	Differential input resistance (dc), see Figure 94		> 1			> 1			> 1			> 1		MΩ
	Differential input capacitance, see Figure 95		7			7			7			7		pF
	Analog input bandwidth		450			450			450			450		MHz
	Analog input common-mode current (per input pin of each ADC)		180			151			114			92		µA
REFERENCE VOLTAGES														
VREFB	Internal reference bottom voltage		1			1			1			1		V
VREFT	Internal reference top voltage		2			2			2			2		V
ΔV_{REF}	Internal reference error (VREFT–VREFB)	-20	± 5	20	-20	± 5	20	-20	± 5	20	-20	± 5	20	mV
V_{CM}	Common-mode output voltage		1.5			1.5			1.5			1.5		V
	V_{CM} Output current capability		4			4			4			4		mA
DC ACCURACY														
	No missing codes		Specified			Specified			Specified			Specified		
E_O	Offset error	-10	± 2	10	-10	± 2	10	-10	± 2	10	-10	± 2	10	mV
	Offset error temperature coefficient		0.05			0.05			0.05			0.05		mV/°C
	There are two sources of gain error – internal reference inaccuracy and channel gain error													
E_{GREF}	Gain error due to internal reference inaccuracy alone, (ΔV_{REF} /2) %	-1	0.25	1	-1	0.25	1	-1	0.25	1	-1	0.25	1	% FS
E_{GCHAN}	Gain error of channel alone(1)	-1	±0.3	1	-1	±0.3	1	-1	±0.3	1	-1	±0.3	1	% FS
	Channel gain error temperature coefficient		0.005			0.005			0.005			0.005		Δ%/°C
DNL	Differential nonlinearity	-0.95	± 0.6	2	-0.95	± 0.6	2	-0.95	± 0.5	2	-0.95	± 0.5	2	LSB
INL	Integral nonlinearity	-4.5	± 2.5	4.5	-4.5	± 2.5	4.5	-4	± 2	4	-4	± 2	4	LSB
POWER SUPPLY														
I_{AVDD}	Analog supply current		123			110			94			84		mA
I_{DRVDD}	Digital supply current, **CMOS** interface, DRVDD = 1.8 V, No load capacitance, F_{in}= 2 MHz (2)		6.1			5.4			4.5			4.0		mA
I_{DRVDD}	Digital supply current, **LVDS** interface, DRVDD = 3.3 V, with 100-Ω external termination		42			42			42			42		mA
	Total power, **CMOS**, DRVDD = 3.3 V (3)		417	625		374	525		318	440		285	400	mW
	Global power down		30	60		30	60		30	60		30	60	mW

(1) Specified by design and characterization; not tested in production.
(2) In CMOS mode, the DRVDD current scales with the sampling frequency and the load capacitance on the output pins (see **Figure 87**).
(3) The maximum DRVDD current depends on the actual load capacitance on the digital output lines. Note that the maximum recommended load capacitance is 10 pF.

Copyright © 2007–2008, Texas Instruments Incorporated

ELECTRICAL CHARACTERISTICS

Typical values are at 25°C, min and max values are across the full temperature range T_{MIN} = –40°C to T_{MAX} = 85°C, AVDD = DRVDD = 3.3 V, maximum rated sampling frequency, 50% clock duty cycle, –1 dBFS differential analog input, internal reference mode, applies to CMOS and LVDS interfaces, unless otherwise noted.

PARAMETER	TEST CONDITIONS		ADS6145 F_S = 125 MSPS			ADS6144 F_S = 105 MSPS			ADS6143 F_S = 80 MSPS			ADS6142 F_S = 65 MSPS			UNIT
			MIN	TYP	MAX	MIN	TYP	MAX	MIN	TYP	MAX	MIN	TYP	MAX	
DYNAMIC AC CHARACTERISTICS															
SNR Signal-to-noise ratio, **CMOS**	F_{in} = 10 MHz			73.9			74.3			74.6			74.7		dBFS
	F_{in} = 50 MHz		70	73.7			73.7		71	74.2			74.4		
	F_{in} = 70 MHz			73.3		70	73.9			74.1		71	74.4		
	F_{in} = 170 MHz	0 dB Gain		71.1			71.8			72.3			72.7		
		3.5 dB Coarse gain		70.1			70.9			71.4			71.8		
	F_{in} = 230 MHz	0 dB Gain		69.8			70.7			71.3			71.7		
		3.5 dB Coarse gain		69			69.9			70.4			70.9		
SNR Signal-to-noise ratio, **LVDS**	F_{in} = 10 MHz			74.5			74.4			74.9			75		dBFS
	F_{in} = 50 MHz		70.5	74.4			73.9		71.5	74.4			74.6		
	F_{in} = 70 MHz			74.1		70.5	74.1			74.3		71.5	74.6		
	F_{in} = 170 MHz	0 dB Gain		72.3			72.3			72.8			72.9		
		3.5 dB Coarse gain		71.5			71.5			71.9			72.1		
	F_{in} = 230 MHz	0 dB Gain		71.2			71.2			71.8			72		
		3.5 dB Coarse gain		70.5			70.5			71.1			71.2		
RMS output noise	Inputs tied to common-mode			1.05			1.05			1.05			1.05		LSB
SINAD Signal-to-noise and distortion ratio **CMOS**	F_{in} = 10 MHz			73.7			74.1			74.5			74.6		dBFS
	F_{in} = 50 MHz		69	72.3			73		70	74.1			74.1		
	F_{in} = 70 MHz			72.6		69	73.2			73.3		70	74.0		
	F_{in} = 170 MHz	0 dB Gain		68.7			71			71.1			72.2		
		3.5 dB Coarse gain		68.6			70.5			70.6			71.5		
	F_{in} = 230 MHz	0 dB Gain		67.3			69			70.2			70.6		
		3.5 dB Coarse gain		67			69			69.9			70.4		
SINAD Signal-to-noise and distortion ratio **LVDS**	F_{in} = 10 MHz			74.3			74.3			74.8			74.9		dBFS
	F_{in} = 50 MHz		69.5	72.7			72.9		70.5	74.3			74.4		
	F_{in} = 70 MHz			73.4		69.5	73.5			73.6		70.5	74.4		
	F_{in} = 170 MHz	0 dB Gain		70.6			71.4			72			72.4		
		3.5 dB Coarse gain		70.8			71.1			71.6			71.9		
	F_{in} = 230 MHz	0 dB Gain		69.4			69.2			71			70.5		
		3.5 dB Coarse gain		69.4			69.4			70.7			70.5		
ENOB Effective number of bits	F_{in} = 50 MHz		11.1	11.7					11.3	12					Bits
	F_{in} = 70 MHz					11.1	11.8					11.3	12		
SFDR Spurious free dynamic range	F_{in} = 10 MHz			90			91			93			95		dBc
	F_{in} = 50 MHz		76	80			83		79	89			89		
	F_{in} = 70 MHz			84		78	84			84		79	86		
	F_{in} = 170 MHz	0 dB Gain		76			80			81			82		
		3.5 dB Coarse gain		78			82			83			84		
	F_{in} = 230 MHz	0 dB Gain		75			77			79			79		
		3.5 dB Coarse gain		76			79			81			82		

Copyright © 2007–2008, Texas Instruments Incorporated

ELECTRICAL CHARACTERISTICS (continued)

Typical values are at 25°C, min and max values are across the full temperature range T_{MIN} = –40°C to T_{MAX} = 85°C, AVDD = DRVDD = 3.3 V, maximum rated sampling frequency, 50% clock duty cycle, –1 dBFS differential analog input, internal reference mode, applies to CMOS and LVDS interfaces, unless otherwise noted.

PARAMETER	TEST CONDITIONS		ADS6145 F_S = 125 MSPS			ADS6144 F_S = 105 MSPS			ADS6143 F_S = 80 MSPS			ADS6142 F_S = 65 MSPS			UNIT
			MIN	TYP	MAX	MIN	TYP	MAX	MIN	TYP	MAX	MIN	TYP	MAX	
THD Total harmonic distortion	F_{in} = 10 MHz			88.5			90			91.5			93		dBc
	F_{in} = 50 MHz		73	79.5			82.5		76	88			88		
	F_{in} = 70 MHz			82		75	83			83		76	85		
	F_{in} = 170 MHz	0 dB Gain		73.5			79			78			80		
		3.5 dB Coarse gain		75			81			79			82		
	F_{in} = 230 MHz	0 dB Gain		71.5			75.5			76			76		
		3.5 dB Coarse gain		72.5			77.5			78			78.5		
HD2 Second harmonic distortion	F_{in} = 10 MHz			96			96			97			98		dBc
	F_{in} = 50 MHz		76	95			96		79	96			96		
	F_{in} = 70 MHz			91		78	92			93		79	93		
	F_{in} = 170 MHz	0 dB Gain		81			83			83			86		
		3.5 dB Coarse gain		82			84			84			87		
	F_{in} = 230 MHz	0 dB Gain		75			79			80			79		
		3.5 dB Coarse gain		76			81			81			81		
HD3 Third harmonic distortion	F_{in} = 10 MHz			90			91			93			95		dBc
	F_{in} = 50 MHz		76	80			83		79	89			89		
	F_{in} = 70 MHz			84		78	84			84		79	86		
	F_{in} = 170 MHz	0 dB Gain		76			80			81			82		
		3.5 dB Coarse gain		78			82			83			84		
	F_{in} = 230 MHz	0 dB Gain		75			77			79			79		
		3.5 dB Coarse gain		76			79			81			82		
Worst spur (other than HD2, HD3)	F_{in} = 10 MHz			93			94			96			97		dBc
	F_{in} = 50 MHz			92			90			93			96		
	F_{in} = 70 MHz			91			90			92			95		
	F_{in} = 170 MHz			90			89			89			91		
	F_{in} = 230 MHz			90			88			89			90		
IMD 2-Tone intermodulation distortion	F1 = 185 MHz, F2 = 190 MHz, Each tone at -7 dBFS			83			82			84			88		dBFS
Input overload recovery	Recovery to within 1% (of final value) for 6-dB overload with sine wave input			1			1			1			1		clock cycles
PSRR AC Power supply rejection ratio	For 100 mVpp signal on AVDD supply			35			35			35			35		dBc

Copyright © 2007–2008, Texas Instruments Incorporated

DIGITAL CHARACTERISTICS(1)

The dc specifications refer to the condition where the digital outputs are not switching, but are permanently at a valid logic level 0 or 1, AVDD = 3.3 V

PARAMETER		TEST CONDITIONS	ADS6145/ADS6144 ADS6143/ADS6142			
			MIN	TYP	MAX	UNIT
DIGITAL INPUTS PDN, SCLK, SDATA, and SEN (2)						
	High-level input voltage		2.4			V
	Low-level input voltage				0.8	V
	High-level input current			33		µA
	Low-level input current			–33		µA
	Input capacitance			4		pF
DIGITAL OUTPUTS CMOS INTERFACE, DRVDD = 1.8 to 3.3 V						
	High-level output voltage			DRVDD		V
	Low-level output voltage			0		V
	Output capacitance	Output capacitance inside the device, from each output to ground		2		pF
DIGITAL OUTPUTS LVDS INTERFACE, DRVDD = 3.3 V, I_O = 3.5 mA, R_L = 100 Ω (3)						
	High-level output voltage			1375		mV
	Low-level output voltage			1025		mV
$\lvert V_{OD} \rvert$	Output differential voltage		225	350		mV
V_{OS}	Output offset voltage, single-ended	Common-mode voltage of OUTP, OUTM		1200		mV
	Output capacitance	Output capacitance inside the device, from either output to ground		2		pF

(1) All LVDS and CMOS specifications are characterized, but not tested at production.
(2) SCLK and SEN function as digital input pins when they are used for serial interface programming. When used as parallel control pins, analog voltage needs to be applied as per Table 1 & Table 2
(3) I_O Refers to the LVDS buffer current setting, R_L is the differential load resistance between the LVDS output pair.

Copyright © 2007–2008, Texas Instruments Incorporated

TIMING CHARACTERISTICS – LVDS AND CMOS MODES(1)

Typical values are at 25°C, min and max values are across the full temperature range T_{MIN} = –40°C to T_{MAX} = 85°C, AVDD = DRVDD = 3.3 V, maximum rated sampling frequency, sine wave input clock, 1.5 V_{PP} clock amplitude, C_L = 5 pF(2), I_O = 3.5 mA, R_L = 100 Ω (3), no internal termination, unless otherwise noted.

For timings at lower sampling frequencies, see section Output Timings in the APPLICATION INFORMATION of this data sheet.

PARAMETER		TEST CONDITIONS		ADS6145 F_S = 125 MSPS			ADS6144 F_S = 105 MSPS			ADS6143 F_S = 80 MSPS			ADS6142 F_S = 65 MSPS			UNIT
				MIN	TYP	MAX	MIN	TYP	MAX	MIN	TYP	MAX	MIN	TYP	MAX	
t_a	Aperture delay			0.7	1.5	2.5	0.7	1.5	2.5	0.7	1.5	2.5	0.7	1.5	2.5	ns
t_j	Aperture jitter				150			150			150			150		fs rms
	Wake-up time (to valid data)	From global power down			15	50		15	50		15	50		15	50	µs
		From standby			15	50		15	50		15	50		15	50	µs
		From output buffer disable	CMOS		100	200		100	200		100	200		100	200	ns
			LVDS		200	500		200	500		200	500		200	500	ns
	Latency				9			9			9			9		clock cycles
DDR LVDS MODE(4), DRVDD = 3.3 V																
t_{su}	Data setup time(5)	Data valid (6) to zero-cross of CLKOUTP		1.7	2.3		2.5	3.1		3.9	4.5		5.4	6.0		ns
t_h	Data hold time(5)	Zero-cross of CLKOUTP to data becoming invalid(6)		0.7	1.7		0.7	1.7		0.7	1.7		0.7	1.7		ns
t_{PDI}	Clock propagation delay	Input clock rising edge zero-cross to output clock rising edge zero-cross		4.3	5.8	7.3	4.3	5.8	7.3	4.3	5.8	7.3	4.3	5.8	7.3	ns
	LVDS bit clock duty cycle	Duty cycle of differential clock, (CLKOUTP-CLKOUTM), 10 ≤ F_s ≤ 125 MSPS		40%	47%	55%	40%	47%	55%	40%	47%	55%	40%	47%	55%	
t_r t_f	Data rise time, Data fall time	Rise time measured from –50 mV to 50 mV, Fall time measured from 50 mV to –50 mV, 1 ≤ F_s ≤ 125 MSPS		70	100	170	70	100	170	70	100	170	70	100	170	ps
$t_{CLKRISE}$ $t_{CLKFALL}$	Output clock rise time, Output clock fall time	Rise time measured from –50 mV to 50 mV, Fall time measured from 50 mV to –50 mV, 1 ≤ F_s ≤ 125 MSPS		70	100	170	70	100	170	70	100	170	70	100	170	ps
PARALLEL CMOS MODE, DRVDD = 2.5 V to 3.3 V, default output buffer drive strength (7)																
t_{su}	Data setup time(5)	Data valid(8) to 50% of CLKOUT rising edge		2.9	4.4		3.6	5.1		5.1	6.6		6.5	8.0		ns
t_h	Data hold time(5)	50% of CLKOUT rising edge to data becoming invalid(8)		1.3	2.7		2.1	3.5		3.6	5.0		5.1	6.5		ns

(1) Timing parameters are specified by design and characterization and not tested in production.
(2) C_L is the Effective external single-ended load capacitance between each output pin and ground.
(3) I_O Refers to the LVDS buffer current setting; R_L is the differential load resistance between the LVDS output pair.
(4) Measurements are done with a transmission line of 100 Ω characteristic impedance between the device and the load.
(5) Setup and hold time specifications take into account the effect of jitter on the output data and clock.
(6) Data valid refers to a logic high of +100 mV and logic low of –100 mV.
(7) For DRVDD < 2.2 V, it is recommended to use an external clock for data capture and NOT the device output clock signal (CLKOUT). See *Parallel CMOS interface* in the application section.
(8) Data valid refers to a logic high of 2 V (1.7 V) and logic low of 0.8 V (0.7 V) for DRVDD = 3.3 V (2.5 V).

Copyright © 2007–2008, Texas Instruments Incorporated

TIMING CHARACTERISTICS – LVDS AND CMOS MODES (continued)

For timings at lower sampling frequencies, see section Output Timings in the APPLICATION INFORMATION of this data sheet.

PARAMETER		TEST CONDITIONS	ADS6145 F_S = 125 MSPS			ADS6144 F_S = 105 MSPS			ADS6143 F_S = 80 MSPS			ADS6142 F_S = 65 MSPS			UNIT
			MIN	TYP	MAX	MIN	TYP	MAX	MIN	TYP	MAX	MIN	TYP	MAX	
t_{PDI}	Clock propagation delay	Input clock rising edge zero-cross to 50% of CLKOUT rising edge	5	6.5	7.9	5	6.5	7.9	5	6.5	7.9	5	6.5	7.9	ns
	Output clock duty cycle	Duty cycle of output clock (CLKOUT), 10 ≤ F_s ≤ 125 MSPS	45%	50%	55%	45%	50%	55%	45%	50%	55%	45%	50%	55%	
t_r t_f	Data rise time, Data fall time	Rise time measured from 20% to 80% of DRVDD, Fall time measured from 80% to 20% of DRVDD, 1 ≤ F_s ≤ 125 MSPS	0.8	1.5	2.4	0.8	1.5	2.4	0.8	1.5	2.4	0.8	1.5	2.4	ns
$t_{CLKRISE}$ $t_{CLKFALL}$	Output clock rise time, Output clock fall time	Rise time measured from 20% to 80% of DRVDD, Fall time measured from 80% to 20% of DRVDD, 1 ≤ F_s ≤ 125 MSPS	0.8	1.5	2.4	0.8	1.5	2.4	0.8	1.5	2.4	0.8	1.5	2.4	ns

Copyright © 2007–2008, Texas Instruments Incorporated

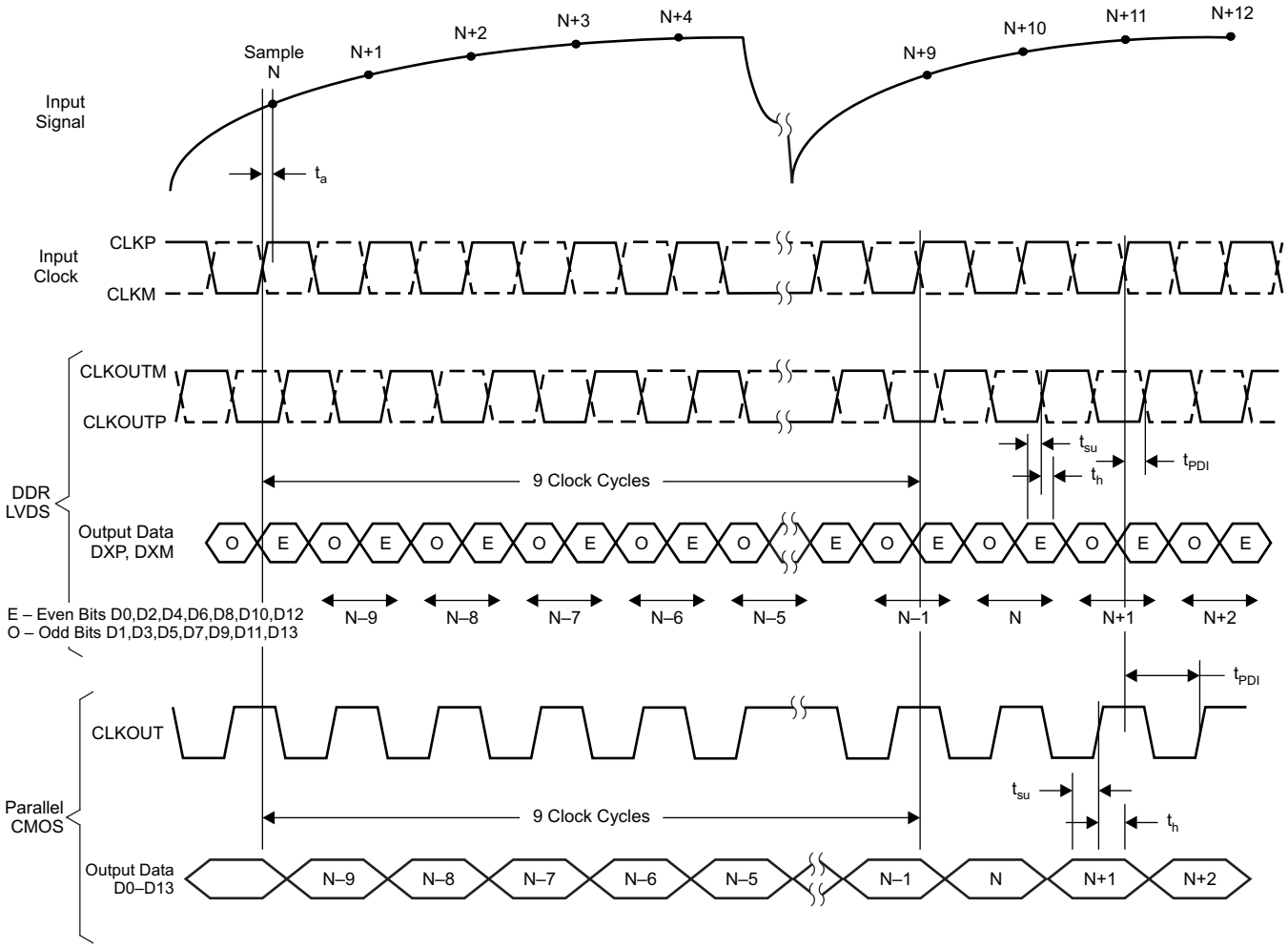

Figure 1. Latency

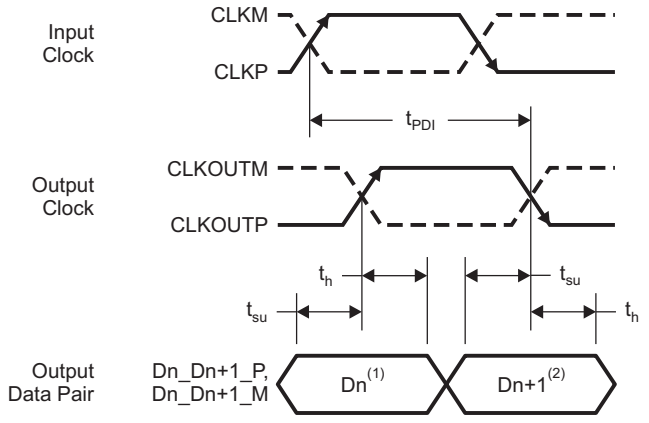

(1)Dn – Bits D0, D2, D4, D6, D8, D10, D12
(2)Dn+1 – Bits D1, D3, D5, D7, D9, D11, D13

Figure 2. LVDS Mode Timing

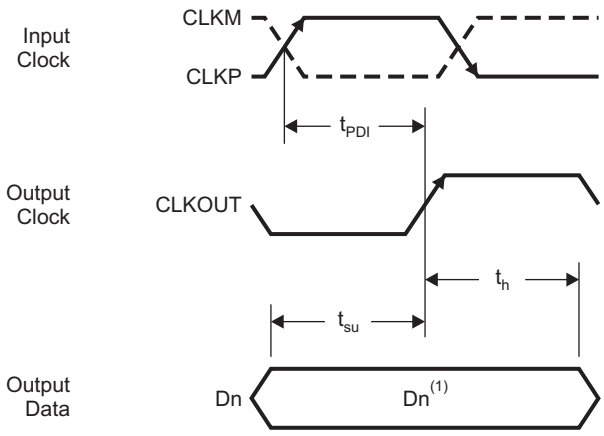

(1)Dn – Bits D0–D13

Figure 3. CMOS Mode Timing

DEVICE PROGRAMMING MODES

The ADS614X have several features that can be easily configured using either parallel interface control or serial interface programming.

USING SERIAL INTERFACE PROGRAMMING ONLY

To program using the serial interface, the internal registers must first be reset to their default values, and the RESET pin must be kept ***low***. In this mode, SEN, SDATA, and SCLK function as serial interface pins and are used to access the internal registers of the ADC. The registers are reset either by applying a pulse on the RESET pin or by a ***high*** setting on the <RST> bit (D4 in register 0x00). The Serial Interface section describes register programming and register reset in more detail.

USING PARALLEL INTERFACE CONTROL ONLY

To control the device using the parallel interface, keep RESET tied ***high*** (AVDD). Now SEN, SCLK, SDATA, and PDN function as parallel interface control pins. These pins can be used to directly control certain modes of the ADC by connecting them to the correct voltage levels (as described in Table 1 to Table 3). There is no need to apply a reset pulse.

Frequently used functions are controlled in this mode — standby, selection between LVDS/CMOS output format, internal/external reference, and 2s complement/straight binary output format.

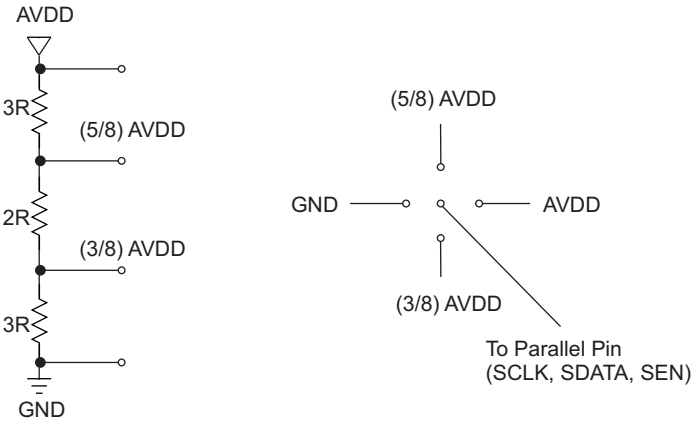

Figure 4. Simple Scheme to Configure Parallel Pins

DESCRIPTION OF PARALLEL PINS

Table 1. SCLK (Analog Control Pin)

SCLK	DESCRIPTION
0	Internal reference and 0 dB gain (full-scale = 2 V_{PP})
(3/8) AVDD	External reference and 0 dB gain (full-scale = 2 V_{PP})
(5/8) AVDD	External reference and 3.5 dB coarse gain (full-scale = 1.34 V_{PP})
AVDD	Internal reference and 3.5 dB coarse gain (full-scale = 1.34 V_{PP})

Table 2. SEN (Analog Control Pin)

SEN	DESCRIPTION
0	2s Complement format and DDR LVDS interface
(3/8) AVDD	Straight binary format and DDR LVDS interface
(5/8) AVDD	Straight binary and parallel CMOS interface
AVDD	2s Complement format and parallel CMOS interface

Copyright © 2007–2008, Texas Instruments Incorporated

Table 3. SDATA, PDN (Digital Control Pins)

SDATA	PDN	DESCRIPTION
Low	Low	Normal operation
Low	High (AVDD)	Standby - only the ADC is powered down
High (AVDD)	Low	Output buffers are powered down, fast wake-up time
High (AVDD)	High (AVDD)	Global power down. ADC, internal reference, and output buffers are powered down, slow wake-up time

SERIAL INTERFACE

The ADC has a set of internal registers, which can be accessed through the serial interface formed by pins SEN (Serial interface Enable), SCLK (Serial Interface Clock), SDATA (Serial Interface Data) and RESET. After device power-up, the internal registers must be reset to their default values by applying a high-going pulse on RESET (of width greater than 10 ns).

Serial shift of bits into the device is enabled when SEN is low. Serial data SDATA is latched at every falling edge of SCLK when SEN is active (low). The serial data is loaded into the register at every 16th SCLK falling edge when SEN is low. If the word length exceeds a multiple of 16 bits, the excess bits are ignored. Data is loaded in multiples of 16-bit words within a single active SEN pulse.

The first 5 bits form the register address and the remaining 11 bits form the register data.

The interface can work with a SCLK frequency from 20 MHz down to very low speeds (a few hertz) and also with a non-50% SCLK duty cycle.

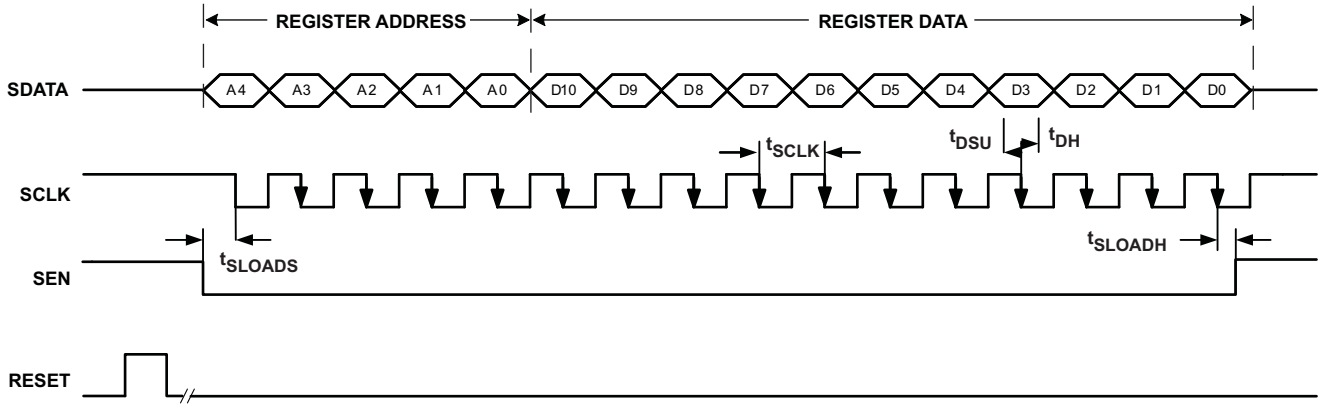

Figure 5. Serial Interface Timing Diagram

REGISTER INITIALIZATION

After power-up, the internal registers *must* be reset to their default values. This is done in one of two ways:

1. Either through a hardware reset by applying a high-going pulse on the RESET pin (width greater than 10 ns) as shown in Figure 5.

   OR

2. By applying a software reset. Using the serial interface, set the <RST> bit (D4 in register 0x00) to ***high***. This initializes the internal registers to their default values and then self-resets the <RST> bit to ***low***. In this case the RESET pin is kept ***low***.

Copyright © 2007–2008, Texas Instruments Incorporated

SERIAL INTERFACE TIMING

Typical values at 25°C, min and max values across the full temperature range T_{MIN} = –40°C to T_{MAX} = 85°C, AVDD = DRVDD = 3.3 V (unless otherwise noted)

		MIN	TYP	MAX	UNIT
f_{SCLK}	SCLK Frequency = $1/t_{SCLK}$	> DC		20	MHz
t_{SLOADS}	SEN to SCLK Setup time	25			ns
t_{SLOADH}	SCLK to SEN Hold time	25			ns
t_{DSU}	SDATA Setup time	25			ns
t_{DH}	SDATA Hold time	25			ns

RESET TIMING

Typical values at 25°C, min and max values across the full temperature range T_{MIN} = –40°C to T_{MAX} = 85°C, AVDD = DRVDD = 3.3 V (unless otherwise noted)

PARAMETER		TEST CONDITIONS	MIN	TYP	MAX	UNIT
t_1	Power-on delay	Delay from power-up of AVDD and DRVDD to RESET pulse active	5			ms
t_2	Reset pulse width	Pulse width of active RESET signal	10			ns
t_3	Register write delay	Delay from RESET disable to SEN active	25			ns
t_{PO}	Power-up time	Delay from power-up of AVDD and DRVDD to output stable		6.5		ms

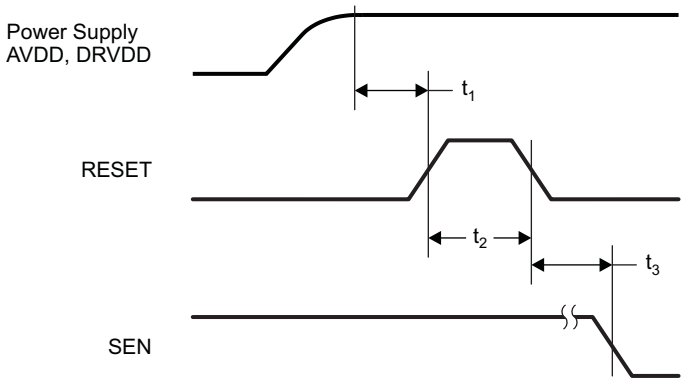

NOTE: A high-going pulse on the RESET pin is required in serial interface mode in the case of initialization through a hardware reset. For parallel interface operation, RESET has to be tied permanently HIGH.

Figure 6. Reset Timing Diagram

Copyright © 2007–2008, Texas Instruments Incorporated

SERIAL REGISTER MAP

Table 4 gives a summary of all the modes that can be programmed through the serial interface.

Table 4. Summary of Functions Supported by Serial Interface(1)(2)

REGISTER ADDRESS IN HEX	REGISTER FUNCTIONS										
A4 - A0	**D10**	**D9**	**D8**	**D7**	**D6**	**D5**	**D4**	**D3**	**D2**	**D1**	**D0**
00	**<PDN OBUF>** Output buffers powered down	**<COARSE GAIN>** Coarse gain	**<LVDS CMOS>** LVDS or CMOS Output interface	0	0	**<REF>** Internal or external Reference	**<RST>** Software reset	0	**<PDN CLKOUT>** Output clock buffer powered down	0	**<STBY>** ADC Power down
04	**<DATAOUT POSN>** Output data position control	**<CLKOUT EDGE>** Output clock edge control	**<CLKOUT POSN>** Output clock position control	0	0	0	0	0	0	0	0
09	Bit-wise or Byte-wise control	0	0	0	0	0	0	0	0	0	0
0A	**<DATA FORMAT>** 2s Complement or straight binary	0	0	**<TEST PATTERNS>**			0	0	0	0	0
0B	**<CUSTOM LOW>** Custom pattern lower 9 bits									0	0
0C	**<FINE GAIN>** Fine gain 0 to 6dB			0	0	0	**<CUSTOM HIGH>** Custom pattern upper 5 bits				
0E	0	LVDS Termination LVDS Internal termination control for output data and clock						**<LVDS CURRENT>** LVDS Current control		**<CURRENT DOUBLE>** LVDS current double	
0F	0	0	0	**<DRIVE STRENGTH>** CMOS output buffer drive strength control				0	0	0	0

(1) The unused bits in each register (shown by blank cells in above table) must be programmed as '0'.
(2) Multiple functions in a register can be programmed in a single write operation.

Copyright © 2007–2008, Texas Instruments Incorporated

DESCRIPTION OF SERIAL REGISTERS

Each register function is explained in detail.

Table 5.

A4–A0 (hex)	D10	D9	D8	D7	D6	D5	D4	D3	D2	D1	D0
00	<PDN OBUF> Output buffers powered down	<COARSE GAIN> Coarse gain	<LVDS CMOS> LVDS or CMOS Output interface	0	0	<REF> Internal or external reference	<RST> Software reset	0	<PDN CLKOUT> Output clock buffer powered down	0	<STBY> ADC Power down

D0	<STBY> Power down modes
0	Normal operation
1	Device enters standby mode where only ADC is powered down.

D2	<PDN CLKOUT> Power down modes
0	Output clock is active (on CLKOUT pin)
1	Output clock buffer is powered down and becomes three-stated. Data outputs are unaffected.

D4	<RST>
1	Software reset applied - resets all internal registers and the bit self-clears to 0.

D5	<REF> Reference selection
0	Internal reference enabled
1	External reference enabled

D8	<LVDS CMOS> Output Interface selection
0	Parallel CMOS interface
1	DDR LVDS Interface

D9	<COARSE GAIN> Gain programming
0	0 dB Coarse gain
1	3.5 dB Coarse gain

D10	<PDN OBUF> Power down modes
0	Output data and clock buffers enabled
1	Output data and clock buffers disabled

Copyright © 2007–2008, Texas Instruments Incorporated

Table 6.

A4–A0 (hex)	D10	D9	D8	D7	D6	D5	D4	D3	D2	D1	D0
04	<DATAOUT POSN> Output data position control	<CLKOUT EDGE> Output Clock edge control	<CLKOUT POSN> Output clock position control	0	0	0	0	0	0	0	0

D8	<CLKOUT POSN> Output clock position control
0	Default output clock position after reset. The setup/hold timings for this clock position are specified in the timing specifications table.
1	Output clock shifted (delayed) by 400 ps

D9	<CLKOUT EDGE>
0	Use rising edge to capture data
1	Use falling edge to capture data

D10	<DATAOUT_POSN>
0	Default position (after reset)
1	Data transition delayed by half clock cycle with respect to default position

Table 7.

A4–A0 (hex)	D10	D9	D8	D7	D6	D5	D4	D3	D2	D1	D0
09	Bit-wise or Byte-wise control	0	0	0	0	0	0	0	0	0	0

D10	Bit-wise or byte-wise selection (DDR LVDS mode only)
0	Bit-wise sequence - Even data bits (D0, D2, D4,..D12) are output at the rising edge of CLKOUTP and odd data bits (D1, D3, D5,..D13) at the falling edge of CLKOUTP
1	Byte-wise sequence - Lower 7 data bits (D0-D7) are output at the rising edge of CLKOUTP and upper 7 data bits (D8-D13) at the falling edge of CLKOUTP

Copyright © 2007–2008, Texas Instruments Incorporated

Table 8.

A4–A0 (hex)	D10	D9	D8	D7	D6	D5	D4	D3	D2	D1	D0
0A	<DF> 2s Complement or straight binary	0	0	<TEST PATTERNS>			0	0	0	0	0

D7-D5	Test patterns
000	Normal operation - <D13:D0> = ADC output
001	All zeros - <D13:D0> = 0x0000
010	All ones - <D13:D0> = 0x3FFF
011	Toggle pattern - <D13:D0> toggles between 0x2AAA and 0x1555
100	Digital ramp - <D13:D0> increments from 0x0000 to 0x3FFF by one code every cycle
101	Custom pattern - <D13:D0> = contents of CUSTOM PATTERN registers
110	Unused
111	Unused

D10	<DATA FORMAT>
0	2s Complement
1	Straight binary

Table 9.

A4–A0 (hex)	D10	D9	D8	D7	D6	D5	D4	D3	D2	D1	D0
0B	<CUSTOM LOW> Lower 9 bits of custom pattern									0	0

Table 10.

A4–A0 (hex)	D10	D9	D8	D7	D6	D5	D4	D3	D2	D1	D0
0C	<FINE GAIN> Fine gain 0 to 6dB			0	0	0	<CUSTOM HIGH> Upper 5 bits of custom pattern				

Reg 0B D10-D2 **<CUSTOM LOW>** - Specifies lower 9 bits of custom pattern

Reg 0C D4-D0 **<CUSTOM HIGH>** - Specifies upper 5 bits of custom pattern

D10-D8	<FINE GAIN> Gain programming
000	0 dB Gain
001	1 dB Gain
010	2 dB Gain
011	3 dB Gain
100	4 dB Gain
101	5 dB Gain
110	6 dB Gain
111	Unused

Copyright © 2007–2008, Texas Instruments Incorporated

Table 11.

A4–A0 (hex)	D10	D9	D8	D7	D6	D5	D4	D3	D2	D1	D0
0E	0	<LVDS TERMINATION> LVDS Internal termination control for output data and clock						<LVDS CURRENT> LVDS Current control		<CURRENT DOUBLE> LVDS Current double	

D1-D0	**<CURRENT DOUBLE>** LVDS current programming
D0	**LVDS Data buffer current control**
0	Default current, set by <LVDS_CURR>
1	2x LVDS Current set by <LVDS_CURR>
D1	**LVDS Clock buffer current control**
0	Default current, set by <LVDS_CURR>
1	2x LVDS Current set by <LVDS_CURR>
D3-D2	**<LVDS CURRENT>** LVDS current programming
00	3.5 mA
01	2.5 mA
10	4.5 mA
11	1.75 mA
D9-D4	LVDS internal termination
D9-D7	**<DATA TERM>** Internal termination for LVDS output data bits
000	No internal termination
001	300 Ω
010	185 Ω
011	115 Ω
100	150 Ω
101	100 Ω
110	80 Ω
111	65 Ω
D6-D4	**<CLKOUT TERM>** Internal termination for LVDS output clock
000	No internal termination
001	300 Ω
010	185 Ω
011	115 Ω
100	150 Ω
101	100 Ω
110	80 Ω
111	65 Ω

Copyright © 2007–2008, Texas Instruments Incorporated

Table 12.

A4–A0 (hex)	D10	D9	D8	D7	D6	D5	D4	D3	D2	D1	D0
0F	0	0	0	<DRIVE STRENGTH> CMOS Output buffer drive strength control				0	0	0	0

D7-D4	<DRIVE STRENGTH> Output buffer drive strength controls
0101	WEAKER than default drive
0000	DEFAULT drive strength
1111	STRONGER than default drive strength (recommended for load capacitances > 5 pF)
1010	MAXIMUM drive strength (recommended for load capacitances > 5 pF)
Other combinations	Do not use

Copyright © 2007–2008, Texas Instruments Incorporated

PIN CONFIGURATION (CMOS MODE)

RHB PACKAGE
(TOP VIEW)

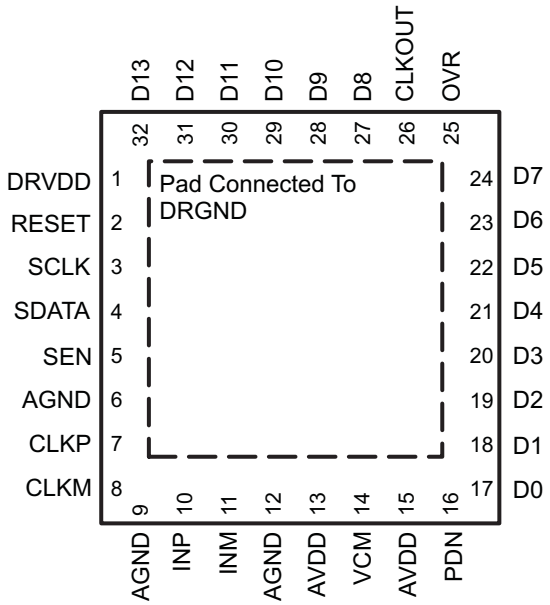

Figure 7. CMOS Mode Pinout

PIN ASSIGNMENTS – CMOS Mode

PIN NAME	DESCRIPTION	PIN TYPE	PIN NUMBER	NUMBER OF PINS
AVDD	Analog power supply	I	13, 15	2
AGND	Analog ground	I	6, 9, 12	3
CLKP, CLKM	Differential clock inputs	I	7, 8	2
INP, INM	Differential analog inputs	I	10, 11	2
VCM	Internal reference mode – common-mode voltage output. External reference mode – reference input. The voltage forced on this pin sets the internal references.	I/O	14	1
RESET	Serial interface RESET input. When using serial interface mode, the user MUST initialize the internal registers through a hardware RESET by applying a high-going pulse on this pin, or by using the software reset option. See the *SERIAL INTERFACE* section. In parallel interface mode, the user has to tie the RESET pin permanently HIGH. (SCLK, SDATA, and SEN are used as parallel pin controls in this mode.) The pin has an internal 100-kΩ pull-down resistor.	I	2	1
SCLK	This pin functions as the serial interface clock input when RESET is low. When RESET is tied high, it controls coarse gain and internal/external reference selection. Tie SCLK ***low*** for internal reference and 0 dB gain and ***high*** for internal reference and 3.5 dB gain. See Table 1. The pin has an internal 100-kΩ pull-down resistor.	I	3	1
SDATA	This pin functions as the serial interface data input when RESET is ***low***. It controls various power down modes along with the PDN pin when RESET is tied ***high***. See Table 3 for detailed information. The pin has an internal 100-kΩ pull-down resistor.	I	4	1
SEN	This pin functions as the serial interface enable input when RESET is ***low***. When RESET is high, it controls output interface type and data formats. See Table 2 for detailed information. The pin has an internal 100-kΩ pull-up resistor to DRVDD.	I	5	1
PDN	Global power-down control pin	I	16	1

Copyright © 2007–2008, Texas Instruments Incorporated

PIN ASSIGNMENTS – CMOS Mode (continued)

PIN NAME	DESCRIPTION	PIN TYPE	PIN NUMBER	NUMBER OF PINS
CLKOUT	CMOS Output clock	O	26	1
D0	CMOS Output data D0	O	17	1
D1	CMOS Output data D1	O	18	1
D2	CMOS Output data D2	O	19	1
D3	CMOS Output data D3	O	20	1
D4	CMOS Output data D4	O	21	1
D5	CMOS Output data D5	O	22	1
D6	CMOS Output data D6	O	23	1
D7	CMOS Output data D7	O	24	1
D8	CMOS Output data D8	O	27	1
D9	CMOS Output data D9	O	28	1
D10	CMOS Output data D10	O	29	1
D11	CMOS Output data D11	O	30	1
D12	CMOS Output data D12	O	31	1
D13	CMOS Output data D13	O	32	1
OVR	Indicates overvoltage on analog inputs (for differential input greater than full-scale), CMOS level	O	25	1
DRVDD	Digital supply	I	1	1
DRGND	Digital ground. Connect the pad to the ground plane. See *Board Design Considerations* in the application information section.	I	PAD	1

Copyright © 2007–2008, Texas Instruments Incorporated

PIN CONFIGURATION (LVDS MODE)

RHB PACKAGE
(TOP VIEW)

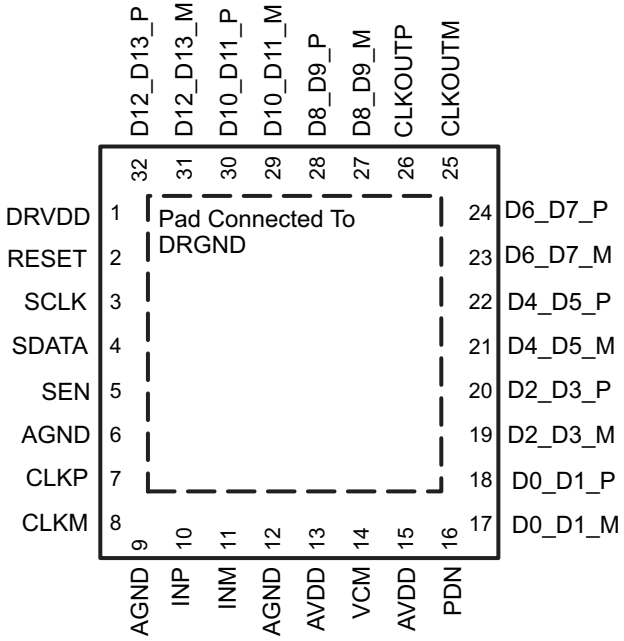

Figure 8. LVDS Mode Pinout

PIN ASSIGNMENTS – LVDS Mode

PIN NAME	DESCRIPTION	PIN TYPE	PIN NUMBER	NUMBER OF PINS
AVDD	Analog power supply	I	13, 15	2
AGND	Analog ground	I	6, 9, 12	3
CLKP, CLKM	Differential clock inputs	I	7, 8	2
INP, INM	Differential analog inputs	I	10, 11	2
VCM	Internal reference mode – common-mode voltage output. External reference mode – reference input. The voltage forced on this pin sets the internal references.	I/O	14	1
RESET	Serial interface RESET input. When using serial interface mode, the user MUST initialize the internal registers through a hardware RESET by applying a high-going pulse on this pin or by using the software reset option. See the *SERIAL INTERFACE* section. In parallel interface mode, the user has to tie the RESET pin permanently HIGH. (SCLK, SDATA, and SEN are used as parallel pin controls in this mode.) The pin has an internal 100-kΩ pull-down resistor.	I	2	1
SCLK	This pin functions as the serial interface clock input when RESET is low. When RESET is tied high, it controls coarse gain and internal/external reference selection. Tie SCLK ***low*** for internal reference and 0 dB gain and ***high*** for internal reference and 3.5 dB gain. See Table 1. The pin has an internal 100-kΩ pull-down resistor.	I	3	1
SDATA	This pin functions as the serial interface data input when RESET is ***low***. It controls various power down modes along with the PDN pin when RESET is tied ***high***. See Table 3 for detailed information. The pin has an internal 100 kΩ pull-down resistor.	I	4	1
SEN	The pin functions as the serial interface enable input when RESET is ***low***. When RESET is high, it controls output interface type and data formats. See Table 2 for detailed information. The pin has an internal 100-kΩ pull-up resistor to DRVDD.	I	5	1
PDN	Global power-down control pin	I	16	1

Copyright © 2007–2008, Texas Instruments Incorporated

PIN ASSIGNMENTS – LVDS Mode (continued)

PIN NAME	DESCRIPTION	PIN TYPE	PIN NUMBER	NUMBER OF PINS
CLKOUTP	Differential output clock, true	O	26	1
CLKOUTM	Differential output clock, complement	O	25	1
D0_D1_P	Differential output data D0 and D1 multiplexed, true	O	18	1
D0_D1_M	Differential output data D0 and D1 multiplexed, complement.	O	17	1
D2_D3_P	Differential output data D2 and D3 multiplexed, true	O	20	1
D2_D3_M	Differential output data D2 and D3 multiplexed, complement	O	19	1
D4_D5_P	Differential output data D4 and D5 multiplexed, true	O	22	1
D4_D5_M	Differential output data D4 and D5 multiplexed, complement	O	21	1
D6_D7_P	Differential output data D6 and D7 multiplexed, true	O	24	1
D6_D7_M	Differential output data D6 and D7 multiplexed, complement	O	23	1
D8_D9_P	Differential output data D8 and D9 multiplexed, true	O	28	1
D8_D9_M	Differential output data D8 and D9 multiplexed, complement	O	27	1
D10_D11_P	Differential output data D10 and D11 multiplexed, true	O	30	1
D10_D11_M	Differential output data D10 and D11 multiplexed, complement	O	29	1
D12_D13_P	Differential output data D12 and D13 multiplexed, true	O	32	1
D12_D13_M	Differential output data D12 and D13 multiplexed, complement	O	31	1
DRVDD	Digital supply	I	1	1
DRGND	Digital ground. Connect the pad to the ground plane. See *Board Design Considerations* in application information section.	I	PAD	1

Copyright © 2007–2008, Texas Instruments Incorporated

TYPICAL CHARACTERISTICS - ADS6145 (F_S= 125 MSPS)

All plots are at 25°C, AVDD = DRVDD = 3.3 V, maximum rated sampling frequency, sine wave input clock, 1.5 V_{PP} differential clock amplitude, 50% clock duty cycle, –1 dBFS differential analog input, internal reference mode, 0 dB gain, CMOS output interface (unless otherwise noted)

FFT for 20 MHz INPUT SIGNAL

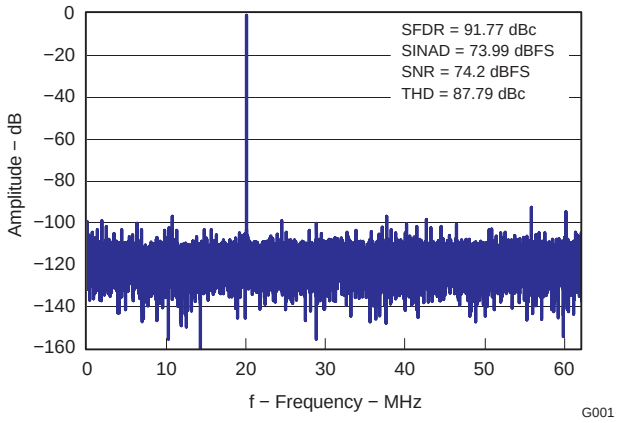

Figure 9.

FFT for 70 MHz INPUT SIGNAL

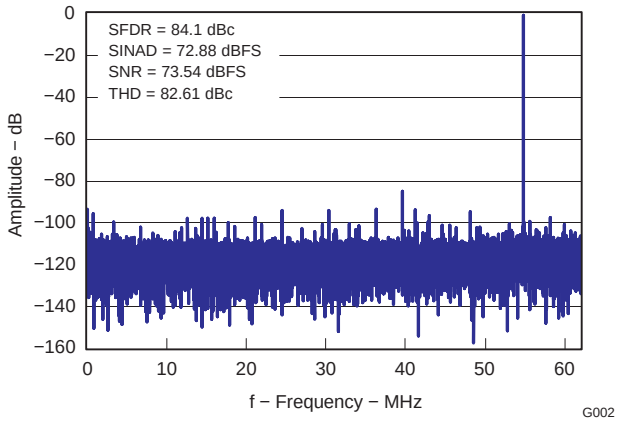

Figure 10.

FFT for 230 MHz INPUT SIGNAL

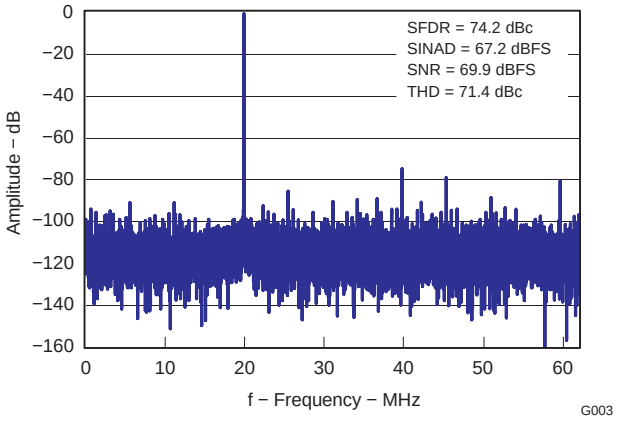

Figure 11.

INTERMODULATION DISTORTION (IMD) vs FREQUENCY

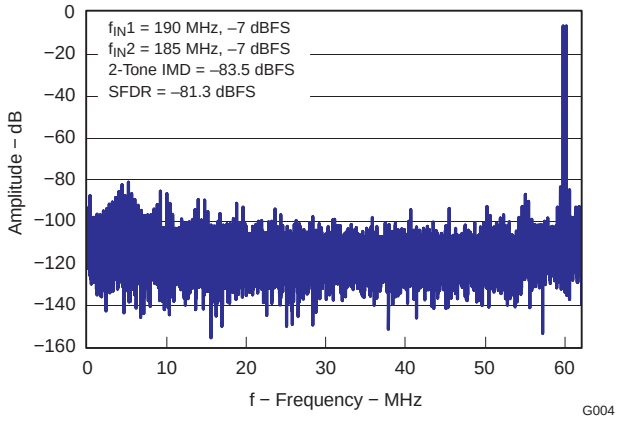

Figure 12.

SFDR vs INPUT FREQUENCY

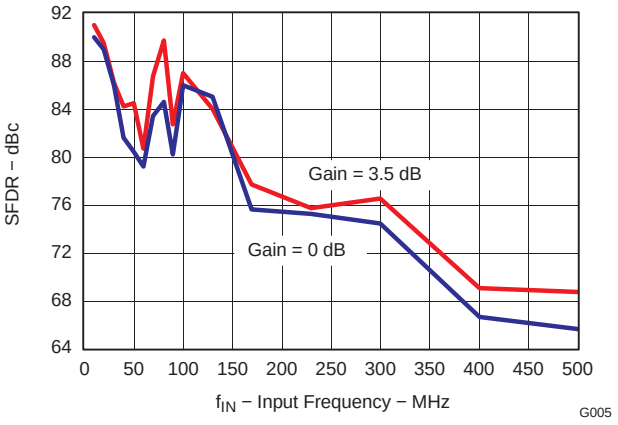

Figure 13.

SNR vs INPUT FREQUENCY

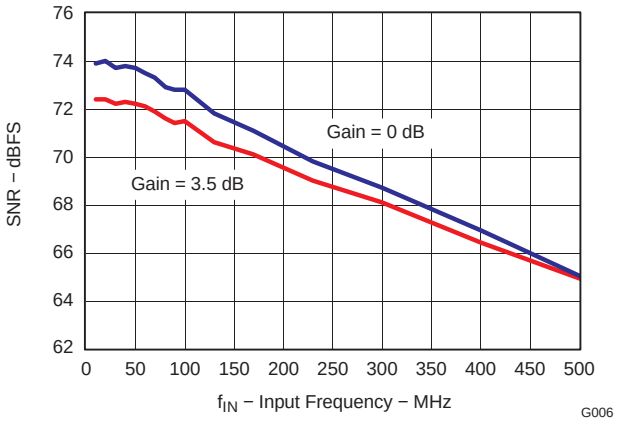

Figure 14.

Copyright © 2007–2008, Texas Instruments Incorporated

TYPICAL CHARACTERISTICS - ADS6145 (F_S= 125 MSPS) (continued)

All plots are at 25°C, AVDD = DRVDD = 3.3 V, maximum rated sampling frequency, sine wave input clock, 1.5 V_{PP} differential clock amplitude, 50% clock duty cycle, –1 dBFS differential analog input, internal reference mode, 0 dB gain, CMOS output interface (unless otherwise noted)

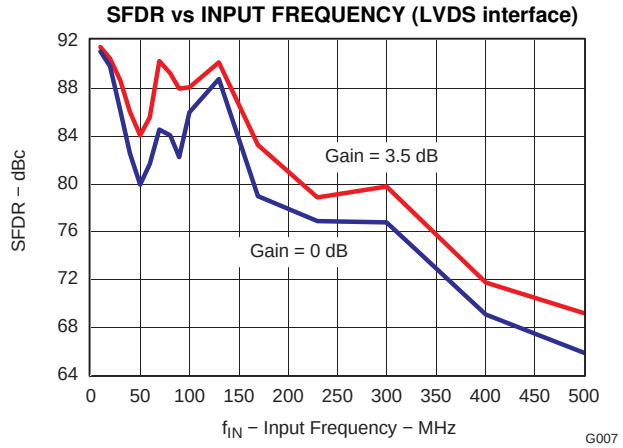

Figure 15.

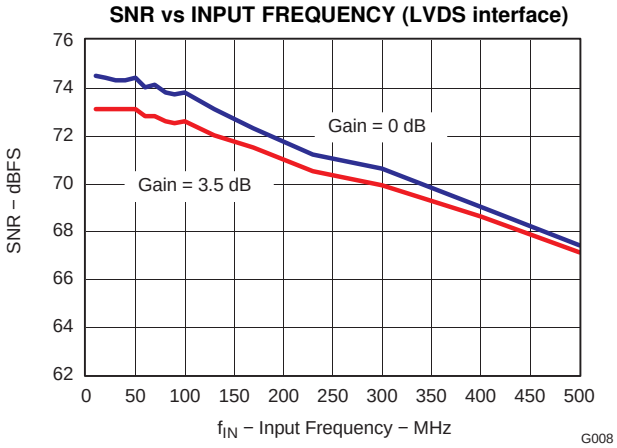

Figure 16.

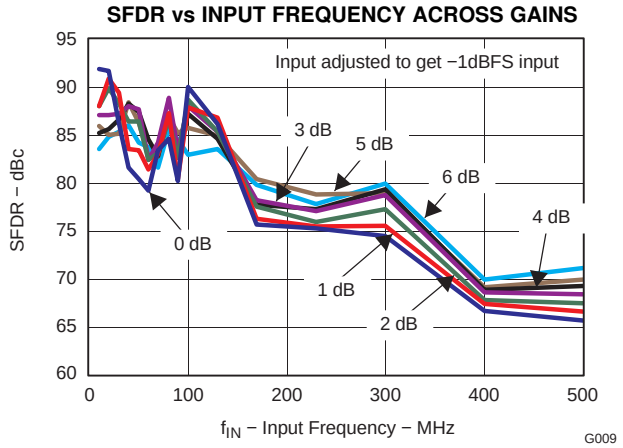

Figure 17.

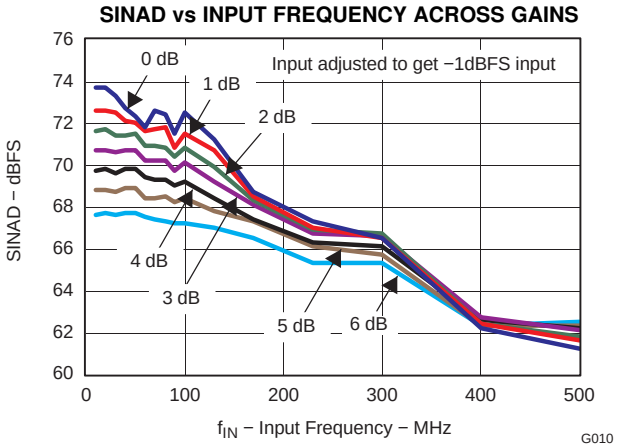

Figure 18.

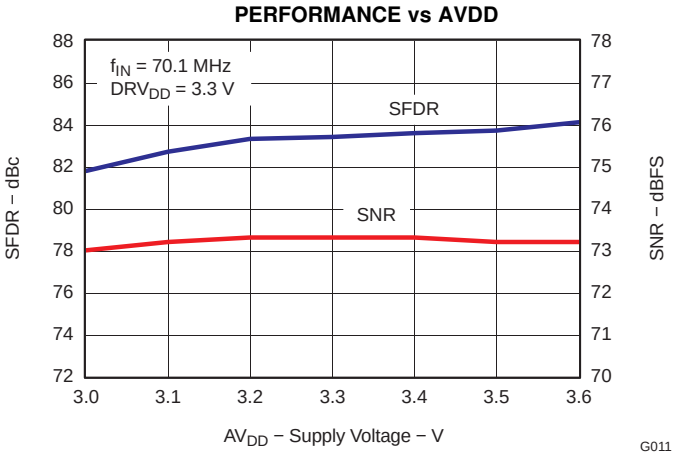

Figure 19.

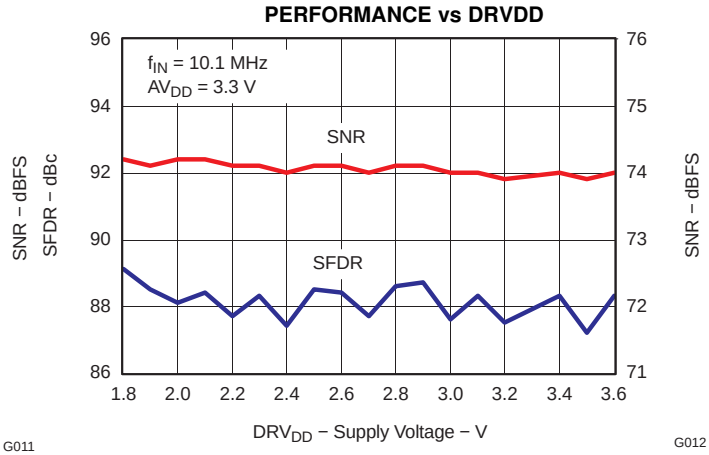

Figure 20.

Copyright © 2007–2008, Texas Instruments Incorporated

TYPICAL CHARACTERISTICS - ADS6145 (F_S= 125 MSPS) (continued)

All plots are at 25°C, AVDD = DRVDD = 3.3 V, maximum rated sampling frequency, sine wave input clock, 1.5 V_{PP} differential clock amplitude, 50% clock duty cycle, –1 dBFS differential analog input, internal reference mode, 0 dB gain, CMOS output interface (unless otherwise noted)

PERFORMANCE vs TEMPERATURE

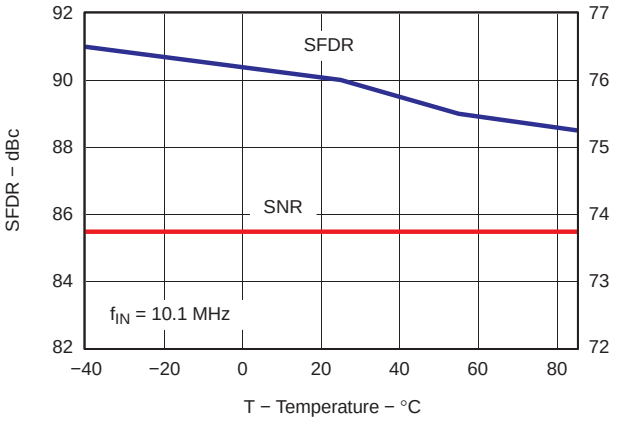

Figure 21.

PERFORMANCE vs INPUT AMPLITUDE

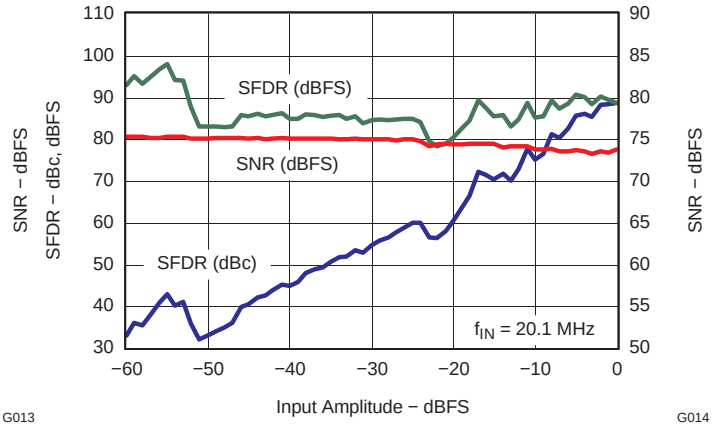

Figure 22.

PERFORMANCE vs CLOCK AMPLITUDE

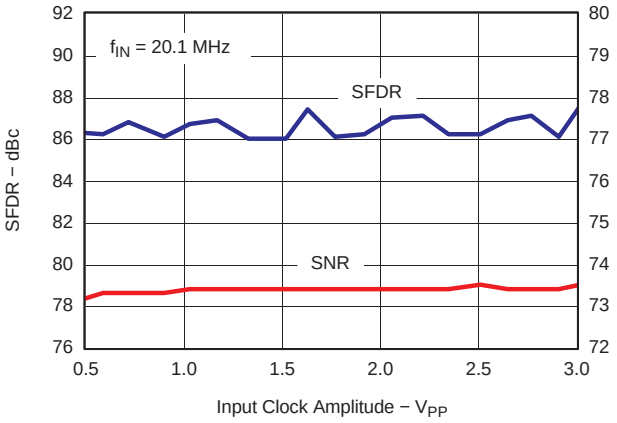

Figure 23.

PERFORMANCE vs INPUT CLOCK DUTY CYCLE

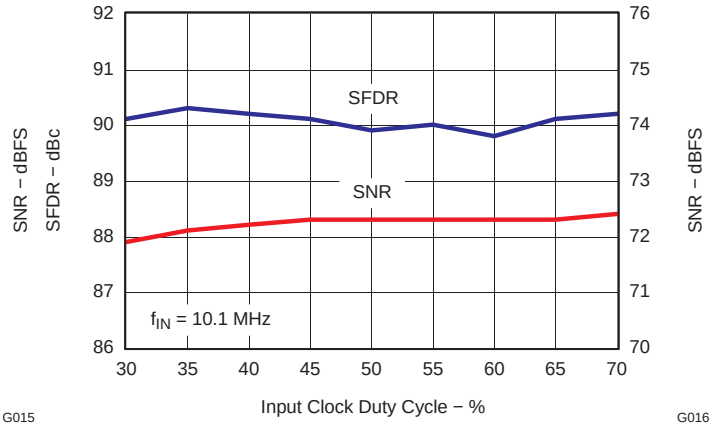

Figure 24.

OUTPUT NOISE HISTOGRAM
(inputs tied to common-mode)

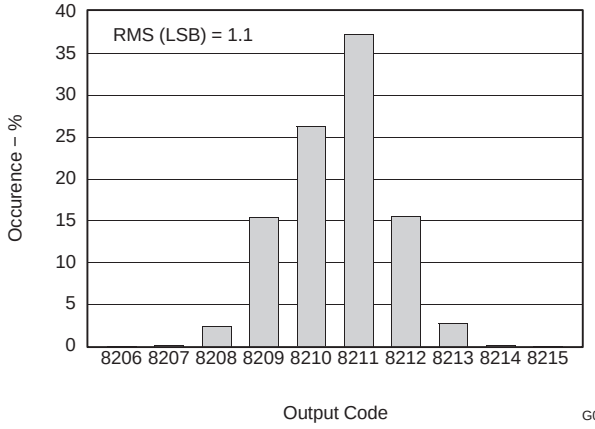

Figure 25.

PERFORMANCE IN EXTERNAL REFERENCE MODE

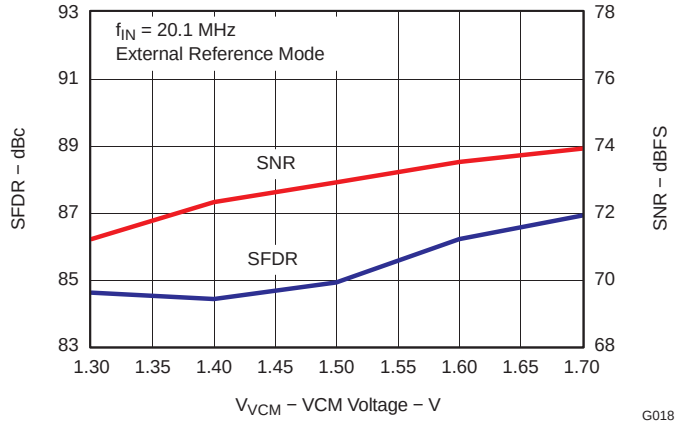

Figure 26.

Copyright © 2007–2008, Texas Instruments Incorporated

TYPICAL CHARACTERISTICS - ADS6144 (F_S= 105 MSPS)

All plots are at 25°C, AVDD = DRVDD = 3.3 V, maximum rated sampling frequency, sine wave input clock, 1.5 V_{PP} differential clock amplitude, 50% clock duty cycle, –1 dBFS differential analog input, internal reference mode, 0 dB gain, CMOS output interface (unless otherwise noted)

FFT for 20 MHz INPUT SIGNAL

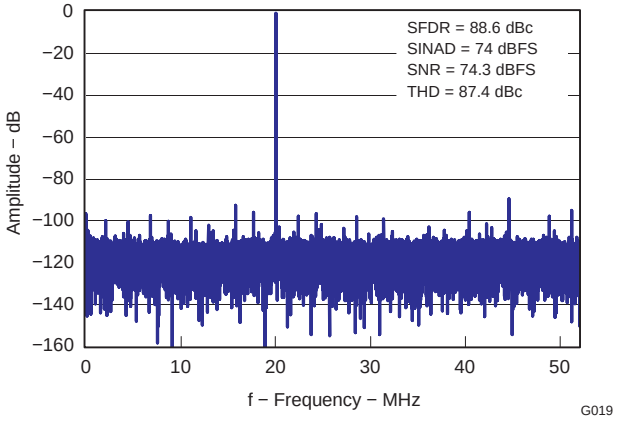

Figure 27.

FFT for 80 MHz INPUT SIGNAL

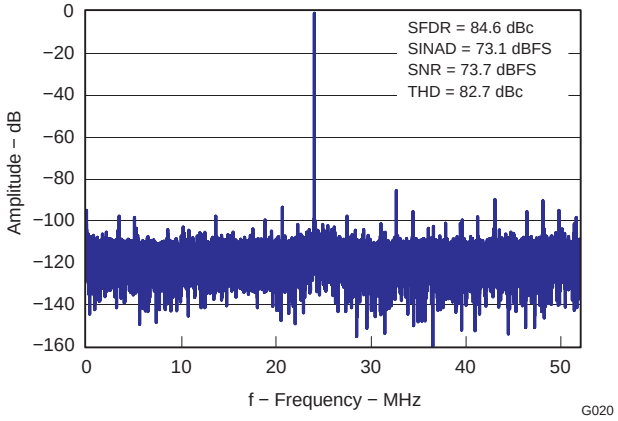

Figure 28.

FFT for 230 MHz INPUT SIGNAL

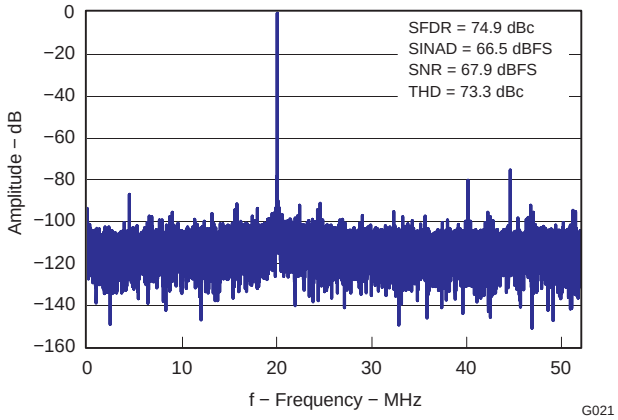

Figure 29.

INTERMODULATION DISTORTION (IMD) vs FREQUENCY

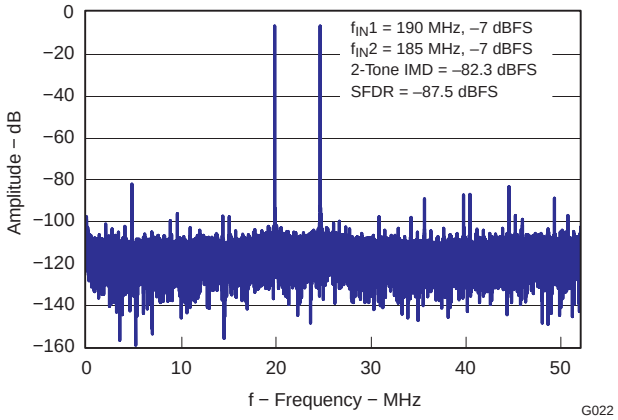

Figure 30.

SFDR vs INPUT FREQUENCY

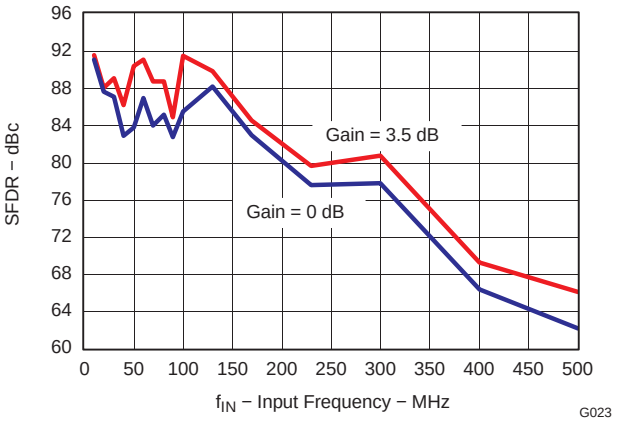

Figure 31.

SNR vs INPUT FREQUENCY

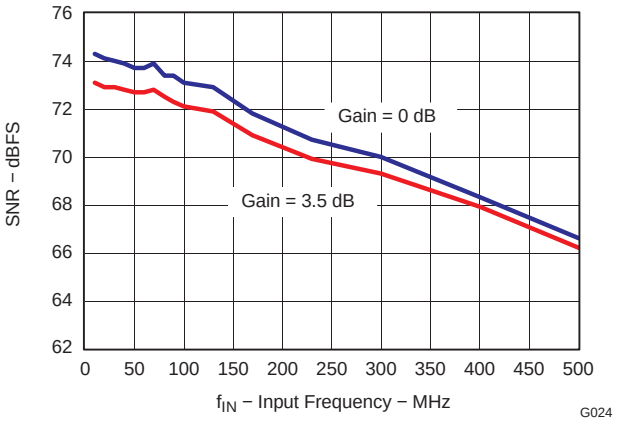

Figure 32.

Copyright © 2007–2008, Texas Instruments Incorporated

TYPICAL CHARACTERISTICS - ADS6144 (F_S= 105 MSPS) (continued)

All plots are at 25°C, AVDD = DRVDD = 3.3 V, maximum rated sampling frequency, sine wave input clock, 1.5 V_{PP} differential clock amplitude, 50% clock duty cycle, –1 dBFS differential analog input, internal reference mode, 0 dB gain, CMOS output interface (unless otherwise noted)

SFDR vs INPUT FREQUENCY (LVDS interface)

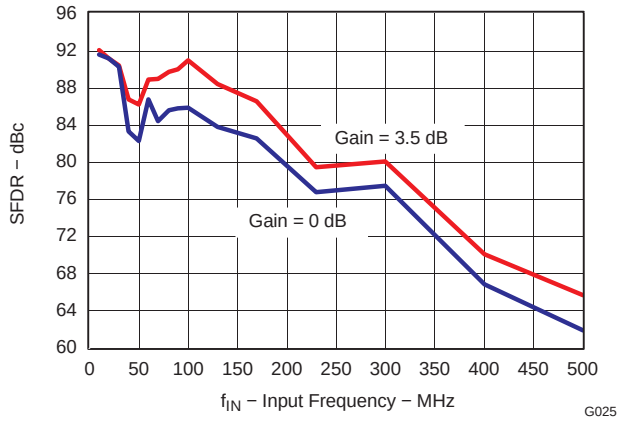

Figure 33.

SNR vs INPUT FREQUENCY (LVDS interface)

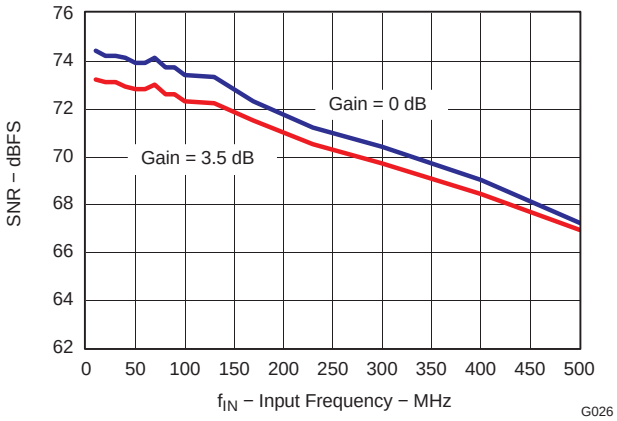

Figure 34.

SFDR vs INPUT FREQUENCY ACROSS GAINS

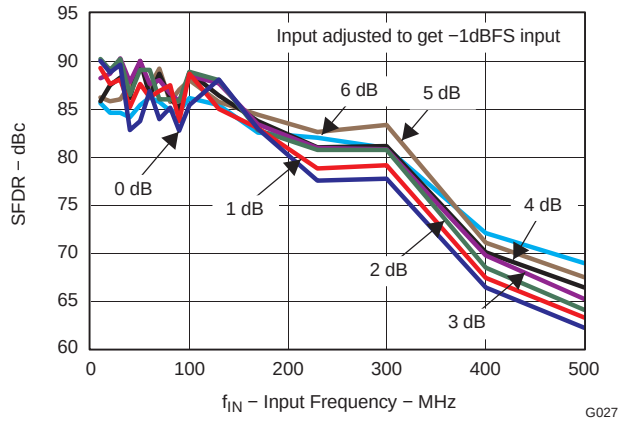

Figure 35.

SINAD vs INPUT FREQUENCY ACROSS GAINS

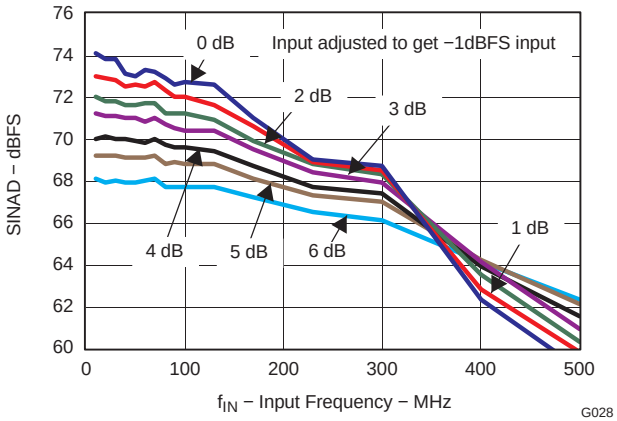

Figure 36.

PERFORMANCE vs AVDD

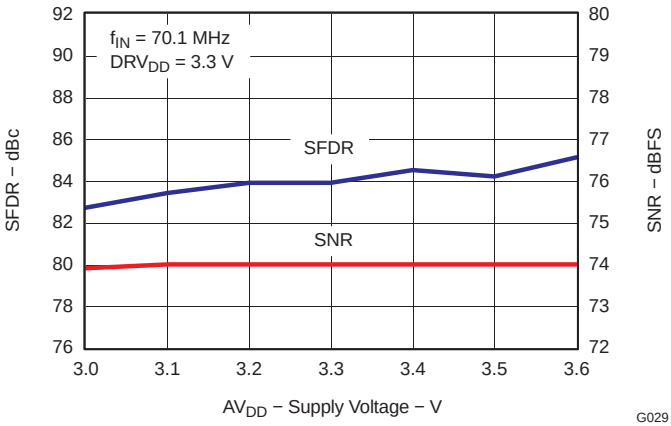

Figure 37.

PERFORMANCE vs DRVDD

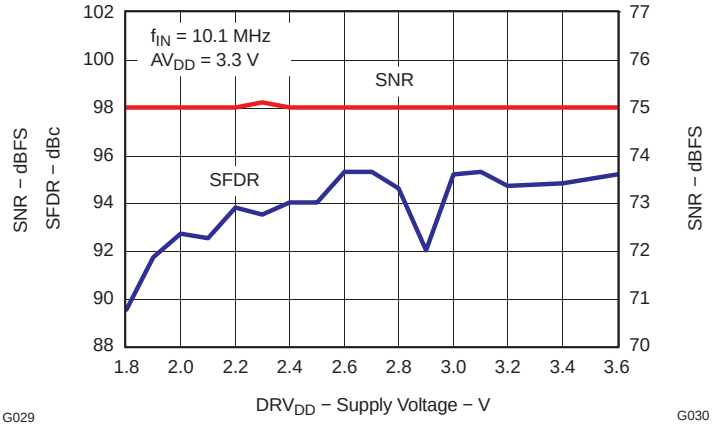

Figure 38.

Copyright © 2007–2008, Texas Instruments Incorporated

TYPICAL CHARACTERISTICS - ADS6144 (F_S= 105 MSPS) (continued)

All plots are at 25°C, AVDD = DRVDD = 3.3 V, maximum rated sampling frequency, sine wave input clock, 1.5 V_{PP} differential clock amplitude, 50% clock duty cycle, –1 dBFS differential analog input, internal reference mode, 0 dB gain, CMOS output interface (unless otherwise noted)

PERFORMANCE vs TEMPERATURE

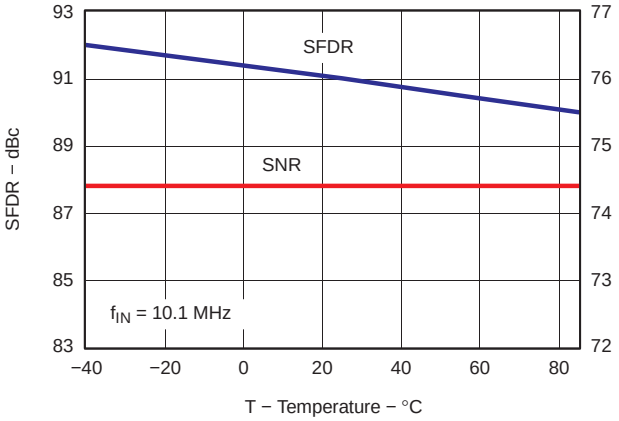

Figure 39.

PERFORMANCE vs INPUT AMPLITUDE

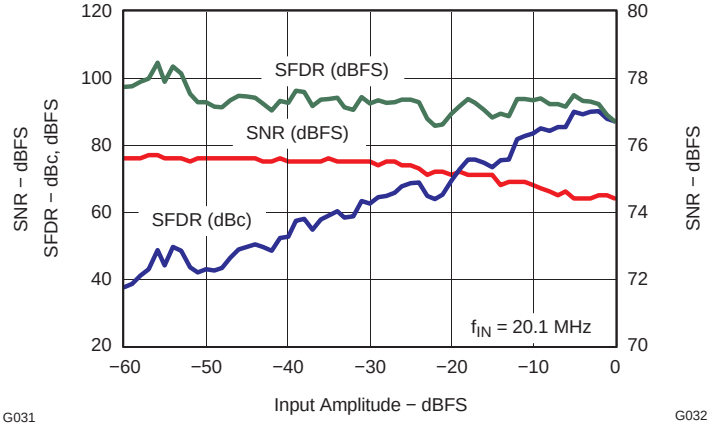

Figure 40.

PERFORMANCE vs CLOCK AMPLITUDE

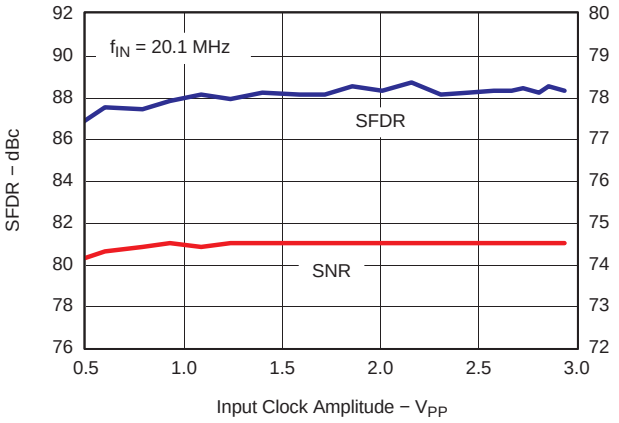

Figure 41.

PERFORMANCE vs INPUT CLOCK DUTY CYCLE

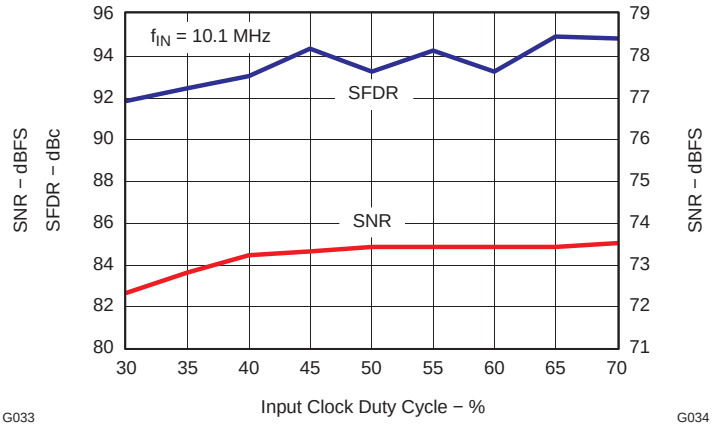

Figure 42.

OUTPUT NOISE HISTOGRAM WITH INPUTS TIED TO COMMON-MODE

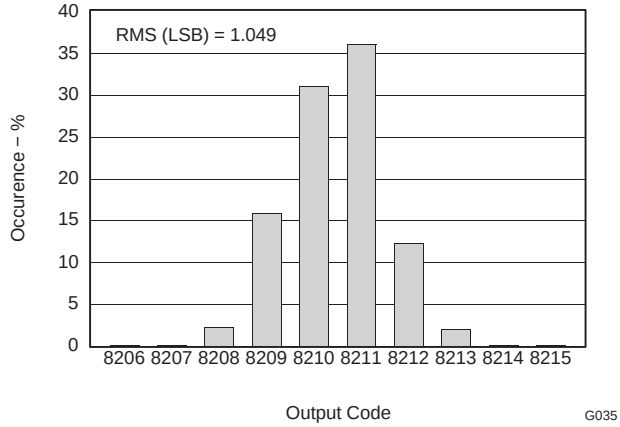

Figure 43.

PERFORMANCE IN EXTERNAL REFERENCE MODE

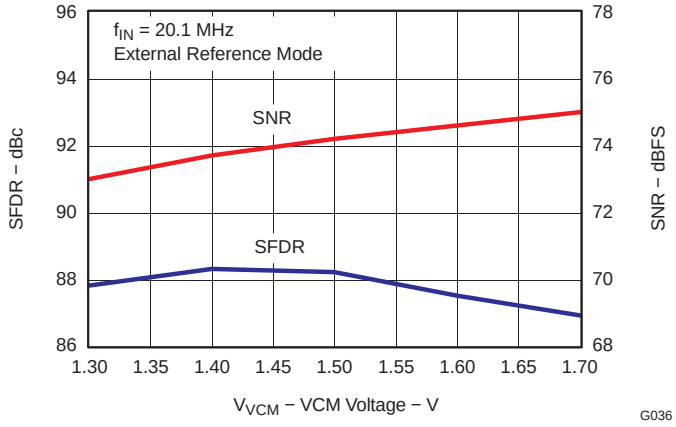

Figure 44.

Copyright © 2007–2008, Texas Instruments Incorporated

TYPICAL CHARACTERISTICS - ADS6143 (F_S= 80 MSPS)

All plots are at 25°C, AVDD = DRVDD = 3.3 V, maximum rated sampling frequency, sine wave input clock, 1.5 V_{PP} differential clock amplitude, 50% clock duty cycle, –1 dBFS differential analog input, internal reference mode, 0 dB gain, CMOS output interface (unless otherwise noted)

FFT for 20 MHz INPUT SIGNAL

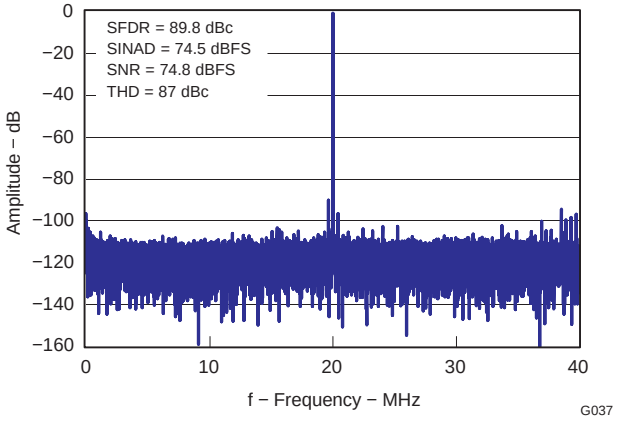

Figure 45.

FFT for 70 MHz INPUT SIGNAL

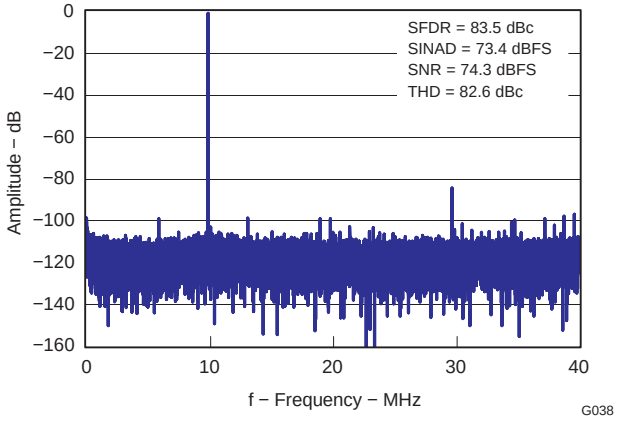

Figure 46.

FFT for 230 MHz INPUT SIGNAL

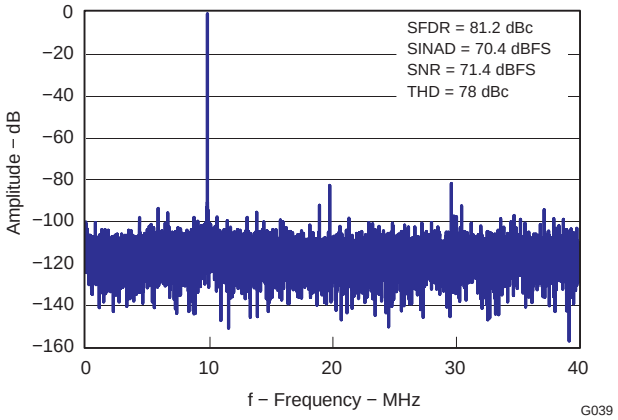

Figure 47.

INTERMODULATION DISTORTION (IMD) vs FREQUENCY

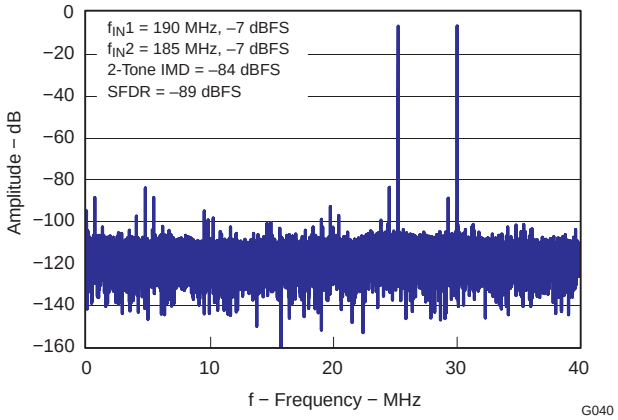

Figure 48.

SFDR vs INPUT FREQUENCY

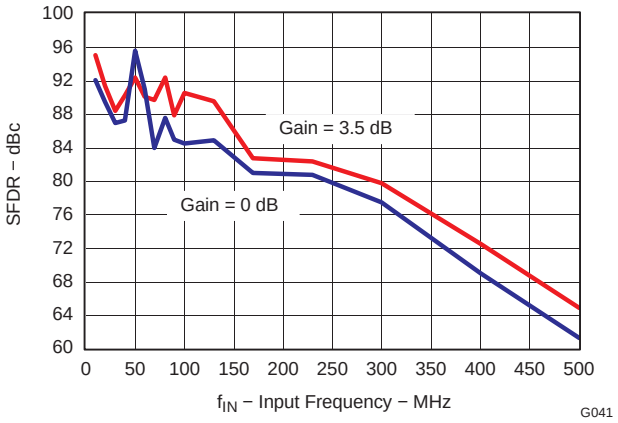

Figure 49.

SNR vs INPUT FREQUENCY

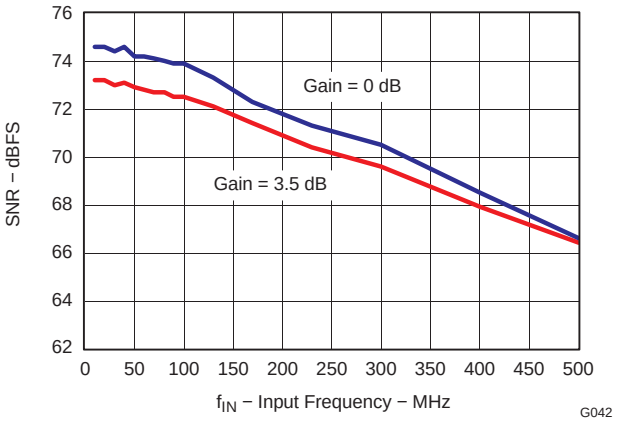

Figure 50.

Copyright © 2007–2008, Texas Instruments Incorporated

TYPICAL CHARACTERISTICS - ADS6143 (F_S= 80 MSPS) (continued)

All plots are at 25°C, AVDD = DRVDD = 3.3 V, maximum rated sampling frequency, sine wave input clock, 1.5 V_{PP} differential clock amplitude, 50% clock duty cycle, –1 dBFS differential analog input, internal reference mode, 0 dB gain, CMOS output interface (unless otherwise noted)

SFDR vs INPUT FREQUENCY (LVDS interface)

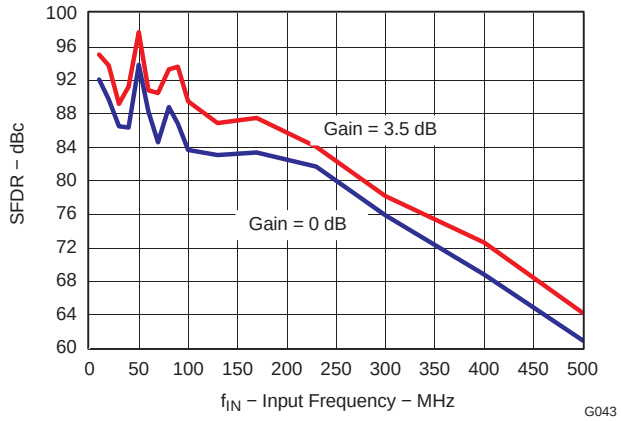

Figure 51.

SNR vs INPUT FREQUENCY (LVDS interface)

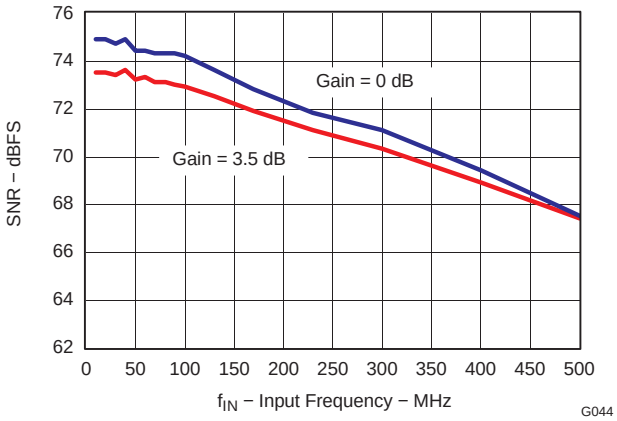

Figure 52.

SFDR vs INPUT FREQUENCY ACROSS GAINS

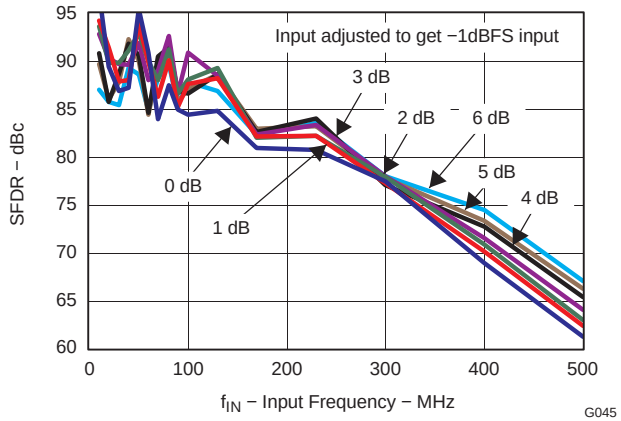

Figure 53.

SINAD vs INPUT FREQUENCY ACROSS GAINS

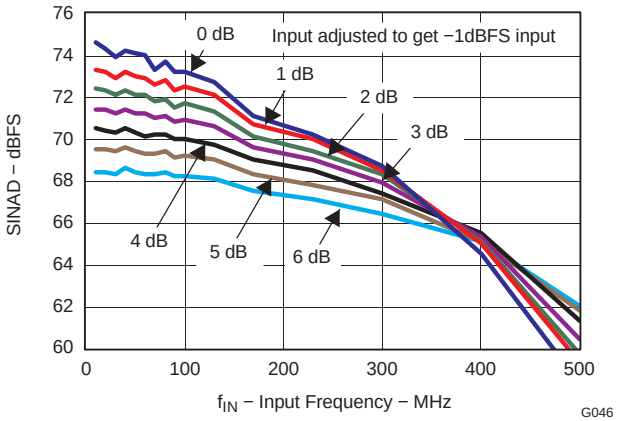

Figure 54.

PERFORMANCE vs AVDD

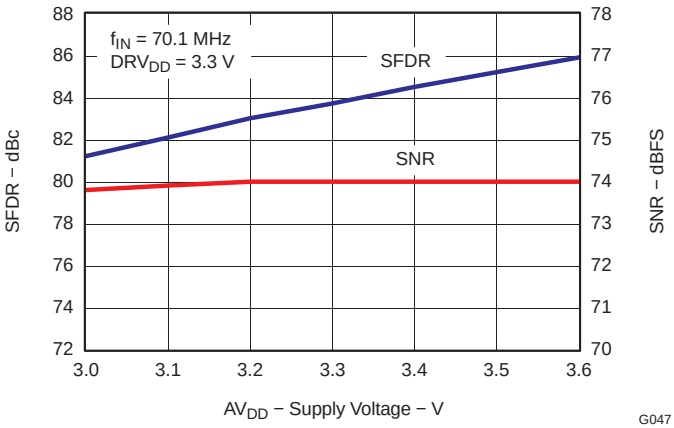

Figure 55.

PERFORMANCE vs DRVDD

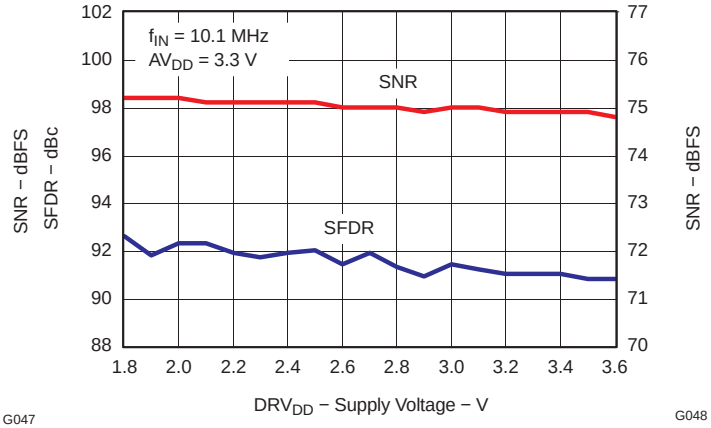

Figure 56.

Copyright © 2007–2008, Texas Instruments Incorporated

TYPICAL CHARACTERISTICS - ADS6143 (F_S= 80 MSPS) (continued)

All plots are at 25°C, AVDD = DRVDD = 3.3 V, maximum rated sampling frequency, sine wave input clock, 1.5 V_{PP} differential clock amplitude, 50% clock duty cycle, –1 dBFS differential analog input, internal reference mode, 0 dB gain, CMOS output interface (unless otherwise noted)

PERFORMANCE vs TEMPERATURE

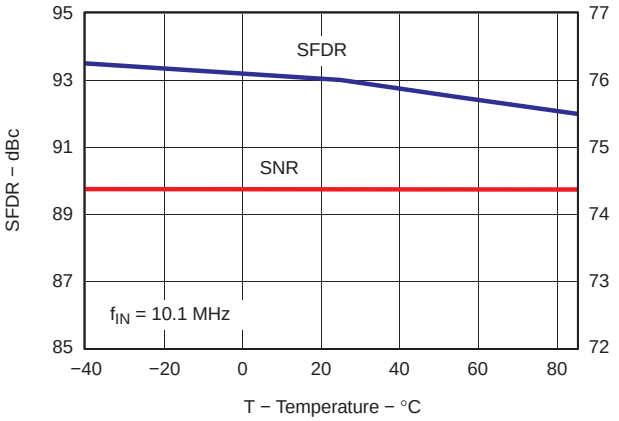

Figure 57.

PERFORMANCE vs INPUT AMPLITUDE

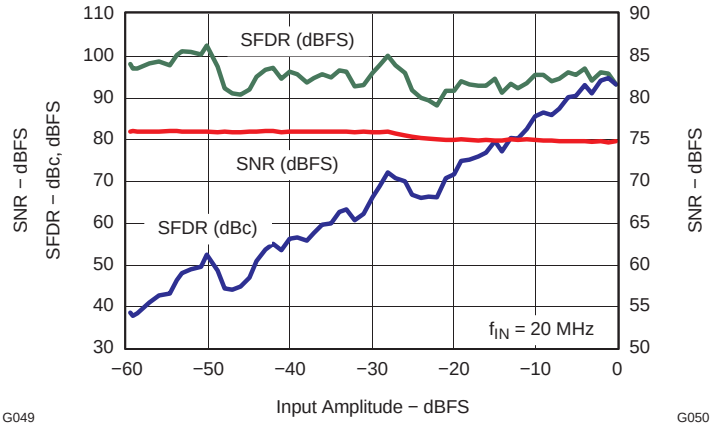

Figure 58.

PERFORMANCE vs CLOCK AMPLITUDE

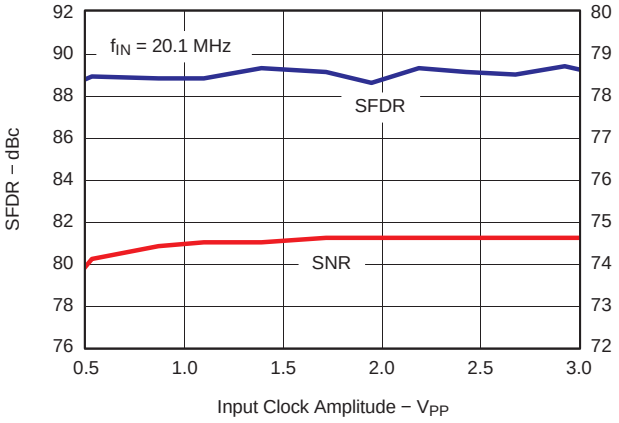

Figure 59.

PERFORMANCE vs INPUT CLOCK DUTY CYCLE

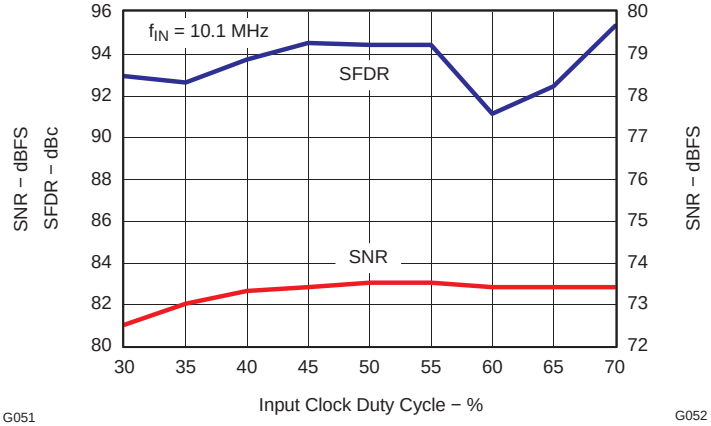

Figure 60.

OUTPUT NOISE HISTOGRAM WITH INPUTS TIED TO COMMON-MODE

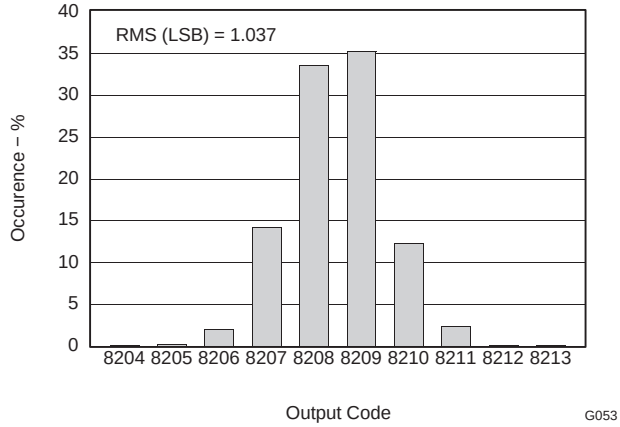

Figure 61.

PERFORMANCE IN EXTERNAL REFERENCE MODE

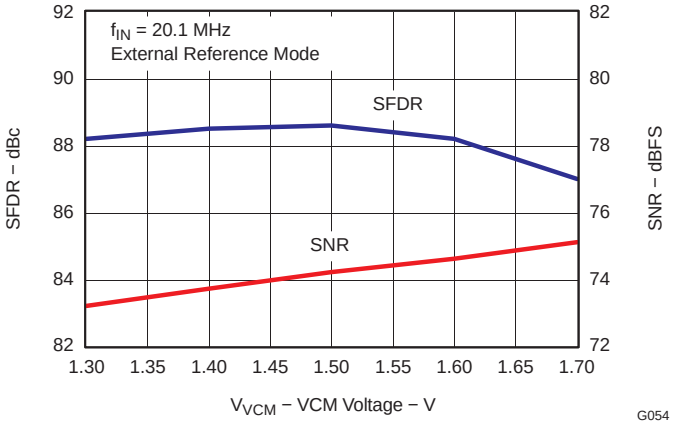

Figure 62.

Copyright © 2007–2008, Texas Instruments Incorporated

TYPICAL CHARACTERISTICS - ADS6142 (F_S= 65 MSPS)

All plots are at 25°C, AVDD = DRVDD = 3.3 V, maximum rated sampling frequency, sine wave input clock, 1.5 V_{PP} differential clock amplitude, 50% clock duty cycle, –1 dBFS differential analog input, internal reference mode, 0 dB gain, CMOS output interface (unless otherwise noted)

FFT for 20 MHz INPUT SIGNAL

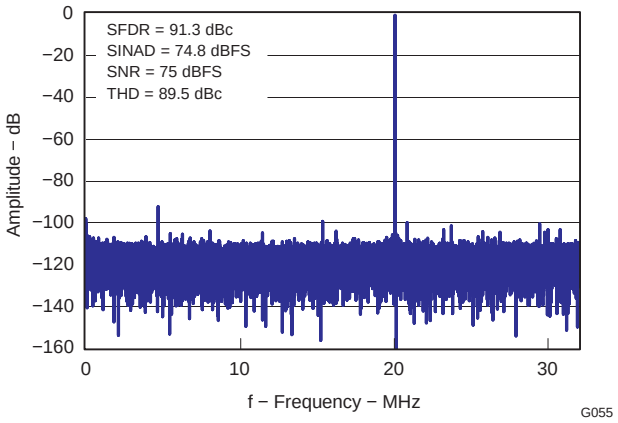

Figure 63.

FFT for 90 MHz INPUT SIGNAL

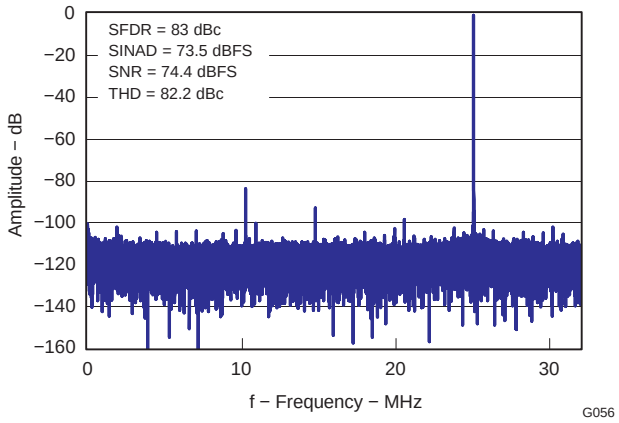

Figure 64.

FFT for 230 MHz INPUT SIGNAL

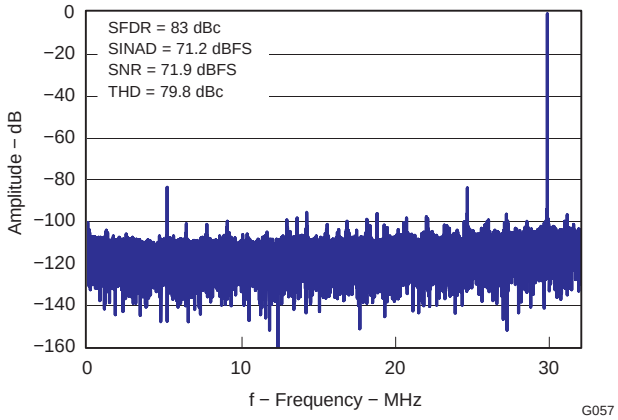

Figure 65.

INTERMODULATION DISTORTION (IMD) vs FREQUENCY

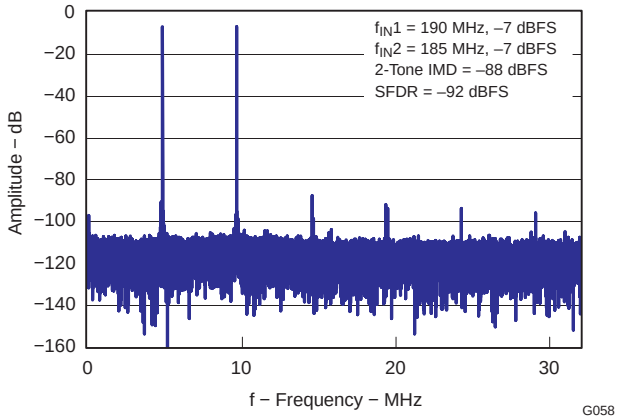

Figure 66.

SFDR vs INPUT FREQUENCY

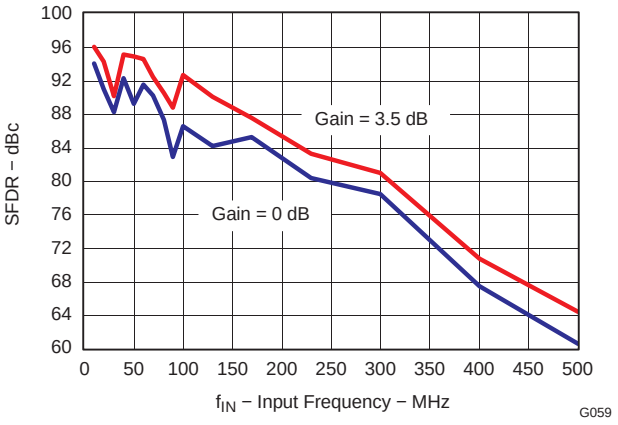

Figure 67.

SNR vs INPUT FREQUENCY

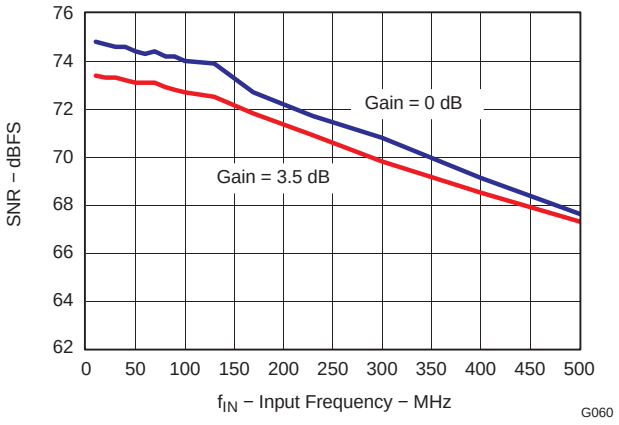

Figure 68.

Copyright © 2007–2008, Texas Instruments Incorporated

TYPICAL CHARACTERISTICS - ADS6142 (F_S= 65 MSPS) (continued)

All plots are at 25°C, AVDD = DRVDD = 3.3 V, maximum rated sampling frequency, sine wave input clock, 1.5 V_{PP} differential clock amplitude, 50% clock duty cycle, –1 dBFS differential analog input, internal reference mode, 0 dB gain, CMOS output interface (unless otherwise noted)

SFDR vs INPUT FREQUENCY (LVDS interface)

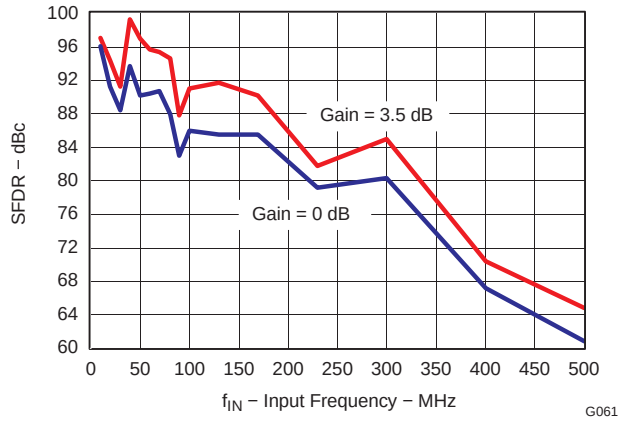

Figure 69.

SNR vs INPUT FREQUENCY (LVDS interface)

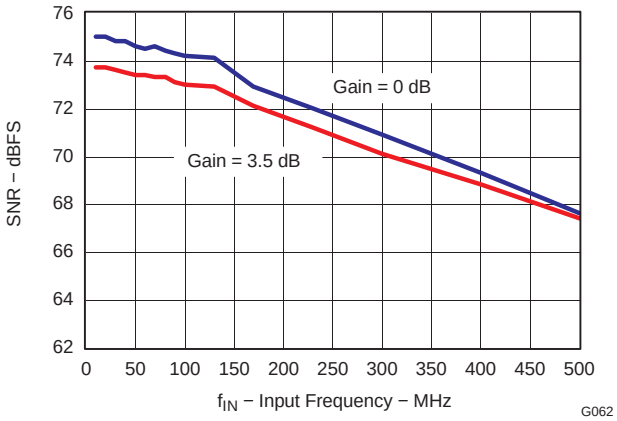

Figure 70.

SFDR vs INPUT FREQUENCY ACROSS GAINS

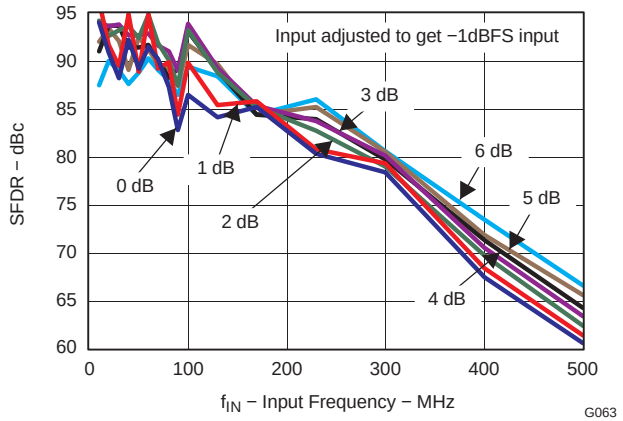

Figure 71.

SINAD vs INPUT FREQUENCY ACROSS GAINS

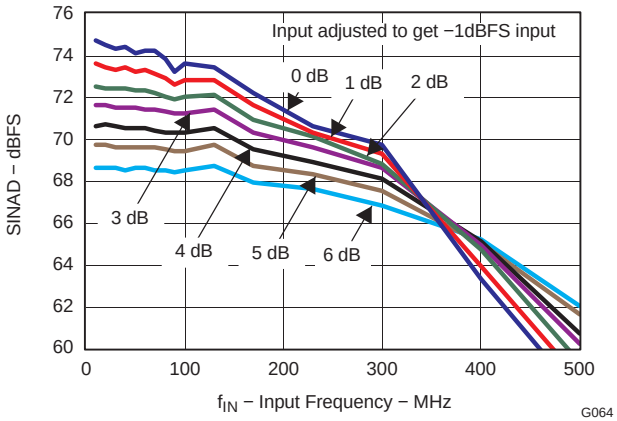

Figure 72.

PERFORMANCE vs AVDD

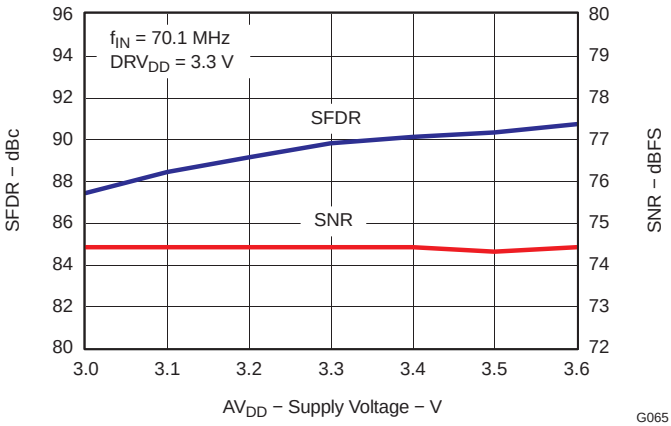

Figure 73.

PERFORMANCE vs DRVDD

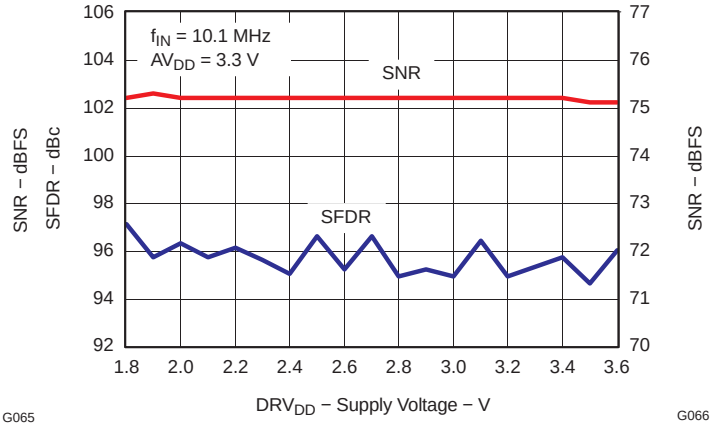

Figure 74.

Copyright © 2007–2008, Texas Instruments Incorporated

TYPICAL CHARACTERISTICS - ADS6142 (F_S= 65 MSPS) (continued)

All plots are at 25°C, AVDD = DRVDD = 3.3 V, maximum rated sampling frequency, sine wave input clock, 1.5 V_{PP} differential clock amplitude, 50% clock duty cycle, –1 dBFS differential analog input, internal reference mode, 0 dB gain, CMOS output interface (unless otherwise noted)

PERFORMANCE vs TEMPERATURE

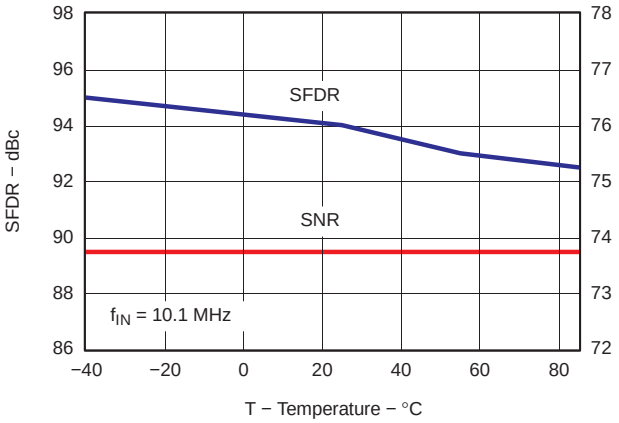

Figure 75.

PERFORMANCE vs INPUT AMPLITUDE

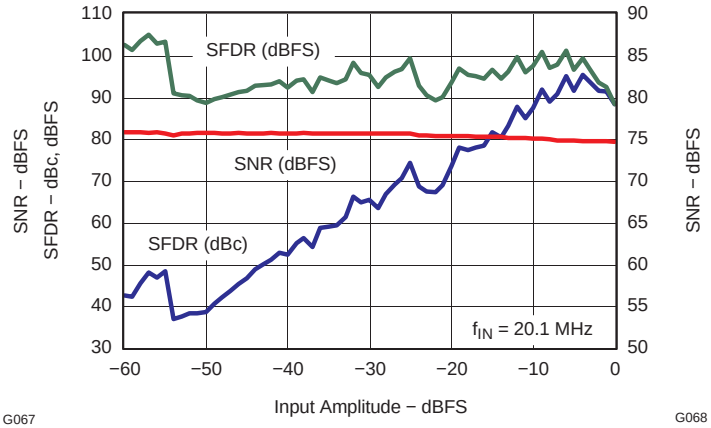

Figure 76.

PERFORMANCE vs CLOCK AMPLITUDE

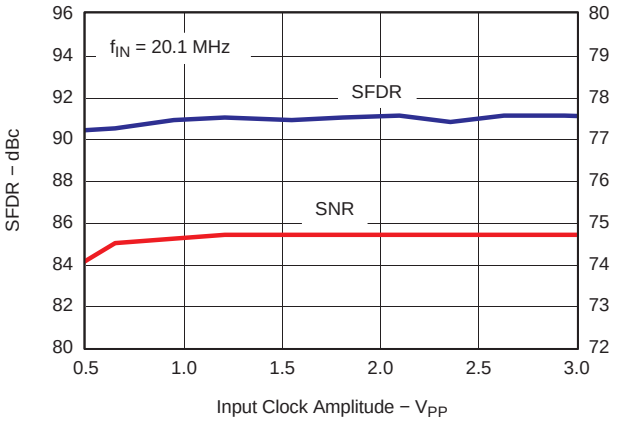

Figure 77.

PERFORMANCE vs INPUT CLOCK DUTY CYCLE

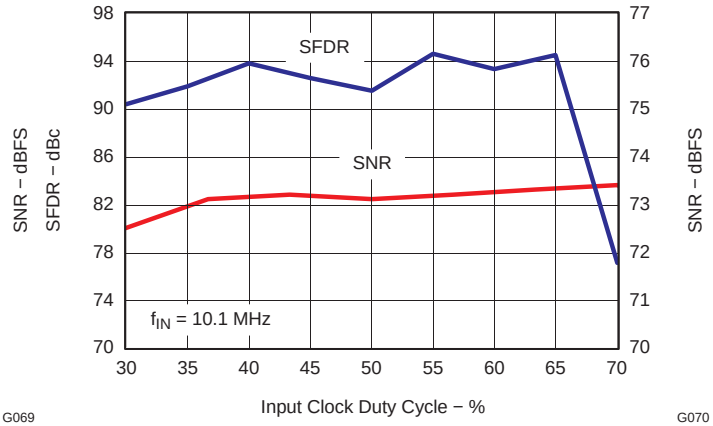

Figure 78.

OUTPUT NOIS HISTOGRAM WITH INPUTS TIED TO COMMON-MODE

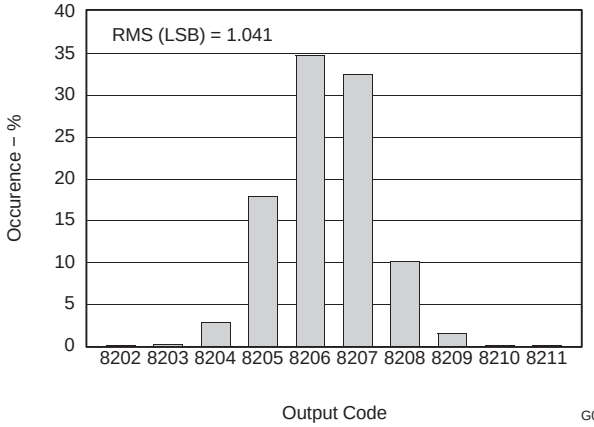

Figure 79.

PERFORMANCE IN EXTERNAL REFERENCE MODE

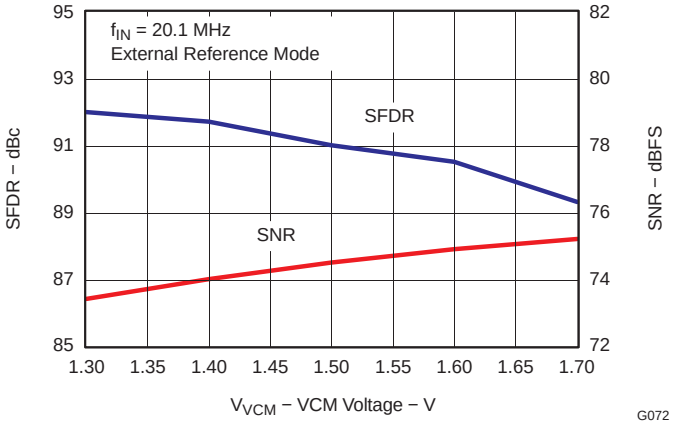

Figure 80.

Copyright © 2007–2008, Texas Instruments Incorporated

TYPICAL CHARACTERISTICS - LOW SAMPLING FREQUENCIES

All plots are at 25°C, AVDD = DRVDD = 3.3 V, sine wave input clock, 1.5 V_{PP} differential clock amplitude, 50% clock duty cycle, –1 dBFS differential analog input, internal reference mode, 0 dB gain, CMOS output interface (unless otherwise noted)

F_S = 40 MSPS

SFDR vs INPUT FREQUENCY

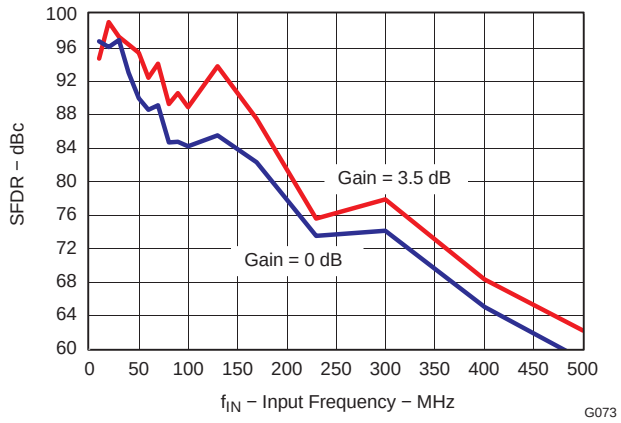

Figure 81.

SNR vs INPUT FREQUENCY

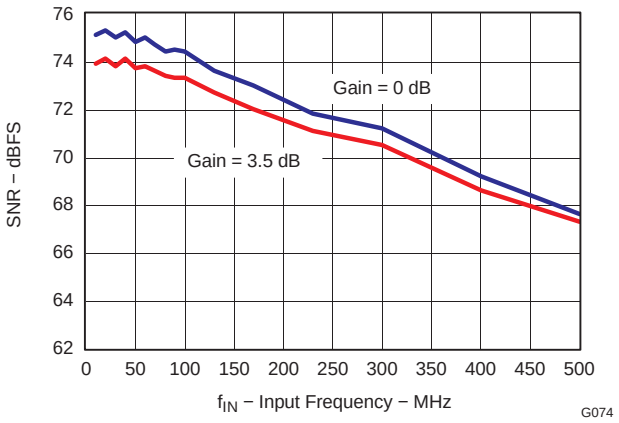

Figure 82.

F_S = 25 MSPS

SFDR vs INPUT FREQUENCY

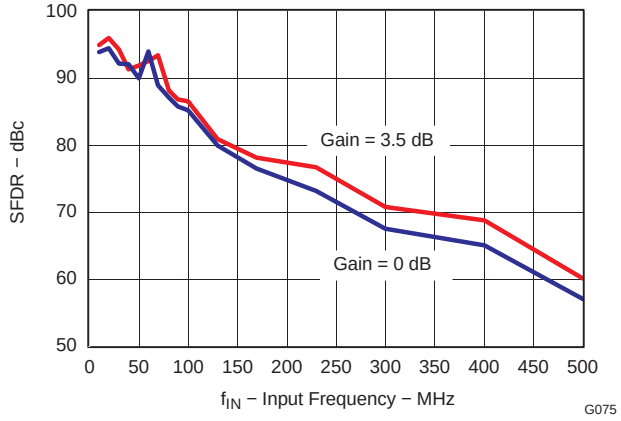

Figure 83.

SNR vs INPUT FREQUENCY

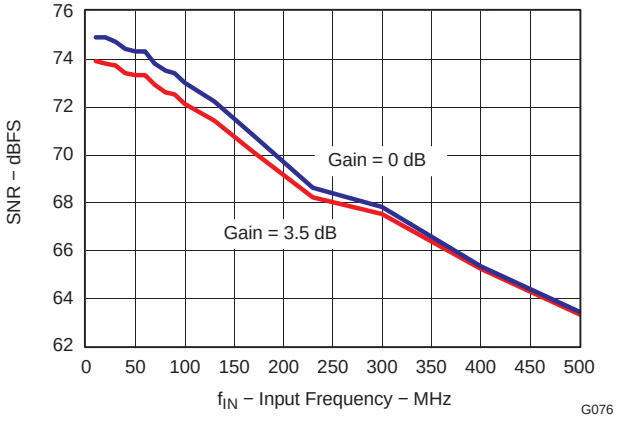

Figure 84.

COMMON PLOTS

All plots are at 25°C, AVDD = DRVDD = 3.3 V, sine wave input clock, 1.5 V_{PP} differential clock amplitude, 50% clock duty cycle, –1 dBFS differential analog input, internal reference mode, 0 dB gain, CMOS output interface (unless otherwise noted)

COMMON-MODE REJECTION RATIO vs FREQUENCY

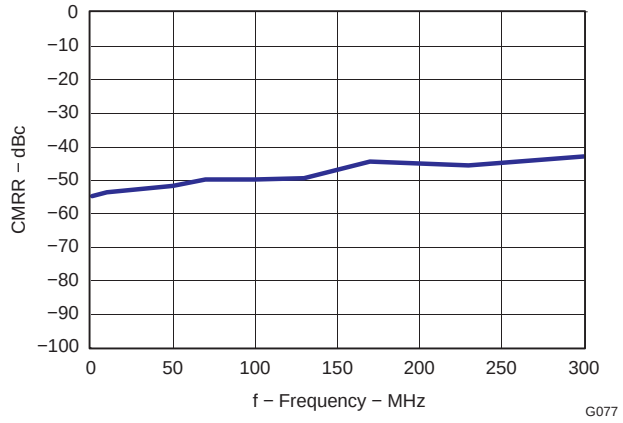

Figure 85.

POWER DISSIPATION vs SAMPLING FREQUENCY (DDR LVDS and CMOS)

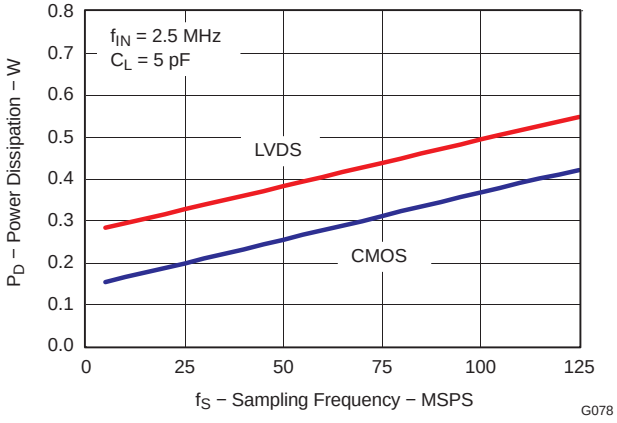

Figure 86.

DRVDD current vs SAMPLING FREQUENCY ACROSS LOAD CAPACITANCE (CMOS)

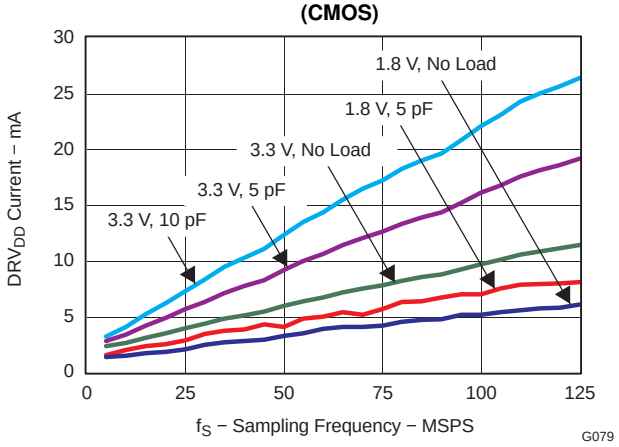

Figure 87.

Copyright © 2007–2008, Texas Instruments Incorporated

Contour Plots Across Input and Sampling Frequencies

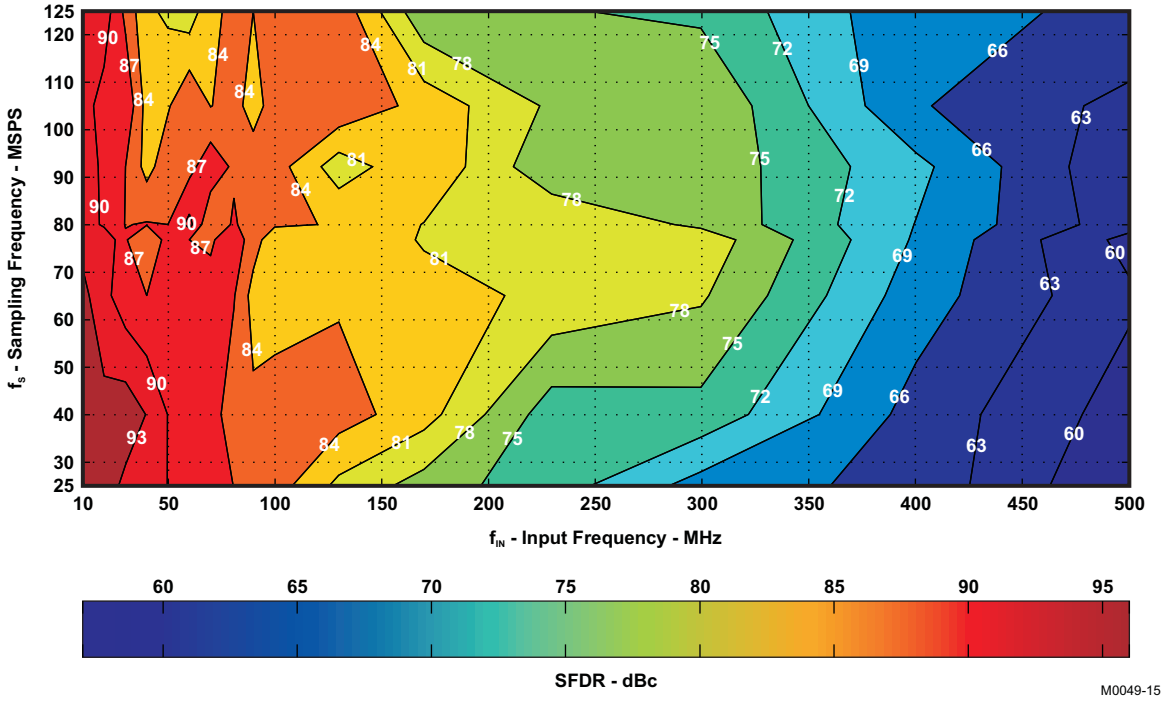

Figure 88. SFDR Contour (no gain, F_S = 2 V_{PP})

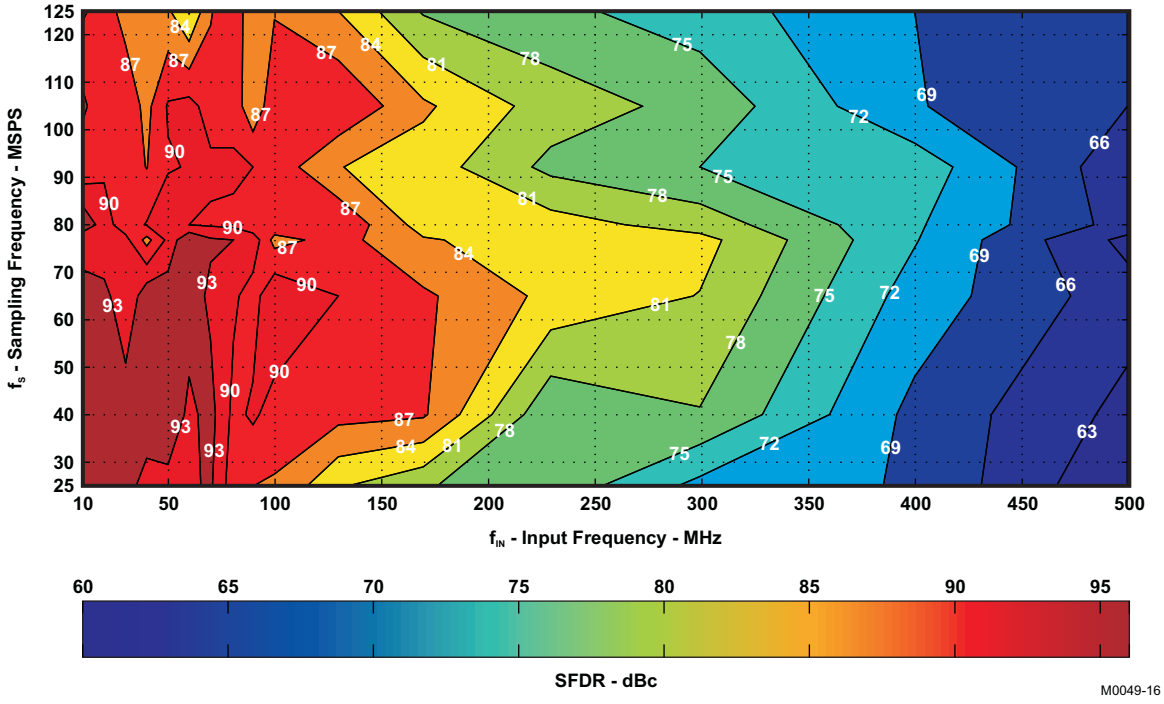

Figure 89. SFDR Contour (with 3.5 dB coarse gain, F_S = 1.34 V_{PP})

Contour Plots Across Input and Sampling Frequencies (continued)

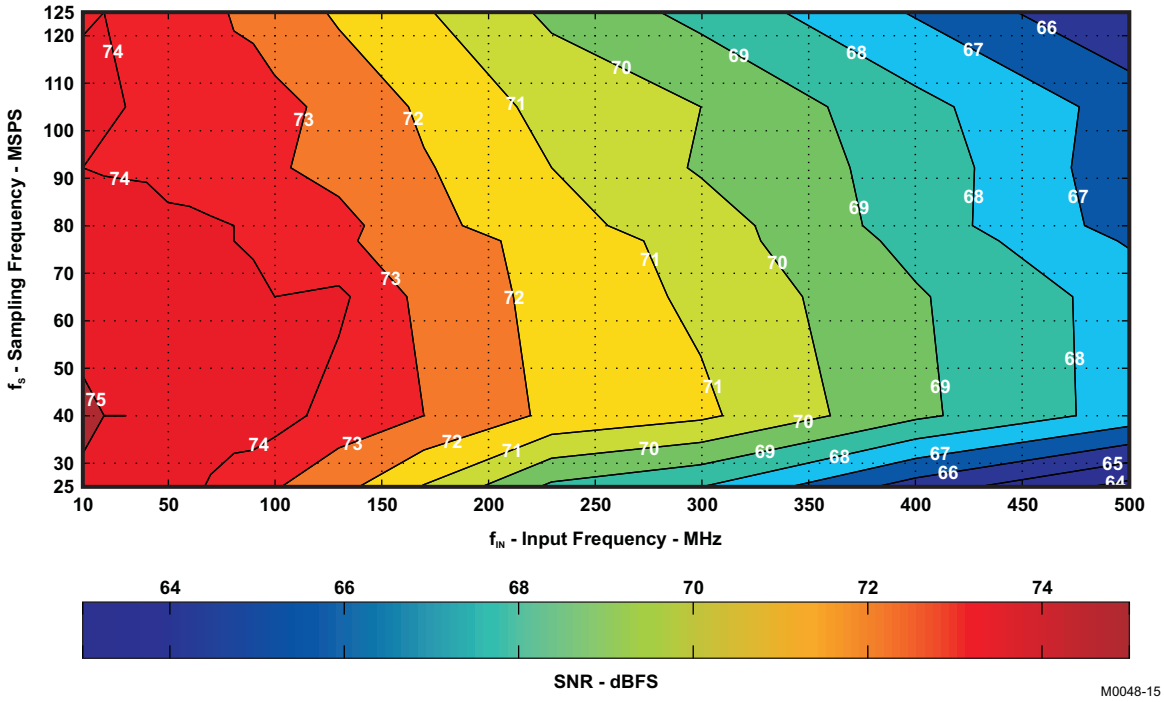

Figure 90. SNR Contour (no gain, F_S = 2 V_{PP})

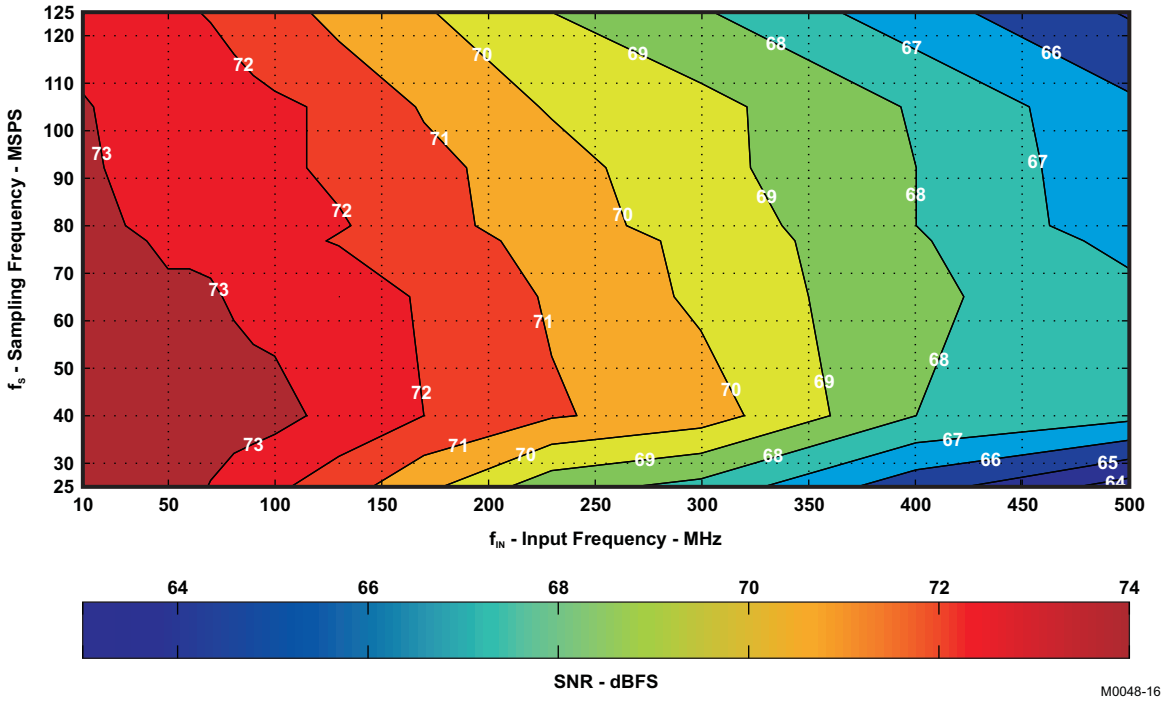

Figure 91. SNR Contour (with 3.5 dB coarse gain, F_S = 1.34 V_{PP})

Copyright © 2007–2008, Texas Instruments Incorporated

APPLICATION INFORMATION

THEORY OF OPERATION

The ADS614X devices are a family of low power, 14-bit pipeline ADCs in a CMOS process with up to a 125 MSPS sampling frequencies. These devices are based on switched capacitor technology and run off a single 3.3-V supply. The conversion process is initiated by the rising edge of the external input clock. Once the signal is captured by the input sample and hold, the input sample is sequentially converted by a series of lower resolution stages, with the outputs combined in a digital correction logic block. At every clock edge, the sample propagates through the pipeline resulting in a data latency of 9 clock cycles. The output is available as 14-bit data, in DDR LVDS or CMOS and coded in either straight offset binary or binary 2s complement format.

ANALOG INPUT

The analog input consists of a switched-capacitor based differential sample and hold architecture, shown in Figure 92.

This differential topology results in good ac-performance even for high input frequencies at high sampling rates. The INP and INM pins have to be externally biased around a common-mode voltage of 1.5 V available on the VCM pin. For a full-scale differential input, each input pin (INP, INM) has to swing symmetrically between VCM + 0.5 V and VCM – 0.5 V, resulting in a $2V_{PP}$ differential input swing. The maximum swing is determined by the internal reference voltages REFP (2.5 V nominal) and REFM (0.5 V, nominal).

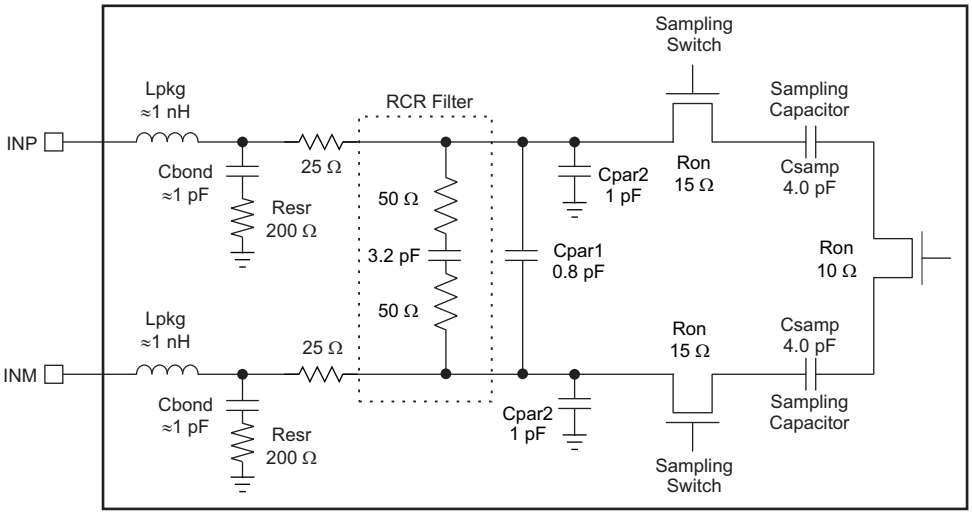

Figure 92. Input Stage

The input sampling circuit has a high 3dB bandwidth that extends up to 450 MHz (measured from the input pins to the voltage across the sampling capacitors).

Copyright © 2007–2008, Texas Instruments Incorporated

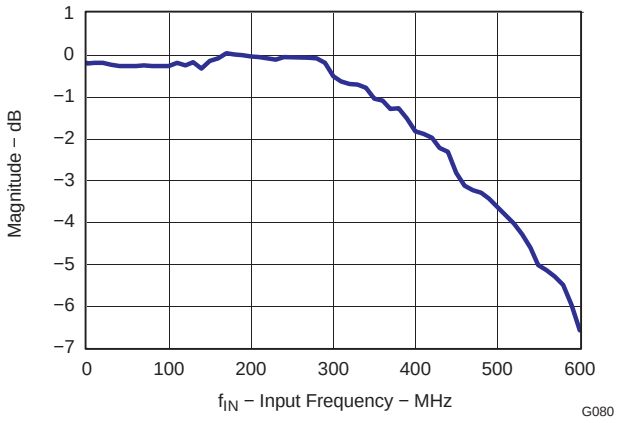

Figure 93. ADC Analog Input Bandwidth

Drive Circuit Requirements

For optimum performance, the analog inputs must be driven differentially. This improves the common-mode noise immunity and even-order harmonic rejection.

A 5-Ω resistor in series with each input pin is recommended to damp out ringing caused by the package parasitics. It is also necessary to present low impedance (< 50 Ω) for the common-mode switching currents. For example, this is achieved by using two resistors from each input terminated to the common-mode voltage (VCM).

In addition to the above, the drive circuit may have to be designed to provide a low insertion loss over the desired frequency range and matched impedance to the source. While doing this, the ADC input impedance (Zin) must be considered. Over a wide frequency range, the input impedance can be approximated by a parallel combination of Rin and Cin (Zin = Rin||Cin).

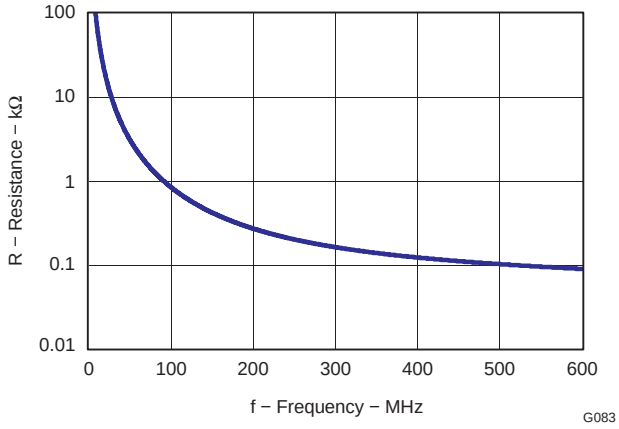

Figure 94. ADC Input Resistance, Rin

Copyright © 2007–2008, Texas Instruments Incorporated

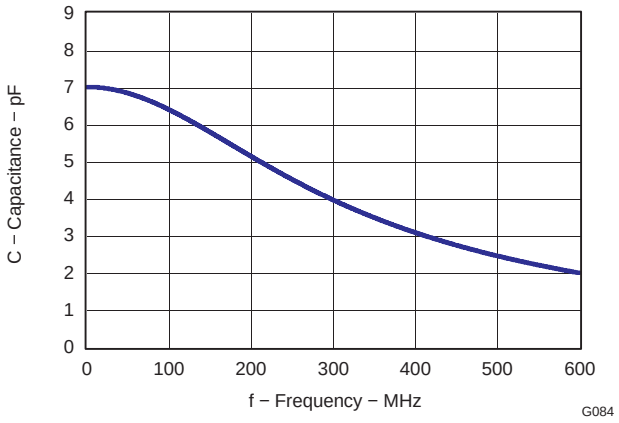

Figure 95. ADC Input Capacitance, Cin

Using RF-Transformer Based Drive Circuits

Figure 96 shows a configuration using a single 1:1 turn ratio transformer (for example, Coilcraft WBC1-1) that can be used for low input frequencies (about 100 MHz).

The single-ended signal is fed to the primary winding of the RF transformer. The transformer is terminated on the secondary side. Putting the termination on the secondary side helps to shield the kickbacks caused by the sampling circuit from the RF transformer's leakage inductances. The termination is accomplished by two resistors connected in series, with the center point connected to the 1.5 V common mode (VCM pin). The value of the termination resistors (connected to common mode) has to be low (< 100 Ω) to provide a low-impedance path for the ADC common-mode switching current.

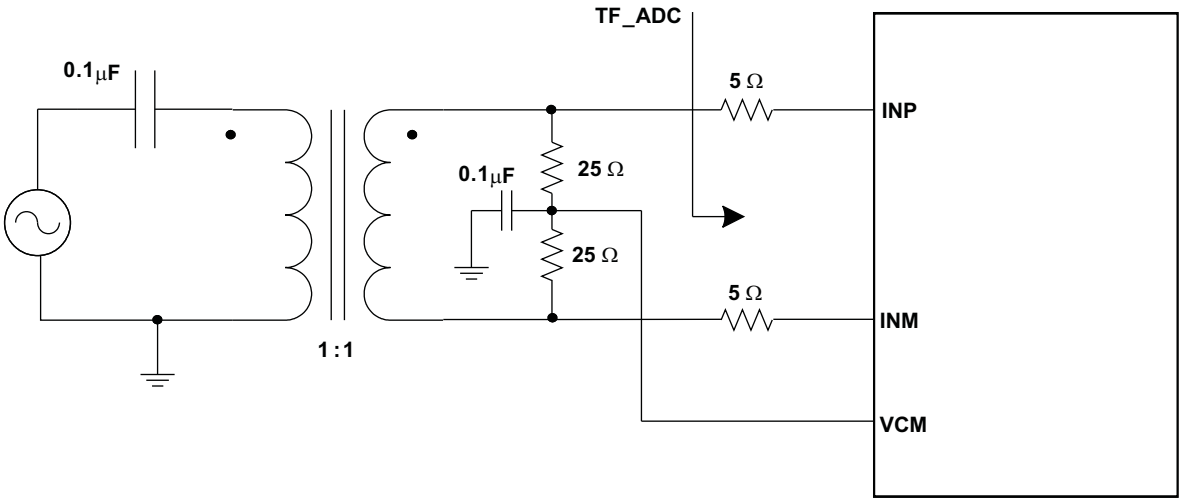

Figure 96. Single Transformer Drive Circuit

At high input frequencies, the mismatch in the transformer parasitic capacitance (between the windings) results in degraded even-order harmonic performance. Connecting two identical RF transformers back-to-back helps minimize this mismatch, and good performance is obtained for high frequency input signals. Figure 97 shows an example using two transformers (Coilcraft WBC1-1). An additional termination resistor pair (enclosed within the dotted box in Figure 97) may be required between the two transformers to improve the balance between the P and M sides. The center point of this termination must be connected to ground.

Copyright © 2007–2008, Texas Instruments Incorporated

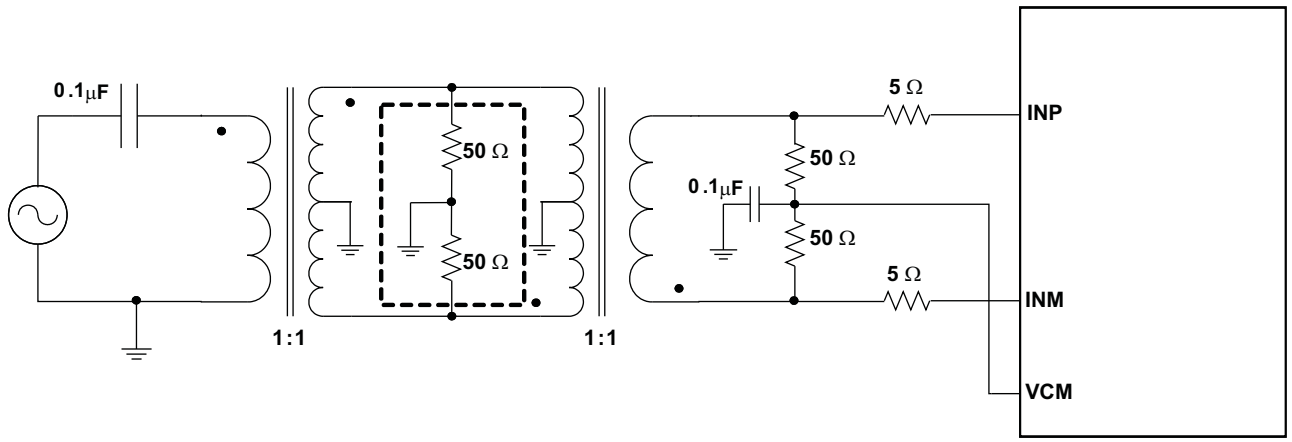

Figure 97. Two Transformer Drive Circuit

Using Differential Amplifier Drive Circuits

Figure 98 shows a drive circuit using a differential amplifier (TI's THS4509) to convert a single-ended input to a differential output that can be interfaced to the ADC analog input pins. In addition to the single-ended to differential conversion, the amplifier also provides gain (10 dB in Figure 98). R_{FIL} helps to isolate the amplifier outputs from the switching input of the ADC. Together with C_{FIL} it also forms a low-pass filter that band-limits the noise (and signal) at the ADC input. As the amplifier output is ac-coupled, the common-mode voltage of the ADC input pins is set using two 200-Ω resistors connected to VCM.

The amplifier output can also be dc-coupled. Using the output common-mode control of the THS4509, the ADC input pins can be biased to 1.5 V. In this case, use +4-V and –1-V supplies for the THS4509 so that its output common-mode voltage (1.5 V) is at mid-supply.

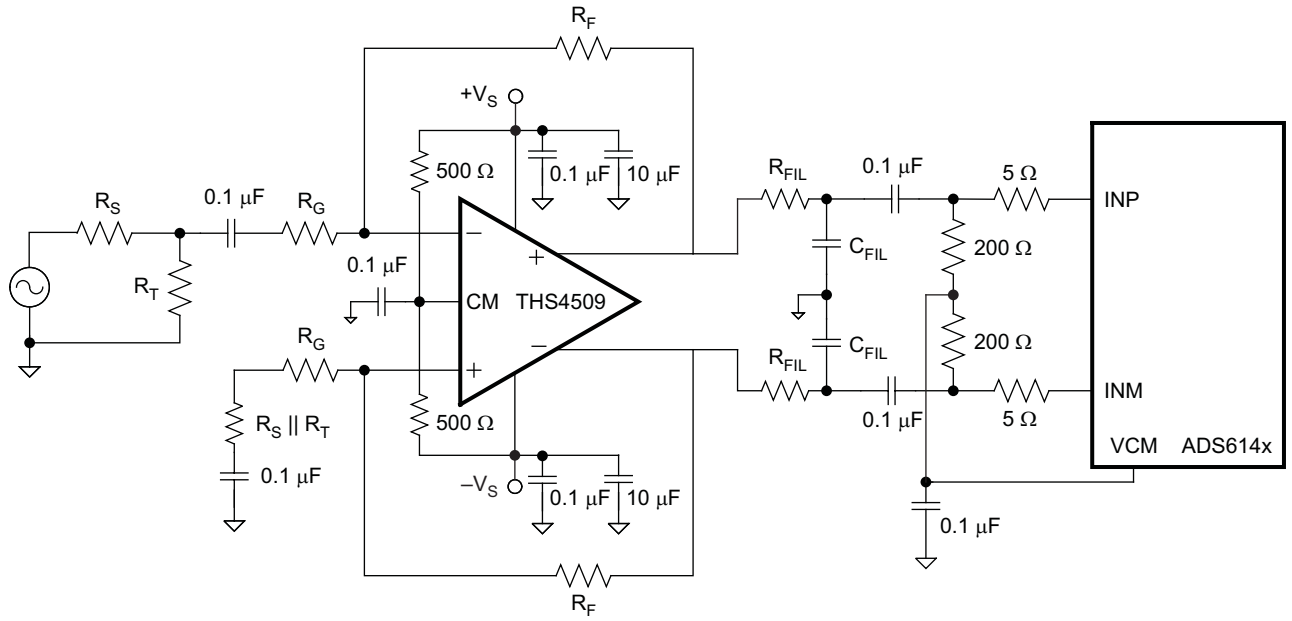

Figure 98. Drive Circuit Using the THS4509

See the EVM User Guide (SLWU028) for more information.

Copyright © 2007–2008, Texas Instruments Incorporated

Input Common Mode

To ensure a low-noise common-mode reference, the VCM pin is filtered with a 0.1-μF low-inductance capacitor connected to ground. The VCM pin is designed to directly drive the ADC inputs. The input stage of the ADC sinks a common-mode current in the order of 180 μA (at 125 MSPS). Equation 1 describes the dependency of the common-mode current and the sampling frequency.

$$180\ \mu A\ \times\ \frac{Fs}{125\ MSPS} \tag{1}$$

Equation 1 helps to design the output capability and impedance of the CM driving circuit.

REFERENCE

The ADS614X have built-in internal references REFP and REFM, requiring no external components. Design schemes are used to linearize the converter load seen by the references; this and the integration of the requisite reference capacitors on-chip eliminates the need for external decoupling. The full-scale input range of the converter is controlled in the external reference mode as explained below. The internal or external reference modes can be selected by programming the serial interface register bit **<REF>** (Table 5).

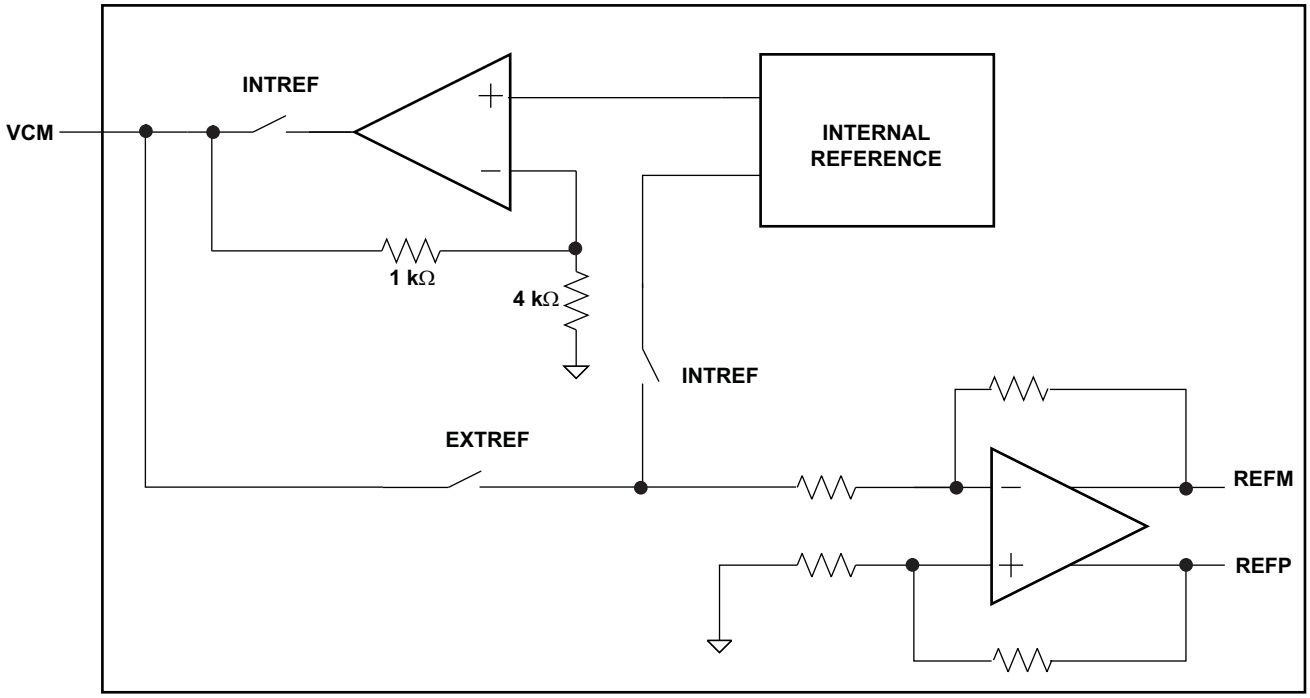

Figure 99. Reference Section

Internal Reference

When the device is in internal reference mode, the REFP and REFM voltages are generated internally. Common-mode voltage (1.5 V nominal) is output on the VCM pin, which can be used to externally bias the analog input pins.

External Reference

When the device is in external reference mode, VCM acts as a reference input pin. The voltage forced on the VCM pin is buffered and gained by 1.33 internally, generating the REFP and REFM voltages. The differential input voltage corresponding to full-scale is given by Equation 2.

$$\text{Full–scale differential input pp} = (\text{Voltage forced on VCM}) \times 1.33 \tag{2}$$

In this mode, the 1.5-V common-mode voltage to bias the input pins has to be generated externally. There is no change in performance compared to internal reference mode.

Copyright © 2007–2008, Texas Instruments Incorporated

COARSE GAIN AND PROGRAMMABLE FINE GAIN

The ADS614X include gain settings that can be used to improve SFDR performance (compared to 0 dB gain mode). The gain settings are 3.5 dB coarse gain and 0 dB to 6 dB programmable fine gain. For each gain setting, the analog input full-scale range scales proportionally, as shown in Table 13.

The coarse gain is a fixed setting of 3.5 dB and is designed to improve SFDR with little degradation in SNR (as shown in Figure 13 and Figure 14). The fine gain is programmable in 1 dB steps from 0 dB to 6 dB. With fine gain, SFDR improvement is also achieved, but at the expense of SNR (there is about 1 dB SNR degradation for every 1 dB of fine gain).

So, the fine gain can be used to trade-off between SFDR and SNR. The coarse gain makes it possible to get the best SFDR but without losing SNR significantly. At high input frequencies, the gains are especially useful as the SFDR improvement is significant with marginal degradation in SINAD. The gains can be programmed using the register bits **<COARSE GAIN>** (see Table 5) and **<FINE GAIN>** (see Table 10). Note that the default gain after reset is 0 dB.

Table 13. Full-Scale Range Across Gains

GAIN, dB	TYPE	FULL-SCALE RANGE, V_{PP}
0	Default after reset	2.00
3.5	Coarse setting (fixed)	1.34
1	Fine gain (programmable)	1.78
2		1.59
3		1.42
4		1.26
5		1.12
6		1.00

Copyright © 2007–2008, Texas Instruments Incorporated

CLOCK INPUT

The clock inputs of the ADS614X can be driven differentially (SINE, LVPECL, or LVDS) or single-ended (LVCMOS), with little or no difference in performance between configurations. The common-mode voltage of the clock inputs is set to VCM using internal 5-kΩ resistors as shown in Figure 100. This allows the use of transformer-coupled drive circuits for the sine wave clock, or ac-coupling for the LVPECL, LVDS clock sources (see Figure 102 and Figure 103).

For best performance, it is recommended to drive the clock inputs differentially, reducing susceptibility to common-mode noise. In this case, it is best to connect both clock inputs to the differential input clock signal with 0.1-µF capacitors, as shown in Figure 102. A single-ended CMOS clock can be ac-coupled to the CLKP input, with CLKM connected to ground with a 0.1-µF capacitor, as shown in Figure 103.

For high input frequency sampling, a clock source with very low jitter is recommended. Band-pass filtering of the clock source can help reduce the effect of jitter. There is no change in performance with a non-50% duty cycle clock input. Figure 24 shows the performance of the ADC versus clock duty cycle.

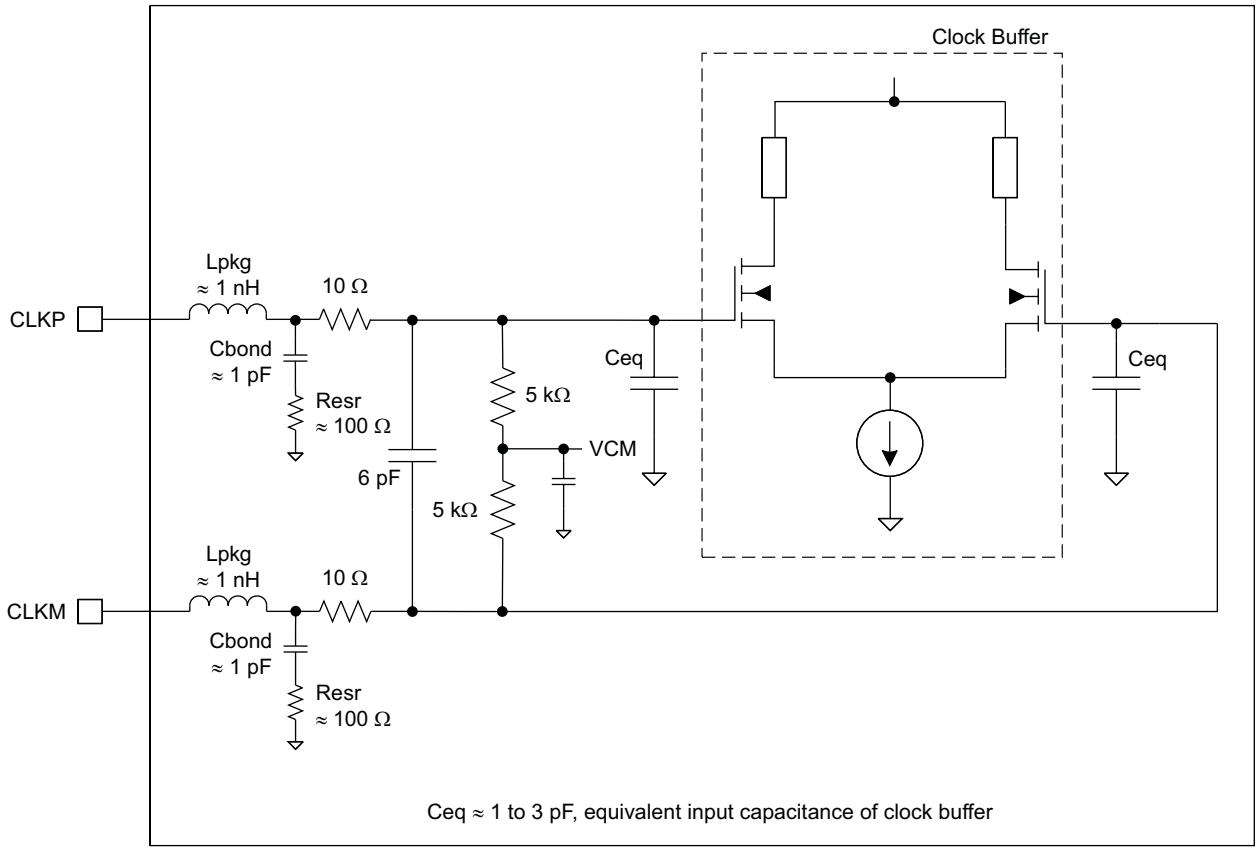

Figure 100. Internal Clock Buffer

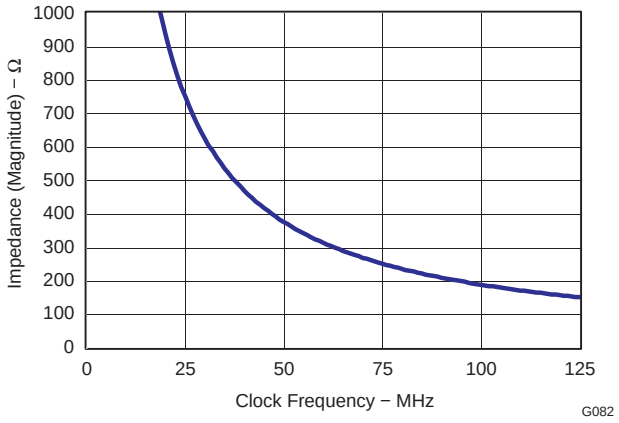

Figure 101. Clock Buffer Input Impedance

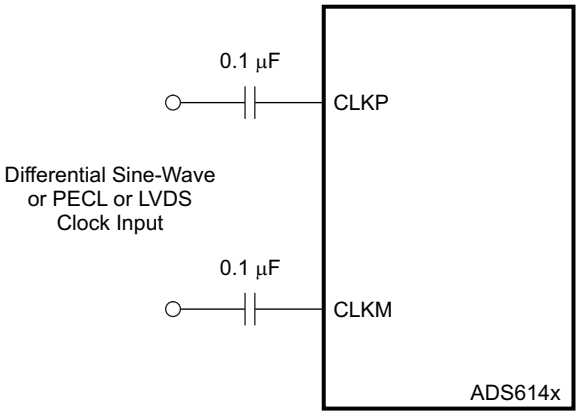

Figure 102. Differential Clock Driving Circuit

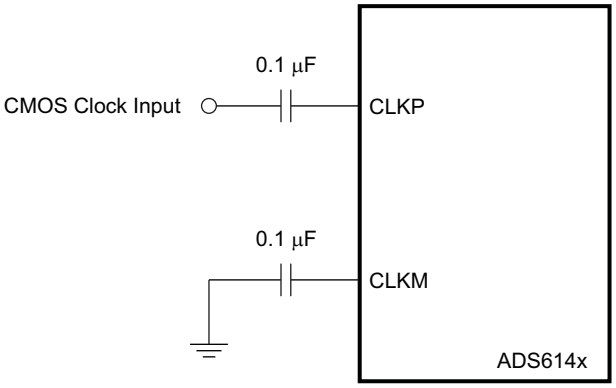

Figure 103. Single-Ended Clock Driving Circuit

Copyright © 2007–2008, Texas Instruments Incorporated

POWER-DOWN MODES

The ADS614X have four power-down modes – global power down, standby, output buffer disable, and input clock stopped. These modes can be set using the serial interface or using the parallel interface (pins SDATA and PDN).

Table 14. Power-Down Modes

POWER-DOWN MODES	PARALLEL INTERFACE		SERIAL INTERFACE REGISTER BIT (Table 5)	TOTAL POWER, mW	WAKE-UP TIME (to valid data)
	SDATA	PDN			
Normal operation	Low	Low	**<PDN OBUF>**=0 and **<STBY>**=0	417	-
Standby	Low	High	**<PDN OBUF>**=0 and **<STBY>**=1	72	Slow (15 µs)
Output buffer disable	High	Low	**<PDN OBUF>**=1 and **<STBY>**=0	408	Fast (200 ns)
Global power down	High	High	**<PDN OBUF>**=1 and **<STBY>**=1	30	Slow (15 µs)

Global Power Down

In this mode, the A/D converter, internal references, and the output buffers are powered down and the total power dissipation reduces to about 30 mW. The output buffers are in a high-impedance state. The wake-up time from the global power down to output data becoming valid in normal mode is a maximum of 50 µs. Note that after coming out of global power down, optimum performance is achieved after the internal reference voltages have stabilized (about 1 ms).

Standby

Only the A/D converter is powered down and total power dissipation is approximately 72 mW. The wake-up time from standby to output data becoming valid is a maximum of 50 µs.

Output Buffer Disable

The data output buffers can be disabled, reducing total power to about 408 mW. With the buffers disabled, the outputs are in a high-impedance state. The wake-up time from this mode to data becoming valid in normal mode is a maximum of 500 ns in LVDS mode and 200 ns in CMOS mode.

Input Clock Stop

The converter enters this mode when the input clock frequency falls below 1 MSPS. Power dissipation is approximately 120 mW, and the wake-up time from this mode to data becoming valid in normal mode is a maximum of 50 µs.

Power Supply Sequence

During power-up, the AVDD and DRVDD supplies can come up in any sequence. The two supplies are separated inside the device. Externally, they can be driven from separate supplies or from a single supply.

Copyright © 2007–2008, Texas Instruments Incorporated

DIGITAL OUTPUT INTERFACE

The ADS614X output 14 data bits together with an output clock. The output interface is either parallel CMOS or DDR LVDS voltage levels and can be selected using the serial register bit **<LVDS CMOS>** or parallel pin SEN.

Parallel CMOS Interface

In CMOS mode, the output buffer supply (DRVDD) can be operated over a wide range from 1.8 V to 3.3 V (typical). Each data bit is output on a separate pin as a CMOS voltage level, every clock cycle.

For DRVDD ≥ 2.2 V, it is recommended to use the CMOS output clock (CLKOUT) to latch data in the receiving chip. The rising edge of CLKOUT can be used to latch data in the receiver, even at the highest sampling speed (125 MSPS). It is recommended to minimize the load capacitance seen by the data and clock output pins by using short traces to the receiver. Also, match the output data and clock traces to minimize the skew between them.

For DRVDD < 2.2 V, it is recommended to use an external clock (for example, input clock delayed to get desired setup/hold times).

Output Clock Position Programmability

There is an option to shift (delay) the output clock position so that the setup time increases by 400 ps (typical, with respect to the default timings specified). This may be useful if the receiver needs more setup time, especially at high sampling frequencies. This can be programmed using the serial interface register bit **<CLKOUT_POSN>** (Table 6).

Output Buffer Strength Programmability

Switching noise (caused by CMOS output data transitions) can couple into the analog inputs during the instant of sampling and degrade the SNR. The coupling and SNR degradation increases as the output buffer drive is made stronger. To minimize this, the ADS614X CMOS output buffers are designed with a controlled drive strength for the best SNR. The default drive strength also ensures a wide data stable window for load capacitances up to 5 pF and a DRVDD supply voltage ≥ 2.2 V.

To ensure a wide data stable window for load capacitances > 5 pF, there is an option to increase the drive strength using the serial interface (**<DRIVE STRENGTH>**, see Table 12). Note that for a DRVDD supply voltage < 2.2 V, it is recommended to use the maximum drive strength (for any value of load capacitance).

CMOS Mode Power Dissipation

With CMOS outputs, the DRVDD current scales with the sampling frequency and the load capacitance on every output pin. The maximum DRVDD current occurs when each output bit toggles between 0 and 1 every clock cycle. In actual applications, this condition is unlikely to occur. The actual DRVDD current would be determined by the average number of output bits switching, which is a function of the sampling frequency and the nature of the analog input signal.

$$\text{Digital current due to CMOS output switching} = C_L \times \text{DRVDD} \times (N \times F_{AVG})$$

where C_L = load capacitance, $N \times F_{AVG}$ = average number of output bits switching

Figure 87 shows the current with various load capacitances across sampling frequencies with a 2-MHz analog input frequency.

Copyright © 2007–2008, Texas Instruments Incorporated

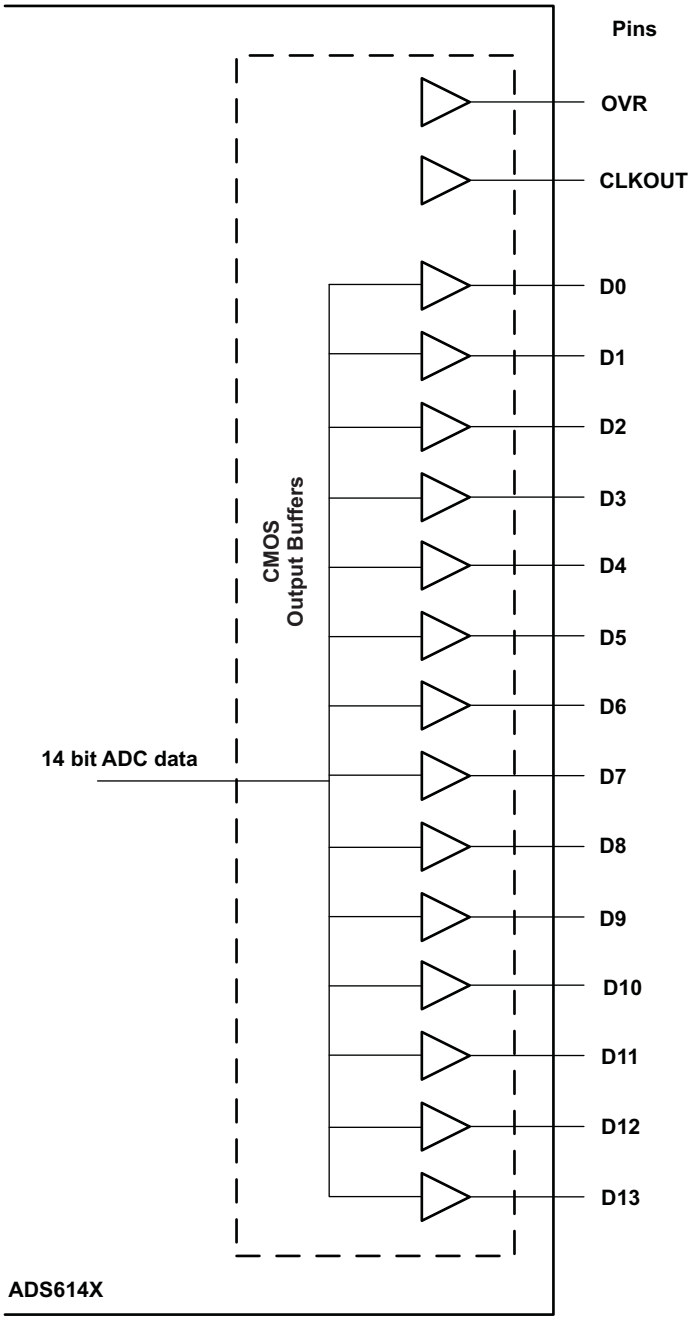

Figure 104. CMOS Output Buffers

DDR LVDS Interface

The LVDS interface works only with a 3.3-V DRVDD supply. In this mode, the 14 data bits and the output clock are available as LVDS (Low Voltage Differential Signal) levels. Two successive data bits are multiplexed and output on each LVDS differential pair every clock cycle (DDR - Double Data Rate, see Figure 105). So, there are 7 LVDS output pairs for the 14 data bits and 1 LVDS output pair for the output clock.

LVDS Buffer Current Programmability

The default LVDS buffer output current is 3.5 mA. When terminated by 100 Ω, this results in a 350-mV single-ended voltage swing (700-mV_{PP} differential swing). The LVDS buffer currents can also be programmed to 2.5 mA, 4.5 mA, and 1.75 mA (register bits **<LVDS CURRENT>**, see Table 11). In addition, there is a current double mode, where this current is doubled for the data and output clock buffers (register bits **<CURRENT DOUBLE>**, see Table 11).

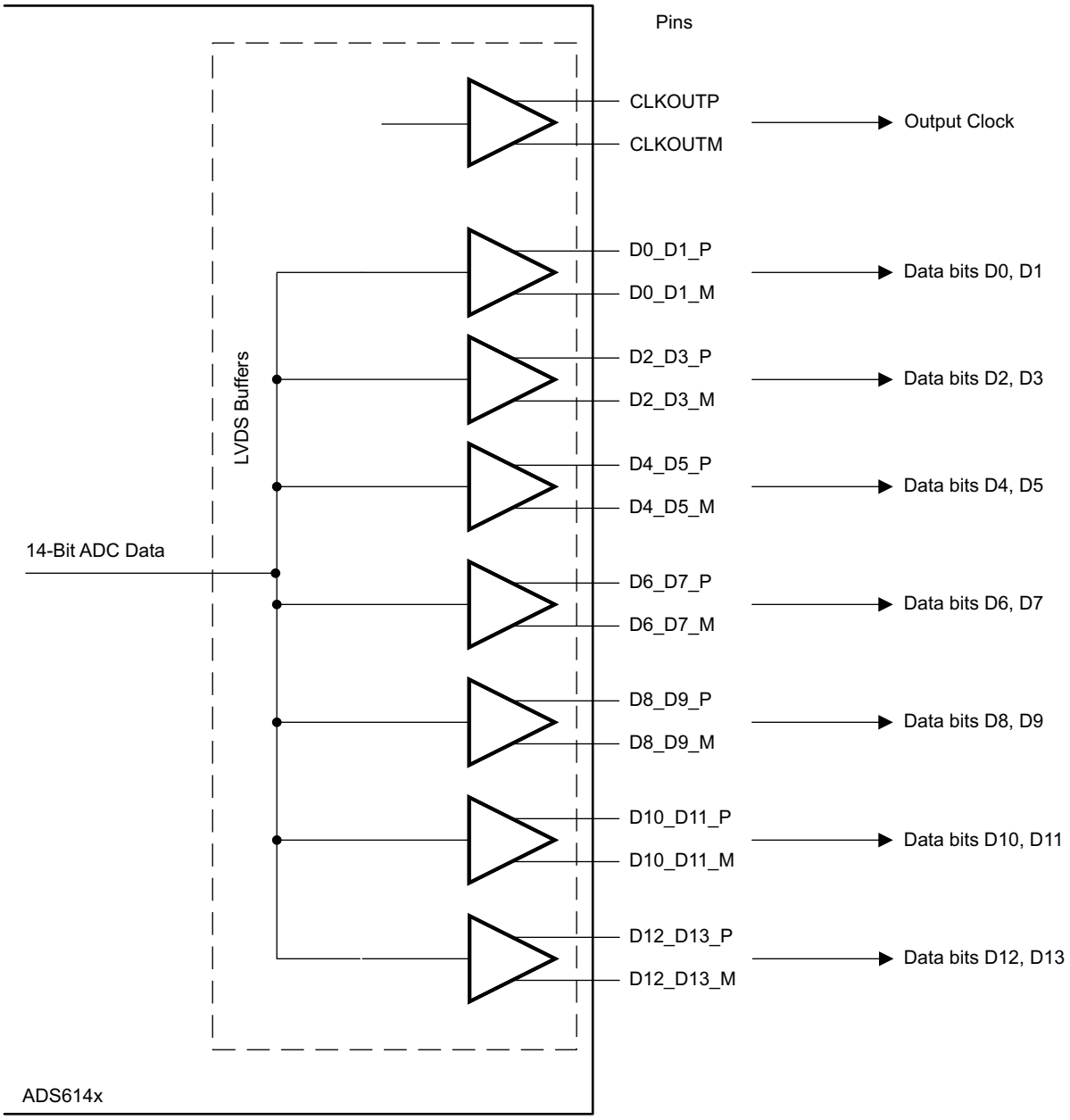

Figure 105. DDR LVDS Outputs

Copyright © 2007–2008, Texas Instruments Incorporated

Even data bits D0, D2, D4, D6, D8, D10, and D12 are output at the rising edge of CLKOUTP and the odd data bits D1, D3, D5, D7, D9, D11, and D13 are output at the falling edge of CLKOUTP. Both the rising and falling edges of CLKOUTP must be used to capture all 14 data bits (see Figure 106).

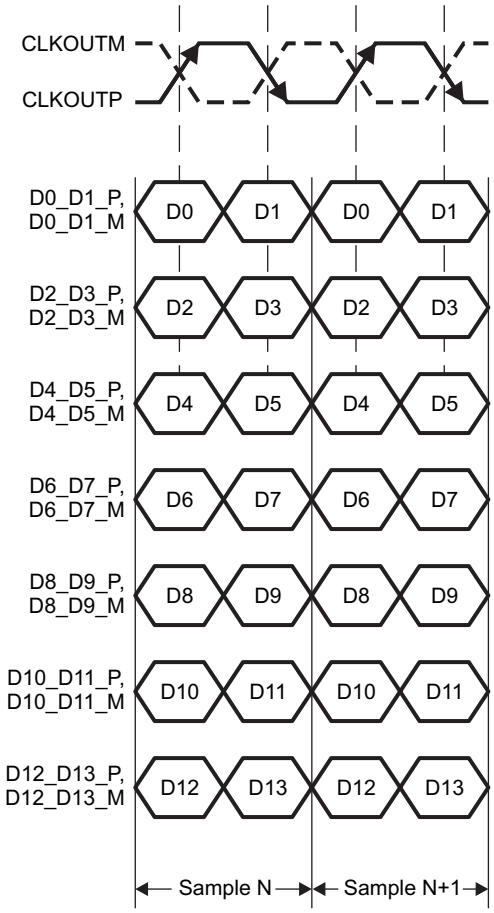

Figure 106. DDR LVDS Interface

LVDS Buffer Internal Termination

An internal termination option is available (using the serial interface), by which the LVDS buffers are differentially terminated inside the device. The termination resistances available are – 300 Ω, 185 Ω, and 150 Ω (nominal with ±20% variation). Any combination of these three terminations can be programmed; the effective termination is the parallel combination of the selected resistances. This results in eight effective terminations from open (no termination) to 65 Ω.

The internal termination helps to absorb any reflections coming from the receiver end, improving the signal integrity. With 100-Ω internal and 100-Ω external termination, the voltage swing at the receiver end is halved (compared to no internal termination). The voltage swing can be restored by using the LVDS current double mode. Figure 107 and Figure 108 compare the LVDS eye diagrams without and with internal termination (100 Ω). With internal termination, the eye looks clean even with 10-pF load capacitance (from each output pin to ground). The termination is programmed using register bits **<DATA TERM>** and **<CLKOUT TERM>** (see Table 11).

Copyright © 2007–2008, Texas Instruments Incorporated

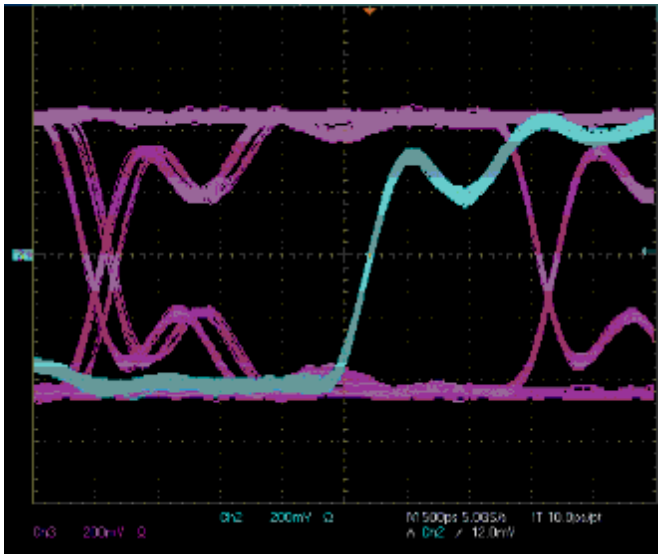

Figure 107. LVDS Eye Diagram - No Internal Termination
5-pF Load Capacitance
Blue Trace - Output Clock (CLKOUT)
Pink Trace - Output Data

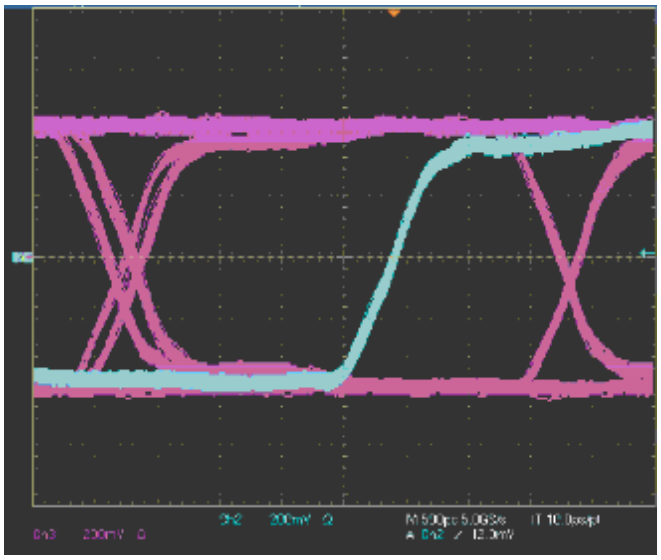

Figure 108. LVDS Eye Diagram with 100-Ω Internal Termination
10-pF Load Capacitance
Blue Trace - Output Clock (CLKOUT)
Pink Trace - Output Data

Output Data Format

Two output data formats are supported – 2s complement and offset binary. They can be selected using the parallel control pin SEN or the serial interface register bit **<DATA FORMAT>** (see Table 8).

Output Timings

The tables below show the timings at lower sampling frequencies.

Table 15. Timing Characteristics at Lower Sampling Frequencies (1)(2)

F_s, MSPS	t_{su} DATA SETUP TIME, ns			t_h DATA HOLD TIME, ns			t_{PDI} CLOCK PROPAGATION DELAY, ns		
	MIN	TYP	MAX	MIN	TYP	MAX	MIN	TYP	MAX
CMOS INTERFACE, DRVDD = 2.5 V to 3.3 V									
40	11.3	12.8		10	11.2		5	6.5	7.9
20	23	25		21	23				
10	48	50		46	48				
DDR LVDS INTERFACE, DRVDD = 3.3 V									
40	10.2	10.8		0.7	1.7		4.3	5.8	7.3
20	22	23		0.7	1.7		4.5	6.5	8.5
10	47	48		0.7	1.7		4.5	6.5	8.5

(1) Timing parameters are specified by design and characterization and not tested in production.
(2) Timings are specified with default output buffer drive strength and C_L= 5 pF.

Copyright © 2007–2008, Texas Instruments Incorporated

BOARD DESIGN CONSIDERATIONS

Grounding

A single ground plane is sufficient to give good performance, provided the analog, digital, and clock sections of the board are cleanly partitioned. See the EVM User Guide (SLWU028) for details on layout and grounding.

Supply Decoupling

As the ADS614X already include internal decoupling, minimal external decoupling can be used without loss in performance. Note that decoupling capacitors can help filter external power supply noise, so the optimum number of capacitors would depend on the actual application. The decoupling capacitors should be placed very close to the converter supply pins.

It is recommended to use separate supplies for the analog and digital supply pins to isolate digital switching noise from sensitive analog circuitry. In case only a single 3.3-V supply is available, it should be routed first to AVDD. It can then be tapped and isolated with a ferrite bead (or inductor) with decoupling capacitor, before being routed to DRVDD.

Exposed Thermal Pad

It is necessary to solder the exposed pad at the bottom of the package to a ground plane for best thermal performance. For detailed information, see application notes ***QFN Layout Guidelines*** (SLOA122) and ***QFN/SON PCB Attachment*** (SLUA271).

Copyright © 2007–2008, Texas Instruments Incorporated

DEFINITION OF SPECIFICATIONS

Analog Bandwidth

The analog input frequency at which the power of the fundamental is reduced by 3 dB with respect to the low frequency value.

Aperture Delay

The delay in time between the rising edge of the input sampling clock and the actual time at which the sampling occurs.

Aperture Uncertainty (Jitter)

The sample-to-sample variation in aperture delay.

Clock Pulse Width/Duty Cycle

The duty cycle of a clock signal is the ratio of the time the clock signal remains at a logic high (clock pulse width) to the period of the clock signal. Duty cycle is typically expressed as a percentage. A perfect differential sine-wave clock results in a 50% duty cycle.

Maximum Conversion Rate

The maximum sampling rate at which certified operation is given. All parametric testing is performed at this sampling rate unless otherwise noted.

Minimum Conversion Rate

The minimum sampling rate at which the ADC functions.

Differential Nonlinearity (DNL)

An ideal ADC exhibits code transitions at analog input values spaced exactly 1 LSB apart. The DNL is the deviation of any single step from this ideal value, measured in units of LSBs.

Integral Nonlinearity (INL)

The INL is the deviation of the ADC's transfer function from a best fit line determined by a least squares curve fit of that transfer function, measured in units of LSBs.

Gain Error

The gain error is the deviation of the ADC's actual input full-scale range from its ideal value. The gain error is given as a percentage of the ideal input full-scale range.

Offset Error

The offset error is the difference, given in number of LSBs, between the ADC's actual average idle channel output code and the ideal average idle channel output code. This quantity is often mapped into mV.

Temperature Drift

The temperature drift coefficient (with respect to gain error and offset error) specifies the change per degree Celsius of the parameter from T_{MIN} to T_{MAX}. It is calculated by dividing the maximum deviation of the parameter across the T_{MIN} to T_{MAX} range by the difference $T_{MAX}–T_{MIN}$.

Copyright © 2007–2008, Texas Instruments Incorporated

Signal-to-Noise Ratio

SNR is the ratio of the power of the fundamental (P_S) to the noise floor power (P_N), excluding the power at dc and the first nine harmonics.

$$SNR = 10Log^{10}\frac{P_S}{P_N} \quad (4)$$

SNR is either given in units of dBc (dB to carrier) when the absolute power of the fundamental is used as the reference, or dBFS (dB to full scale) when the power of the fundamental is extrapolated to the converter's full-scale range.

Signal-to-Noise and Distortion (SINAD)

SINAD is the ratio of the power of the fundamental (P_S) to the power of all the other spectral components including noise (P_N) and distortion (P_D), but excluding dc.

$$SINAD = 10Log^{10}\frac{P_S}{P_N + P_D} \quad (5)$$

SINAD is either given in units of dBc (dB to carrier) when the absolute power of the fundamental is used as the reference, or dBFS (dB to full scale) when the power of the fundamental is extrapolated to the converter's full-scale range.

Effective Number of Bits (ENOB)

The ENOB is a measure of a converter's performance as compared to the theoretical limit based on quantization noise.

$$ENOB = \frac{SINAD - 1.76}{6.02} \quad (6)$$

Total Harmonic Distortion (THD)

THD is the ratio of the power of the fundamental (P_S) to the power of the first nine harmonics (P_D).

$$THD = 10Log^{10}\frac{P_S}{P_N} \quad (7)$$

THD is typically given in units of dBc (dB to carrier).

Spurious-Free Dynamic Range (SFDR)

The ratio of the power of the fundamental to the highest other spectral component (either spur or harmonic). SFDR is typically given in units of dBc (dB to carrier).

Two-Tone Intermodulation Distortion

IMD3 is the ratio of the power of the fundamental (at frequencies f1 and f2) to the power of the worst spectral component at either frequency 2f1–f2 or 2f2–f1. IMD3 is either given in units of dBc (dB to carrier) when the absolute power of the fundamental is used as the reference, or dBFS (dB to full scale) when the power of the fundamental is extrapolated to the converter's full-scale range.

DC Power Supply Rejection Ratio (DC PSRR)

The DC PSSR is the ratio of the change in offset error to a change in analog supply voltage. The DC PSRR is typically given in units of mV/V.

Copyright © 2007–2008, Texas Instruments Incorporated

AC Power Supply Rejection Ratio (AC PSRR)

AC PSRR is the measure of rejection of variations in the supply voltage of the ADC. If ΔV_{SUP} is the change in the supply voltage and ΔV_{OUT} is the resultant change in the ADC output code (referred to the input), then

$$PSRR = 20Log^{10} \frac{\Delta V_{OUT}}{\Delta V_{SUP}} \text{ (Expressed in dBc)} \quad (8)$$

Common-Mode Rejection Ratio (CMRR)

CMRR is the measure of rejection of variations in the input common-mode voltage of the ADC. If ΔVcm is the change in the input common-mode voltage and ΔV_{OUT} is the resultant change in the ADC output code (referred to the input), then

$$CMRR = 20Log^{10} \frac{\Delta V_{OUT}}{\Delta V_{CM}} \text{ (Expressed in dBc)} \quad (9)$$

Voltage Overload Recovery

The number of clock cycles taken to recover to less than 1% error for a 6-dB overload on the analog inputs. A 6-dBFS sine wave at Nyquist frequency is used as the test stimulus.

Copyright © 2007–2008, Texas Instruments Incorporated

REVISION HISTORY

Changes from Revision A (October 2007) to Revision B **Page**

- Added maximum DRVDD current footnote 5
- Added SCLK and SEN pin function footnote 8
- Changed DDR LVDS output data sequence in Figure 1 11
- Changed pin configuration (CMOS mode) information 21
- Changed pin configuration (LVDS mode) information 23

Copyright © 2007–2008, Texas Instruments Incorporated

PACKAGING INFORMATION

Orderable part number	Status (1)	Material type (2)	Package | Pins	Package qty | Carrier	RoHS (3)	Lead finish/ Ball material (4)	MSL rating/ Peak reflow (5)	Op temp (°C)	Part marking (6)
ADS6142IRHBT	Active	Production	VQFN (RHB) | 32	250 | SMALL T&R	Yes	NIPDAUAG	Level-3-260C-168 HR	-40 to 85	AZ6142
ADS6142IRHBT.A	Active	Production	VQFN (RHB) | 32	250 | SMALL T&R	Yes	NIPDAUAG	Level-3-260C-168 HR	-40 to 85	AZ6142
ADS6143IRHBT	Active	Production	VQFN (RHB) | 32	250 | SMALL T&R	Yes	NIPDAU	Level-3-260C-168 HR	-40 to 85	AZ6143
ADS6143IRHBT.A	Active	Production	VQFN (RHB) | 32	250 | SMALL T&R	Yes	NIPDAU	Level-3-260C-168 HR	-40 to 85	AZ6143
ADS6144IRHBT	Active	Production	VQFN (RHB) | 32	250 | SMALL T&R	Yes	NIPDAU	Level-3-260C-168 HR	-40 to 85	AZ6144
ADS6144IRHBT.A	Active	Production	VQFN (RHB) | 32	250 | SMALL T&R	Yes	NIPDAU	Level-3-260C-168 HR	-40 to 85	AZ6144
ADS6145IRHBT	Active	Production	VQFN (RHB) | 32	250 | SMALL T&R	Yes	NIPDAUAG	Level-3-260C-168 HR	-40 to 85	AZ6145
ADS6145IRHBT.A	Active	Production	VQFN (RHB) | 32	250 | SMALL T&R	Yes	NIPDAUAG	Level-3-260C-168 HR	-40 to 85	AZ6145

(1) **Status:** For more details on status, see our product life cycle.

(2) **Material type:** When designated, preproduction parts are prototypes/experimental devices, and are not yet approved or released for full production. Testing and final process, including without limitation quality assurance, reliability performance testing, and/or process qualification, may not yet be complete, and this item is subject to further changes or possible discontinuation. If available for ordering, purchases will be subject to an additional waiver at checkout, and are intended for early internal evaluation purposes only. These items are sold without warranties of any kind.

(3) **RoHS values:** Yes, No, RoHS Exempt. See the TI RoHS Statement for additional information and value definition.

(4) **Lead finish/Ball material:** Parts may have multiple material finish options. Finish options are separated by a vertical ruled line. Lead finish/Ball material values may wrap to two lines if the finish value exceeds the maximum column width.

(5) **MSL rating/Peak reflow:** The moisture sensitivity level ratings and peak solder (reflow) temperatures. In the event that a part has multiple moisture sensitivity ratings, only the lowest level per JEDEC standards is shown. Refer to the shipping label for the actual reflow temperature that will be used to mount the part to the printed circuit board.

(6) **Part marking:** There may be an additional marking, which relates to the logo, the lot trace code information, or the environmental category of the part.

Multiple part markings will be inside parentheses. Only one part marking contained in parentheses and separated by a "~" will appear on a part. If a line is indented then it is a continuation of the previous line and the two combined represent the entire part marking for that device.

Important Information and Disclaimer: The information provided on this page represents TI's knowledge and belief as of the date that it is provided. TI bases its knowledge and belief on information provided by third parties, and makes no representation or warranty as to the accuracy of such information. Efforts are underway to better integrate information from third parties. TI has taken and continues to take reasonable steps to provide representative and accurate information but may not have conducted destructive testing or chemical analysis on incoming materials and chemicals. TI and TI suppliers consider certain information to be proprietary, and thus CAS numbers and other limited information may not be available for release.

In no event shall TI's liability arising out of such information exceed the total purchase price of the TI part(s) at issue in this document sold by TI to Customer on an annual basis.

TAPE AND REEL INFORMATION

REEL DIMENSIONS

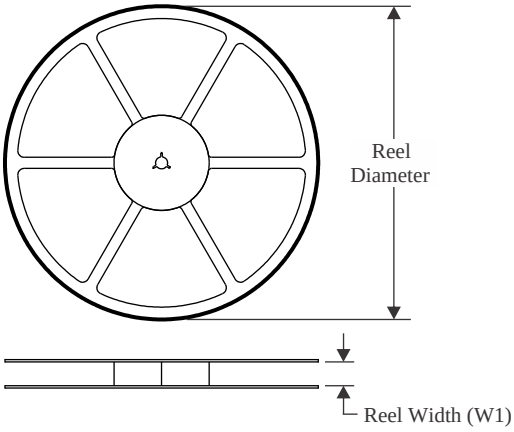

TAPE DIMENSIONS

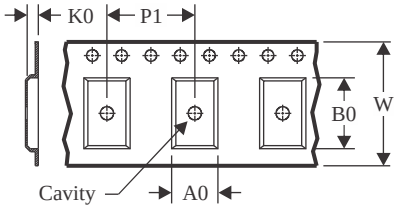

A0	Dimension designed to accommodate the component width
B0	Dimension designed to accommodate the component length
K0	Dimension designed to accommodate the component thickness
W	Overall width of the carrier tape
P1	Pitch between successive cavity centers

QUADRANT ASSIGNMENTS FOR PIN 1 ORIENTATION IN TAPE

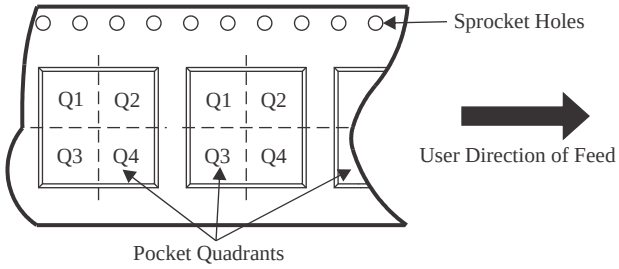

*All dimensions are nominal

Device	Package Type	Package Drawing	Pins	SPQ	Reel Diameter (mm)	Reel Width W1 (mm)	A0 (mm)	B0 (mm)	K0 (mm)	P1 (mm)	W (mm)	Pin1 Quadrant
ADS6142IRHBT	VQFN	RHB	32	250	180.0	12.4	5.3	5.3	1.5	8.0	12.0	Q2
ADS6143IRHBT	VQFN	RHB	32	250	180.0	12.4	5.3	5.3	1.5	8.0	12.0	Q2
ADS6144IRHBT	VQFN	RHB	32	250	180.0	12.4	5.3	5.3	1.5	8.0	12.0	Q2
ADS6145IRHBT	VQFN	RHB	32	250	180.0	12.4	5.3	5.3	1.5	8.0	12.0	Q2

TAPE AND REEL BOX DIMENSIONS

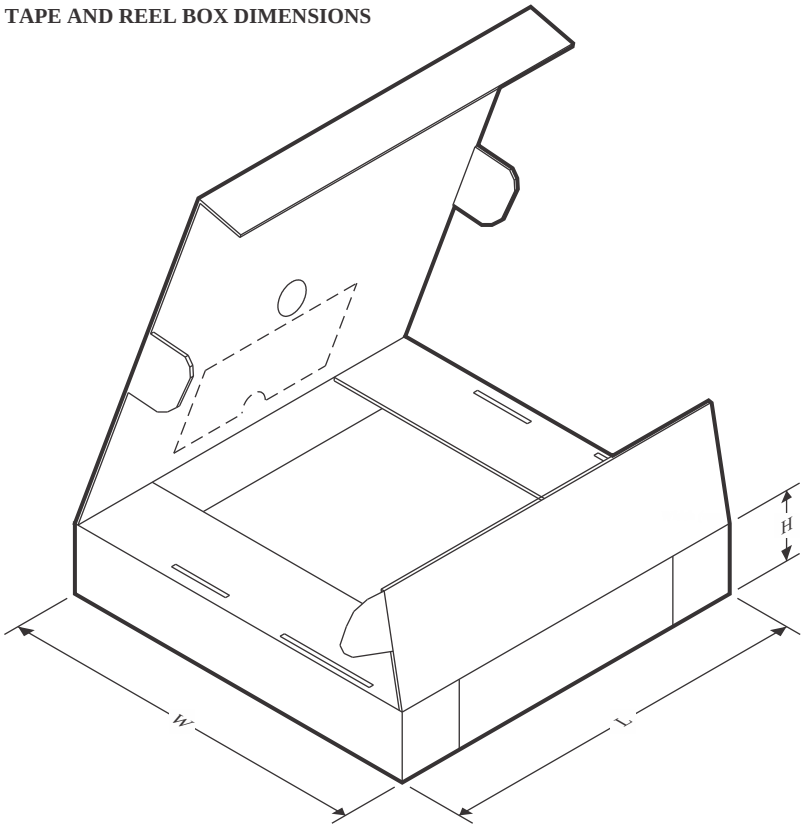

*All dimensions are nominal

Device	Package Type	Package Drawing	Pins	SPQ	Length (mm)	Width (mm)	Height (mm)
ADS6142IRHBT	VQFN	RHB	32	250	210.0	185.0	35.0
ADS6143IRHBT	VQFN	RHB	32	250	210.0	185.0	35.0
ADS6144IRHBT	VQFN	RHB	32	250	210.0	185.0	35.0
ADS6145IRHBT	VQFN	RHB	32	250	210.0	185.0	35.0

GENERIC PACKAGE VIEW

RHB 32

VQFN - 1 mm max height

5 x 5, 0.5 mm pitch

PLASTIC QUAD FLATPACK - NO LEAD

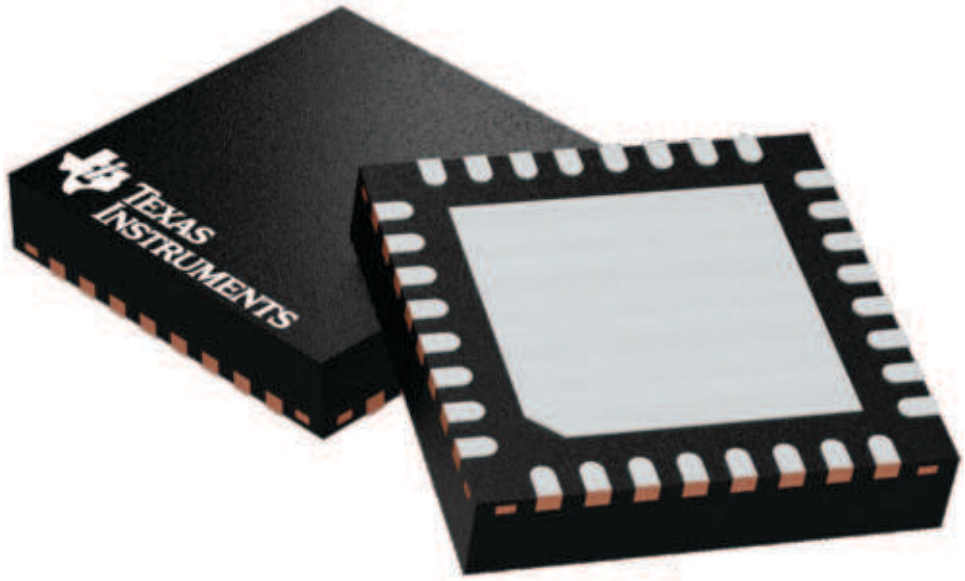

Images above are just a representation of the package family, actual package may vary.
Refer to the product data sheet for package details.

4224745/A

RHB0032E

PACKAGE OUTLINE

VQFN - 1 mm max height

PLASTIC QUAD FLATPACK - NO LEAD

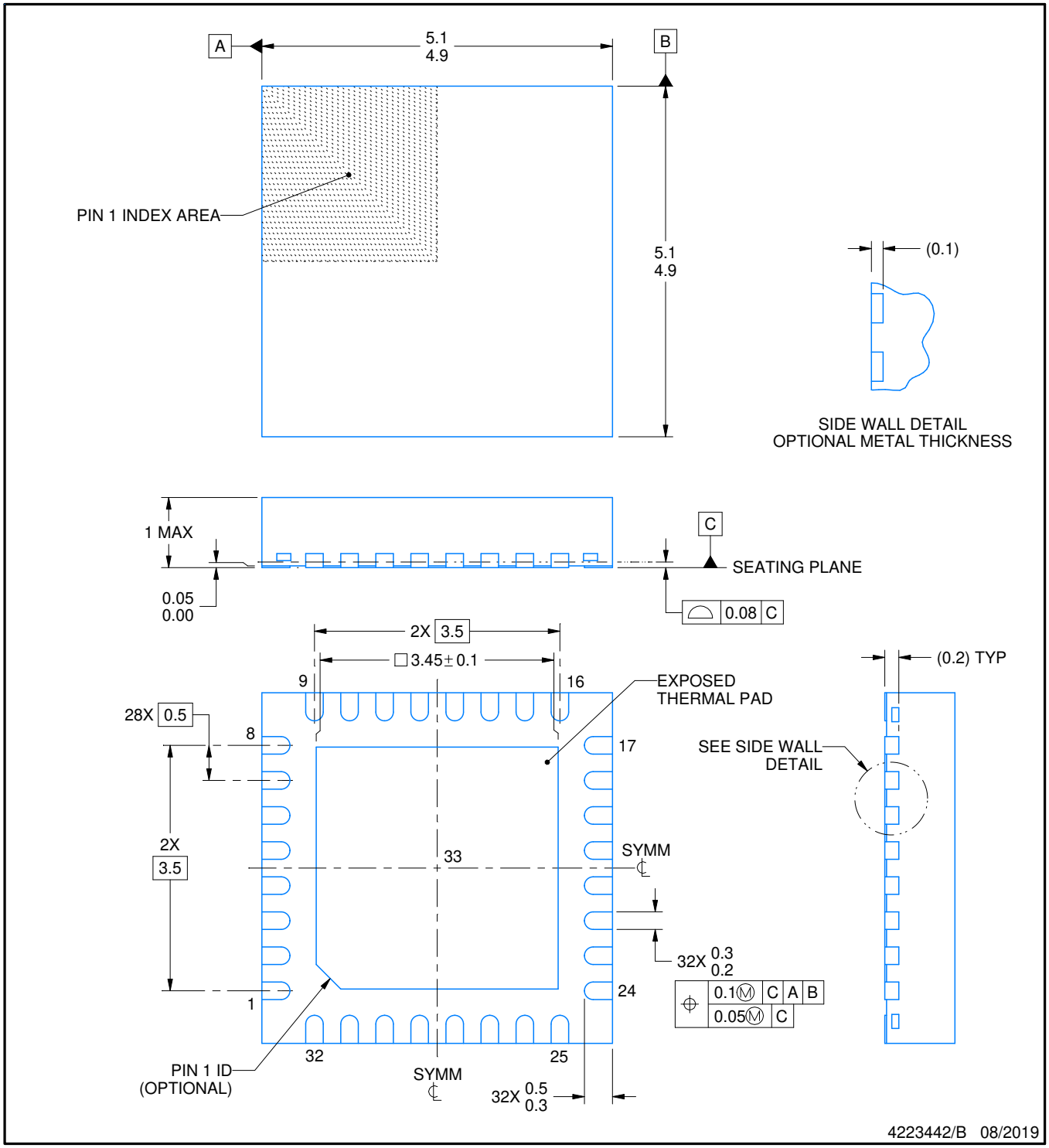

NOTES:

1. All linear dimensions are in millimeters. Any dimensions in parenthesis are for reference only. Dimensioning and tolerancing per ASME Y14.5M.
2. This drawing is subject to change without notice.
3. The package thermal pad must be soldered to the printed circuit board for thermal and mechanical performance.

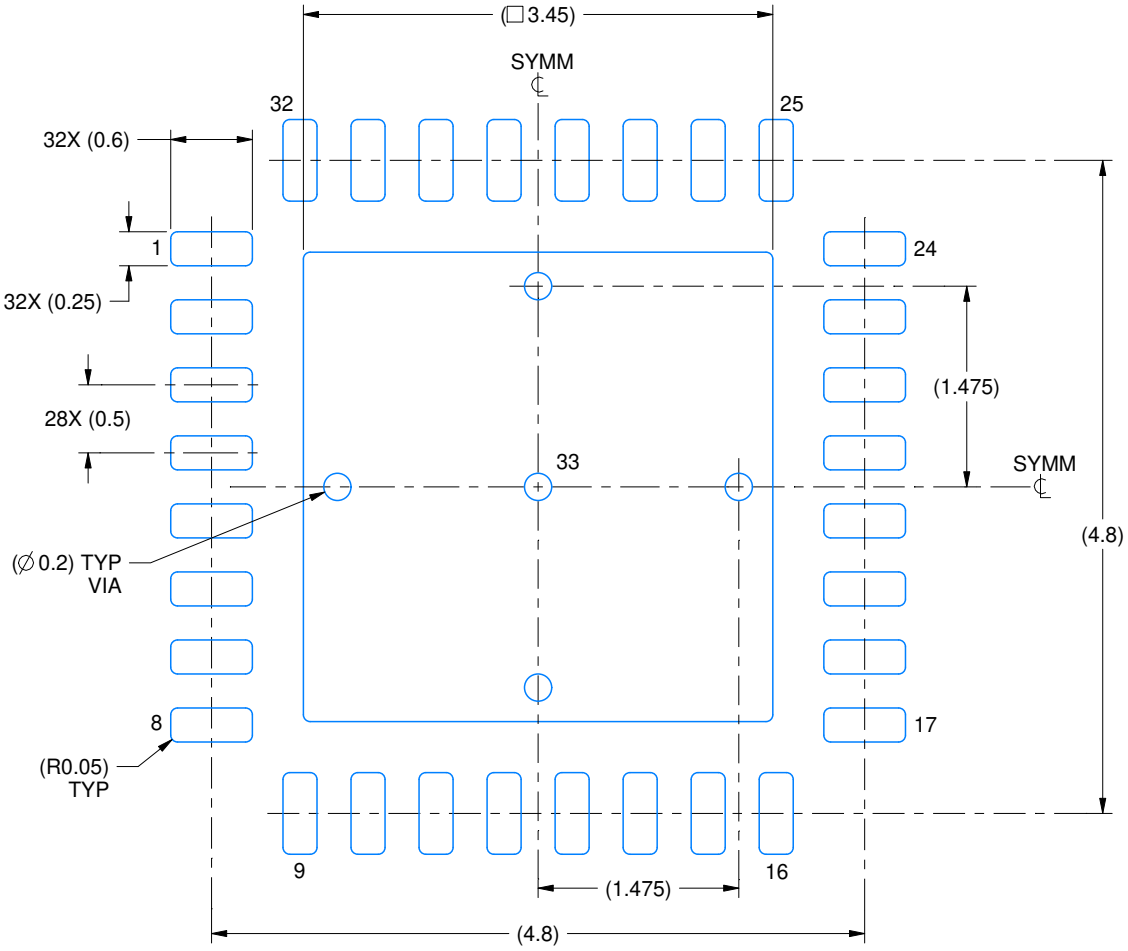

LAND PATTERN EXAMPLE
SCALE:18X

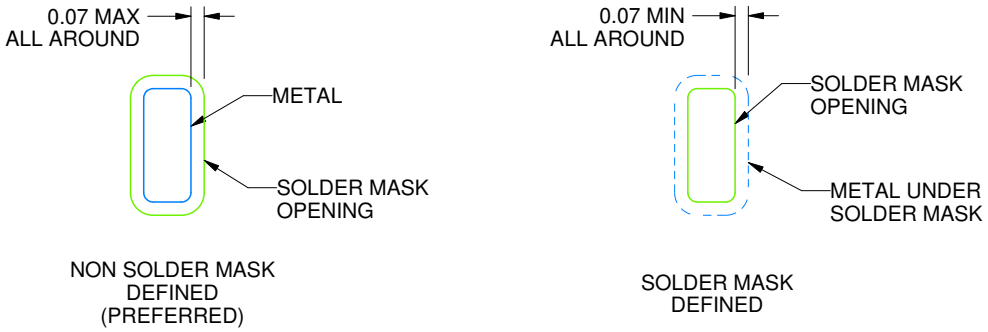

SOLDER MASK DETAILS

4223442/B 08/2019

NOTES: (continued)

4. This package is designed to be soldered to a thermal pad on the board. For more information, see Texas Instruments literature number SLUA271 (www.ti.com/lit/slua271).
5. Vias are optional depending on application, refer to device data sheet. If any vias are implemented, refer to their locations shown on this view. It is recommended that vias under paste be filled, plugged or tented.

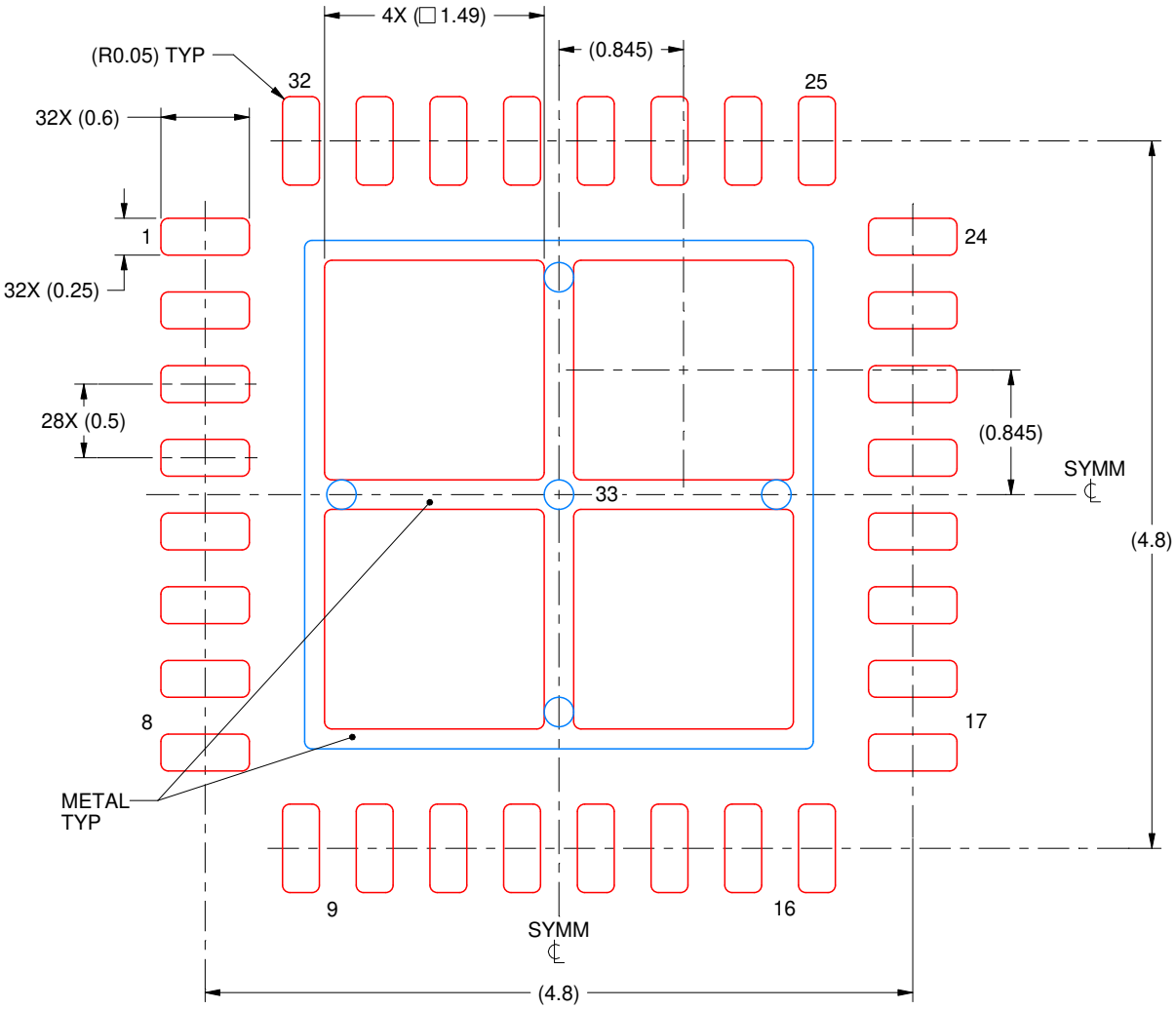

SOLDER PASTE EXAMPLE
BASED ON 0.125 mm THICK STENCIL

EXPOSED PAD 33:
75% PRINTED SOLDER COVERAGE BY AREA UNDER PACKAGE
SCALE:20X

4223442/B 08/2019

NOTES: (continued)

6. Laser cutting apertures with trapezoidal walls and rounded corners may offer better paste release. IPC-7525 may have alternate design recommendations.

IMPORTANT NOTICE AND DISCLAIMER

TI PROVIDES TECHNICAL AND RELIABILITY DATA (INCLUDING DATASHEETS), DESIGN RESOURCES (INCLUDING REFERENCE DESIGNS), APPLICATION OR OTHER DESIGN ADVICE, WEB TOOLS, SAFETY INFORMATION, AND OTHER RESOURCES “AS IS” AND WITH ALL FAULTS, AND DISCLAIMS ALL WARRANTIES, EXPRESS AND IMPLIED, INCLUDING WITHOUT LIMITATION ANY IMPLIED WARRANTIES OF MERCHANTABILITY, FITNESS FOR A PARTICULAR PURPOSE OR NON-INFRINGEMENT OF THIRD PARTY INTELLECTUAL PROPERTY RIGHTS.

These resources are intended for skilled developers designing with TI products. You are solely responsible for (1) selecting the appropriate TI products for your application, (2) designing, validating and testing your application, and (3) ensuring your application meets applicable standards, and any other safety, security, regulatory or other requirements.

These resources are subject to change without notice. TI grants you permission to use these resources only for development of an application that uses the TI products described in the resource. Other reproduction and display of these resources is prohibited. No license is granted to any other TI intellectual property right or to any third party intellectual property right. TI disclaims responsibility for, and you fully indemnify TI and its representatives against any claims, damages, costs, losses, and liabilities arising out of your use of these resources.

TI’s products are provided subject to TI’s Terms of Sale, TI’s General Quality Guidelines, or other applicable terms available either on ti.com or provided in conjunction with such TI products. TI’s provision of these resources does not expand or otherwise alter TI’s applicable warranties or warranty disclaimers for TI products. Unless TI explicitly designates a product as custom or customer-specified, TI products are standard, catalog, general purpose devices.

TI objects to and rejects any additional or different terms you may propose.

Copyright © 2026, Texas Instruments Incorporated

Last updated 10/2025