# AM26C31 Quadruple Differential Line Driver

## 1 Features

- Meets or exceeds the requirements of TIA/EIA-422-B and ITU recommendation V.11
- Low power, $I_{CC}$ = 100µA typical
- Operates from a single 5V supply
- High speed, $t_{PLH} = t_{PHL}$ = 7ns typical
- Low pulse distortion, $t_{sk(p)}$ = 0.5ns typical
- High output impedance in power-off conditions
- Improved replacement for AM26LS31 device
- Available in Q-temp automotive
  - High-reliability automotive applications
  - Configuration control and print support
  - Qualification to automotive standards
- On products compliant to MIL-PRF-38535, all parameters are tested unless otherwise noted. On all other products, production processing does not necessarily include testing of all parameters.

## 2 Applications

- Chemical and gas sensors
- Field transmitters: temperature sensors and pressure sensors
- Military: radars and sonars
- Motor control: brushless DC and brushed DC
- Military and avionics imaging
- Temperature sensors and controllers using modbus

## 3 Description

The AM26C31 device is a differential line driver with complementary outputs, designed to meet the requirements of TIA/EIA-422-B and ITU (formerly CCITT). The 3-state outputs have high-current capability for driving balanced lines, such as twisted-pair or parallel-wire transmission lines, and they provide the high-impedance state in the power-off condition. The enable functions are common to all four drivers and offer the choice of an active-high (G) or active-low ( $\overline{G}$) enable input. BiCMOS circuitry reduces power consumption without sacrificing speed.

The AM26C31C device is characterized for operation from 0°C to 70°C, the AM26C31I device is characterized for operation from –40°C to +85°C, the AM26C31Q device is characterized for operation over the automotive temperature range of –40°C to +125°C, and the AM26C31M device is characterized for operation over the full military temperature range of –55°C to +125°C.

**Package Information**

| PART NUMBER | PACKAGE(1) | PACKAGE SIZE(2) |
|---|---|---|
| AM26C31 | CDIP (J, 16) | 19.56mm × 6.92mm |
| | PDIP (N, 16) | 19.3mm × 6.35mm |
| | SO (NS, 16) | 10.3mm × 5.3mm |
| | CFP (W, 16) | 10.3mm × 6.73mm |
| | SOIC (D, 16) | 9.9mm × 3.91mm |
| | SSOP (DB, 16) | 6.2mm × 5.3mm |
| | TSSOP (PW, 16) | 5.mm × 4.4mm |
| | LCCC (FK, 20) | 8.89mm × 8.89mm |

(1) For more information, see Section 11.
(2) The package size (length × width) is a nominal value and includes pins, where applicable.

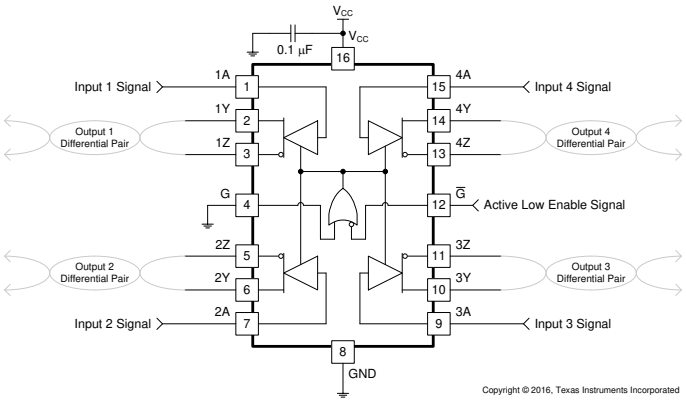


**Common Application Diagram**

An IMPORTANT NOTICE at the end of this data sheet addresses availability, warranty, changes, use in safety-critical applications, intellectual property matters and other important disclaimers. PRODUCTION DATA.

# Table of Contents

**1 Features**....1
**2 Applications**....1
**3 Description**....1
**4 Pin Configuration and Functions**....3
**5 Specifications**....4
5.1 Absolute Maximum Ratings....4
5.2 ESD Ratings....4
5.3 Recommended Operating Conditions....4
5.4 Thermal Information....5
5.5 Electrical Characteristics: AM26C31C and AM26C31I....5
5.6 Electrical Characteristics: AM26C31Q and AM26C31M....6
5.7 Switching Characteristics: AM26C31C and AM26C31I....6
5.8 Switching Characteristics: AM26C31Q and AM26C31M....7
5.9 Typical Characteristics....7
**6 Parameter Measurement Information**....8
**7 Detailed Description**....11
7.1 Overview....11
7.2 Functional Block Diagrams....11
7.3 Feature Description....12
7.4 Device Functional Modes....12
**8 Application Information Disclaimer**....13
8.1 Application Information....13
8.2 Typical Application....13
8.3 Power Supply Recommendations....14
8.4 Layout....14
**9 Device and Documentation Support**....16
9.1 Receiving Notification of Documentation Updates....16
9.2 Support Resources....16
9.3 Trademarks....16
9.4 Electrostatic Discharge Caution....16
9.5 Glossary....16
**10 Revision History**....16
**11 Mechanical, Packaging, and Orderable Information**....17


Copyright © 2024 Texas Instruments Incorporated

## 4 Pin Configuration and Functions

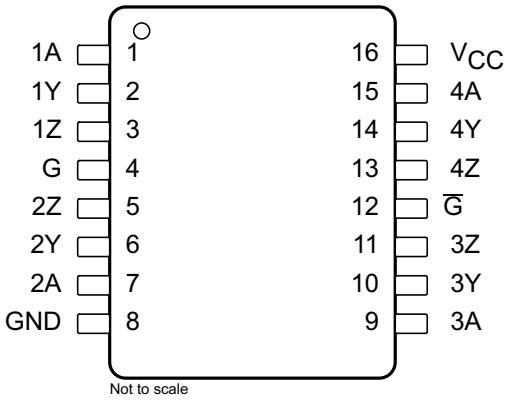


**Figure 4-1. J (CDIP), W (CFP), D (SOIC), DB (SSOP), NS (SO), N (PDIP), or PW (TSSOP) Package 16-Pin (Top View)**

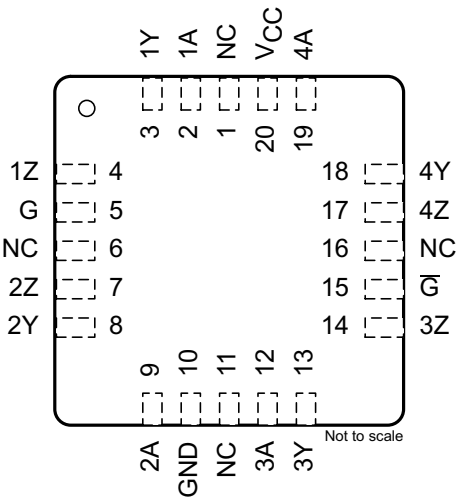


**Figure 4-2. FK (LCCC) Package, 20-Pin (Top View)**

**Table 4-1. Pin Functions**

| PIN | | | TYPE | DESCRIPTION |
|---|---|---|---|---|
| NAME | CDIP, CFP, SOIC, SSOP, SO, PDIP, TSSOP | LCCC | | |
| 1A | 1 | 2 | I | Driver 1 input |
| 1Y | 2 | 3 | O | Driver 1 output |
| 1Z | 3 | 4 | O | Driver 1 inverted output |
| 2A | 7 | 9 | I | Driver 2 input |
| 2Y | 6 | 8 | O | Driver 2 output |
| 2Z | 5 | 7 | O | Driver 2 inverted output |
| 3A | 9 | 12 | I | Driver 3 input |
| 3Y | 10 | 13 | O | Driver 3 output |
| 3Z | 11 | 14 | O | Driver 3 inverted output |
| 4A | 15 | 19 | I | Driver 3 input |
| 4Y | 14 | 18 | O | Driver 3 output |
| 4Z | 13 | 17 | O | Driver 3 inverted output |
| G | 4 | 5 | I | Active high enable |
| $\overline{G}$ | 12 | 15 | I | Active low enable |
| GND | 8 | 10 | — | Ground pin |
| NC[(1)] | — | 1, 6, 11, 16 | — | No internal connection |
| $V_{CC}$ | 16 | 20 | — | Power pin |

(1) NC – No connection

# 5 Specifications

## 5.1 Absolute Maximum Ratings

over operating free-air temperature range (unless otherwise noted)[1]

| | | MIN | MAX | UNIT |
|---|---|---|---|---|
| $V_{CC}$ | Supply voltage[2] | –0.5 | 7 | V |
| $V_I$ | Input voltage | –0.5 | $V_{CC}$ + 0.5 | V |
| $V_{ID}$ | Differential input voltage | –14 | 14 | V |
| $V_O$ | Output voltage | –0.5 | 7 | V |
| $I_{IK}$<br>$I_{OK}$ | Input or output clamp current | | ±20 | mA |
| $I_O$ | Output current | | ±150 | mA |
| | $V_{CC}$ current | | 200 | mA |
| | GND current | –200 | | mA |
| $T_J$ | Operating virtual junction temperature | | 150 | °C |
| $T_{stg}$ | Storage temperature | –65 | 150 | °C |

(1) Stresses beyond those listed under *Absolute Maximum Ratings* may cause permanent damage to the device. These are stress ratings only, and functional operation of the device at these or any other conditions beyond those indicated under *Recommended Operating Conditions* is not implied. Exposure to absolute-maximum-rated conditions for extended periods may affect device reliability.
(2) All voltage values, except differential voltages, are with respect to the network ground terminal.

## 5.2 ESD Ratings

| | | | VALUE | UNIT |
|---|---|---|---|---|
| $V_{(ESD)}$ | Electrostatic discharge | Human-body model (HBM), per ANSI/ESDA/JEDEC JS-001[1] | ±2000 | V |
| | | Charged-device model (CDM), per JEDEC specification JESD22-C101[2] | ±1000 | |

(1) JEDEC document JEP155 states that 500-V HBM allows safe manufacturing with a standard ESD control process.
(2) JEDEC document JEP157 states that 250-V CDM allows safe manufacturing with a standard ESD control process.

## 5.3 Recommended Operating Conditions

| | | | MIN | NOM | MAX | UNIT |
|---|---|---|---|---|---|---|
| $V_{CC}$ | Supply voltage | | 4.5 | 5 | 5.5 | V |
| $V_{ID}$ | Differential input voltage | | | ±7 | | V |
| $V_{IH}$ | High-level input voltage | | 2 | | | V |
| $V_{IL}$ | Low-level input voltage | | | | 0.8 | V |
| $I_{OH}$ | High-level output current | | | | –20 | mA |
| $I_{OL}$ | Low-level output current | | | | 20 | mA |
| $T_A$ | Operating free-air temperature | AM26C31C | 0 | | 70 | °C |
| | | AM26C31I | –40 | | 85 | |
| | | AM26C31Q | –40 | | 125 | |
| | | AM26C31M | –55 | | 125 | |


Copyright © 2024 Texas Instruments Incorporated

## 5.4 Thermal Information

| THERMAL METRIC[1] | | AM26C31 | | | | | | | | UNIT |
|---|---|---|---|---|---|---|---|---|---|---|
| | | D (SOIC) | DB (SSOP) | PW (TSSOP) | NS (SO) | N (PDIP) | J (CDIP) | W (CFP) | FK (LCCC) | |
| | | 16 PINS | 16 PINS | 16 PINS | 16 PINS | 16 PINS | 16 PINS | 16 PINS | 16 PINS | |
| $R_{\theta JA}$ | Junction-to-ambient thermal resistance[2] [3] | 84.6 | 102.6 | 107.5 | 88.5 | 60.6 | — | — | — | °C/W |
| $R_{\theta JC(top)}$ | Junction-to-case (top) thermal resistance | 43.5 | 48.7 | 38.4 | 46.2 | 48.1 | 39.3[4] | 58.9[4] | 37.1[4] | °C/W |
| $R_{\theta JB}$ | Junction-to-board thermal resistance | 43.2 | 54.3 | 53.7 | 50.7 | 40.6 | 56.4[4] | 109.3[4] | 36.2[4] | °C/W |
| $\psi_{JT}$ | Junction-to-top characterization parameter | 10.4 | 11.8 | 3.2 | 13.5 | 27.5 | — | — | — | °C/W |
| $\psi_{JB}$ | Junction-to-board characterization parameter | 42.8 | 53.5 | 53.1 | 50.3 | 40.3 | — | — | — | °C/W |
| $R_{\theta JC(bot)}$ | Junction-to-case (bottom) thermal resistance | n/a | n/a | n/a | n/a | n/a | 12[4] | 5.7[4] | 4.3[4] | °C/W |

(1) For more information about traditional and new thermal metrics, see the *Semiconductor and IC Package Thermal Metrics* application report.
(2) Maximum power dissipation is a function of $T_{J(max)}$, $R_{\theta JA}$, and $T_A$. The maximum allowable power dissipation at any allowable ambient temperature is $P_D = (T_{J(max)} – T_A) / R_{\theta JA}$. Operating at the absolute maximum $T_J$ of 150°C can affect reliability.
(3) The package thermal impedance is calculated in accordance with JESD 51-7.
(4) Modelling assumption: MIL-STD-883 for $R_{\theta JC(top)}$ and $R_{\theta JC(bot)}$ JESD51 for $R_{\theta JB}$.

## 5.5 Electrical Characteristics: AM26C31C and AM26C31I

over recommended ranges of supply voltage and operating free-air temperature (unless otherwise noted)

| PARAMETER | | TEST CONDITIONS | | MIN | TYP[1] | MAX | UNIT |
|---|---|---|---|---|---|---|---|
| $V_{OH}$ | High-level output voltage | $I_O$ = –20mA | | 2.4 | 3.4 | | V |
| $V_{OL}$ | Low-level output voltage | $I_O$ = 20mA | | | 0.2 | 0.4 | V |
| $V_{OD}$ | Differential output voltage magnitude | $R_L$ = 100Ω, see Figure 6-1 | | 2 | 3.1 | | V |
| $\Delta\|V_{OD}\|$ | Change in magnitude of differential output voltage[2] | $R_L$ = 100Ω, see Figure 6-1 | | | | ±0.4 | V |
| $V_{OC}$ | Common-mode output voltage | $R_L$ = 100Ω, see Figure 6-1 | | | | 3 | V |
| $\Delta\|V_{OC}\|$ | Change in magnitude of common-mode output voltage[2] | $R_L$ = 100Ω, see Figure 6-1 | | | | ±0.4 | V |
| $I_I$ | Input current | $V_I = V_{CC}$ or GND | | | | ±1 | µA |
| $I_{O(off)}$ | Driver output current with power off | $V_{CC}$ = 0 | $V_O$ = 6V | | | 100 | µA |
| | | | $V_O$ = –0.25V | | | –100 | |
| $I_{OS}$ | Driver output short-circuit current | $V_O$ = 0 | | –30 | | –150 | mA |
| $I_{OZ}$ | High-impedance off-state output current | $V_O$ = 2.5V | | | | 20 | µA |
| | | $V_O$ = 0.5V | | | | –20 | |
| $I_{CC}$ | Quiescent supply current | $I_O$ = 0 | $V_I$ = 0 or 5V | | | 100 | µA |
| | | | $V_I$ = 2.4V or 0.5V[3] | | 1.5 | 3 | mA |
| $C_i$ | Input capacitance | | | | 6 | | pF |

(1) All typical values are at $V_{CC}$ = 5V and $T_A$ = 25°C.
(2) $\Delta|V_{OD}|$ and $\Delta|V_{OC}|$ are the changes in magnitude of $V_{OD}$ and $V_{OC}$, respectively, that occur when the input is changed from a high level to a low level.
(3) This parameter is measured per input. All other inputs are at 0V or 5V.

Copyright © 2024 Texas Instruments Incorporated

## 5.6 Electrical Characteristics: AM26C31Q and AM26C31M

over recommended ranges of supply voltage and operating free-air temperature (unless otherwise noted)

| PARAMETER | | TEST CONDITIONS | | MIN | TYP[1] | MAX | UNIT |
|---|---|---|---|---|---|---|---|
| $V_{OH}$ | High-level output voltage | $I_O$ = –20mA | | 2.2 | 3.4 | | V |
| $V_{OL}$ | Low-level output voltage | $I_O$ = 20mA | | | 0.2 | 0.4 | V |
| $V_{OD}$ | Differential output voltage magnitude | $R_L$ = 100Ω, see Figure 6-1 | | 2 | 3.1 | | V |
| $\Delta\|V_{OD}\|$ | Change in magnitude of differential output voltage[2] | $R_L$ = 100Ω, see Figure 6-1 | | | | ±0.4 | V |
| $V_{OC}$ | Common-mode output voltage | $R_L$ = 100Ω, see Figure 6-1 | | | | 3 | V |
| $\Delta\|V_{OC}\|$ | Change in magnitude of common-mode output voltage[2] | $R_L$ = 100Ω, see Figure 6-1 | | | | ±0.4 | V |
| $I_I$ | Input current | $V_I = V_{CC}$ or GND | | | | ±1 | µA |
| $I_{O(off)}$ | Driver output current with power off | $V_{CC}$ = 0 | $V_O$ = 6V | | | 100 | µA |
| | | | $V_O$ = –0.25V | | | –100 | |
| $I_{OS}$ | Driver output short-circuit current | $V_O$ = 0 | | | | –170 | mA |
| $I_{OZ}$ | High-impedance off-state output current | $V_O$ = 2.5V | | | | 20 | µA |
| | | $V_O$ = 0.5V | | | | –20 | |
| $I_{CC}$ | Quiescent supply current | $I_O$ = 0 | $V_I$ = 0 or 5V | | | 100 | µA |
| | | | $V_I$ = 2.4V or 0.5V[3] | | | 3.2 | mA |
| $C_i$ | Input capacitance | | | | 6 | | pF |

(1) All typical values are at $V_{CC}$ = 5V and $T_A$ = 25°C.
(2) $\Delta|V_{OD}|$ and $\Delta|V_{OC}|$ are the changes in magnitude of $V_{OD}$ and $V_{OC}$, respectively, that occur when the input is changed from a high level to a low level.
(3) This parameter is measured per input. All other inputs are at 0V or 5V.

## 5.7 Switching Characteristics: AM26C31C and AM26C31I

over recommended ranges of supply voltage and operating free-air temperature (unless otherwise noted)

| PARAMETER | | TEST CONDITIONS | MIN | TYP[1] | MAX | UNIT |
|---|---|---|---|---|---|---|
| $t_{PLH}$ | Propagation delay time, low-to-high-level output | S1 is open, see Figure 6-2 | 3 | 7 | 12 | ns |
| $t_{PHL}$ | Propagation delay time, high-to-low-level output | | 3 | 7 | 12 | |
| $t_{sk(p)}$ | Pulse skew time ($\|t_{PLH} – t_{PHL}\|$) | S1 is open, see Figure 6-2 | | 0.5 | 4 | ns |
| $t_{r(OD)}$, $t_{f(OD)}$ | Differential output rise and fall times | S1 is open, see Figure 6-3 | | 5 | 10 | ns |
| $t_{PZH}$ | Output enable time to high level | S1 is closed, see Figure 6-4 | | 10 | 19 | ns |
| $t_{PZL}$ | Output enable time to low level | | | 10 | 19 | |
| $t_{PHZ}$ | Output disable time from high level | S1 is closed, see Figure 6-4 | | 7 | 16 | ns |
| $t_{PLZ}$ | Output disable time from low level | | | 7 | 16 | |
| $C_{pd}$ | Power dissipation capacitance (each driver)[2] | S1 is open, see Figure 6-2 | | 170 | | pF |

(1) All typical values are at $V_{CC}$ = 5V and $T_A$ = 25°C.
(2) $C_{pd}$ is used to estimate the switching losses according to $P_D = C_{pd} \times V_{CC}{}^2 \times f$, where f is the switching frequency.


Copyright © 2024 Texas Instruments Incorporated

## 5.8 Switching Characteristics: AM26C31Q and AM26C31M

over recommended ranges of supply voltage and operating free-air temperature (unless otherwise noted)

| PARAMETER | | TEST CONDITIONS | MIN | TYP[1] | MAX | UNIT |
|---|---|---|---|---|---|---|
| $t_{PLH}$ | Propagation delay time, low-to-high-level output | S1 is open, see Figure 6-2 | | 7 | 12 | ns |
| $t_{PHL}$ | Propagation delay time, high-to-low-level output | | | 6.5 | 12 | |
| $t_{sk(p)}$ | Pulse skew time ($\lvert t_{PLH} – t_{PHL} \rvert$) | S1 is open, see Figure 6-2 | | 0.5 | 4 | ns |
| $t_{r(OD)}$, $t_{f(OD)}$ | Differential output rise and fall times | S1 is open, see Figure 6-3 | | 5 | 12 | ns |
| $t_{PZH}$ | Output enable time to high level | S1 is closed, see Figure 6-4 | | 10 | 19 | ns |
| $t_{PZL}$ | Output enable time to low level | | | 10 | 19 | |
| $t_{PHZ}$ | Output disable time from high level | S1 is closed, see Figure 6-4 | | 7 | 16 | ns |
| $t_{PLZ}$ | Output disable time from low level | | | 7 | 16 | |
| $C_{pd}$ | Power dissipation capacitance (each driver)[2] | S1 is open, see Figure 6-2 | | 100 | | pF |

(1) All typical values are at $V_{CC}$ = 5V and $T_A$ = 25°C.
(2) $C_{pd}$ is used to estimate the switching losses according to $P_D = C_{pd} \times V_{CC}{}^2 \times f$, where f is the switching frequency.

## 5.9 Typical Characteristics

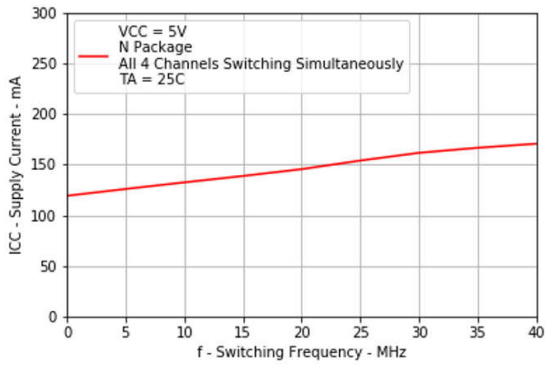


**Figure 5-1. Supply Current vs Switching Frequency**

## 6 Parameter Measurement Information

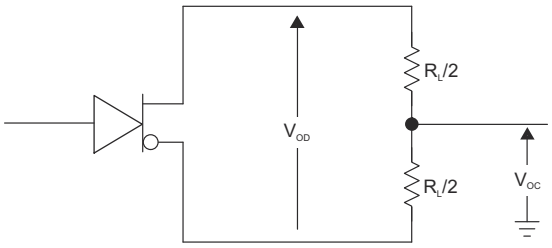


**Figure 6-1. Differential and Common-Mode Output Voltages**

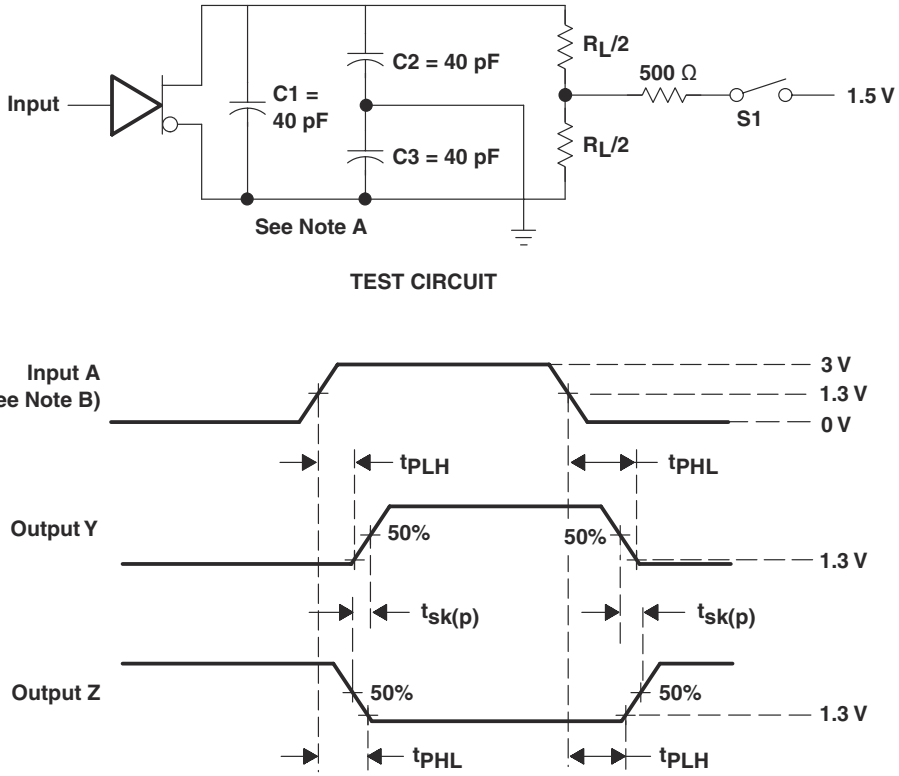


A. C1, C2, and C3 include probe and jig capacitance.

B. All input pulses are supplied by generators having the following characteristics: PRR ≤ 1MHz, duty cycle ≤ 50%, and $t_r$, $t_f$ ≤ 6ns.

**Figure 6-2. Propagation Delay Time and Skew Waveforms and Test Circuit**


Copyright © 2024 Texas Instruments Incorporated

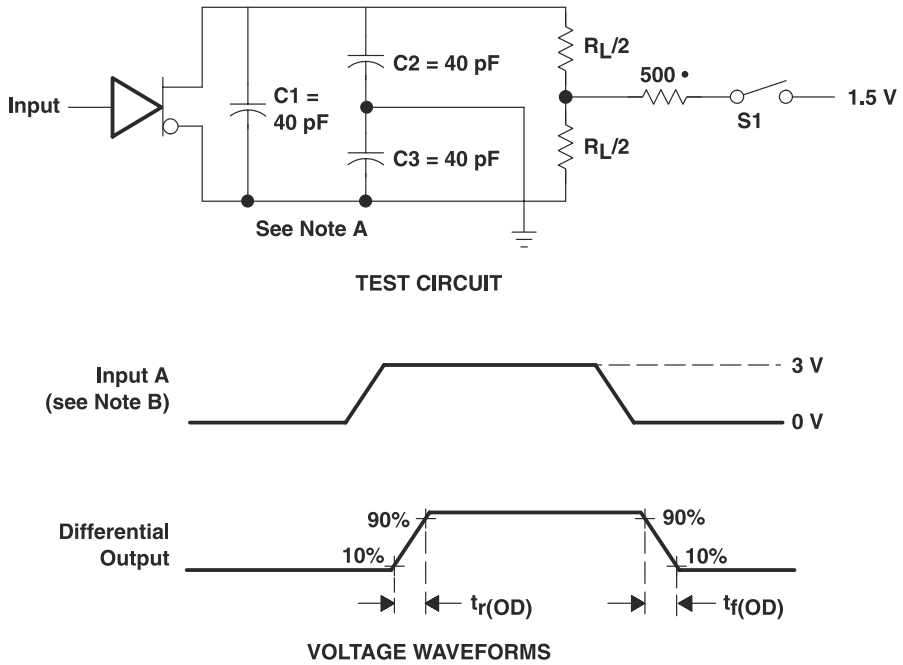


A. C1, C2, and C3 include probe and jig capacitance.

B. All input pulses are supplied by generators having the following characteristics: PRR ≤ 1MHz, duty cycle ≤ 50%, and $t_r$, $t_f$ ≤ 6ns.

**Figure 6-3. Differential-Output Rise and Fall-Time Waveforms and Test Circuit**

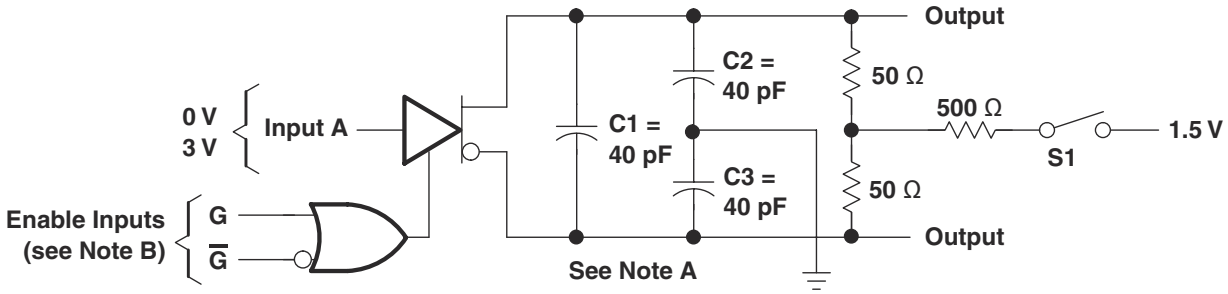


TEST CIRCUIT

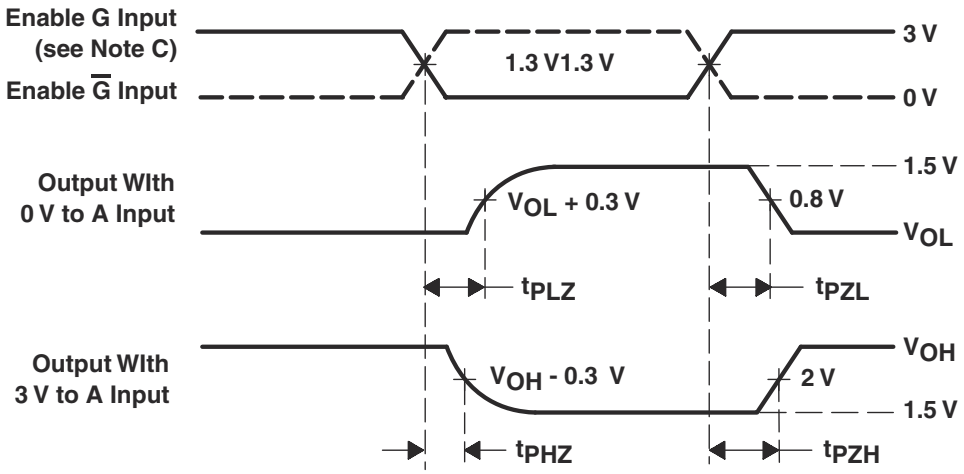


VOLTAGE WAVEFORMS

A. C1, C2, and C3 include probe and jig capacitance.
B. All input pulses are supplied by generators having the following characteristics: PRR ≤ 1MHz, duty cycle ≤ 50%, and $t_r$, $t_f$ ≤ 6ns.
C. Each enable is tested separately.

**Figure 6-4. Output Enable and Disable Time Waveforms and Test Circuit**


Copyright © 2024 Texas Instruments Incorporated

# 7 Detailed Description

## 7.1 Overview

The AM26C31 is a quadruple differential line driver with complementary outputs. The device is designed to meet the requirements of TIA/EIA-422-B and ITU (formerly CCITT), and it is generally used to communicate over relatively long wires in noisy environments.

## 7.2 Functional Block Diagrams

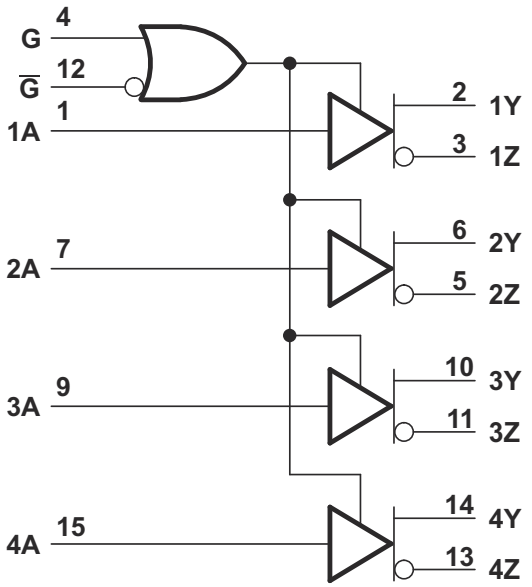


Copyright © 2016, Texas Instruments Incorporated

Pin numbers shown are for the D, DB, J, N, NS, PW, and W packages.

**Figure 7-1. Logic Diagram (Positive Logic)**

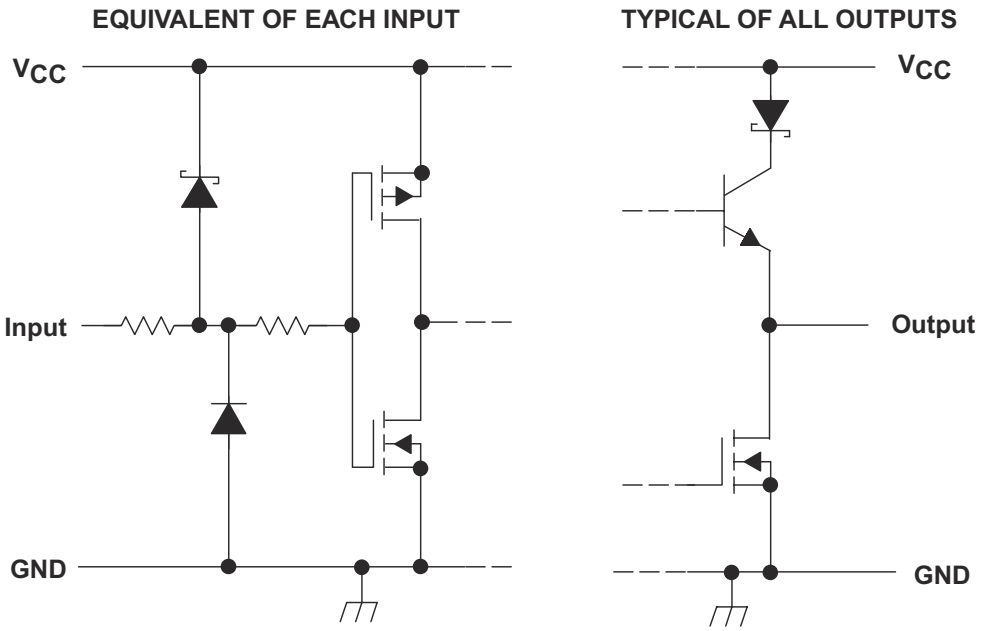


Copyright © 2016, Texas Instruments Incorporated

**Figure 7-2. Schematics of Inputs and Outputs**

## 7.3 Feature Description

### 7.3.1 Active-High and Active-Low

The device can be configured using the G and $\overline{G}$ logic inputs to select transmitter output. A logic high on the G pin or a logic low on the $\overline{G}$ pin enables the device to operate. These pins are simply a way to configure the logic to match that of the receiving or transmitting controller or microprocessor.

### 7.3.2 Operates From a Single 5V Supply

Both the logic and transmitters operate from a single 5V rail, making designs much more simple. The line drivers and receivers can operate off the same rail as the host controller or a similar low voltage supply, thus simplifying power structure.

## 7.4 Device Functional Modes

Table 7-1 lists the functional modes of the AM26C31.

**Table 7-1. Function Table (Each Driver)(1)**

| INPUT A | ENABLES | | OUTPUTS | |
|---|---|---|---|---|
| | G | $\overline{G}$ | Y | Z |
| H | H | X | H | L |
| L | H | X | L | H |
| H | X | L | H | L |
| L | X | L | L | H |
| X | L | H | Z | Z |

(1) H = High level,
L = Low level,
X = Irrelevant,
Z = High impedance (off)


Copyright © 2024 Texas Instruments Incorporated

# 8 Application Information Disclaimer

**Note**

Information in the following applications sections is not part of the TI component specification, and TI does not warrant its accuracy or completeness. TI's customers are responsible for determining suitability of components for their purposes, as well as validating and testing their design implementation to confirm system functionality.

## 8.1 Application Information

When designing a system that uses drivers, receivers, and transceivers that comply with RS-422, proper cable termination is essential for highly reliable applications with reduced reflections in the transmission line. Because RS-422 allows only one driver on the bus, if termination is used, it is placed only at the end of the cable near the last receiver. Factors to consider when determining the type of termination usually are performance requirements of the application and the ever-present factor, cost. The different types of termination techniques discussed are unterminated lines, parallel termination, AC termination, and multipoint termination. For laboratory experiments, 100 feet of 100Ω, 24-AWG, twisted-pair cable (Bertek) was used. A single driver and receiver, TI AM26C31C and AM26C32C, respectively, were tested at room temperature with a 5V supply voltage. To show voltage waveforms related to transmission-line reflections, the first plot shows output waveforms from the driver at the start of the cable (A/B); the second plot shows input waveforms to the receiver at the far end of the cable (Y).

## 8.2 Typical Application

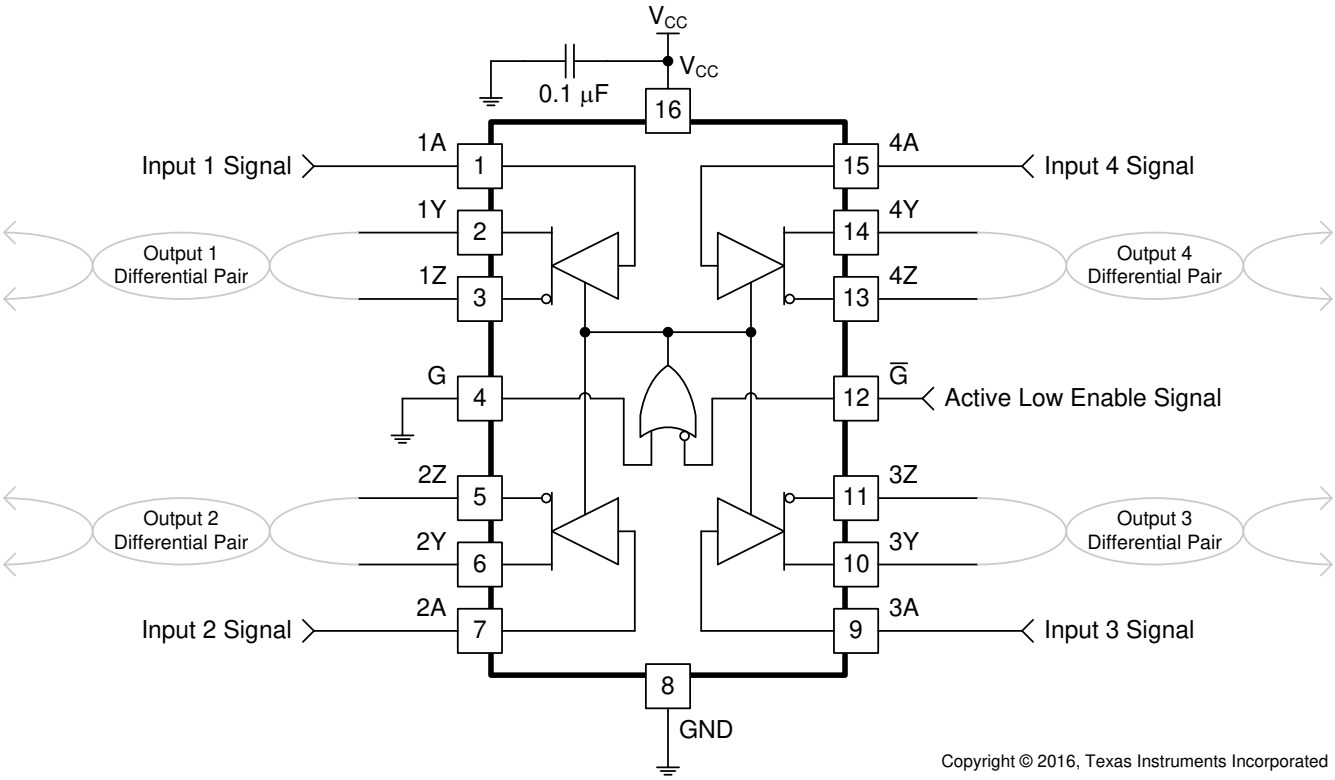


**Figure 8-1. Differential Terminated Configuration With All Channels and Active Low Enable Used**

### 8.2.1 Design Requirements

Resistor and capacitor (if used) termination values are shown for each laboratory experiment, but vary from system to system. For example, the termination resistor, $R_T$, must be within 20% of the characteristic impedance, Zo, of the cable and can vary from about 80Ω to 120Ω.

### 8.2.2 Detailed Design Procedure

Ensure values in *Absolute Maximum Ratings* are not exceeded.

Supply voltage, $V_{IH}$, and $V_{IL}$ must comply with *Recommended Operating Conditions*.

### 8.2.3 Application Curve

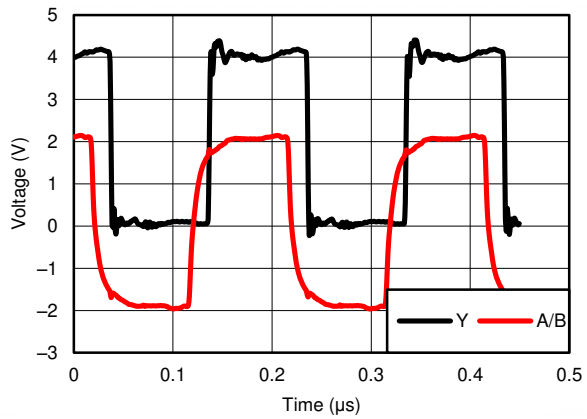


**Figure 8-2. Differential 120Ω Terminated Output Waveforms (Cat 5E Cable)**

## 8.3 Power Supply Recommendations

Place 0.1µF bypass capacitors close to the power-supply pins to reduce errors coupling in from noisy or high impedance power supplies.

## 8.4 Layout

### 8.4.1 Layout Guidelines

For best operational performance of the device, use good PCB layout practices, including:

- Noise can propagate into analog circuitry through the power pins of the circuit as a whole, as well as the operational amplifier. Bypass capacitors are used to reduce the coupled noise by providing low impedance power sources local to the analog circuitry.
  - Connect low-ESR, 0.1-µF ceramic bypass capacitors between each supply pin and ground, placed as close to the device as possible. A single bypass capacitor from V+ to ground is applicable for single-supply applications.
- Separate grounding for analog and digital portions of circuitry is one of the simplest and most effective methods of noise suppression. One or more layers on multilayer PCBs are usually devoted to ground planes. A ground plane helps distribute heat and reduces EMI noise pickup. Make sure to physically separate digital and analog grounds, paying attention to the flow of the ground current.
- To reduce parasitic coupling, run the input traces as far away from the supply or output traces as possible. If it is not possible to keep them separate, it is much better to cross the sensitive trace perpendicular as opposed to in parallel with the noisy trace.
- Place the external components as close to the device as possible. Keeping RF and RG close to the inverting input minimizes parasitic capacitance.
- Keep the length of input traces as short as possible. Always remember that the input traces are the most sensitive part of the circuit.
- Consider a driven, low-impedance guard ring around the critical traces. A guard ring can significantly reduce leakage currents from nearby traces that are at different potentials.


Copyright © 2024 Texas Instruments Incorporated

### 8.4.2 Layout Example

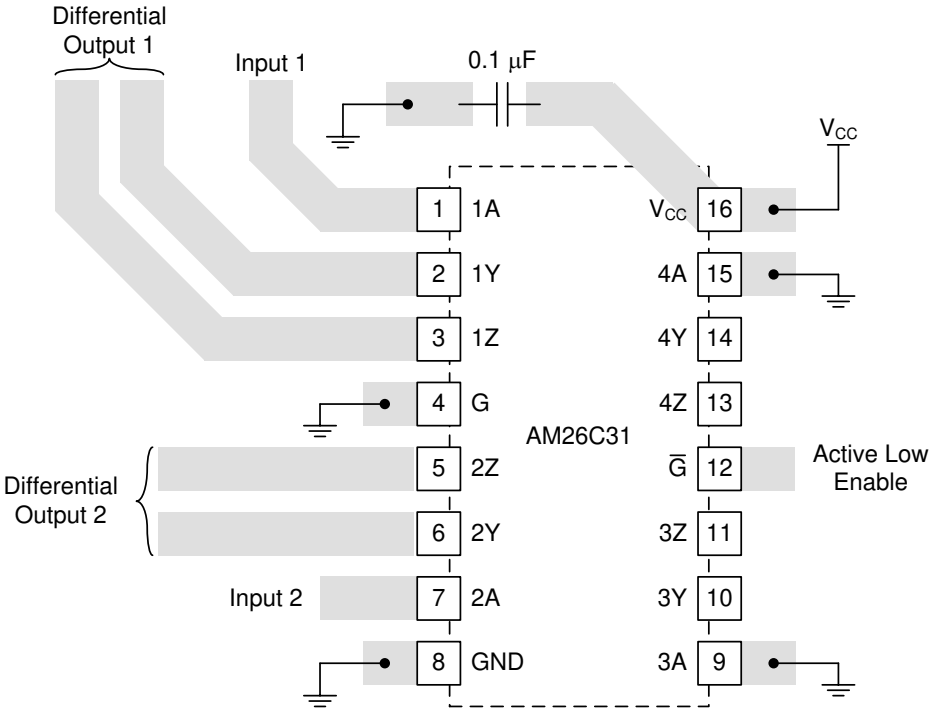


**Figure 8-3. Trace Layout on PCB and Recommendations**

# 9 Device and Documentation Support

## 9.1 Receiving Notification of Documentation Updates

To receive notification of documentation updates, navigate to the device product folder on ti.com. Click on *Notifications* to register and receive a weekly digest of any product information that has changed. For change details, review the revision history included in any revised document.

## 9.2 Support Resources

TI E2E™ support forums are an engineer's go-to source for fast, verified answers and design help — straight from the experts. Search existing answers or ask your own question to get the quick design help you need.

Linked content is provided "AS IS" by the respective contributors. They do not constitute TI specifications and do not necessarily reflect TI's views; see TI's Terms of Use.

## 9.3 Trademarks

TI E2E™ is a trademark of Texas Instruments.
All trademarks are the property of their respective owners.

## 9.4 Electrostatic Discharge Caution

This integrated circuit can be damaged by ESD. Texas Instruments recommends that all integrated circuits be handled with appropriate precautions. Failure to observe proper handling and installation procedures can cause damage.

ESD damage can range from subtle performance degradation to complete device failure. Precision integrated circuits may be more susceptible to damage because very small parametric changes could cause the device not to meet its published specifications.

## 9.5 Glossary

| | |
|---|---|
| TI Glossary | This glossary lists and explains terms, acronyms, and definitions. |

# 10 Revision History

NOTE: Page numbers for previous revisions may differ from page numbers in the current version.

| Changes from Revision O (June 2016) to Revision P (March 2024) | Page |
|---|---|
| • Changed the Device Information table to the *Package Information* table | 1 |
| • Changed *Thermal Information* table | 5 |
| • Changed Figure 5-1 | 7 |
| • Changed Figure 6-1 | 8 |

| Changes from Revision N (October 2011) to Revision O (Februrary 2014) | Page |
|---|---|
| • Updated the *Features* section and added the *Applications* section, the *Device Information* table, *ESD Ratings* table, *Feature Description* section, *Device Functional Modes*, *Application and Implementation* section, *Power Supply Recommendations* section, *Layout* section, *Device and Documentation Support* section, and *Mechanical, Packaging, and Orderable Information* section | 1 |
| • Deleted *Ordering Information* table, see POA at the end of the data sheet | 1 |
| • Changed *Thermal Information* table | 5 |

| Changes from Revision M (June 2008) to Revision N (October 2011) | Page |
|---|---|
| • Changed units to mA from µA to fix units typo | 4 |


Copyright © 2024 Texas Instruments Incorporated

## 11 Mechanical, Packaging, and Orderable Information

The following pages include mechanical packaging and orderable information. This information is the most current data available for the designated devices. This data is subject to change without notice and revision of this document. For browser based versions of this data sheet, refer to the left hand navigation.

## PACKAGING INFORMATION

| Orderable part number | Status (1) | Material type (2) | Package \| Pins | Package qty \| Carrier | RoHS (3) | Lead finish/ Ball material (4) | MSL rating/ Peak reflow (5) | Op temp (°C) | Part marking (6) |
|---|---|---|---|---|---|---|---|---|---|
| 5962-9163901M2A | Active | Production | LCCC (FK) \| 20 | 55 \| TUBE | No | SNPB | N/A for Pkg Type | -55 to 125 | 5962-9163901M2A AM26C31M |
| 5962-9163901M2A.A | Active | Production | LCCC (FK) \| 20 | 55 \| TUBE | No | SNPB | N/A for Pkg Type | -55 to 125 | 5962-9163901M2A AM26C31M |
| 5962-9163901MEA | Active | Production | CDIP (J) \| 16 | 25 \| TUBE | No | SNPB | N/A for Pkg Type | -55 to 125 | 5962-9163901ME A AM26C31M |
| 5962-9163901MEA.A | Active | Production | CDIP (J) \| 16 | 25 \| TUBE | No | SNPB | N/A for Pkg Type | -55 to 125 | 5962-9163901ME A AM26C31M |
| 5962-9163901MFA | Active | Production | CFP (W) \| 16 | 25 \| TUBE | No | SNPB | N/A for Pkg Type | -55 to 125 | 5962-9163901MF A AM26C31M |
| 5962-9163901MFA.A | Active | Production | CFP (W) \| 16 | 25 \| TUBE | No | SNPB | N/A for Pkg Type | -55 to 125 | 5962-9163901MF A AM26C31M |
| 5962-9163901Q2A | Active | Production | LCCC (FK) \| 20 | 55 \| TUBE | No | SNPB | N/A for Pkg Type | -55 to 125 | 5962-9163901Q2A AM26C31 MFKB |
| 5962-9163901QEA | Active | Production | CDIP (J) \| 16 | 25 \| TUBE | No | SNPB | N/A for Pkg Type | -55 to 125 | 5962-9163901QE A AM26C31MJB |
| 5962-9163901QFA | Active | Production | CFP (W) \| 16 | 25 \| TUBE | No | SNPB | N/A for Pkg Type | -55 to 125 | 5962-9163901QF A AM26C31MWB |
| AM26C31CD | Obsolete | Production | SOIC (D) \| 16 | - | - | Call TI | Call TI | 0 to 70 | AM26C31C |
| AM26C31CDBR | Obsolete | Production | SSOP (DB) \| 16 | - | - | Call TI | Call TI | 0 to 70 | 26C31 |
| AM26C31CDR | Obsolete | Production | SOIC (D) \| 16 | - | - | Call TI | Call TI | 0 to 70 | AM26C31C |
| AM26C31CN | Active | Production | PDIP (N) \| 16 | 25 \| TUBE | Yes | NIPDAU | N/A for Pkg Type | 0 to 70 | AM26C31CN |
| AM26C31CN.A | Active | Production | PDIP (N) \| 16 | 25 \| TUBE | Yes | NIPDAU | N/A for Pkg Type | 0 to 70 | AM26C31CN |
| AM26C31CNSR | Active | Production | SOP (NS) \| 16 | 2000 \| LARGE T&R | Yes | NIPDAU | Level-1-260C-UNLIM | -40 to 125 | 26C31 |

| Orderable part number | Status (1) | Material type (2) | Package \| Pins | Package qty \| Carrier | RoHS (3) | Lead finish/ Ball material (4) | MSL rating/ Peak reflow (5) | Op temp (°C) | Part marking (6) |
|---|---|---|---|---|---|---|---|---|---|
| AM26C31CNSR.A | Active | Production | SOP (NS) \| 16 | 2000 \| LARGE T&R | Yes | NIPDAU | Level-1-260C-UNLIM | 0 to 70 | 26C31 |
| AM26C31ID | Obsolete | Production | SOIC (D) \| 16 | - | - | Call TI | Call TI | -40 to 85 | AM26C31I |
| AM26C31IDBR | Active | Production | SSOP (DB) \| 16 | 2000 \| LARGE T&R | Yes | NIPDAU | Level-1-260C-UNLIM | -40 to 125 | 26C31I |
| AM26C31IDBR.A | Active | Production | SSOP (DB) \| 16 | 2000 \| LARGE T&R | Yes | NIPDAU | Level-1-260C-UNLIM | -40 to 85 | 26C31I |
| AM26C31IDBRE4 | Active | Production | SSOP (DB) \| 16 | 2000 \| LARGE T&R | Yes | NIPDAU | Level-1-260C-UNLIM | -40 to 85 | 26C31I |
| AM26C31IDR | Active | Production | SOIC (D) \| 16 | 2500 \| LARGE T&R | Yes | NIPDAU | Level-1-260C-UNLIM | -40 to 125 | AM26C31I |
| AM26C31IDR.A | Active | Production | SOIC (D) \| 16 | 2500 \| LARGE T&R | Yes | NIPDAU | Level-1-260C-UNLIM | -40 to 85 | AM26C31I |
| AM26C31IDRG4 | Obsolete | Production | SOIC (D) \| 16 | - | - | Call TI | Call TI | -40 to 85 | AM26C31I |
| AM26C31IN | Active | Production | PDIP (N) \| 16 | 25 \| TUBE | Yes | NIPDAU | N/A for Pkg Type | -40 to 125 | AM26C31IN |
| AM26C31IN.A | Active | Production | PDIP (N) \| 16 | 25 \| TUBE | Yes | NIPDAU | N/A for Pkg Type | -40 to 85 | AM26C31IN |
| AM26C31INE4 | Active | Production | PDIP (N) \| 16 | 25 \| TUBE | Yes | NIPDAU | N/A for Pkg Type | -40 to 85 | AM26C31IN |
| AM26C31INSR | Active | Production | SOP (NS) \| 16 | 2000 \| LARGE T&R | Yes | NIPDAU | Level-1-260C-UNLIM | -40 to 125 | 26C31I |
| AM26C31INSR.A | Active | Production | SOP (NS) \| 16 | 2000 \| LARGE T&R | Yes | NIPDAU | Level-1-260C-UNLIM | -40 to 85 | 26C31I |
| AM26C31IPW | Obsolete | Production | TSSOP (PW) \| 16 | - | - | Call TI | Call TI | -40 to 85 | 26C31I |
| AM26C31IPWR | Active | Production | TSSOP (PW) \| 16 | 2000 \| LARGE T&R | Yes | NIPDAU \| SN | Level-1-260C-UNLIM | -40 to 125 | 26C31I |
| AM26C31IPWR.A | Active | Production | TSSOP (PW) \| 16 | 2000 \| LARGE T&R | Yes | NIPDAU | Level-1-260C-UNLIM | -40 to 85 | 26C31I |
| AM26C31IPWRG4 | Obsolete | Production | TSSOP (PW) \| 16 | - | - | Call TI | Call TI | -40 to 85 | 26C31I |
| AM26C31MFKB | Active | Production | LCCC (FK) \| 20 | 55 \| TUBE | No | SNPB | N/A for Pkg Type | -55 to 125 | 5962-9163901Q2A AM26C31 MFKB |
| AM26C31MFKB.A | Active | Production | LCCC (FK) \| 20 | 55 \| TUBE | No | SNPB | N/A for Pkg Type | -55 to 125 | 5962-9163901Q2A AM26C31 MFKB |
| AM26C31MJB | Active | Production | CDIP (J) \| 16 | 25 \| TUBE | No | SNPB | N/A for Pkg Type | -55 to 125 | 5962-9163901QEA AM26C31MJB |
| AM26C31MJB.A | Active | Production | CDIP (J) \| 16 | 25 \| TUBE | No | SNPB | N/A for Pkg Type | -55 to 125 | 5962-9163901QEA AM26C31MJB |
| AM26C31MWB | Active | Production | CFP (W) \| 16 | 25 \| TUBE | No | SNPB | N/A for Pkg Type | -55 to 125 | 5962-9163901QFA AM26C31MWB |

| Orderable part number | Status (1) | Material type (2) | Package \| Pins | Package qty \| Carrier | RoHS (3) | Lead finish/ Ball material (4) | MSL rating/ Peak reflow (5) | Op temp (°C) | Part marking (6) |
|---|---|---|---|---|---|---|---|---|---|
| AM26C31MWB.A | Active | Production | CFP (W) \| 16 | 25 \| TUBE | No | SNPB | N/A for Pkg Type | -55 to 125 | 5962-9163901QF A AM26C31MWB |
| AM26C31QD | Obsolete | Production | SOIC (D) \| 16 | - | - | Call TI | Call TI | -40 to 125 | AM26C31Q |
| AM26C31QDG4 | Obsolete | Production | SOIC (D) \| 16 | - | - | Call TI | Call TI | -40 to 125 | 26C31Q |
| AM26C31QDR | Active | Production | SOIC (D) \| 16 | 2500 \| LARGE T&R | Yes | NIPDAU | Level-1-260C-UNLIM | -40 to 125 | AM26C31Q |
| AM26C31QDR.A | Active | Production | SOIC (D) \| 16 | 2500 \| LARGE T&R | Yes | NIPDAU | Level-1-260C-UNLIM | -40 to 125 | AM26C31Q |
| AM26C31QDRG4 | Active | Production | SOIC (D) \| 16 | 2500 \| LARGE T&R | Yes | NIPDAU | Level-1-260C-UNLIM | -40 to 125 | 26C31Q |
| AM26C31QDRG4.A | Active | Production | SOIC (D) \| 16 | 2500 \| LARGE T&R | Yes | NIPDAU | Level-1-260C-UNLIM | -40 to 125 | 26C31Q |

(1) **Status:** For more details on status, see our product life cycle.

(2) **Material type:** When designated, preproduction parts are prototypes/experimental devices, and are not yet approved or released for full production. Testing and final process, including without limitation quality assurance, reliability performance testing, and/or process qualification, may not yet be complete, and this item is subject to further changes or possible discontinuation. If available for ordering, purchases will be subject to an additional waiver at checkout, and are intended for early internal evaluation purposes only. These items are sold without warranties of any kind.

(3) **RoHS values:** Yes, No, RoHS Exempt. See the TI RoHS Statement for additional information and value definition.

(4) **Lead finish/Ball material:** Parts may have multiple material finish options. Finish options are separated by a vertical ruled line. Lead finish/Ball material values may wrap to two lines if the finish value exceeds the maximum column width.

(5) **MSL rating/Peak reflow:** The moisture sensitivity level ratings and peak solder (reflow) temperatures. In the event that a part has multiple moisture sensitivity ratings, only the lowest level per JEDEC standards is shown. Refer to the shipping label for the actual reflow temperature that will be used to mount the part to the printed circuit board.

(6) **Part marking:** There may be an additional marking, which relates to the logo, the lot trace code information, or the environmental category of the part.

Multiple part markings will be inside parentheses. Only one part marking contained in parentheses and separated by a "~" will appear on a part. If a line is indented then it is a continuation of the previous line and the two combined represent the entire part marking for that device.

**Important Information and Disclaimer:**The information provided on this page represents TI's knowledge and belief as of the date that it is provided. TI bases its knowledge and belief on information provided by third parties, and makes no representation or warranty as to the accuracy of such information. Efforts are underway to better integrate information from third parties. TI has taken and continues to take reasonable steps to provide representative and accurate information but may not have conducted destructive testing or chemical analysis on incoming materials and chemicals. TI and TI suppliers consider certain information to be proprietary, and thus CAS numbers and other limited information may not be available for release.

In no event shall TI's liability arising out of such information exceed the total purchase price of the TI part(s) at issue in this document sold by TI to Customer on an annual basis.

**OTHER QUALIFIED VERSIONS OF AM26C31, AM26C31M :**

- Catalog : AM26C31
- Enhanced Product : AM26C31-EP, AM26C31-EP
- Military : AM26C31M

NOTE: Qualified Version Definitions:

- Catalog - TI's standard catalog product
- Enhanced Product - Supports Defense, Aerospace and Medical Applications
- Military - QML certified for Military and Defense Applications

## TAPE AND REEL INFORMATION

**REEL DIMENSIONS**

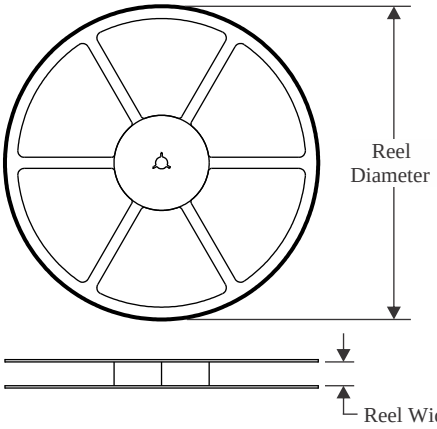


**TAPE DIMENSIONS**

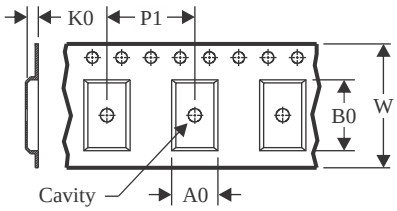


| | |
|---|---|
| A0 | Dimension designed to accommodate the component width |
| B0 | Dimension designed to accommodate the component length |
| K0 | Dimension designed to accommodate the component thickness |
| W | Overall width of the carrier tape |
| P1 | Pitch between successive cavity centers |

**QUADRANT ASSIGNMENTS FOR PIN 1 ORIENTATION IN TAPE**

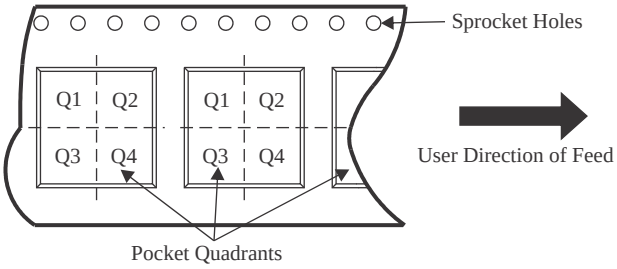


*All dimensions are nominal

| Device | Package Type | Package Drawing | Pins | SPQ | Reel Diameter (mm) | Reel Width W1 (mm) | A0 (mm) | B0 (mm) | K0 (mm) | P1 (mm) | W (mm) | Pin1 Quadrant |
|---|---|---|---|---|---|---|---|---|---|---|---|---|
| AM26C31CNSR | SOP | NS | 16 | 2000 | 330.0 | 16.4 | 8.1 | 10.4 | 2.5 | 12.0 | 16.0 | Q1 |
| AM26C31IDBR | SSOP | DB | 16 | 2000 | 330.0 | 16.4 | 8.35 | 6.6 | 2.4 | 12.0 | 16.0 | Q1 |
| AM26C31IDR | SOIC | D | 16 | 2500 | 330.0 | 16.4 | 6.5 | 10.3 | 2.1 | 8.0 | 16.0 | Q1 |
| AM26C31IDR | SOIC | D | 16 | 2500 | 330.0 | 16.4 | 6.5 | 10.3 | 2.1 | 8.0 | 16.0 | Q1 |
| AM26C31INSR | SOP | NS | 16 | 2000 | 330.0 | 16.4 | 8.1 | 10.4 | 2.5 | 12.0 | 16.0 | Q1 |
| AM26C31IPWR | TSSOP | PW | 16 | 2000 | 330.0 | 12.4 | 6.9 | 5.6 | 1.6 | 8.0 | 12.0 | Q1 |
| AM26C31IPWR | TSSOP | PW | 16 | 2000 | 330.0 | 12.4 | 6.9 | 5.6 | 1.6 | 8.0 | 12.0 | Q1 |
| AM26C31QDR | SOIC | D | 16 | 2500 | 330.0 | 16.4 | 6.5 | 10.3 | 2.1 | 8.0 | 16.0 | Q1 |
| AM26C31QDRG4 | SOIC | D | 16 | 2500 | 330.0 | 16.4 | 6.5 | 10.3 | 2.1 | 8.0 | 16.0 | Q1 |

TAPE AND REEL BOX DIMENSIONS

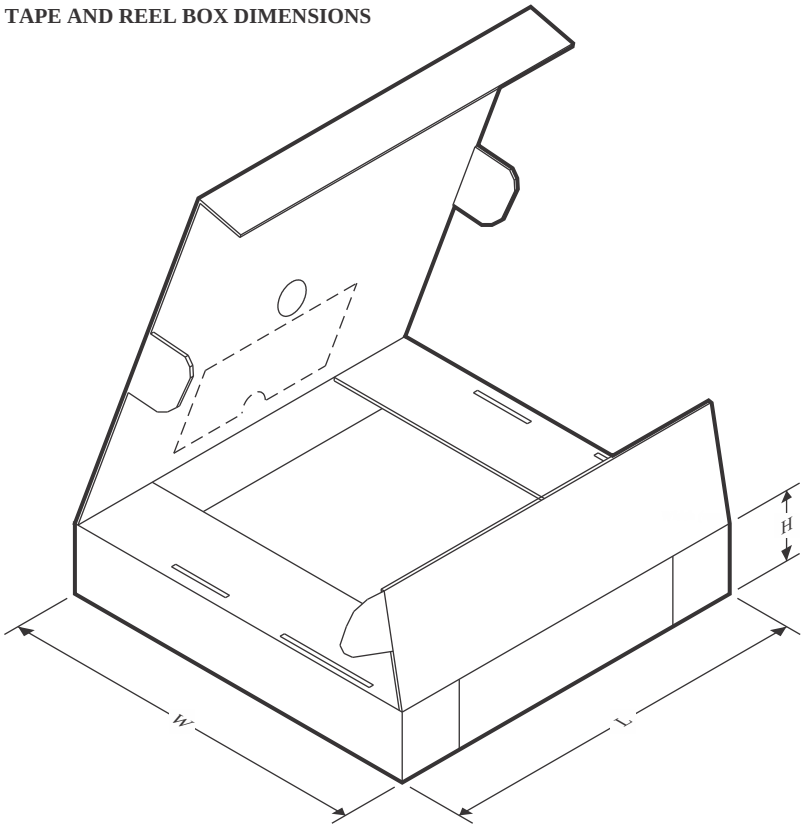


*All dimensions are nominal

| Device | Package Type | Package Drawing | Pins | SPQ | Length (mm) | Width (mm) | Height (mm) |
|---|---|---|---|---|---|---|---|
| AM26C31CNSR | SOP | NS | 16 | 2000 | 353.0 | 353.0 | 32.0 |
| AM26C31IDBR | SSOP | DB | 16 | 2000 | 353.0 | 353.0 | 32.0 |
| AM26C31IDR | SOIC | D | 16 | 2500 | 353.0 | 353.0 | 32.0 |
| AM26C31IDR | SOIC | D | 16 | 2500 | 340.5 | 336.1 | 32.0 |
| AM26C31INSR | SOP | NS | 16 | 2000 | 353.0 | 353.0 | 32.0 |
| AM26C31IPWR | TSSOP | PW | 16 | 2000 | 356.0 | 356.0 | 35.0 |
| AM26C31IPWR | TSSOP | PW | 16 | 2000 | 353.0 | 353.0 | 32.0 |
| AM26C31QDR | SOIC | D | 16 | 2500 | 353.0 | 353.0 | 32.0 |
| AM26C31QDRG4 | SOIC | D | 16 | 2500 | 353.0 | 353.0 | 32.0 |

## TUBE

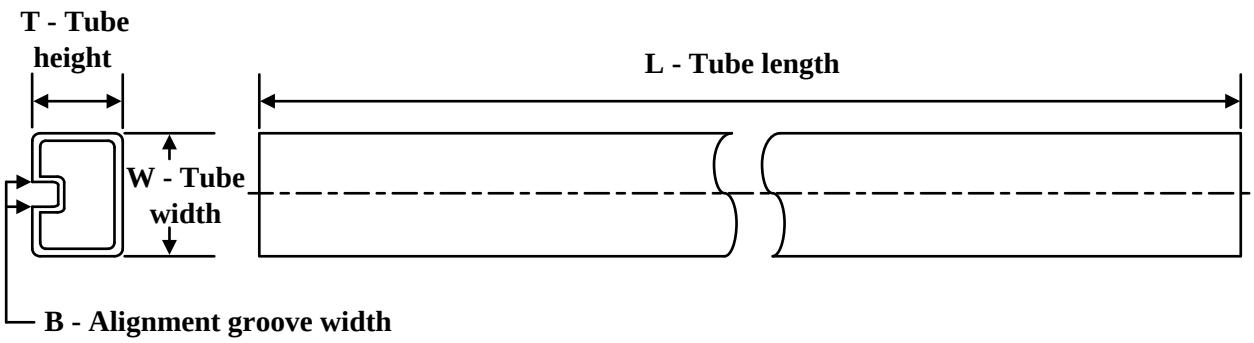


*All dimensions are nominal

| Device | Package Name | Package Type | Pins | SPQ | L (mm) | W (mm) | T (µm) | B (mm) |
|---|---|---|---|---|---|---|---|---|
| 5962-9163901M2A | FK | LCCC | 20 | 55 | 506.98 | 12.06 | 2030 | NA |
| 5962-9163901M2A.A | FK | LCCC | 20 | 55 | 506.98 | 12.06 | 2030 | NA |
| 5962-9163901MFA | W | CFP | 16 | 25 | 506.98 | 26.16 | 6220 | NA |
| 5962-9163901MFA.A | W | CFP | 16 | 25 | 506.98 | 26.16 | 6220 | NA |
| 5962-9163901Q2A | FK | LCCC | 20 | 55 | 506.98 | 12.06 | 2030 | NA |
| 5962-9163901QFA | W | CFP | 16 | 25 | 506.98 | 26.16 | 6220 | NA |
| AM26C31CN | N | PDIP | 16 | 25 | 506 | 13.97 | 11230 | 4.32 |
| AM26C31CN.A | N | PDIP | 16 | 25 | 506 | 13.97 | 11230 | 4.32 |
| AM26C31IN | N | PDIP | 16 | 25 | 506 | 13.97 | 11230 | 4.32 |
| AM26C31IN.A | N | PDIP | 16 | 25 | 506 | 13.97 | 11230 | 4.32 |
| AM26C31INE4 | N | PDIP | 16 | 25 | 506 | 13.97 | 11230 | 4.32 |
| AM26C31MFKB | FK | LCCC | 20 | 55 | 506.98 | 12.06 | 2030 | NA |
| AM26C31MFKB.A | FK | LCCC | 20 | 55 | 506.98 | 12.06 | 2030 | NA |
| AM26C31MWB | W | CFP | 16 | 25 | 506.98 | 26.16 | 6220 | NA |
| AM26C31MWB.A | W | CFP | 16 | 25 | 506.98 | 26.16 | 6220 | NA |

D (R–PDSO–G16) PLASTIC SMALL OUTLINE

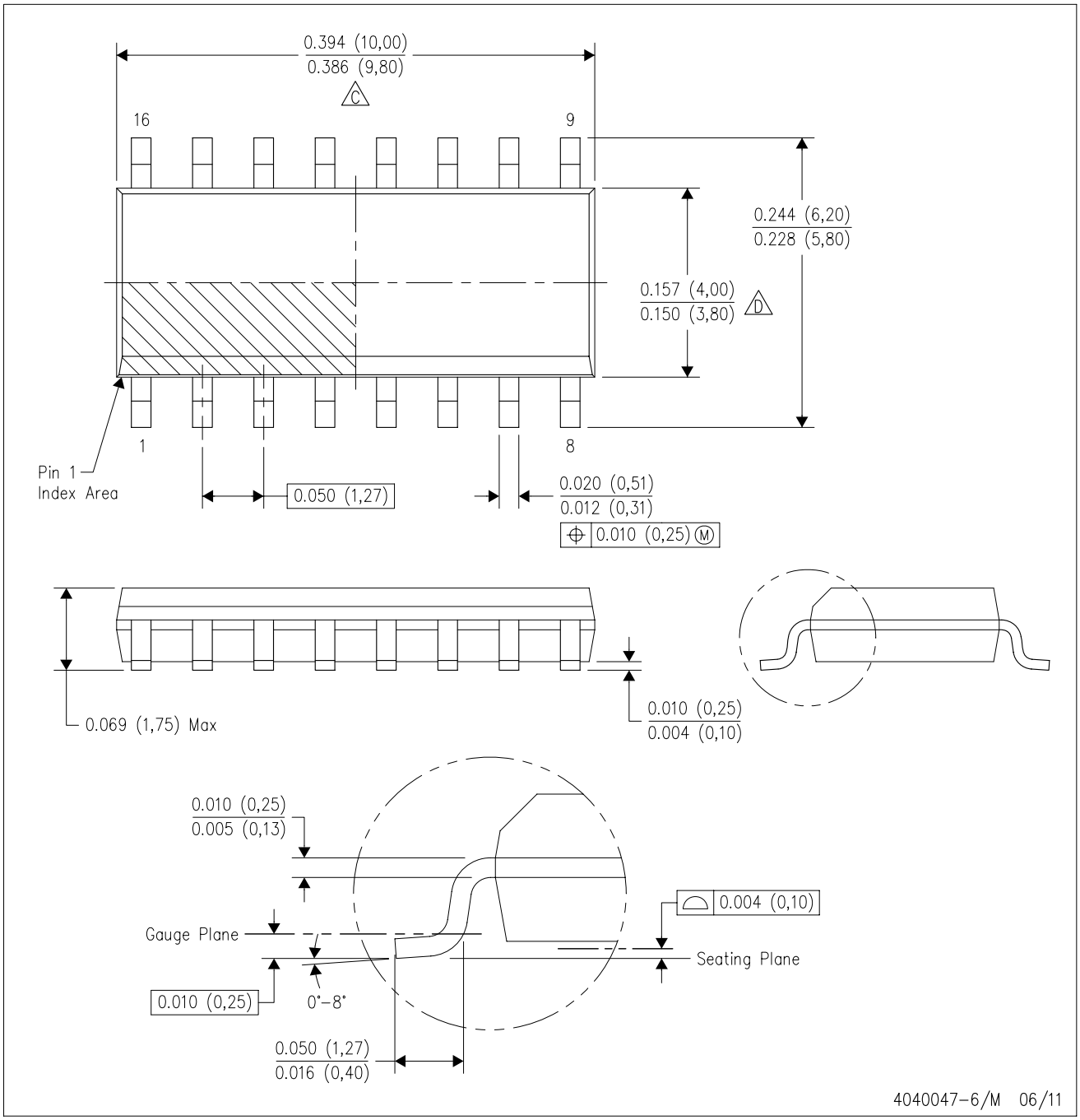


NOTES:
A. All linear dimensions are in inches (millimeters).
B. This drawing is subject to change without notice.
C. Body length does not include mold flash, protrusions, or gate burrs. Mold flash, protrusions, or gate burrs shall not exceed 0.006 (0,15) each side.
D. Body width does not include interlead flash. Interlead flash shall not exceed 0.017 (0,43) each side.
E. Reference JEDEC MS–012 variation AC.

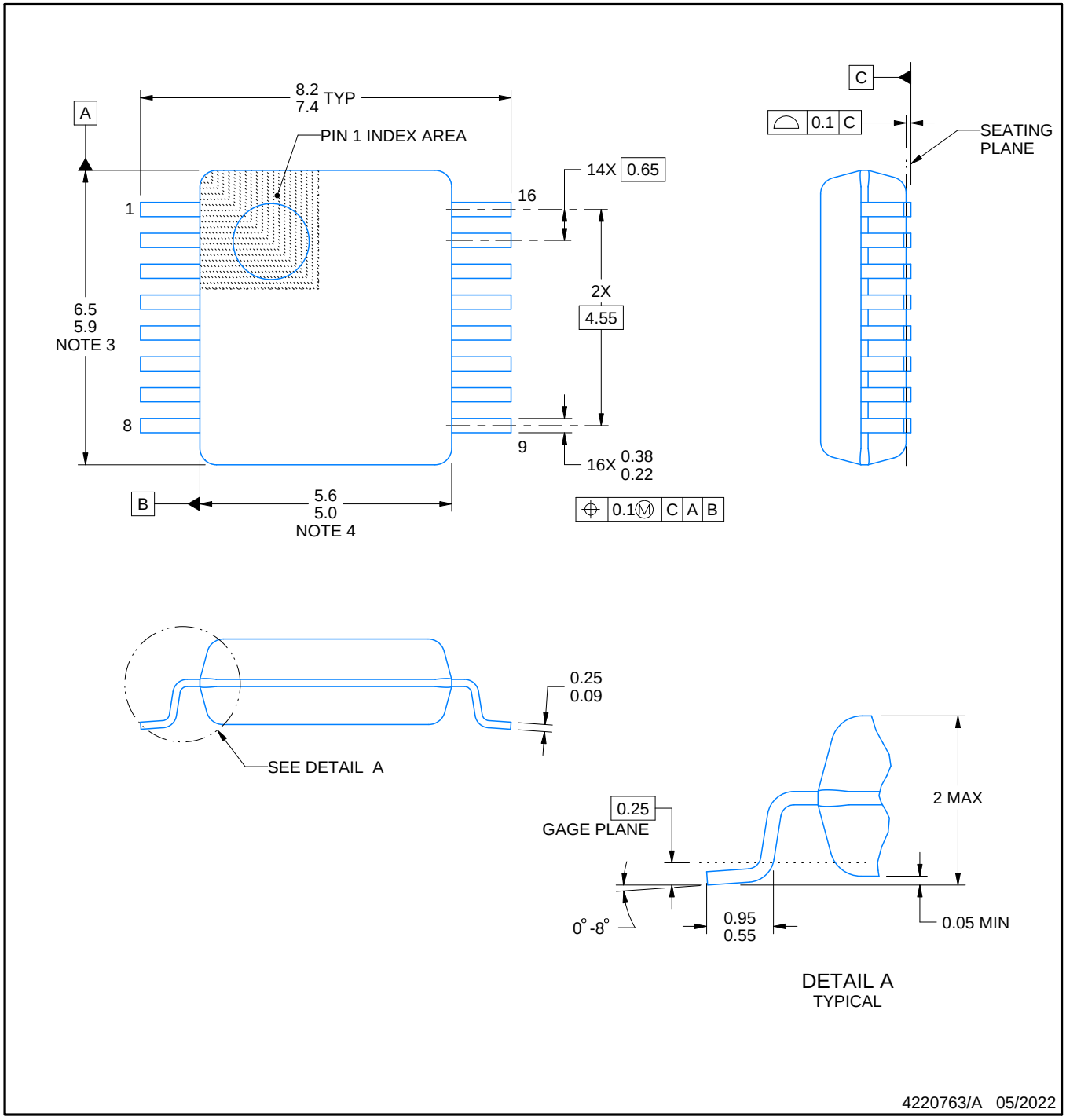


NOTES:

1. All linear dimensions are in millimeters. Any dimensions in parenthesis are for reference only. Dimensioning and tolerancing per ASME Y14.5M.
2. This drawing is subject to change without notice.
3. This dimension does not include mold flash, protrusions, or gate burrs. Mold flash, protrusions, or gate burrs shall not exceed 0.15 mm per side.
4. Reference JEDEC registration MO-150.

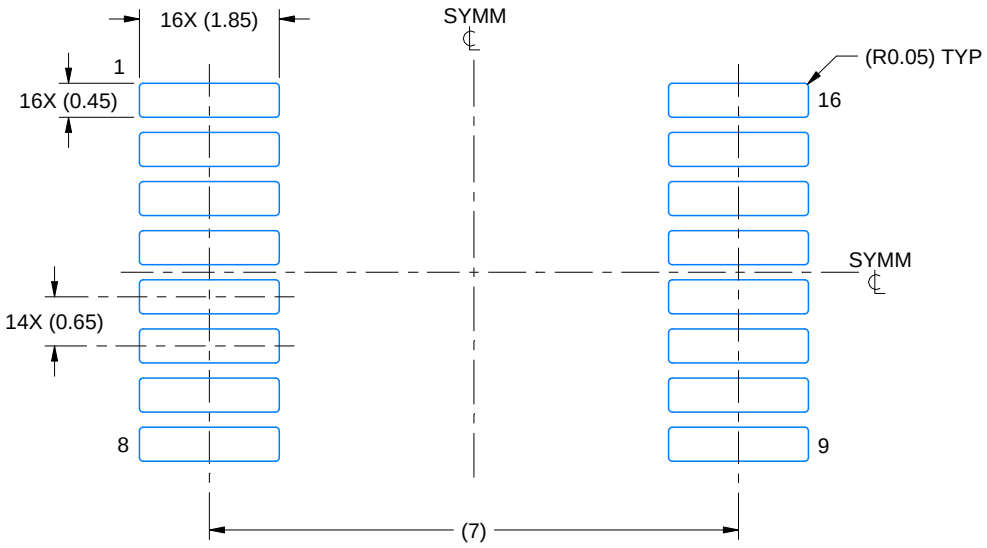


LAND PATTERN EXAMPLE
EXPOSED METAL SHOWN
SCALE: 10X

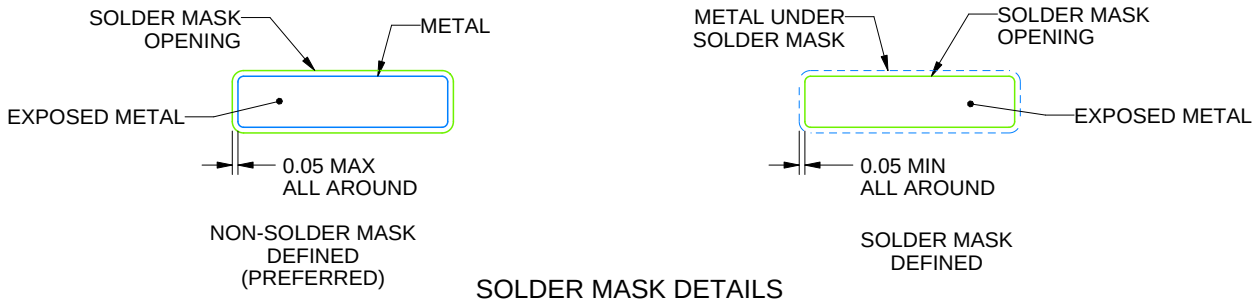


SOLDER MASK DETAILS

4220763/A 05/2022

NOTES: (continued)

5. Publication IPC-7351 may have alternate designs.
6. Solder mask tolerances between and around signal pads can vary based on board fabrication site.

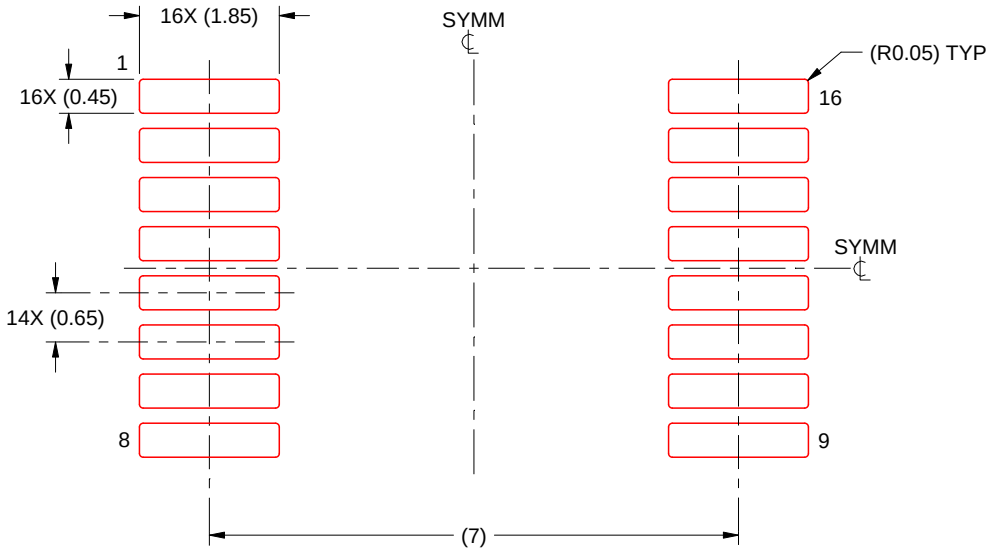


SOLDER PASTE EXAMPLE
BASED ON 0.125 mm THICK STENCIL
SCALE: 10X

4220763/A 05/2022

NOTES: (continued)

7. Laser cutting apertures with trapezoidal walls and rounded corners may offer better paste release. IPC-7525 may have alternate design recommendations.
8. Board assembly site may have different recommendations for stencil design.

W (R–GDFP–F16) CERAMIC DUAL FLATPACK

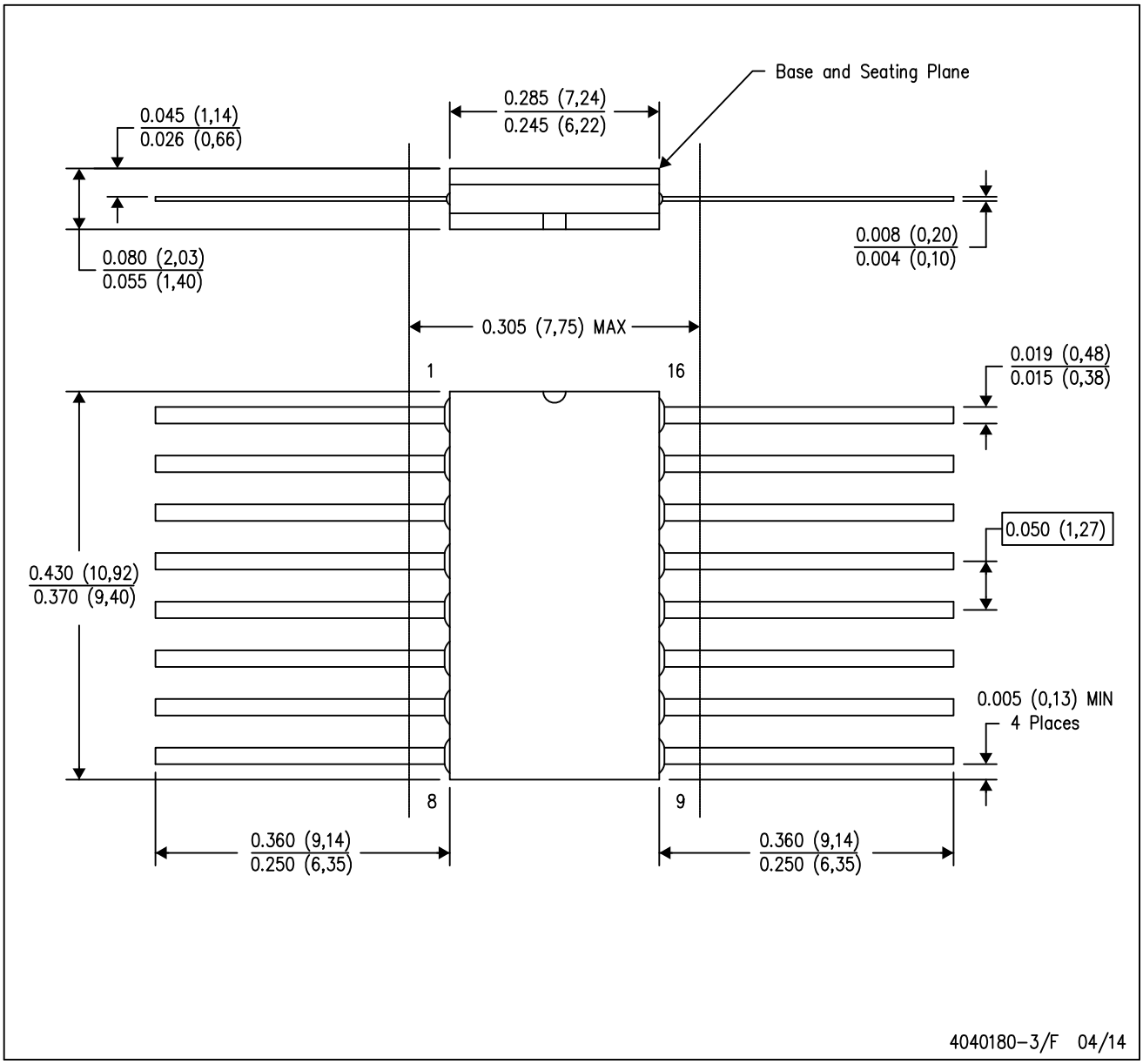


NOTES:
A. All linear dimensions are in inches (millimeters).
B. This drawing is subject to change without notice.
C. This package can be hermetically sealed with a ceramic lid using glass frit.
D. Index point is provided on cap for terminal identification only.
E. Falls within MIL STD 1835 GDFP2–F16

# GENERIC PACKAGE VIEW

## FK 20

## LCCC - 2.03 mm max height

**8.89 x 8.89, 1.27 mm pitch**

LEADLESS CERAMIC CHIP CARRIER

This image is a representation of the package family, actual package may vary.
Refer to the product data sheet for package details.

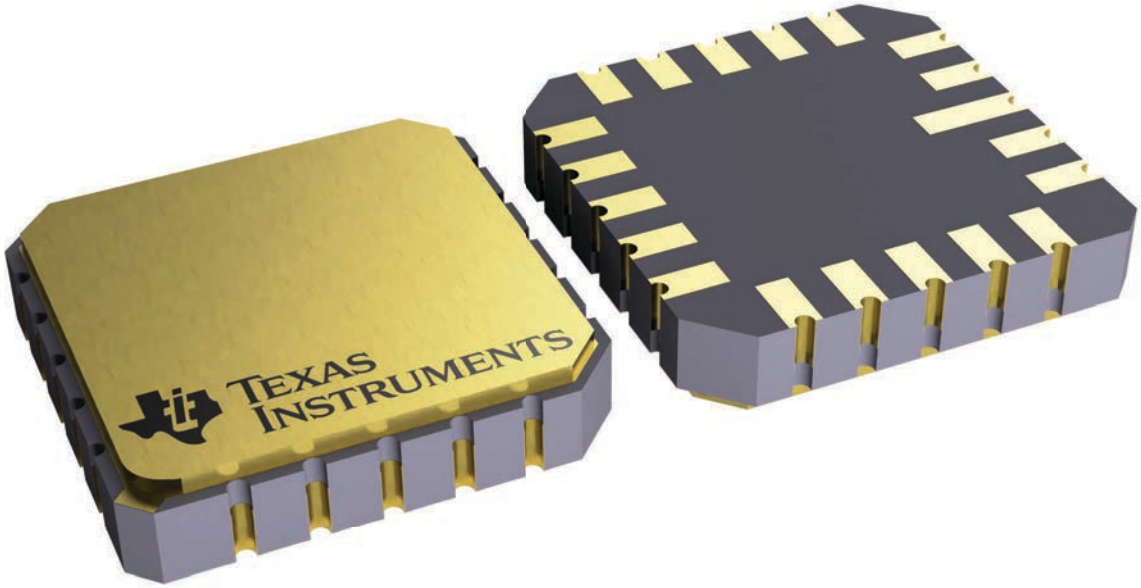


4229370VA\

J (R–GDIP–T**) CERAMIC DUAL IN–LINE PACKAGE

14 LEADS SHOWN

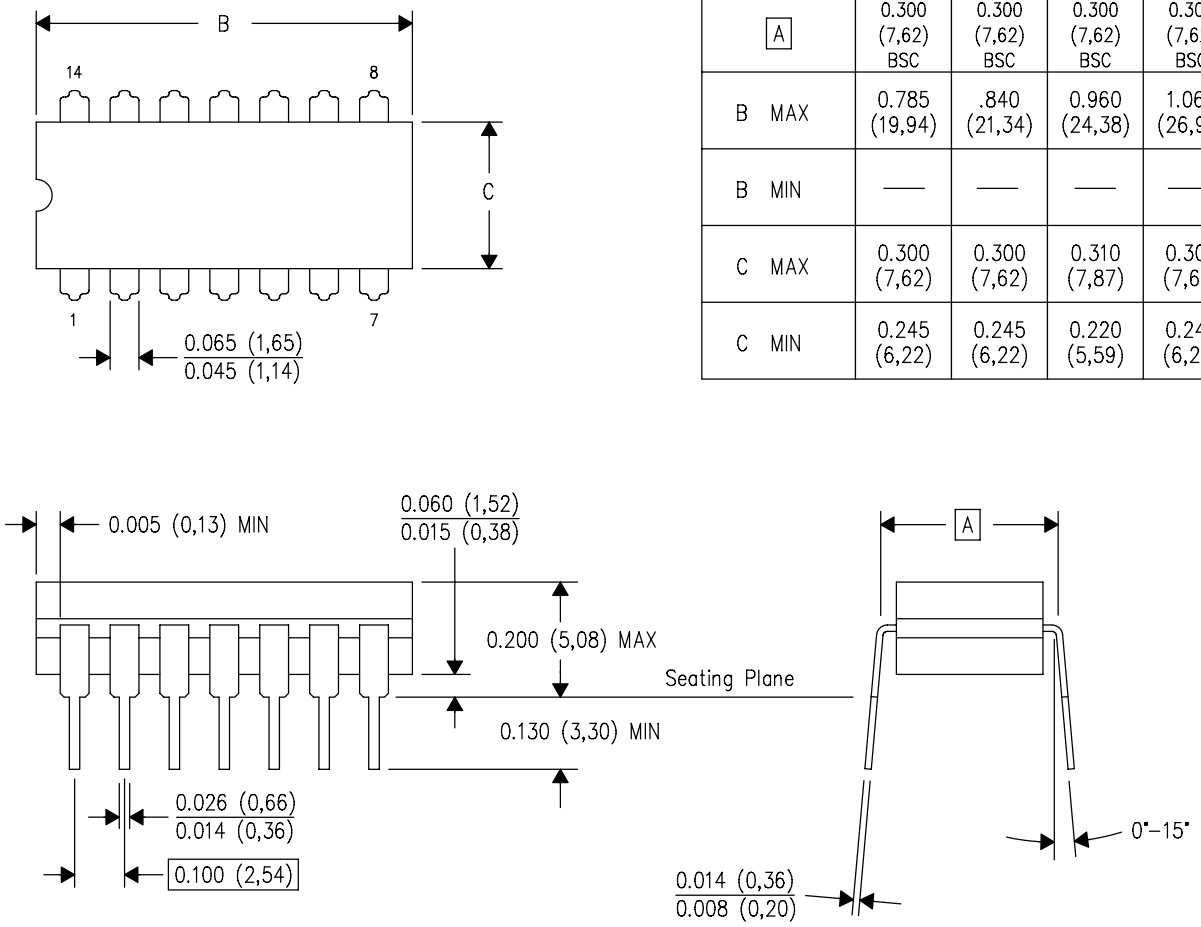


| DIM \ PINS ** | 14 | 16 | 18 | 20 |
|---|---|---|---|---|
| A | 0.300 (7,62) BSC | 0.300 (7,62) BSC | 0.300 (7,62) BSC | 0.300 (7,62) BSC |
| B MAX | 0.785 (19,94) | .840 (21,34) | 0.960 (24,38) | 1.060 (26,92) |
| B MIN | — | — | — | — |
| C MAX | 0.300 (7,62) | 0.300 (7,62) | 0.310 (7,87) | 0.300 (7,62) |
| C MIN | 0.245 (6,22) | 0.245 (6,22) | 0.220 (5,59) | 0.245 (6,22) |

4040083/F 03/03

NOTES:
- A. All linear dimensions are in inches (millimeters).
- B. This drawing is subject to change without notice.
- C. This package is hermetically sealed with a ceramic lid using glass frit.
- D. Index point is provided on cap for terminal identification only on press ceramic glass frit seal only.
- E. Falls within MIL STD 1835 GDIP1–T14, GDIP1–T16, GDIP1–T18 and GDIP1–T20.

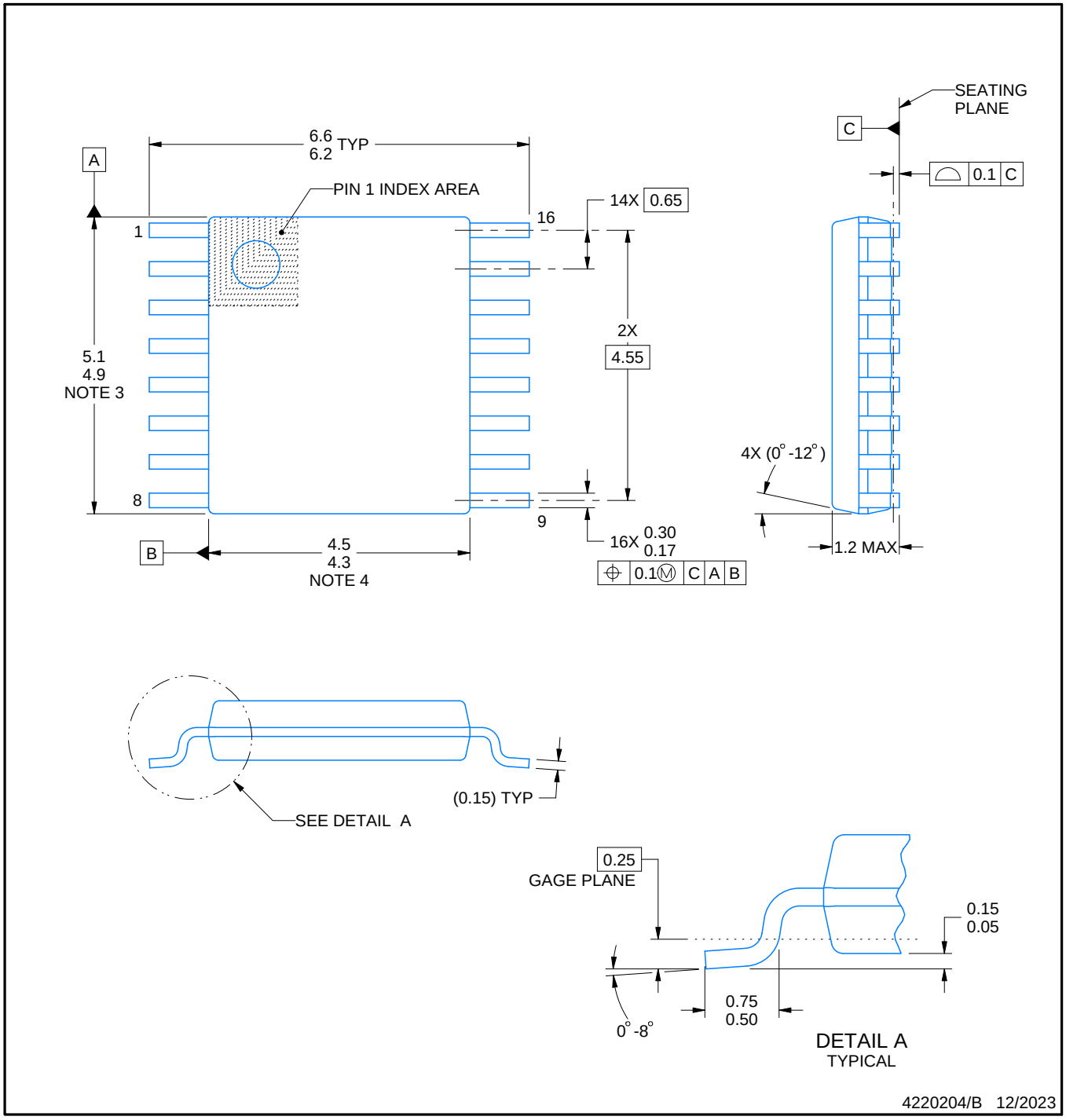


NOTES:

1. All linear dimensions are in millimeters. Any dimensions in parenthesis are for reference only. Dimensioning and tolerancing per ASME Y14.5M.
2. This drawing is subject to change without notice.
3. This dimension does not include mold flash, protrusions, or gate burrs. Mold flash, protrusions, or gate burrs shall not exceed 0.15 mm per side.
4. This dimension does not include interlead flash. Interlead flash shall not exceed 0.25 mm per side.
5. Reference JEDEC registration MO-153.

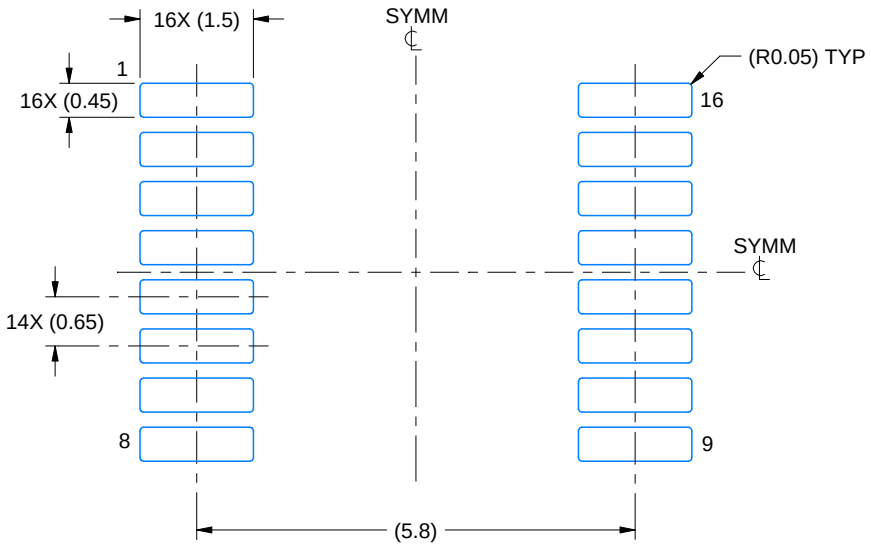


LAND PATTERN EXAMPLE
EXPOSED METAL SHOWN
SCALE: 10X

NON-SOLDER MASK DEFINED (PREFERRED)

SOLDER MASK DEFINED

SOLDER MASK DETAILS

4220204/B 12/2023

NOTES: (continued)

6. Publication IPC-7351 may have alternate designs.
7. Solder mask tolerances between and around signal pads can vary based on board fabrication site.

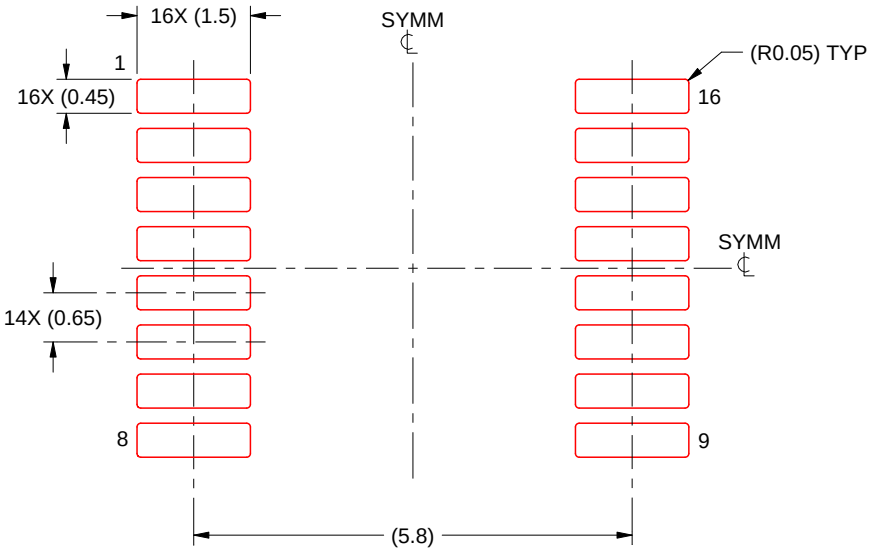


SOLDER PASTE EXAMPLE
BASED ON 0.125 mm THICK STENCIL
SCALE: 10X

4220204/B 12/2023

NOTES: (continued)

8. Laser cutting apertures with trapezoidal walls and rounded corners may offer better paste release. IPC-7525 may have alternate design recommendations.
9. Board assembly site may have different recommendations for stencil design.

## N (R–PDIP–T**) PLASTIC DUAL–IN–LINE PACKAGE

16 PINS SHOWN

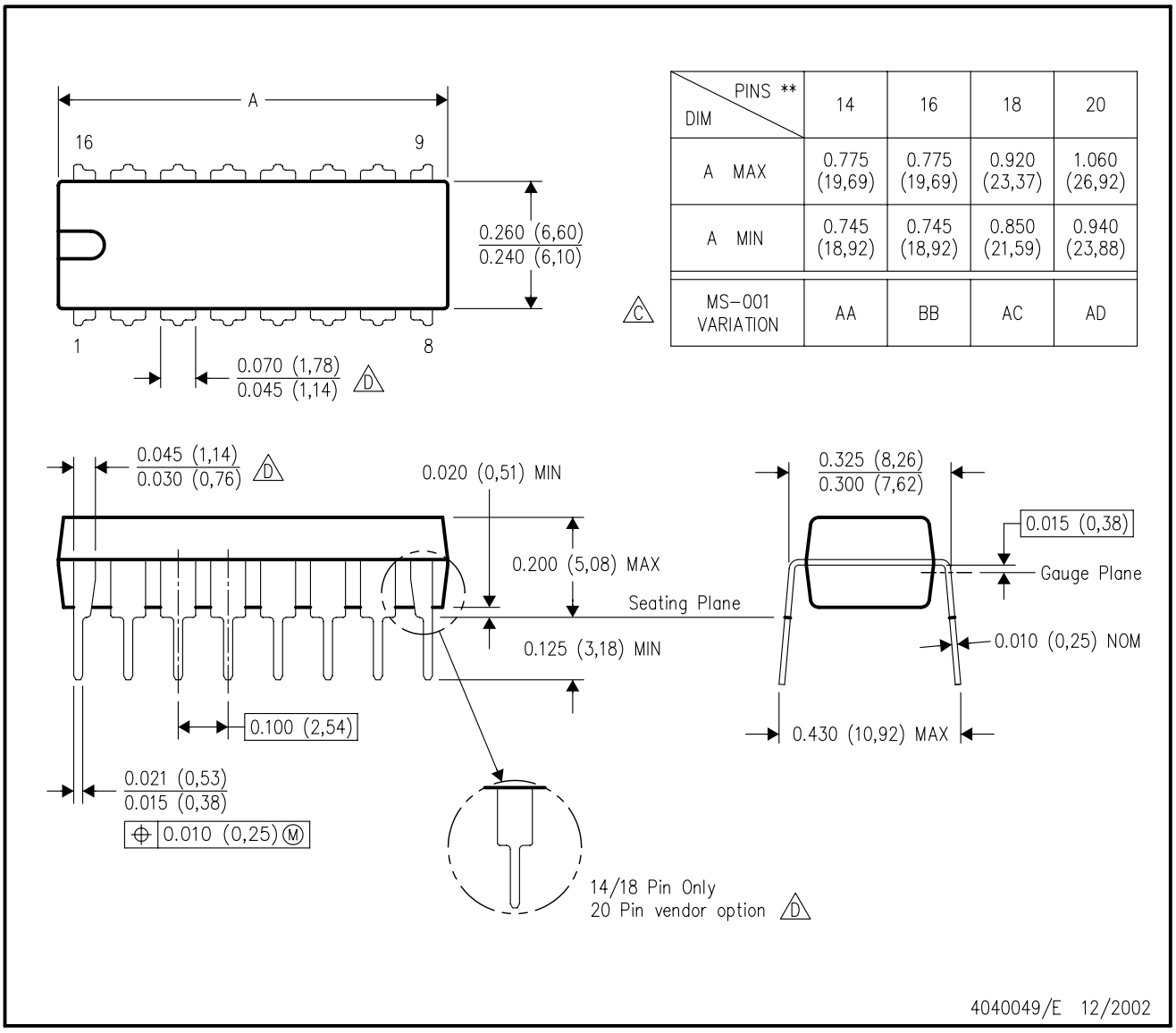


| DIM \ PINS ** | 14 | 16 | 18 | 20 |
|---|---|---|---|---|
| A MAX | 0.775 (19,69) | 0.775 (19,69) | 0.920 (23,37) | 1.060 (26,92) |
| A MIN | 0.745 (18,92) | 0.745 (18,92) | 0.850 (21,59) | 0.940 (23,88) |
| MS–001 VARIATION (C) | AA | BB | AC | AD |

NOTES:
A. All linear dimensions are in inches (millimeters).
B. This drawing is subject to change without notice.
C. Falls within JEDEC MS–001, except 18 and 20 pin minimum body length (Dim A).
D. The 20 pin end lead shoulder width is a vendor option, either half or full width.

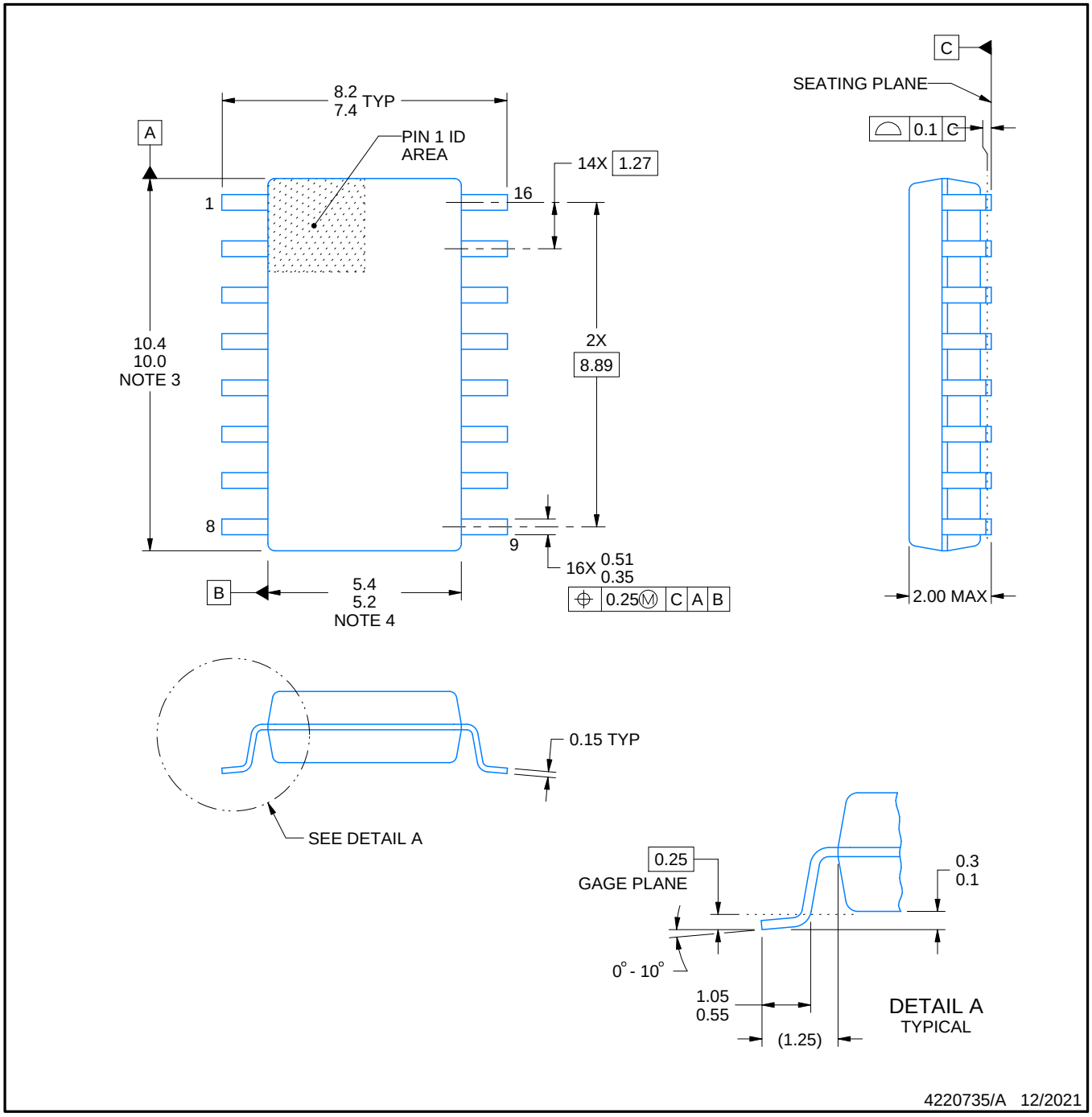


NOTES:

1. All linear dimensions are in millimeters. Dimensions in parenthesis are for reference only. Dimensioning and tolerancing per ASME Y14.5M.
2. This drawing is subject to change without notice.
3. This dimension does not include mold flash, protrusions, or gate burrs. Mold flash, protrusions, or gate burrs shall not exceed 0.15 mm, per side.
4. This dimension does not include interlead flash. Interlead flash shall not exceed 0.25 mm, per side.

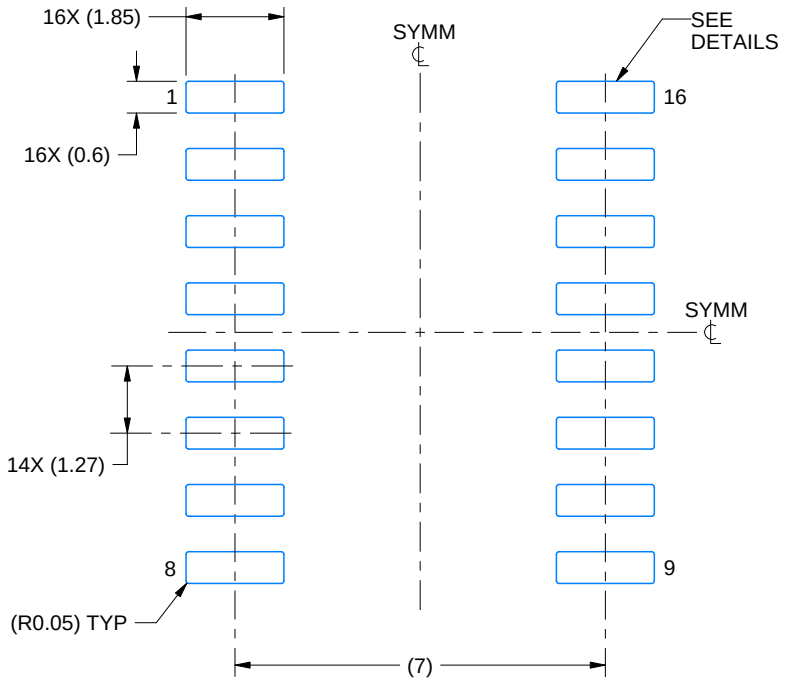


LAND PATTERN EXAMPLE
SCALE:7X

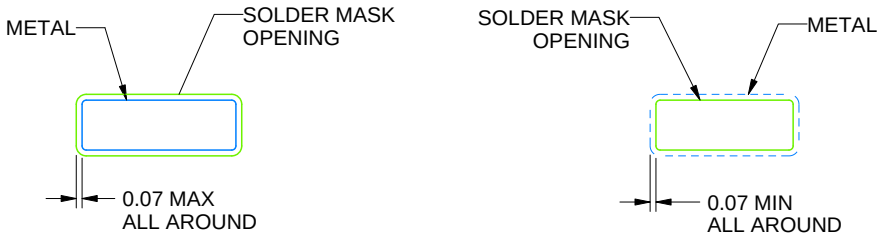


NON SOLDER MASK DEFINED

SOLDER MASK DEFINED

SOLDER MASK DETAILS

4220735/A 12/2021

NOTES: (continued)

5. Publication IPC-7351 may have alternate designs.
6. Solder mask tolerances between and around signal pads can vary based on board fabrication site.

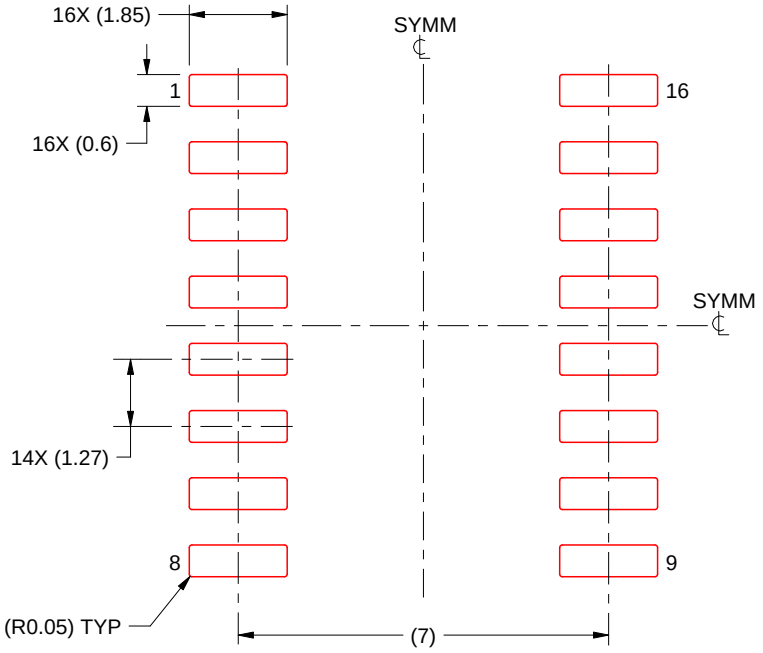


SOLDER PASTE EXAMPLE
BASED ON 0.125 mm THICK STENCIL
SCALE:7X

4220735/A 12/2021

NOTES: (continued)

7. Laser cutting apertures with trapezoidal walls and rounded corners may offer better paste release. IPC-7525 may have alternate design recommendations.
8. Board assembly site may have different recommendations for stencil design.

# IMPORTANT NOTICE AND DISCLAIMER

TI PROVIDES TECHNICAL AND RELIABILITY DATA (INCLUDING DATASHEETS), DESIGN RESOURCES (INCLUDING REFERENCE DESIGNS), APPLICATION OR OTHER DESIGN ADVICE, WEB TOOLS, SAFETY INFORMATION, AND OTHER RESOURCES “AS IS” AND WITH ALL FAULTS, AND DISCLAIMS ALL WARRANTIES, EXPRESS AND IMPLIED, INCLUDING WITHOUT LIMITATION ANY IMPLIED WARRANTIES OF MERCHANTABILITY, FITNESS FOR A PARTICULAR PURPOSE OR NON-INFRINGEMENT OF THIRD PARTY INTELLECTUAL PROPERTY RIGHTS.

These resources are intended for skilled developers designing with TI products. You are solely responsible for (1) selecting the appropriate TI products for your application, (2) designing, validating and testing your application, and (3) ensuring your application meets applicable standards, and any other safety, security, regulatory or other requirements.

These resources are subject to change without notice. TI grants you permission to use these resources only for development of an application that uses the TI products described in the resource. Other reproduction and display of these resources is prohibited. No license is granted to any other TI intellectual property right or to any third party intellectual property right. TI disclaims responsibility for, and you fully indemnify TI and its representatives against any claims, damages, costs, losses, and liabilities arising out of your use of these resources.

TI’s products are provided subject to TI’s Terms of Sale, TI’s General Quality Guidelines, or other applicable terms available either on ti.com or provided in conjunction with such TI products. TI’s provision of these resources does not expand or otherwise alter TI’s applicable warranties or warranty disclaimers for TI products. Unless TI explicitly designates a product as custom or customer-specified, TI products are standard, catalog, general purpose devices.

TI objects to and rejects any additional or different terms you may propose.

Copyright © 2026, Texas Instruments Incorporated

Last updated 10/2025