APPROVED: _____

DATE: _____ TITLE: _____

Rev	AWO #	Description	Date	Appr
-		RELEASED	12/15/21	
A		ADDED SPEC.	8/11/22	LH/TW

SPECIFICATIONS:

Material:

SMA	SMA-M	Gold
Noumenon	ABS	Black

Electrical:

Standards	4G&3G&2G&NB-IoT	
Frequency range(MHz)	698~960MHz	1710~2170MHz
Peak Gain	-4.0~3.0dBi	-0.5~3.5dBi
Average Gain(dB)	-9.5~-3.5dB	-7.7~-4.0dB
VSWR	<5.0	<10.0
Return Loss	<-3.5	<-1.5
Efficiency (%)	11.0~45.0%	17.0~40.0%
Polarization mode	Linear	
Radiation pattern	Omni-Directional	
Output impedance	50	
Max.Input Power(W)	25	

Mechanical:

Mounting Type	Connector Mount
Connector Type	SMA-Male Standard (Raight-Angle)
Antenna size(mm)	48.6Xø8mm
Material	ABS
Operating Temperature	-40°C~+85°C
Storage Temperature	-40°C~+85°C

Environmental:

Lead free, RoHS compliant.

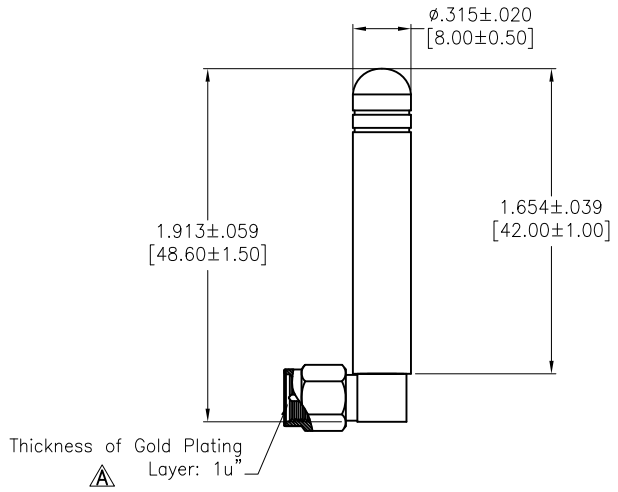

UNLESS OTHERWISE SPECIFIED ALL DIMENSIONS ARE INCHES [MM]. TOLERANCES: EXCEPT AS NOTED

INCHES		HOLES	
.X	± .10	Ø.X	±.10
.XX	± .020	Ø.XX	±.015
.XXX	± .015	Ø.XXX	±.010

DRAWN	WX	12/15/21
CHECKED	RC	12/15/21
APPROVED		

THIS DRAWING CONTAINS INFORMATION THAT IS PROPRIETARY AND SHOULD NOT BE USED WITHOUT PRIOR WRITTEN PERMISSION FROM ADAM TECH

ADAM TECH
909 Rahway Avenue,
Union, NJ 07083
Phone: 908-687-5000
Fax: 908-687-5710

TITLE: 2G 3G 4G EXTERNAL ANTENNA, RIGHT ANGLE WITH SMA MALE

SIZE	PART NO.	REV.
X	ANT-20284EB56	A

REF: S00207C | SCALE: NTS | SHEET 1 OF 1