RoHS

Single Port RJ45 Connector

AR11-3695I

- **10/100 Base-T Ethernet Application**
- **Impedance: 100OHMS**
- **RJ45 jack cavity conforms to FCC rules and regulations Part 68, SUB Part F**
- **Industrial Operating Temp: -40ºC to +85ºC**
- **Available in other Circuit Designs**
- **Optional Gold Plating Thickness**
- **Other LED Patterns available**

Electrical Specifications @ 25°C						
Part Number	OCL(uH Min) @ 100kHz, 0.1V	Turns Ratio chip: cable (±2%)	Insertion Loss (dB Max)	Return Loss (dB Min)		
	With 8mA DC Bias		1-100MHz	1-30MHz	30-60MHz	60-80MHz
AR11-3695I	350	1CT:1CT	-1.0	-18	-18-20Log(F/30MHz)	-12

Electrical Specifications @ 25°C																
Cross Talk (dB Min)					CMR (dB Min)					CDMR (dB Min)					HI-POT (Vrms)
0.5-1MHz	10MHz	30MHz	50MHz	100MHz	0.3-1MHz	10MHz	30MHz	60MHz	100MHz	0.3-1MHz	10MHz	30MHz	60MHz	100MHz	1.0mA/3Sec.
-50	-50	-40	-35	-30	-50	-47	-42	-37	-30	-50	-50	-50	-45	-40	1500

All specifications subject to change without notice.

MECHANICAL

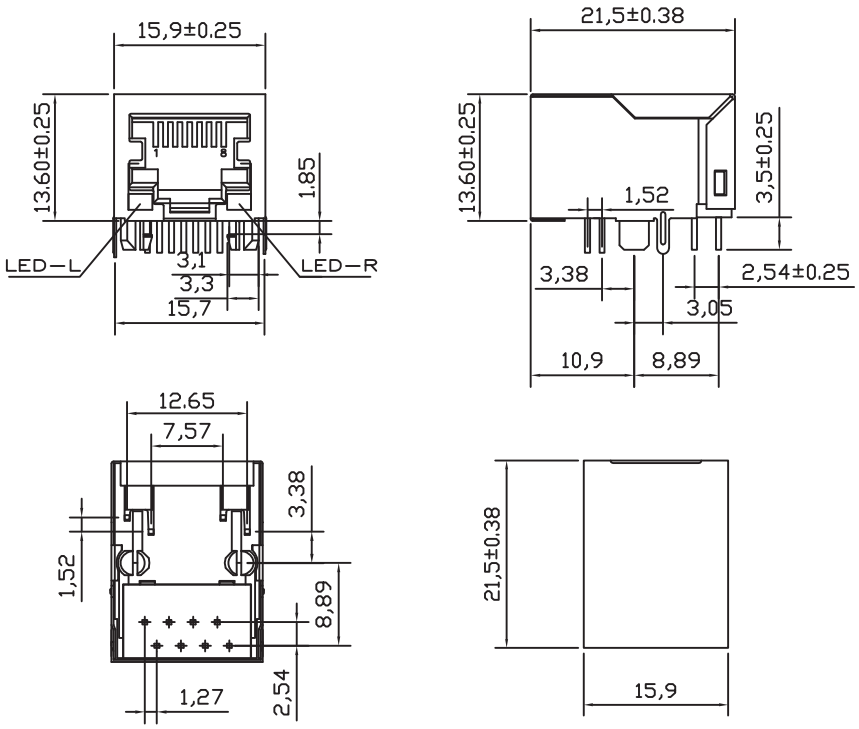

SCHEMATICS

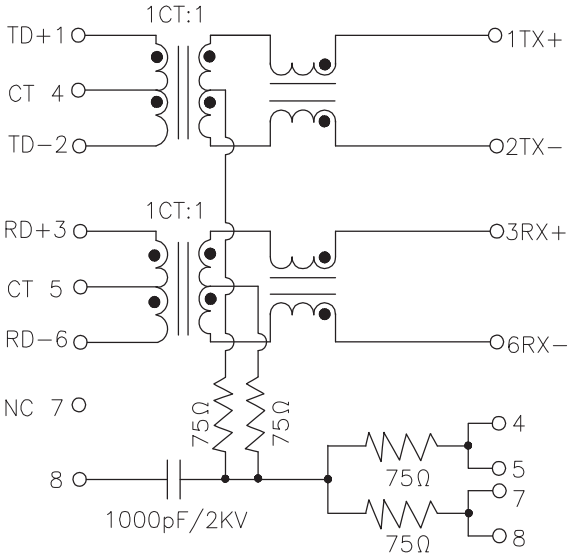



Standard LED	Wavelength	Forward*V(MAX)	TYP
Green	565nm	2.5v	2.2v
Yellow	565nm	2.5v	2.1v

With a forward current of 20mA

PCB LAYOUT

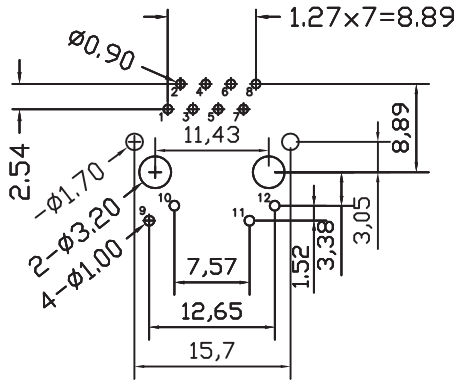

NOTES

1. Shield- 0.20mm THICKNESS BRASS C2680 H.
   PLATING NICKEL 30u"-50u"
2. Housing- Standard Material Nylon66, Glass filled
   Polyester UL94V-0 Standard Color Black.
3. RJ Terminal- Plastic: PBT GF, UL94V-0, Standard
   Color Black.
   Pin: 0.35mm Thickness Phos-Bronze C5210 EH.
   Plating: Nickel 40u"-60u" for all and Sn 100%, and
   15u" Gold Plating.
4. Input Terminal: PBT, Glass Filled, UL94V-0,
   Standard Color Black.
   Pin: 0.35mm Thickness Phos-Bronze C2680.
   Plating: Nickel 40u"-60u" for all and Sn 100%.