RoHS

SINGLE PORT RJ45

AR11-4172I

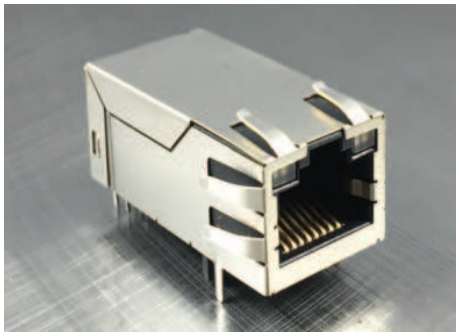

- 10/100/1000 Base-T for Ethernet Applications
- RJ45 jack cavity conforms to FCC rules and regulations Part 68, SUB Part F
- Industrial Temp: -40ºC to +85ºC
- Contact factory for Standard Operating Temp
- Other LED Patterns available

Electrical Specifications @ 25°C

OCL(µH Min) @ 100kHz, 0.1V	Turns Ratio (±2%)	Insertion Loss (dB Max)		Return Loss (dB Min)				Cross Talk (dB Min)	CMR (dB Min)	HI-POT (VAC) 1mA, 60Sec
With 8mA DC Bias		1-100MHz	100-125 MHz	1-30MHz	30-60MHz	60-80MHz	80-100MHz	1-100MHz	1-100MHz	
350	1CT:1CT	-1.0	-1.2	-18	-16	-12	-10	-30	-30	1500 AC

All specifications subject to change without notice.

MECHANICAL

Dimensions: inch (mm)

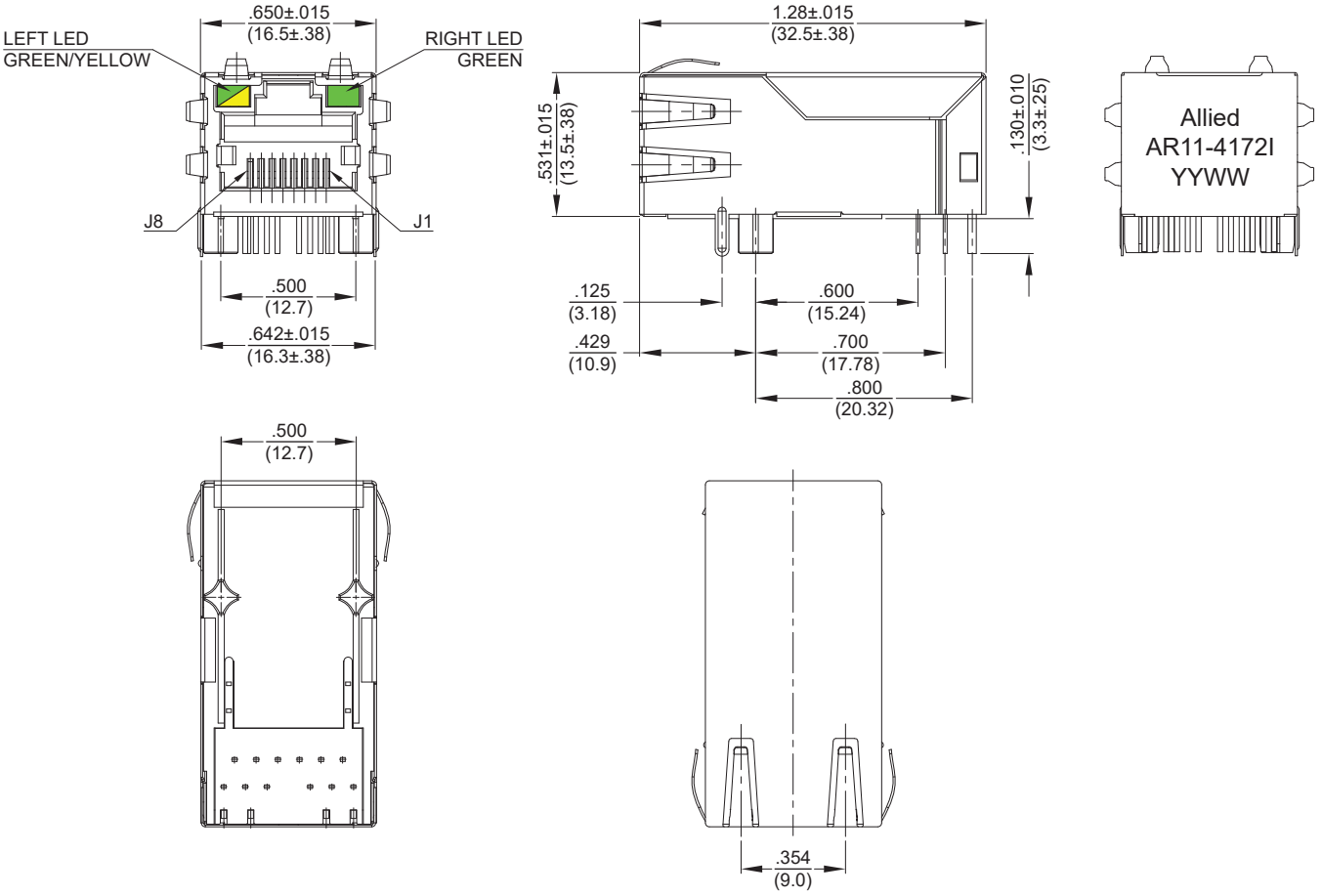

SCHEMATICS

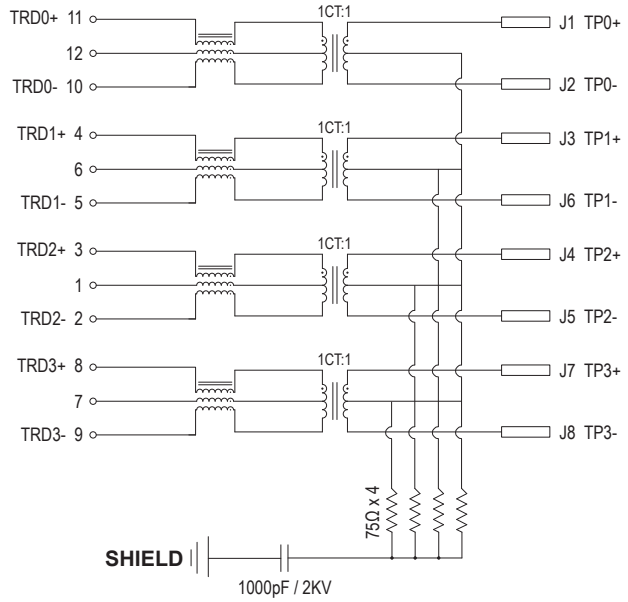

LEFT LED
16+ 15- GREEN
16- 15+ YELLOW

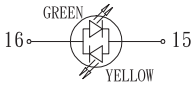

RIGHT LED
14+ 13- GREEN



PCB LAYOUT

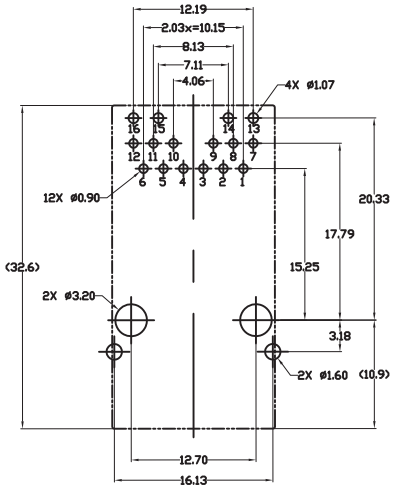

Suggested PCB Layout
All dim. tolerance are ±0.05mm.

NOTES

1. Shield- 0.20mm THICKNESS BRASS C2680 H. PLATING NICKEL 20u" Min.
2. Housing- Standard Material Nylon PA66 Glass filled Polyester UL94V-0 Standard Color Black.
3. RJ Terminal- Plastic Nylon: PA66 UL94V-0, Standard Color Black.
   Pin: 0.35mm Thickness Phos-Bronze C5210 EH.
   Plating: Nickel 40u"-60u" for all and Sn 100%, and 6u" Gold Plating.
4. Input Terminal: Plastic Nylon PA66, Glass Filled, UL94V-0, Standard Color Black.
   Pin: 0.35mm Thickness Phos-Bronze SUS430.
   Plating: Nickel 40u"-60u" for all and Sn 100%.