RoHS

Single Port RJ45 Connector

AR11-4647



- **100/1000 Base T Gigabit**
- **Designed to support applications such as LAN, ADSL Modems LOM, Ethernet, Hub and Switches**
- **Compliant with IEEE 802.3 specification**
- **Industrial Operating Temp: 0°C +70°C**

Electrical Specifications @ 25°C							
OCL(μH Min) @100KHz, 0.1V	Turns Ratio (±3%)		DCR (Ω) Max	Insertion Loss (dB) Max	Return Loss (dB Min)		
With 8mA DC Bias	TX	RX		1-100MHz	1-30MHz	30-60MHz	60-100MHz
350	1:1	1:1	1.2	-1.0	-18	-15	-12

Electrical Specifications @ 25°C					
Cross Talk (dB Min)			Common Mode Rejection (dB Min)		Hi-Pot Test
1-30MHz	30-60MHZ	60-100MHz	1-50MHz	50-150MHz	
-40	-35	-30	-30	-20	1500Vrms

All specifications subject to change without notice.

MECHANICAL

Dimensions: inch / (mm)

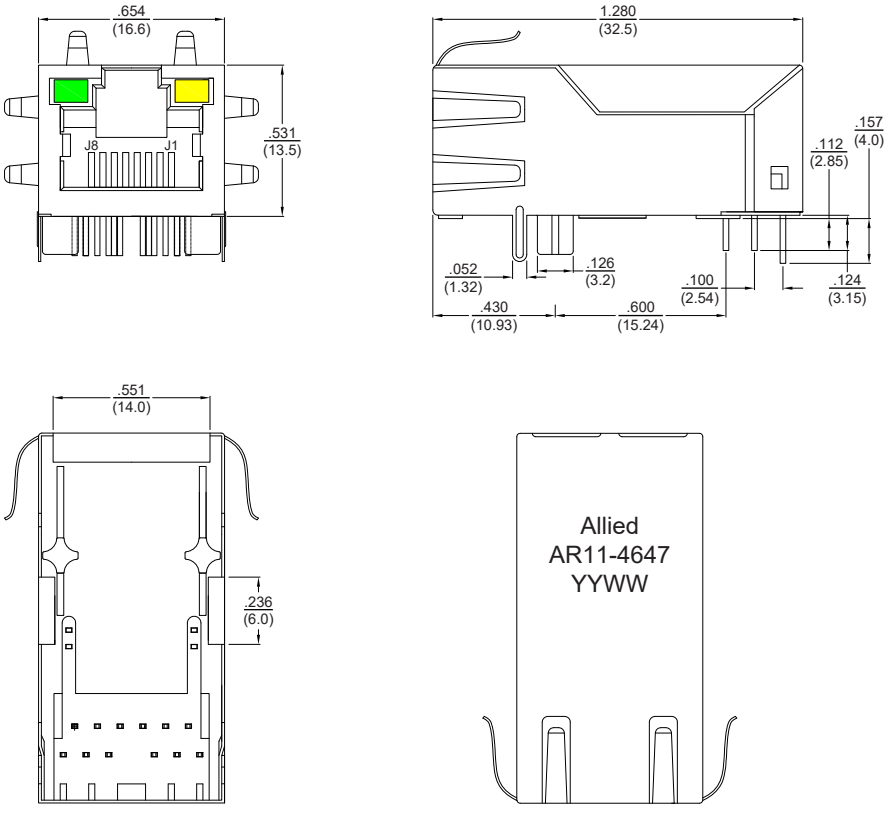

SCHEMATIC

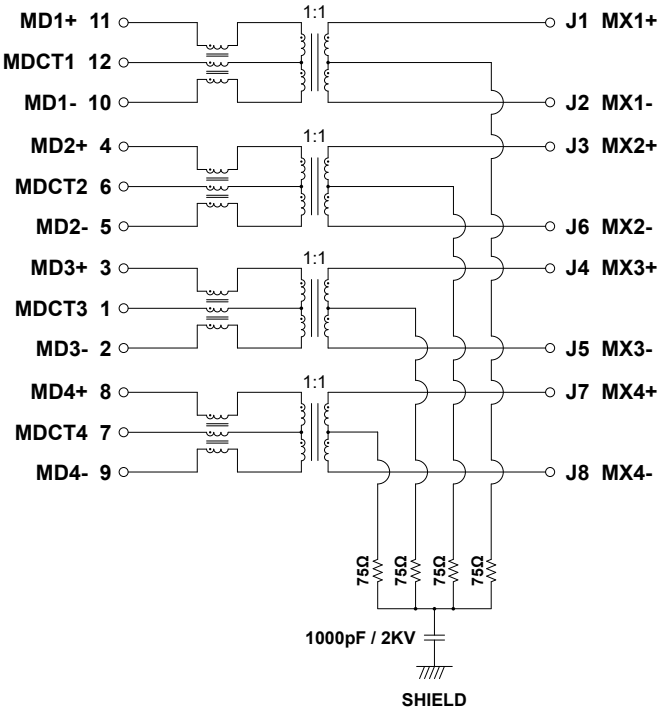

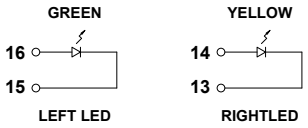

Emitting Color	λp(nm)	VF@IF=20mA	IR@VR=5V
YELLOW	585	1.8~2.4V	10μA Max
GREEN	565	1.8~2.4V	10μA Max

PCB LAYOUT

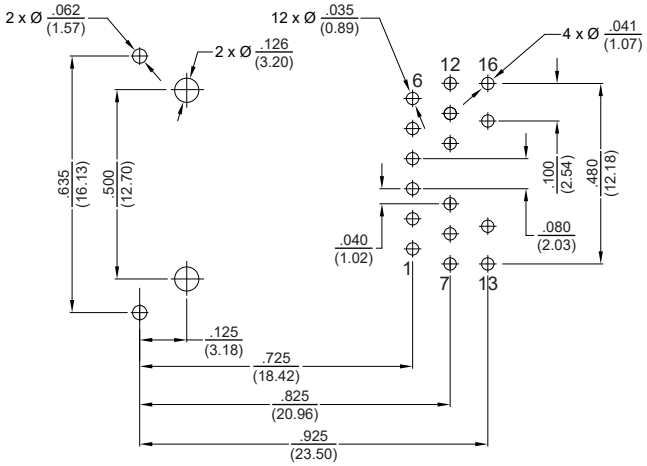

NOTES

1. Connector Materials:
   Housing: Thermosplastic UL94V-0
   Contact/Shield: Copper Alloy
   Shield Plating: Nickel
   Contact Plating: Gold 6μ" Min in contact area
2. Wave Peak Temp: 260°C Max, 5Sec.