RoHS

Single Port RJ45 Connector

AR11-4650I



- **100/1000 Base T Gigabit for LAN, WAN and other Ethernet applications**
- **Meets IEEE 802.3 specification**
- **Standard Operating Temp: -40°C +125°C**

Electrical Specifications @ 25°C			
OCL(μH Min) @100KHz, 0.1V	Turns Ratio	Return Loss (dB Min)	
With 8mA DC Bias	Pri : Sec	0.5-40MHz	40.1-100MHz
350	1CT : 1	-18	-12-20LOG(f/80)

Electrical Specifications @ 25°C					
Insertion Loss (dB Max)	Cross Talk (dB Min)		CMR (dB Min)	Hi-Pot	
0.5-100MHz	0.5-40MHz	40.1-100MHz	0.5-100MHz	Mininum	60Sec
-1.1	-35	-33-20LOG(f/50)	-30	1500Vrms	2.25KVDC

All specifications subject to change without notice.

MECHANICAL

Dimensions: inch (mm)

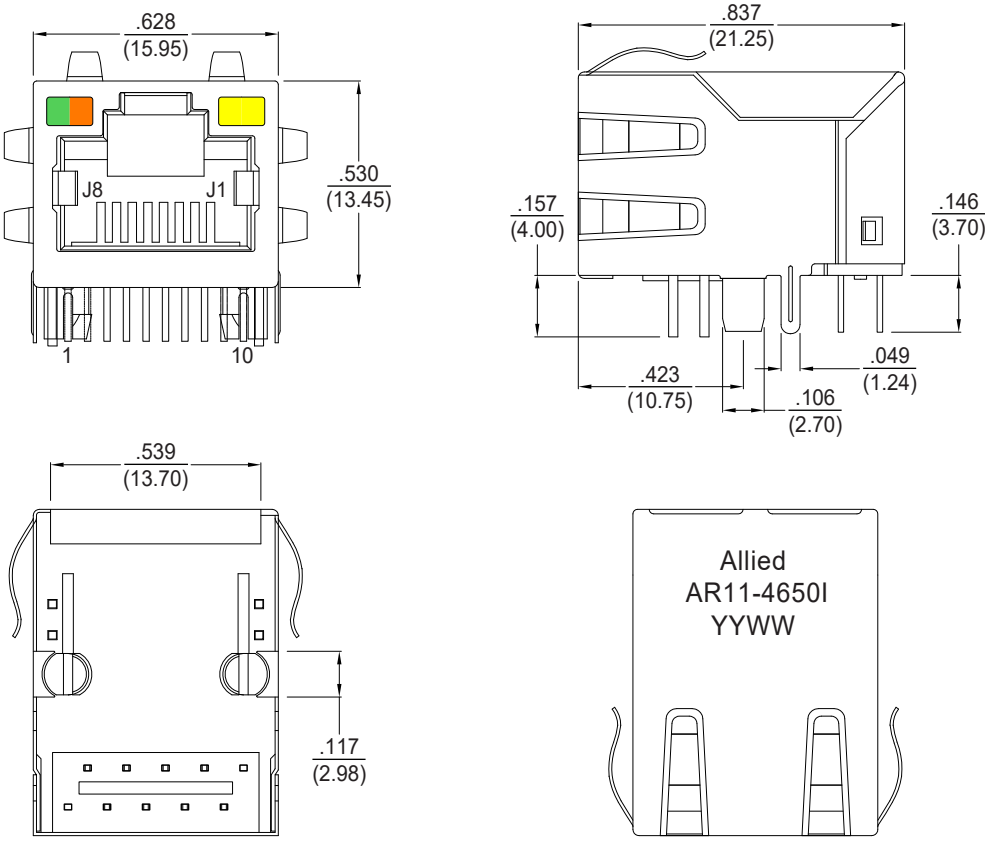

SCHEMATIC

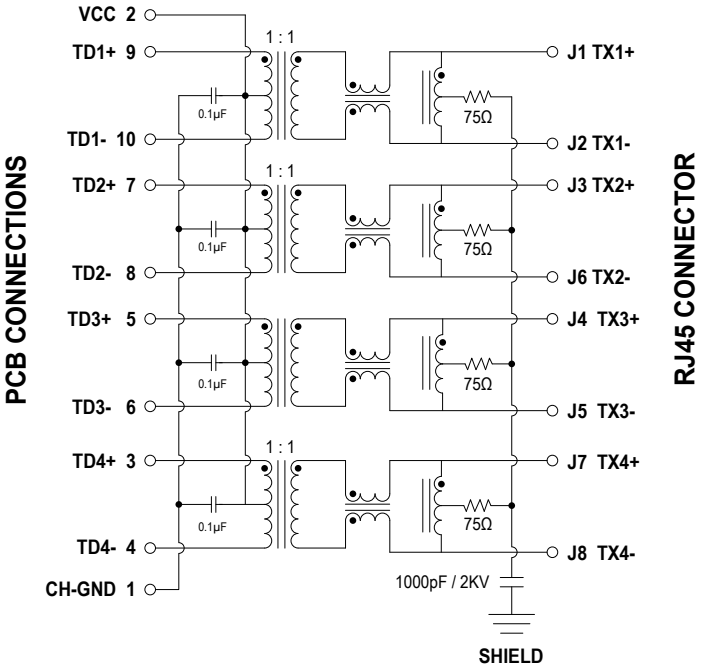

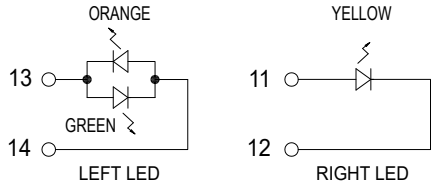

Emitting Color	λp(nm)	VF@IF=20mA	IR@VR=5V
GREEN/ORANGE	565/610	1.8-2.6V	10µA Max
YELLOW	585	1.8-2.6V	10µA Max

PCB LAYOUT

Dimensions: mm

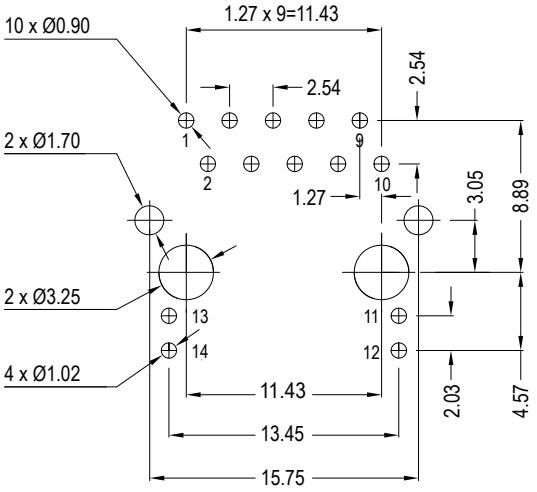

Tolerance is ±0.2mm unless otherwise specified

NOTES

1. **Connector Materials:**
   Housing: Thermoplastic PBT+30% G.F. UL94V-0
   Contact: Phosphor Bronze C5210R-EH Thickness = 0.35mm
   Pins: Brass C2680R-H Thickness = 0.35mm
   Shield: SUS 201-1/2H Thickness = 0.20mm
   Contact Plating: Gold 6µ" min. in contact area
2. **Wave solder peak temperature:** 265°C max, 5 sec. max