REVISION D

NOTES:
1. **.342 STACKER HEIGHT NOT AVAILABLE AS STANDARD.**
2. Ⓒ REPRESENTS A CRITICAL DIMENSION.
3. MAXIMUM BURR ALLOWANCE: .0015[0.038]
4. MINIMUM PUSHOUT FORCE: SIGNAL: .5 LB, GROUND: 1 LB
5. MAXIMUM VARIANCE: .002[0.05]
6. DIMENSION APPLIES TO CONTACTS & GROUND PLANES.
7. GROUND PLANE PRESS HEIGHT MUST BE .003[0.08] LESS THAN THE MAXIMUM HEIGHT OR .001[0.03] GREATER THAN THE MINIMUM HEIGHT OF THE TERMINAL.
8. PARTS TO BE PACKAGED IN TRAYS.

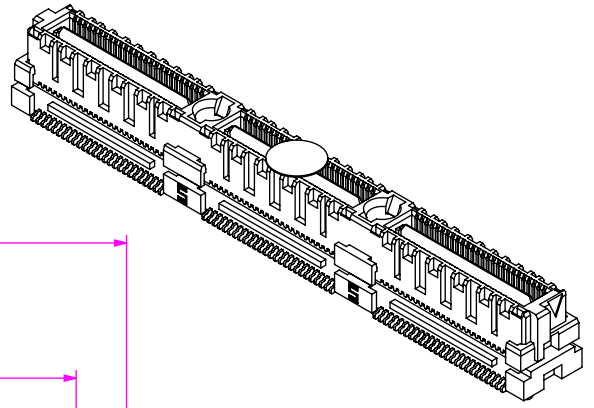

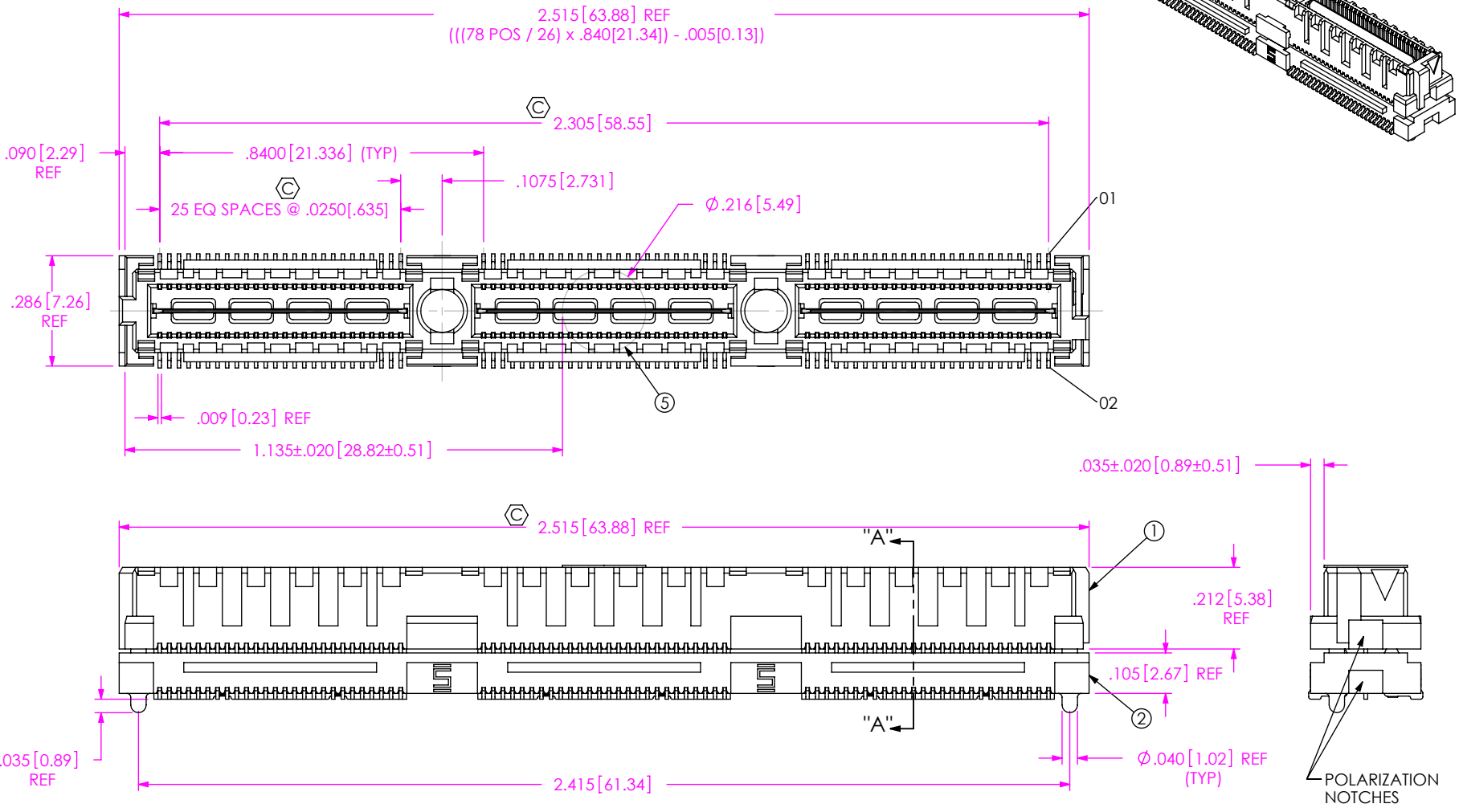

BY SIGNING THIS DOCUMENT YOU ARE ACCEPTING THE CONDITIONS SET WITHIN. YOUR REQUIREMENTS MUST BE LISTED WITHIN THIS DRAWING. WHERE NO DIRECTION FROM THE CUSTOMER IS IDENTIFIED SAMTEC'S PROCESS REQUIREMENTS WILL BE USED.

DATE: _____
COMPANY: _____
CUSTOMER SIGNATURE: _____
PRINTED NAME: _____
PHONE No: _____
EXCEPTIONS: _____

ITEM NO.	PART NUMBER	QUANTITY	MATERIAL
1	QMSS-26-05.75-D-03	1.0000	VECTRA E130i, COLOR: BLACK
2	ASP-129634-03-B	1.0000	VECTRA E130i, COLOR: BLACK
3	ASP-129635-02-P-S	156.00	PHOS BRONZE, 521 EXTRA SPRING TEMPER
4	ASP-129636-02-P-L	3.0000	PHOS BRONZE, 510 FULL HARD TEMPER
5	K-500-300	1.0000	POLYIMIDE FILM
6	TY-ASP090	.01786	ANTI-STATIC BLACK HIPS

UNLESS OTHERWISE SPECIFIED, DIMENSIONS ARE IN INCHES.
TOLERANCES ARE:
DECIMALS
.XX: ±.01[0.3]
.XXX: ±.005[0.13]
.XXXX: ±.0020[0.051]
ANGLES
2 °

* PROPRIETARY NOTE *
THIS DOCUMENT CONTAINS CONFIDENTIAL AND PROPRIETARY INFORMATION AND ALL DESIGN, MANUFACTURING, REPRODUCTION, USE, PATENT RIGHTS AND SALES RIGHTS ARE EXPRESSLY RESERVED BY SAMTEC, INC. THIS DOCUMENT SHALL NOT BE DISCLOSED, IN WHOLE OR PART, TO ANY UNAUTHORIZED PERSON OR ENTITY NOR REPRODUCED, TRANSFERRED OR INCORPORATED IN ANY OTHER PROJECT IN ANY MANNER WITHOUT THE EXPRESS WRITTEN CONSENT OF SAMTEC, INC.

DO NOT SCALE DRAWING
SHEET SCALE: 2.5:1

PLATING:
CONTACT AREA: .000030 GOLD OVER .000050 NICKEL
REMAINDER: .000200 REF TIN OVER .000050 NICKEL

F:\DWG\MISC\MKTG\ASP-129637-03-MKT.SLDDRW

samtec
520 PARK EAST BLVD, NEW ALBANY, IN 47150
PHONE: 812-944-6733 FAX: 812-948-5047
e-Mail: info@SAMTEC.com code: 55322

DESCRIPTION: ELEVATED QMS ASSM

DWG. NO. ASP-129637-03

BY: D FRALEY 02/14/2007 SHEET 1 OF 2

REVISION D

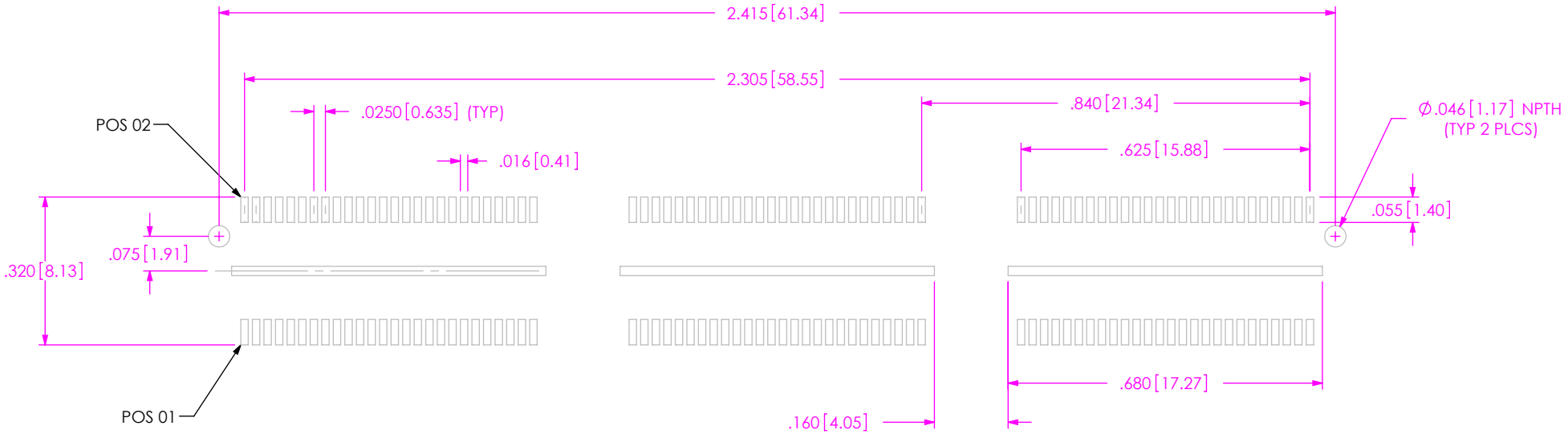

RECOMMENDED PCB LAYOUT

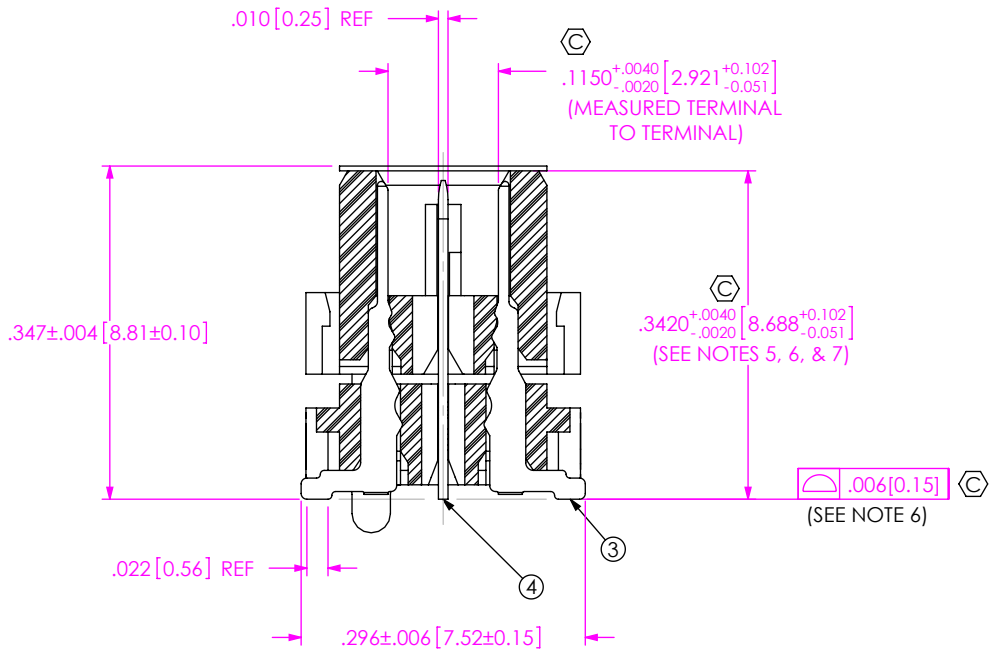

SECTION "A"-"A"
SCALE 5 : 1

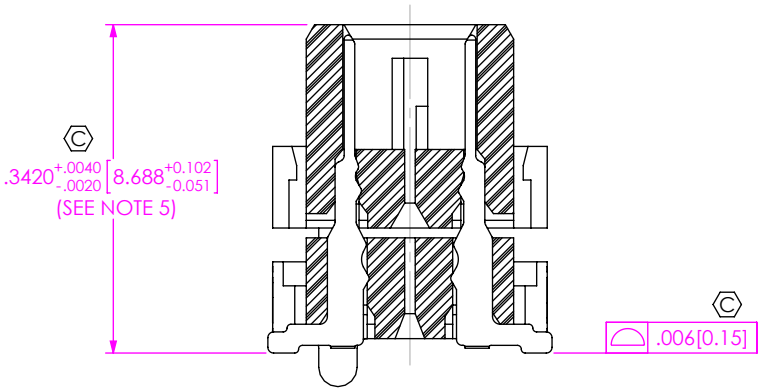

IN-PROCESS

* PROPRIETARY NOTE *

THIS DOCUMENT CONTAINS CONFIDENTIAL AND PROPRIETARY INFORMATION AND ALL DESIGN, MANUFACTURING, REPRODUCTION, USE, PATENT RIGHTS AND SALES RIGHTS ARE EXPRESSLY RESERVED BY SAMTEC, INC. THIS DOCUMENT SHALL NOT BE DISCLOSED, IN WHOLE OR PART, TO ANY UNAUTHORIZED PERSON OR ENTITY NOR REPRODUCED, TRANSFERRED OR INCORPORATED IN ANY OTHER PROJECT IN ANY MANNER WITHOUT THE EXPRESS WRITTEN CONSENT OF SAMTEC, INC.

520 PARK EAST BLVD, NEW ALBANY, IN 47150
PHONE: 812-944-6733 FAX: 812-948-5047
e-Mail: info@SAMTEC.com code: 55322

SHEET SCALE: 5:1

DESCRIPTION: ELEVATED QMS ASSM

DWG. NO. ASP-129637-03

F:\DWG\MISC\MKTG\ASP-129637-03-MKT.SLDDRW

BY: D FRALEY 02/14/2007 SHEET 2 OF 2