REVISION J

DO NOT SCALE FROM THIS PRINT

NOTES:
1. **VITA 57 CONNECTOR.**
2. ⟨C⟩ REPRESENTS A CRITICAL DIMENSION.
3. MINIMUM PUSHOUT FORCE: .75 LBS.
4. PARTS TO BE PACKAGED IN TAPE AND REEL.
5. NOTE DELETED.
6. DIMENSION C10 MUST BE MEASURED USING INSPECTION FIXTURE AT-1817-836-1,USE CO-AU-WI-2003-M FOR PROCESS.
7. ATTACH LABEL "SEAX-0001" TO EACH TAPE & REEL PACKAGE.
8. MAXIMUM ROW TO ROW VARIATION .003[0.08].

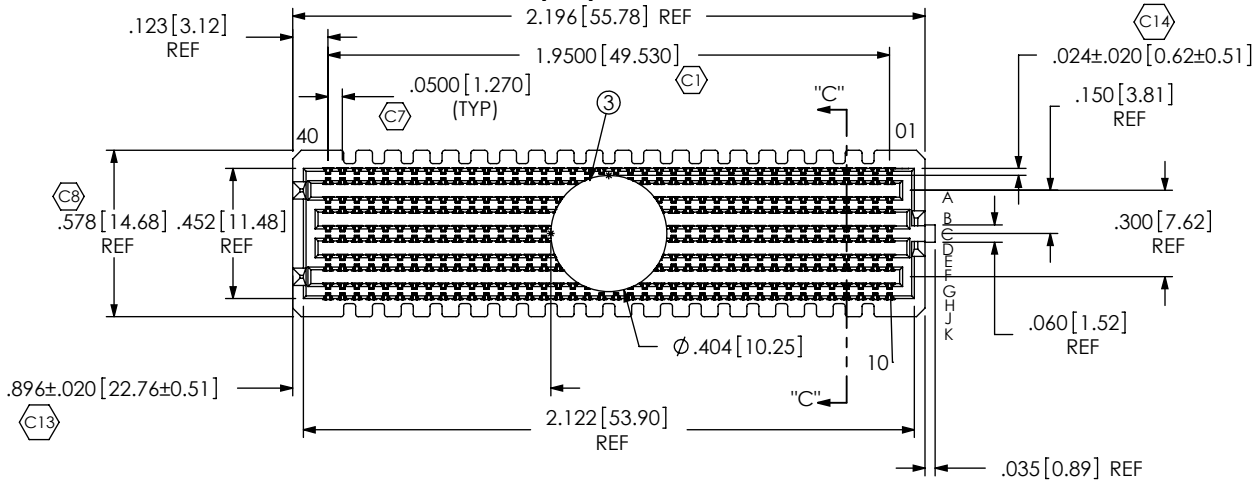


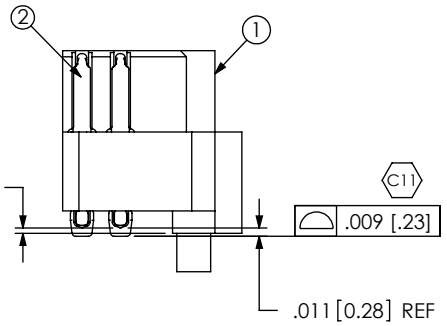


DETAIL 'A'
SCALE 4 : 1

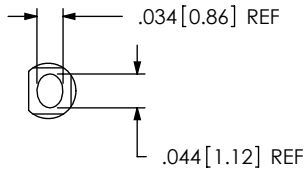


DETAIL 'B'
SCALE 4 : 1

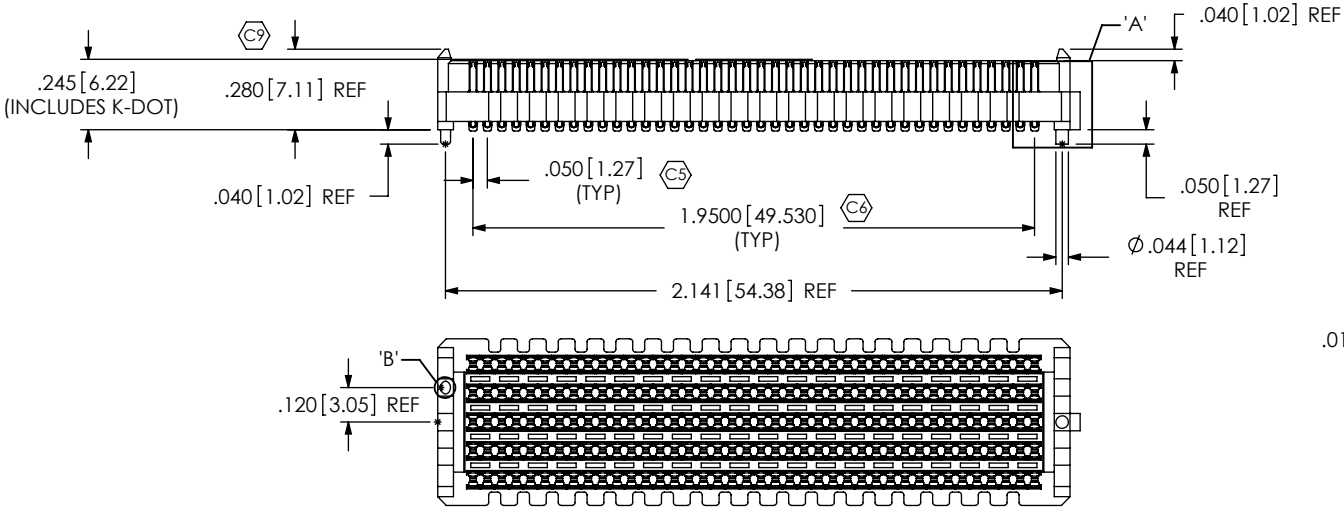


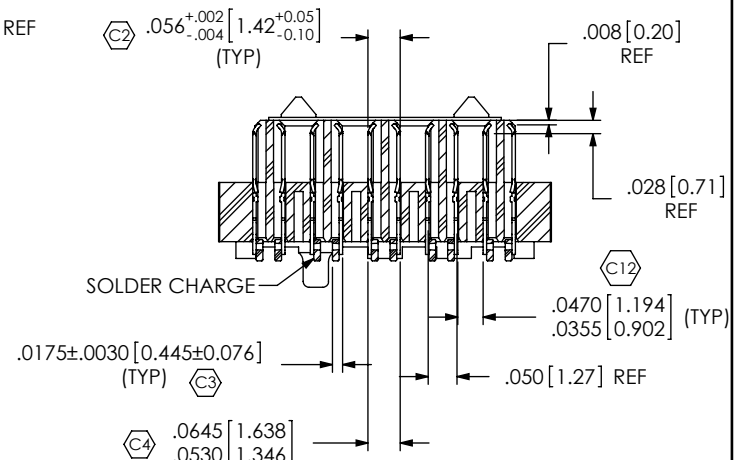


SECTION "C"-"C"
SCALE 3 : 1

| ITEM NO. | PART NUMBER | QUANTITY | MATERIAL |
|---|---|---|---|
| 1 | SEAM-40-03.5-10-A | 1.0000 | LCP, UL 94 V0, COLOR: BLACK |
| 2 | NEW-SUB-T-1M36-03.5-S-2 | 400.00 | COPPER ALLOY / LEAD FREE SOLDER |
| 3 | K-DOT-.404-.500-.005 | 1.0000 | POLYIMIDE FILM |
| 4 | CT-SEAM033MS | 1.0000 | CONDUCTIVE POLYMER |

UNLESS OTHERWISE SPECIFIED, DIMENSIONS ARE IN INCHES.
TOLERANCES ARE:
DECIMALS
.XX: ±.01[.3]
.XXX: ±.005[.13]
.XXXX: ±.0020[.051]
ANGLES
2 °

PROPRIETARY NOTE
THIS DOCUMENT CONTAINS INFORMATION CONFIDENTIAL AND PROPRIETARY TO SAMTEC, INC. AND SHALL NOT BE REPRODUCED OR TRANSFERRED TO OTHER DOCUMENTS OR DISCLOSED TO OTHERS OR USED FOR ANY PURPOSE OTHER THAN THAT WHICH IT WAS OBTAINED WITHOUT THE EXPRESSED WRITTEN CONSENT OF SAMTEC, INC.

samtec
520 PARK EAST BLVD, NEW ALBANY, IN 47150
PHONE: 812-944-6733 FAX: 812-948-5047
e-Mail: info@SAMTEC.com code: 55322

DO NOT SCALE DRAWING
SHEET SCALE: 1.5:1

PLATING:
CONTACT AREA: .000030 GOLD OVER .000050 NICKEL
REMAINDER: .000200 REF TIN OVER .000050 NICKEL

F:\DWG\MISC\MKTG\ASP-134488-01-MKT.SLDDRW

DESCRIPTION:
.050 PITCH TERMINAL ARRAY ASSEMBLY

DWG. NO.
ASP-134488-01

BY: G. PURVIS 11/02/2007

# RECOMMENDED PCB LAYOUT FOR ASP-134488-01

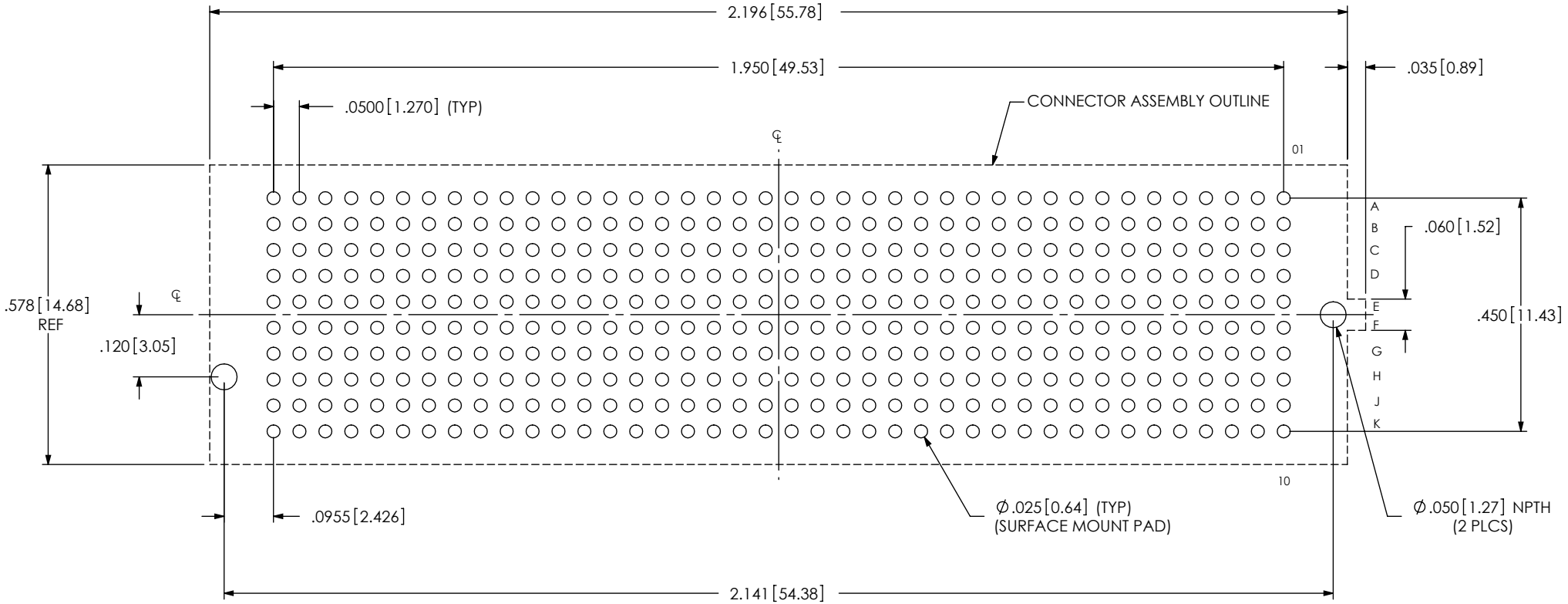


ALL DIMENSIONS ARE SYMMETRIC ABOUT THE CENTERLINE.

PROPRIETARY NOTE

THIS DOCUMENT CONTAINS INFORMATION CONFIDENTIAL AND PROPRIETARY TO SAMTEC, INC. AND SHALL NOT BE REPRODUCED OR TRANSFERRED TO OTHER DOCUMENTS OR DISCLOSED TO OTHERS OR USED FOR ANY PURPOSE OTHER THAN THAT WHICH IT WAS OBTAINED WITHOUT THE EXPRESSED WRITTEN CONSENT OF SAMTEC, INC.

520 PARK EAST BLVD, NEW ALBANY, IN 47150
PHONE: 812-944-6733 FAX: 812-948-5047
e-Mail: info@SAMTEC.com code: 55322

F:\DWG\MISC\MKTG\ASP-134488-01-MKT.SLDDRW

# RECOMMENDED STENCIL LAYOUT FOR ASP-134488-01

NOTES:
STENCIL TO BE .0060[.152] THICK.

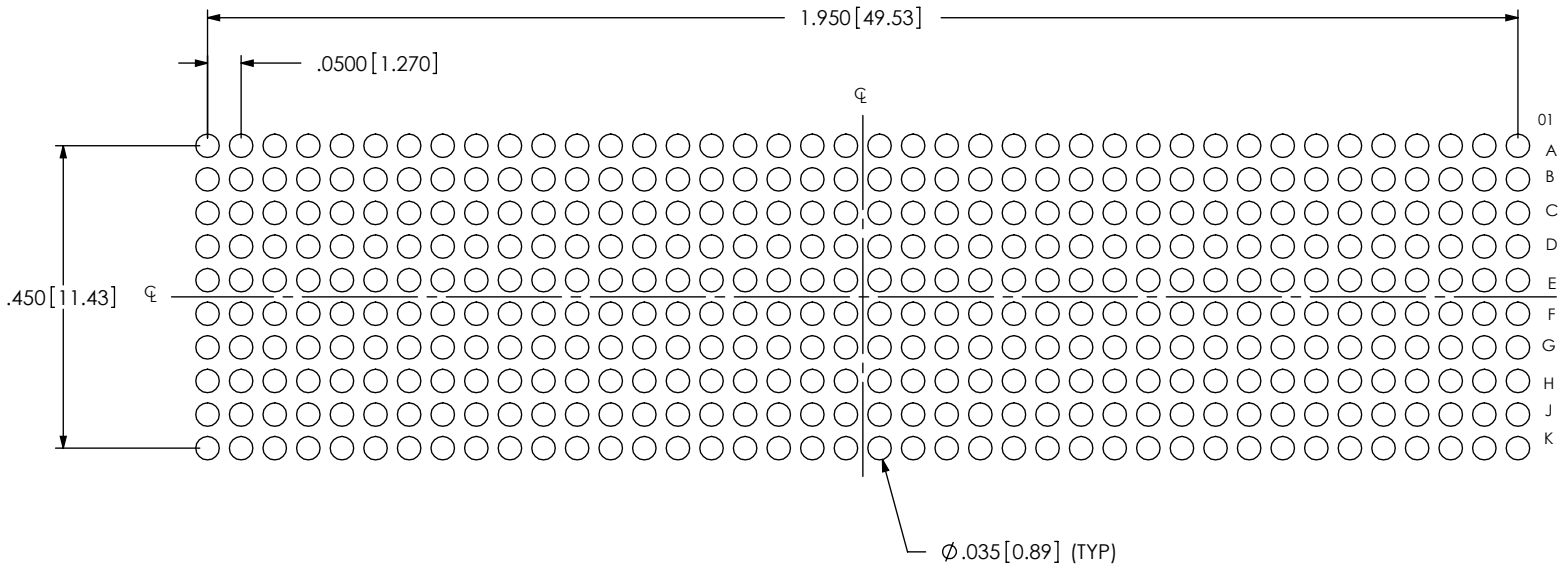


ALL DIMENSIONS ARE SYMMETRIC ABOUT THE CENTERLINE.

PROPRIETARY NOTE
THIS DOCUMENT CONTAINS INFORMATION CONFIDENTIAL AND PROPRIETARY TO SAMTEC, INC. AND SHALL NOT BE REPRODUCED OR TRANSFERRED TO OTHER DOCUMENTS OR DISCLOSED TO OTHERS OR USED FOR ANY PURPOSE OTHER THAN THAT WHICH IT WAS OBTAINED WITHOUT THE EXPRESSED WRITTEN CONSENT OF SAMTEC, INC.

520 PARK EAST BLVD, NEW ALBANY, IN 47150
PHONE: 812-944-6733 FAX: 812-948-5047
e-Mail: info@SAMTEC.com code: 55322

F:\DWG\MISC\MKTG\ASP-134488-01-MKT.SLDDRW

ASP-134488-01

REVISION J

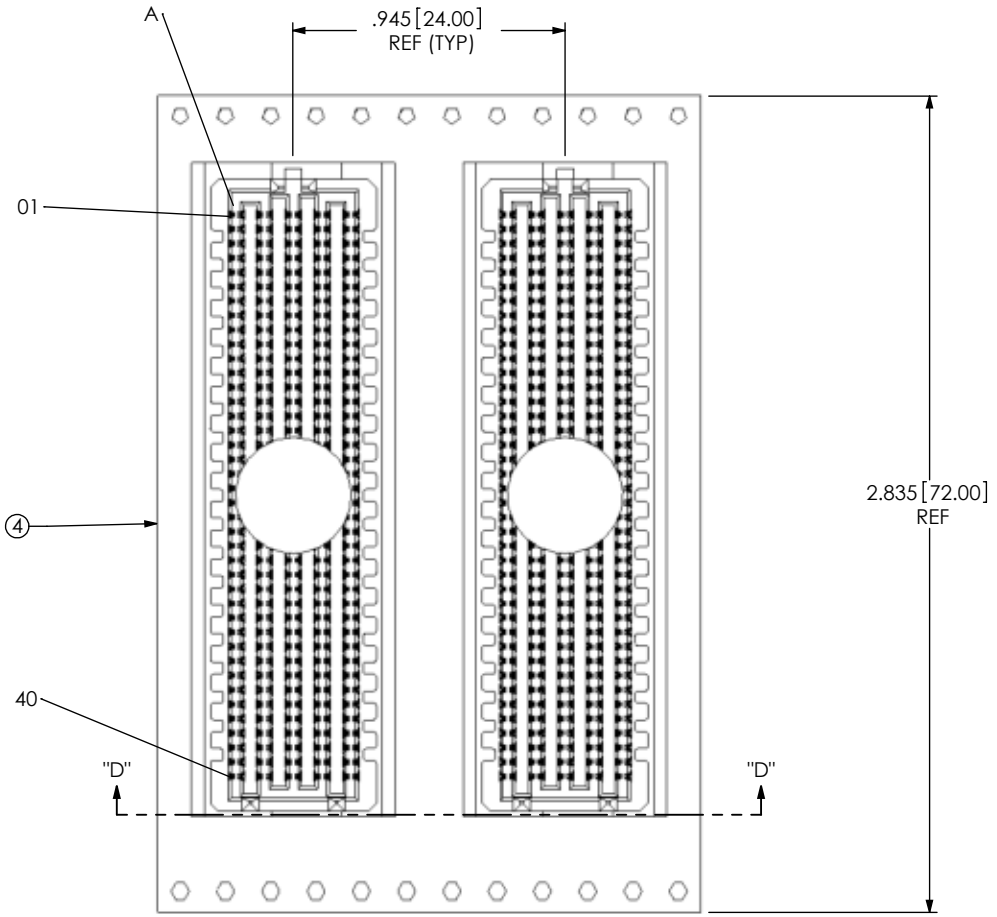


USER DIRECTION OF UN-REELING
POCKET NOT DETAILED

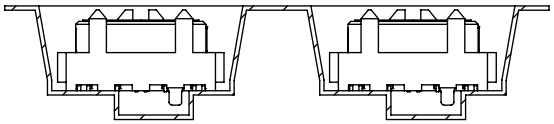

SECTION "D"-"D"

PACKAGING VIEW

PROPRIETARY NOTE

THIS DOCUMENT CONTAINS INFORMATION CONFIDENTIAL AND PROPRIETARY TO SAMTEC, INC. AND SHALL NOT BE REPRODUCED OR TRANSFERRED TO OTHER DOCUMENTS OR DISCLOSED TO OTHERS OR USED FOR ANY PURPOSE OTHER THAN THAT WHICH IT WAS OBTAINED WITHOUT THE EXPRESSED WRITTEN CONSENT OF SAMTEC, INC.

520 PARK EAST BLVD, NEW ALBANY, IN 47150
PHONE: 812-944-6733 FAX: 812-948-5047
e-Mail: info@SAMTEC.com code: 55322

SHEET SCALE: 1.5:1

DESCRIPTION: .050 PITCH TERMINAL ARRAY ASSEMBLY

DWG. NO. ASP-134488-01

F:\DWG\MISC\MKTG\ASP-134488-01-MKT.SLDDRW

BY: G. PURVIS 11/02/2007