REVISION D

DO NOT SCALE FROM THIS PRINT

NOTES:
1. **STANDARD PART SET UP AS ASP.**
   LIKE PART: SEAM-40-02.0-STL-14-1-A-K-TR
2. REPRESENTS A CRITICAL DIMENSION.
3. MINIMUM PUSHOUT FORCE: 0.50 LBS.
4. MEASURED FIRST & LAST POSITIONS ONLY, ALL ROWS.
5. DIMENSION MUST BE MEASURED IN THE FOUR OUTSIDE CORNERS USING INSPECTION FIXTURE AT-1817-836-2, USE CO-AU-WI-2003-M FOR PROCESS.
6. PARTS TO BE PACKAGED IN TAPE & REEL.
   ATTACH LABEL "SEAX-0001" TO EACH TAPE & REEL PACKAGE.
7. FOR QUANTITIES UP TO 49 PIECES, NO LEADER, TRAILER, OR REEL WILL BE SUPPLIED.
   FOR QUANTITIES 50-124, NO LEADER OR TRAILER WILL BE SUPPLIED.
8. ORDERS WILL BE PACKAGED ACCORDING TO THE SAMTEC PACKAGING EFFICIENCY STANDARDS (SPES) FOUND ON WWW.SAMTEC.COM.

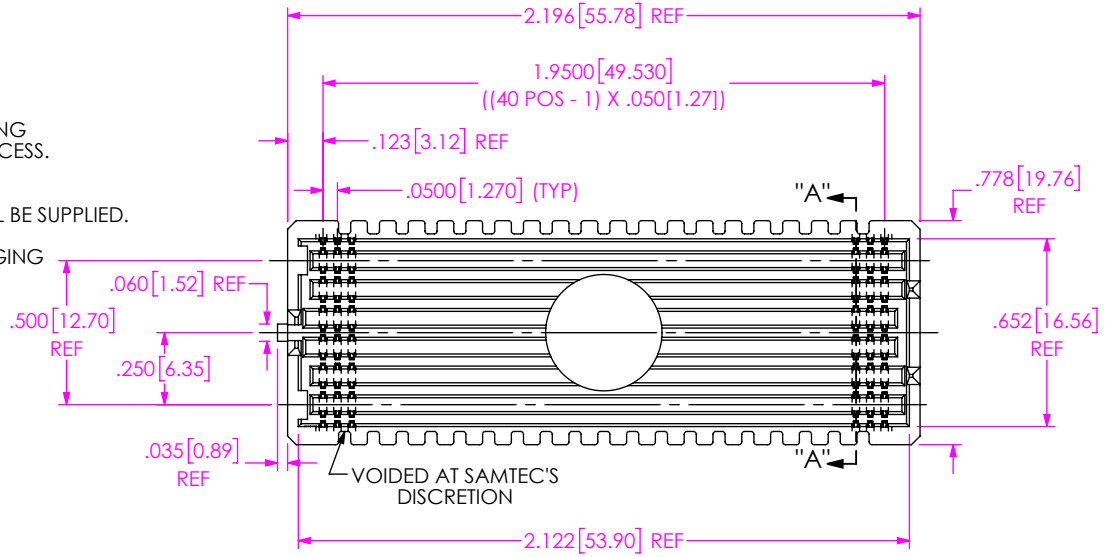

SOME CENTER FEATURES NOT SHOWN FOR CLARITY

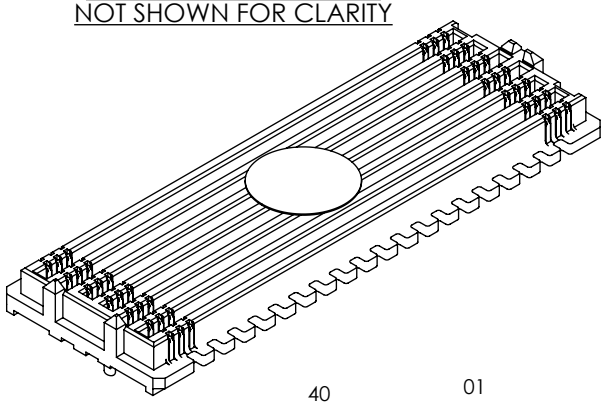

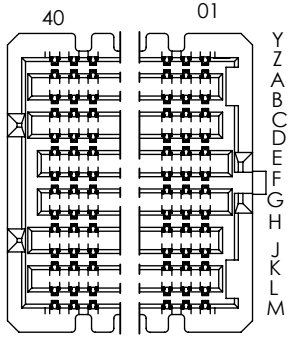

-14 ROW DETAIL

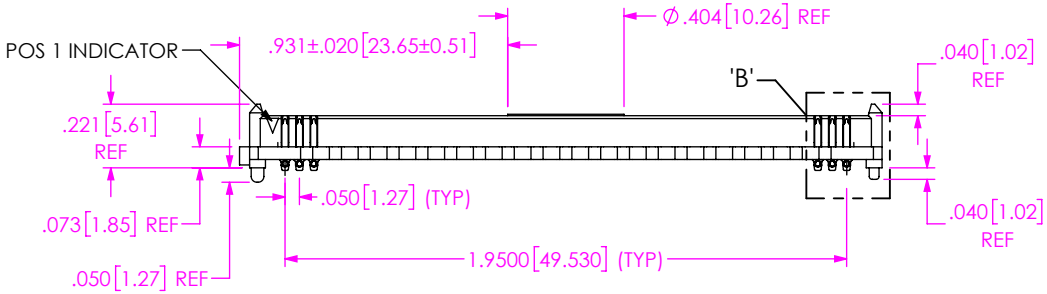

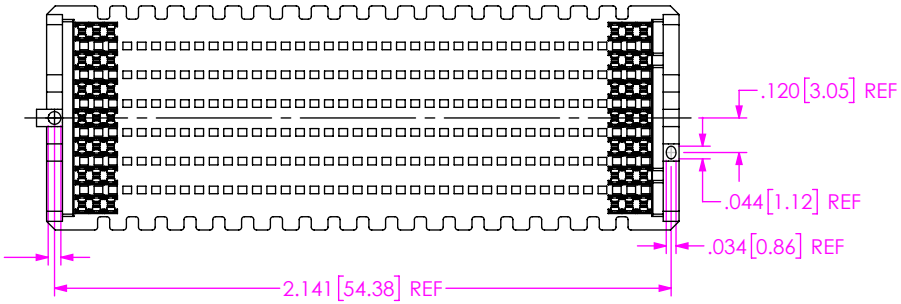

BY SIGNING THIS DOCUMENT YOU ARE ACCEPTING THE CONDITIONS SET WITHIN. YOUR REQUIREMENTS MUST BE LISTED WITHIN THIS DRAWING. WHERE NO DIRECTION FROM THE CUSTOMER IS IDENTIFIED SAMTEC'S PROCESS REQUIREMENTS WILL BE USED.

DATE: _____
COMPANY: _____
CUSTOMER SIGNATURE: _____
PRINTED NAME: _____
PHONE No: _____
EXCEPTIONS: _____

ITEM NO.	PART NUMBER	QUANTITY	MATERIAL
1	SEAM-40-02.0-14-A	1.0000	LCP, UL 94 VO, COLOR: BLACK
2	NEW-SUB-T-1M36-02.0-STL-1	560.00	COPPER ALLOY / LEADED SOLDER
3	K-DOT-.404-.500-.005	1.0000	POLYMIDE FILM
4	CT-SEAM185MS	.00571	CONDUCTIVE POLYMER

UNLESS OTHERWISE SPECIFIED, DIMENSIONS ARE IN INCHES.
TOLERANCES ARE:
DECIMALS
.XX: ±.01 [0.3]
.XXX: ±.005 [0.13]
.XXXX: ±.0020 [0.051]
ANGLES
2°

PROPRIETARY NOTE
THIS DOCUMENT CONTAINS CONFIDENTIAL AND PROPRIETARY INFORMATION AND ALL DESIGN, MANUFACTURING, REPRODUCTION, USE, PATENT RIGHTS AND SALES RIGHTS ARE EXPRESSLY RESERVED BY SAMTEC, INC. THIS DOCUMENT SHALL NOT BE DISCLOSED, IN WHOLE OR PART, TO ANY UNAUTHORIZED PERSON OR ENTITY NOR REPRODUCED, TRANSFERRED OR INCORPORATED IN ANY OTHER PROJECT IN ANY MANNER WITHOUT THE EXPRESS WRITTEN CONSENT OF SAMTEC, INC.

DO NOT SCALE DRAWING
SHEET SCALE: 3:2

PLATING:
CONTACT AREA: .000030 GOLD OVER .000050 NICKEL
REMAINDER: .000200 REF TIN/LEAD (90/10) OVER .000050 NICKEL

SOLDER COMP: 63% TIN / 37% LEAD

c:\enterprisevault\DWG\MISC\MKTG\ASP-208521-01-MKT.SLDDRW

520 PARK EAST BLVD, NEW ALBANY, IN 47150
PHONE: 812-944-6733 FAX: 812-948-5047
e-Mail info@SAMTEC.com code 55322

DESCRIPTION:
MODIFIED SEAM ASSEMBLY

DWG. NO.
ASP-208521-01

BY: J. BROWNING 01/21/2019 SHEET 1 OF 4

REVISION D

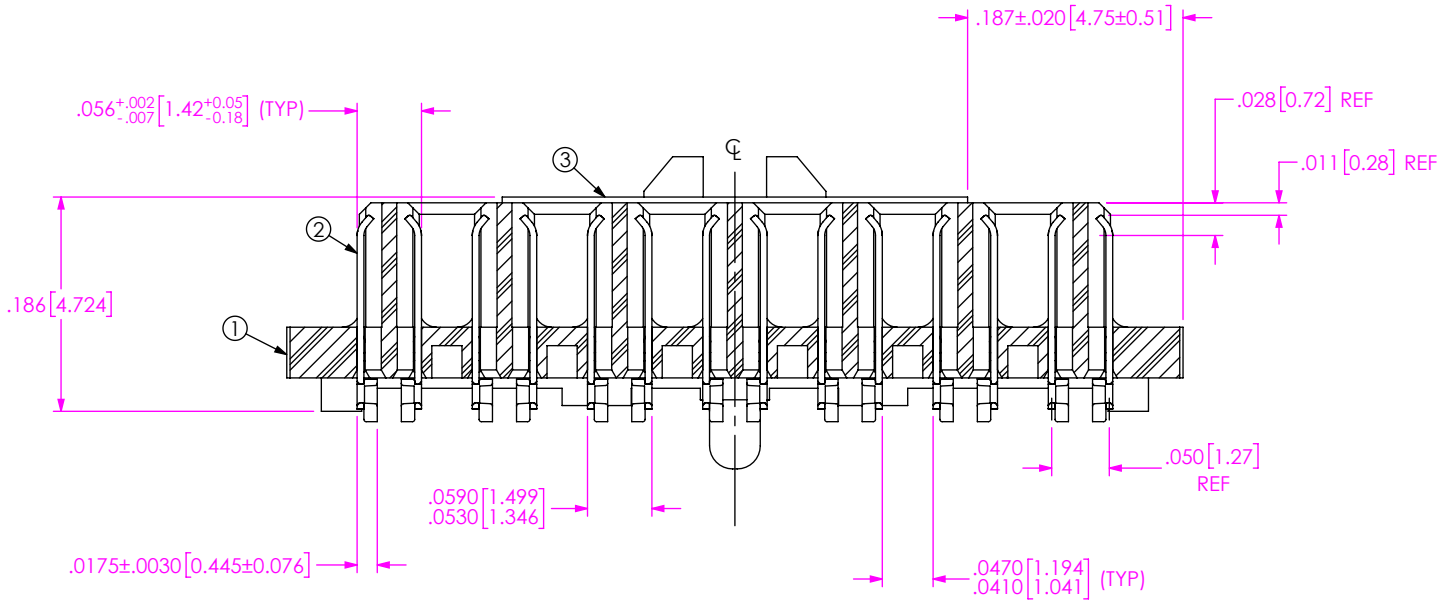

SECTION "A"-"A"
SCALE 6 : 1

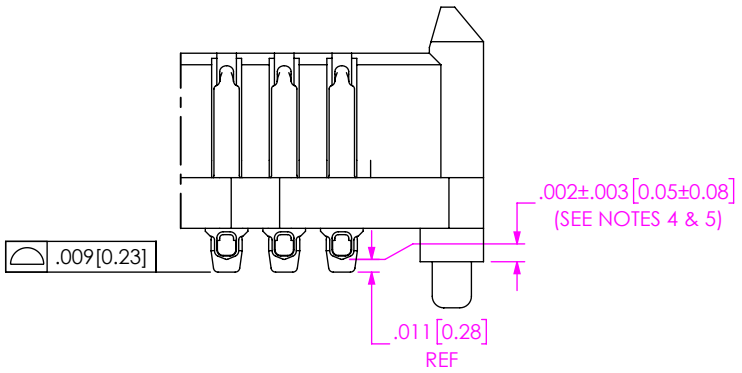

DETAIL 'B'
SCALE 6 : 1

* PROPRIETARY NOTE *

THIS DOCUMENT CONTAINS CONFIDENTIAL AND PROPRIETARY INFORMATION AND ALL DESIGN, MANUFACTURING, REPRODUCTION, USE, PATENT RIGHTS AND SALES RIGHTS ARE EXPRESSLY RESERVED BY SAMTEC, INC. THIS DOCUMENT SHALL NOT BE DISCLOSED, IN WHOLE OR PART, TO ANY UNAUTHORIZED PERSON OR ENTITY NOR REPRODUCED, TRANSFERRED OR INCORPORATED IN ANY OTHER PROJECT IN ANY MANNER WITHOUT THE EXPRESS WRITTEN CONSENT OF SAMTEC, INC.

DO NOT SCALE DRAWING

SHEET SCALE: 2:1

520 PARK EAST BLVD, NEW ALBANY, IN 47150
PHONE: 812-944-6733 FAX: 812-948-5047
e-Mail info@SAMTEC.com code 55322

DESCRIPTION:
MODIFIED SEAM ASSEMBLY

DWG. NO.
ASP-208521-01

c:\enterprisevault\DWG\MISC\MKTG\ASP-208521-01-MKT.SLDDRW

BY: J. BROWNING 01/21/2019

REVISION D

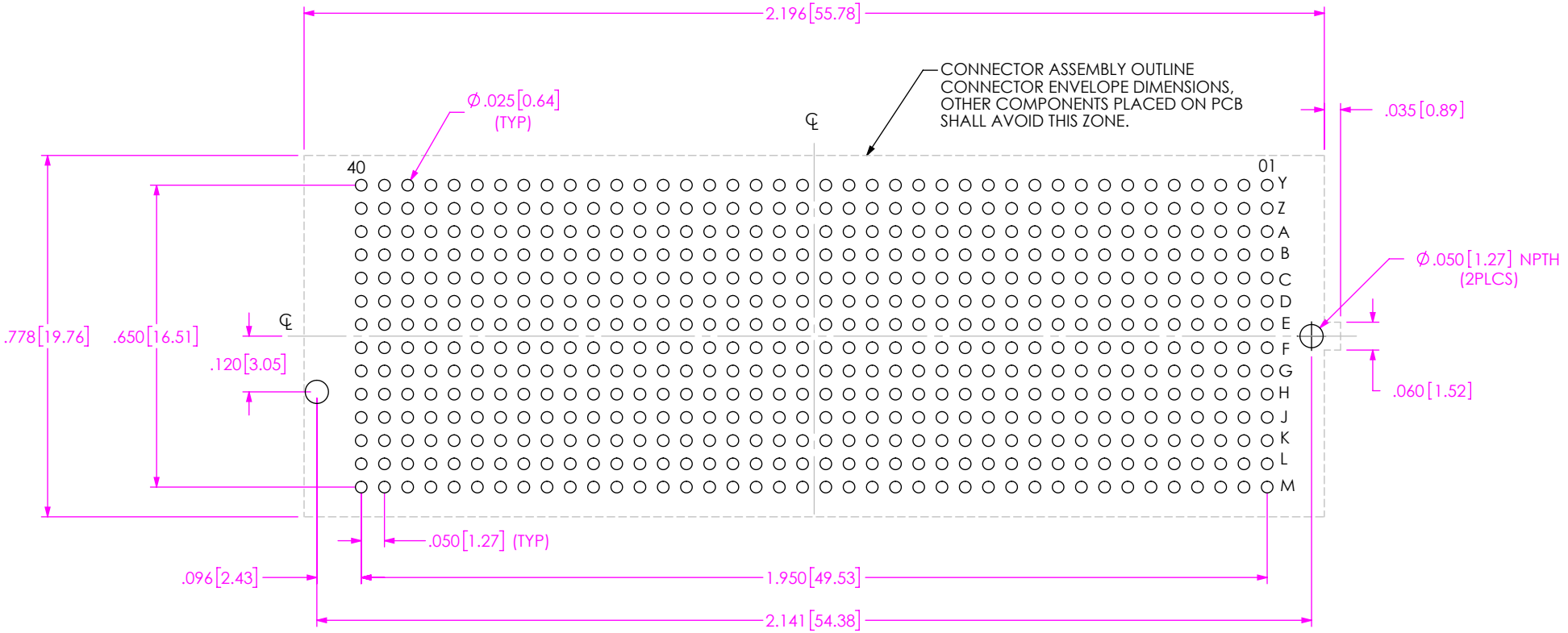

RECOMMENDED PCB LAYOUT

ALL DIMENSIONS ARE SYMMETRIC ABOUT THE CENTERLINE

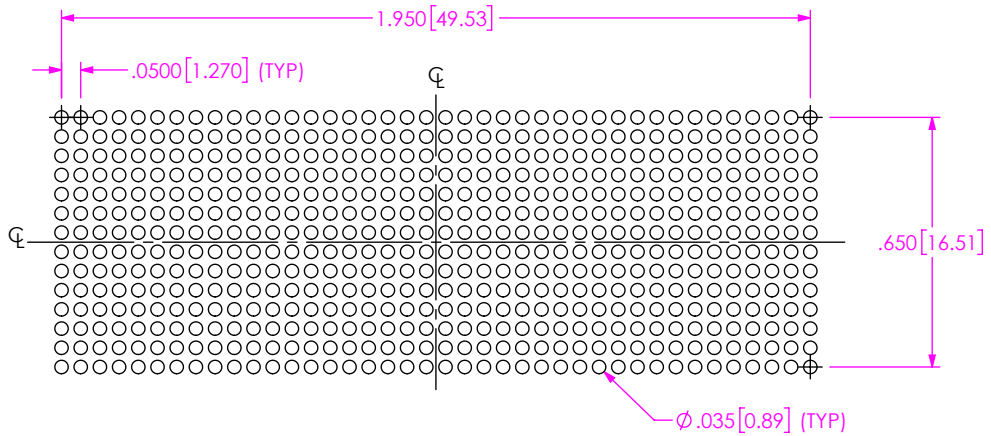

RECOMMENDED STENCIL LAYOUT

ALL DIMENSIONS ARE SYMMETRIC ABOUT THE CENTERLINE

STENCIL TO BE .0060[0.152] THICK

* PROPRIETARY NOTE *

THIS DOCUMENT CONTAINS CONFIDENTIAL AND PROPRIETARY INFORMATION AND ALL DESIGN, MANUFACTURING, REPRODUCTION, USE, PATENT RIGHTS AND SALES RIGHTS ARE EXPRESSLY RESERVED BY SAMTEC, INC. THIS DOCUMENT SHALL NOT BE DISCLOSED, IN WHOLE OR PART, TO ANY UNAUTHORIZED PERSON OR ENTITY NOR REPRODUCED, TRANSFERRED OR INCORPORATED IN ANY OTHER PROJECT IN ANY MANNER WITHOUT THE EXPRESS WRITTEN CONSENT OF SAMTEC, INC.

520 PARK EAST BLVD, NEW ALBANY, IN 47150
PHONE: 812-944-6733 FAX: 812-948-5047
e-Mail info@SAMTEC.com code 55322

SHEET SCALE: 3:1

DESCRIPTION: MODIFIED SEAM ASSEMBLY

DWG. NO. ASP-208521-01

c:\enterprisevault\DWG\MISC\MKTG\ASP-208521-01-MKT.SLDDRW

BY: J. BROWNING 01/21/2019 SHEET 3 OF 4

REVISION D

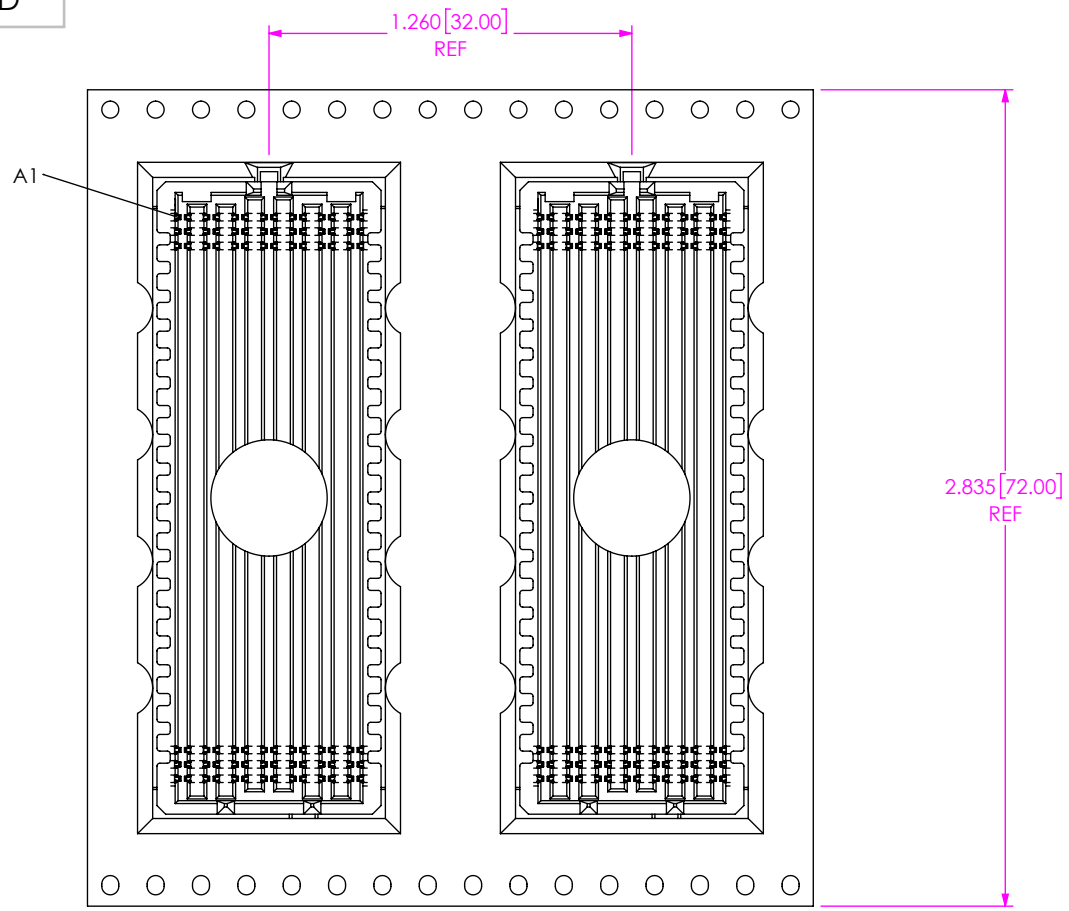

PACKAGING VIEW

* PROPRIETARY NOTE *
THIS DOCUMENT CONTAINS CONFIDENTIAL AND PROPRIETARY INFORMATION AND ALL DESIGN, MANUFACTURING, REPRODUCTION, USE, PATENT RIGHTS AND SALES RIGHTS ARE EXPRESSLY RESERVED BY SAMTEC, INC. THIS DOCUMENT SHALL NOT BE DISCLOSED, IN WHOLE OR PART, TO ANY UNAUTHORIZED PERSON OR ENTITY NOR REPRODUCED, TRANSFERRED OR INCORPORATED IN ANY OTHER PROJECT IN ANY MANNER WITHOUT THE EXPRESS WRITTEN CONSENT OF SAMTEC, INC.

520 PARK EAST BLVD, NEW ALBANY, IN 47150
PHONE: 812-944-6733 FAX: 812-948-5047
e-Mail info@SAMTEC.com code 55322

SHEET SCALE: 3:1

DESCRIPTION: MODIFIED SEAM ASSEMBLY

DWG. NO. ASP-208521-01

BY: J. BROWNING 01/21/2019 SHEET 4 OF 4

c:\enterprisevault\DWG\MISC\MKTG\ASP-208521-01-MKT.SLDDRW