REVISION A

DO NOT SCALE FROM THIS PRINT

NOTES:
1. **VITA 57.4 CONNECTOR NOT AVAILABLE AS STANDARD.**
2. Ⓒ REPRESENTS A CRITICAL DIMENSION.
3. MINIMUM PUSHOUT FORCE: 0.50 LBS.
4. MEASURE USING INSPECTION FIXTURE AT-1817-836-2. USE CO-AU-WI-2003-M FOR PROCESS.
5. MAXIMUM ROW TO ROW VARIATION .003[0.08], MEASURED FIRST & LAST POSITIONS ONLY, ALL ROWS.
6. Ⓒ NON-FUNCTIONAL VOIDING IN PLASTIC BODY TO BE AT SAMTEC'S DISCRETION.
7. MEASURE FIRST & LAST POSITIONS ONLY, ALL ROWS.
8. PART TO BE PACKAGED IN TAPE AND REEL. ATTACH LABEL "SEAX-0001" TO EACH TAPE & REEL PACKAGE.
9. FOR QUANTITIES UP TO 49 PIECES, NO LEADER, TRAILER, OR REEL WILL BE SUPPLIED. FOR QUANTITIES 50-124, NO LEADER OR TRAILER WILL BE SUPPLIED SPLICES MAY BE PRESENT.

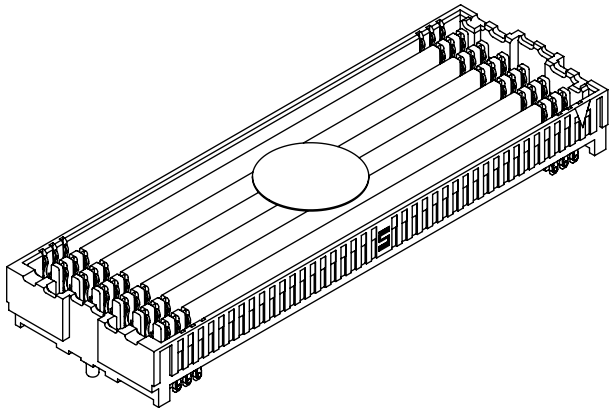

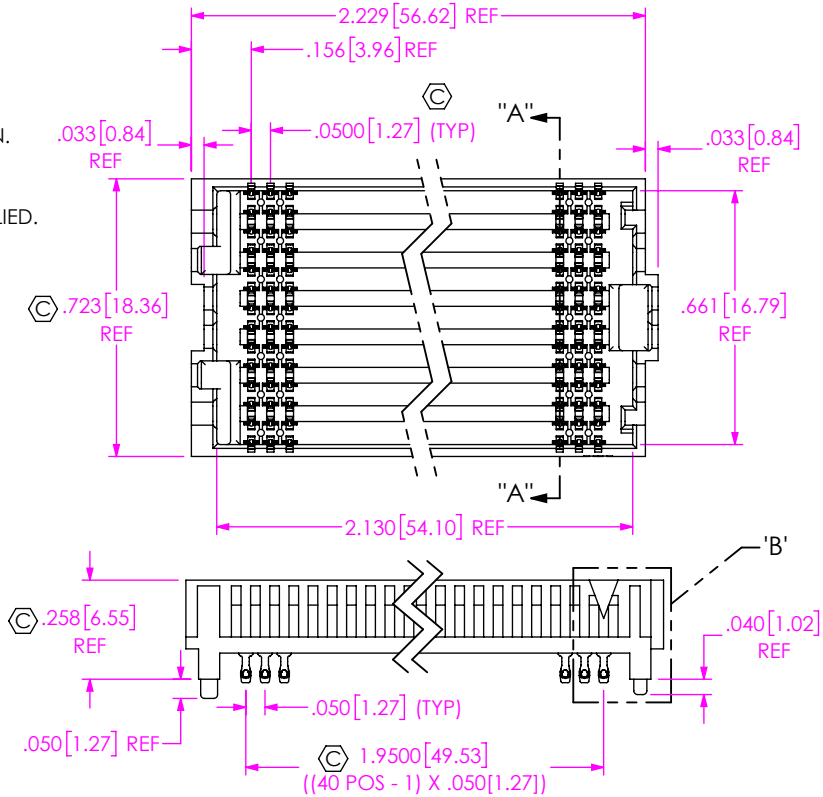

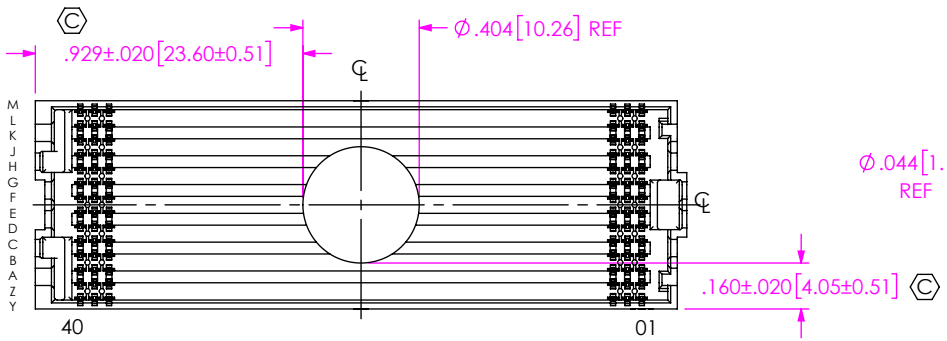

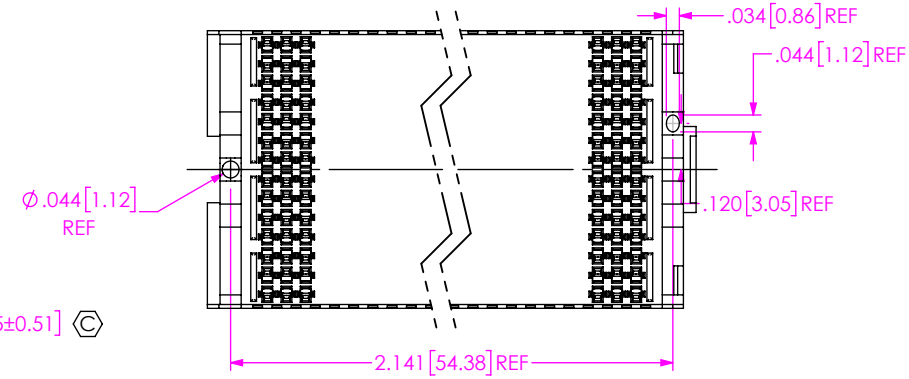

PAD & VITA 57.4 DETAIL

ITEM NO.	PART NUMBER	QUANTITY	MATERIAL	
1	SEAF-40-06.5-14-A	1.0000	LCP, UL 94 V0, COLOR: BLACK	
2	NEW-SUB-C-209-06.5-STL-1	560.00	COPPER ALLOY/LEADED SOLDER	Ⓒ
3	K-DOT-.404-.500-.005	1.0000	POLYIMIDE FILM	
4	CT-SEAF133MS	.00667	CONDUCTIVE POLYMER	

UNLESS OTHERWISE SPECIFIED, DIMENSIONS ARE IN INCHES.
TOLERANCES ARE:
DECIMALS
.XX: ±.01 [0.3]
.XXX: ±.005 [0.13]
.XXXX: ±.0020 [0.051]
ANGLES
2°

* PROPRIETARY NOTE *
THIS DOCUMENT CONTAINS CONFIDENTIAL AND PROPRIETARY INFORMATION AND ALL DESIGN, MANUFACTURING, REPRODUCTION, USE, PATENT RIGHTS AND SALES RIGHTS ARE EXPRESSLY RESERVED BY SAMTEC, INC. THIS DOCUMENT SHALL NOT BE DISCLOSED, IN WHOLE OR PART, TO ANY UNAUTHORIZED PERSON OR ENTITY NOR REPRODUCED, TRANSFERRED OR INCORPORATED IN ANY OTHER PROJECT IN ANY MANNER WITHOUT THE EXPRESS WRITTEN CONSENT OF SAMTEC, INC.

DO NOT SCALE DRAWING
SHEET SCALE: 2:1

PLATING:
CONTACT AREA: .000030 REF GOLD OVER .000050 NICKEL
REMAINDER: .000200 REF TIN/LEAD (90/10) OVER .000050 NICKEL
SOLDER COMPOSITON: 63% TIN/37% LEAD CHARGE TAIL

F:\dwg\misc\mktg\ASP-208573-01-MKT.SLDDRW

samtec
520 PARK EAST BLVD, NEW ALBANY, IN 47150
PHONE: 812-944-6733 FAX: 812-948-5047
e-Mail info@SAMTEC.com code 55322

DESCRIPTION:
14 ROW .050 PITCH SOCKET ARRAY ASM

DWG. NO.
ASP-208573-01

BY: J. BROWNING 10/16/2018 SHEET 1 OF 4

REVISION A

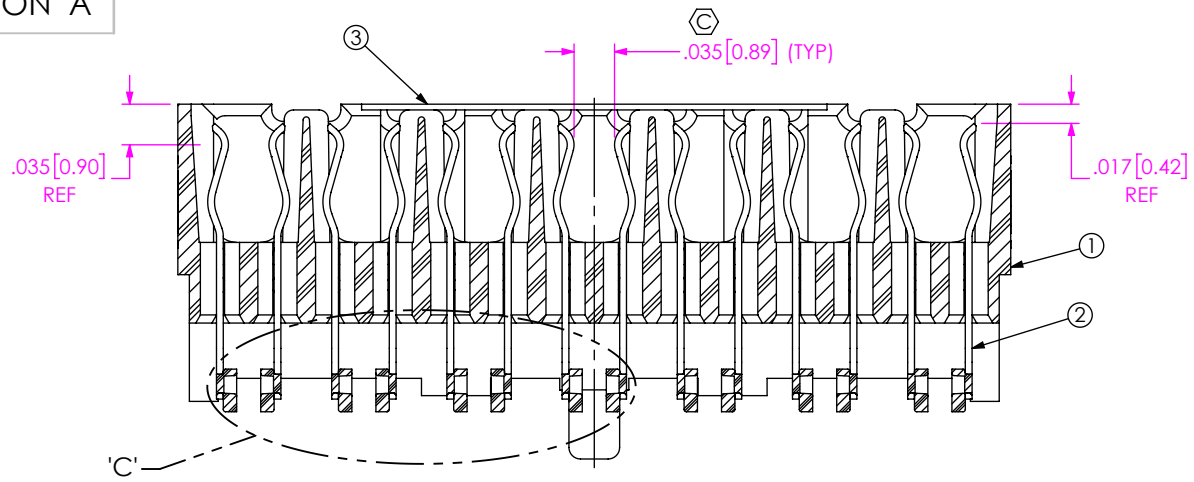

SECTION "A"-"A"
SCALE 6 : 1

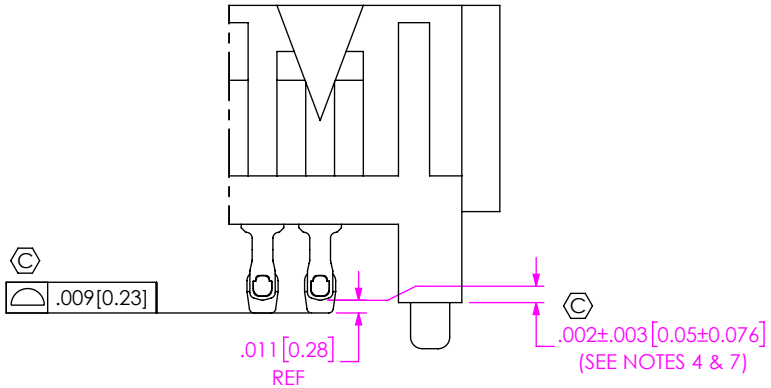

DETAIL 'B'
SCALE 6 : 1

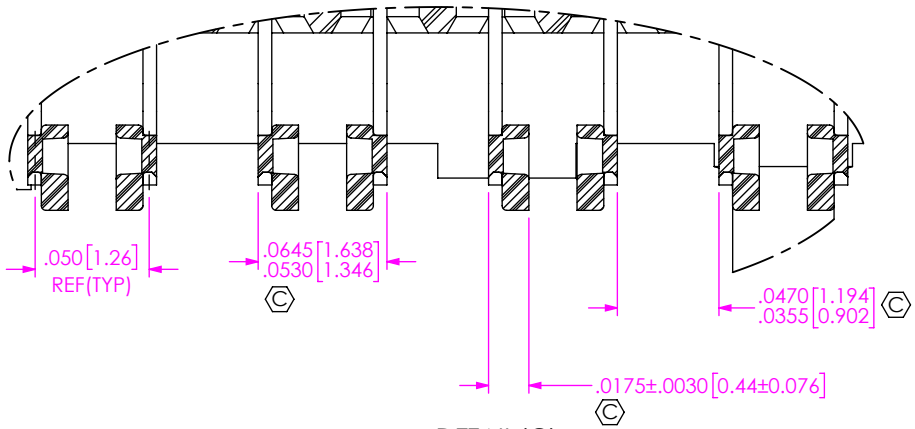

DETAIL 'C'
SCALE 12 : 1

* PROPRIETARY NOTE *

THIS DOCUMENT CONTAINS CONFIDENTIAL AND PROPRIETARY INFORMATION AND ALL DESIGN, MANUFACTURING, REPRODUCTION, USE, PATENT RIGHTS AND SALES RIGHTS ARE EXPRESSLY RESERVED BY SAMTEC, INC. THIS DOCUMENT SHALL NOT BE DISCLOSED, IN WHOLE OR PART, TO ANY UNAUTHORIZED PERSON OR ENTITY NOR REPRODUCED, TRANSFERRED OR INCORPORATED IN ANY OTHER PROJECT IN ANY MANNER WITHOUT THE EXPRESS WRITTEN CONSENT OF SAMTEC, INC.

DO NOT SCALE DRAWING

SHEET SCALE: 2:1

520 PARK EAST BLVD, NEW ALBANY, IN 47150
PHONE: 812-944-6733 FAX: 812-948-5047
e-Mail info@SAMTEC.com code 55322

DESCRIPTION:
14 ROW .050 PITCH SOCKET ARRAY ASM

DWG. NO.
ASP-208573-01

BY:J. BROWNING 10/16/2018 SHEET 2 OF 4

F:\dwg\misc\mktg\ASP-208573-01-MKT.SLDDRW

REVISION A

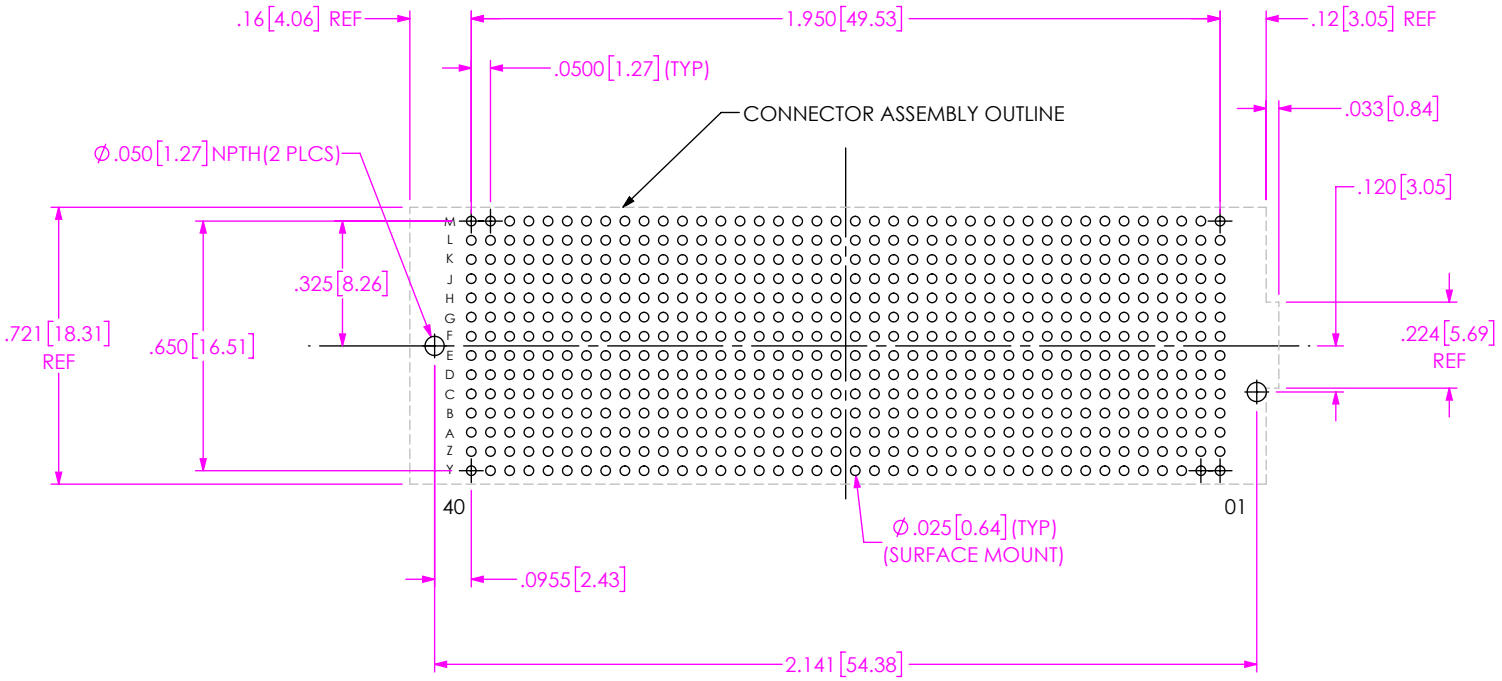

RECOMMENDED PCB LAYOUT

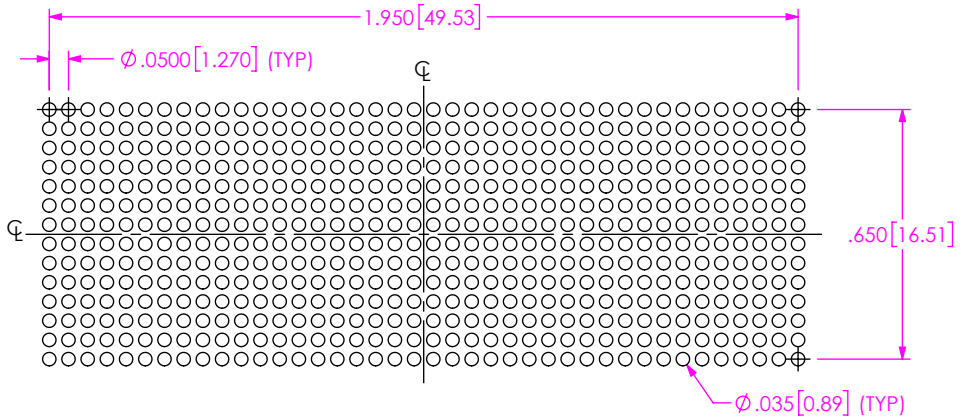

RECOMMENDED STENCIL LAYOUT
ALL DIMENSIONS ARE SYMMETRIC ABOUTH THE CENTERLINE
STENCIL TO BE .0060[0.157] THICK

F:\dwg\misc\mktg\ASP-208573-01-MKT.SLDDRW

* PROPRIETARY NOTE *

THIS DOCUMENT CONTAINS CONFIDENTIAL AND PROPRIETARY INFORMATION AND ALL DESIGN, MANUFACTURING, REPRODUCTION, USE, PATENT RIGHTS AND SALES RIGHTS ARE EXPRESSLY RESERVED BY SAMTEC, INC. THIS DOCUMENT SHALL NOT BE DISCLOSED, IN WHOLE OR PART, TO ANY UNAUTHORIZED PERSON OR ENTITY NOR REPRODUCED, TRANSFERRED OR INCORPORATED IN ANY OTHER PROJECT IN ANY MANNER WITHOUT THE EXPRESS WRITTEN CONSENT OF SAMTEC, INC.

DO NOT SCALE DRAWING

SHEET SCALE: 2:1

samtec
520 PARK EAST BLVD, NEW ALBANY, IN 47150
PHONE: 812-944-6733 FAX: 812-948-5047
e-Mail info@SAMTEC.com code 55322

DESCRIPTION:
14 ROW .050 PITCH SOCKET ARRAY ASM

DWG. NO.
ASP-208573-01

BY: J. BROWNING 10/16/2018 SHEET 3 OF 4

REVISION A

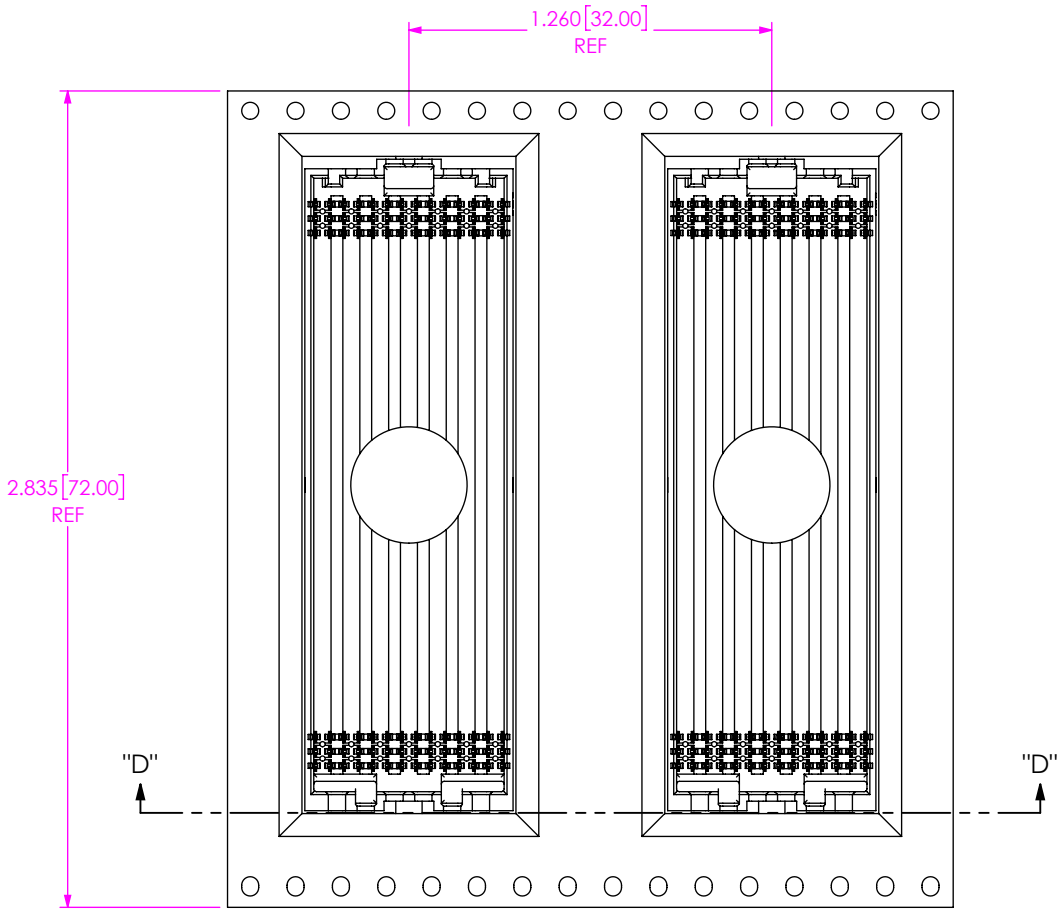

USER DIRECTION OF UN-REELING
POCKET NOT DETAILED

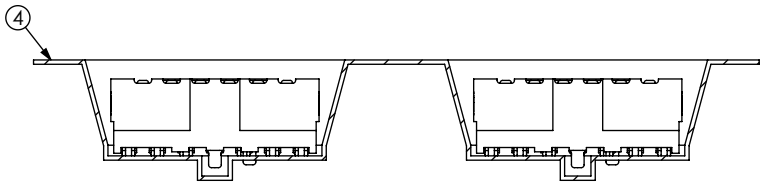

SECTION "D"-"D"

PACKAGING VIEW

* PROPRIETARY NOTE *
THIS DOCUMENT CONTAINS CONFIDENTIAL AND PROPRIETARY INFORMATION AND ALL DESIGN, MANUFACTURING, REPRODUCTION, USE, PATENT RIGHTS AND SALES RIGHTS ARE EXPRESSLY RESERVED BY SAMTEC, INC. THIS DOCUMENT SHALL NOT BE DISCLOSED, IN WHOLE OR PART, TO ANY UNAUTHORIZED PERSON OR ENTITY NOR REPRODUCED, TRANSFERRED OR INCORPORATED IN ANY OTHER PROJECT IN ANY MANNER WITHOUT THE EXPRESS WRITTEN CONSENT OF SAMTEC, INC.

520 PARK EAST BLVD, NEW ALBANY, IN 47150
PHONE: 812-944-6733 FAX: 812-948-5047
e-Mail info@SAMTEC.com code 55322

SHEET SCALE: 2:1

DESCRIPTION:
14 ROW .050 PITCH SOCKET ARRAY ASM

DWG. NO.
ASP-208573-01

BY: J. BROWNING 10/16/2018 SHEET 4 OF 4

F:\dwg\misc\mktg\ASP-208573-01-MKT.SLDDRW