CSRA

Adjustable AC Current Sensing Relay



- 1 to 30 Amps AC
- Large Diameter Thru Hole
- 10 Amp Contact
- Compact Design
- Terminal Block
- Time Delays
  - Inrush By-Pass
  - Nuisance Trip
- Over or UnderCurrent

c UL us
Listed
42L2

Operation

AC Current Sensing
The AC input voltage must be applied to the CSRA continuously during operation. The power up time delay is provided to allow for the inrush current of a motor and does not affect the CSRA's output contact during this time. The CSRA will remain in the de-energized state during the power up time delay. A nuisance trip delay is activated after the power up delay to avoid "nuisance" trips.

Overcurrent Mode (Auto Reset):
If the current through the CSRA is greater than the current set point adjustment for longer than the nuisance trip time delay, the relay will energize. The output relay will stay energized until the current drops below the current set point adjustment, at which time the output relay will become de-energized.

Undercurrent Mode (Auto Reset):
As long as the current remains greater than the set point, the relay will remain de-energized. When the current drops below the current set point adjustment for longer than the nuisance time delay, the output relay will become energized.

Specifications

Electrical

Input Supply Voltage:
24 or 115 VAC,±10%
Frequency: 50/60Hz.
Power Consumption: 6VA
Pick-Up Range:
1 to 5 Amps ±5%
4 to 20 Amps ±5%
6 to 30 Amps ±5%
Power Up Delay: 1 to 6 Sec., Adj.
Nuisance Delay: 0.2 to 20 Sec., Adj.
Drop-Out Range:
-3% of Set point amps, Typ.
Maximum Current:
1 to 5 Amp range:
300 Amps LRA, 15 Seconds max.
155 Amps FLA, Continuous
4 to 20 Amp range:
325 Amps LRA, 15 Seconds max.
180 Amps FLA, Continuous
6 to 30 Amp range:
355 Amps LRA, 15 Seconds max.
205 Amps FLA, Continuous

Reset: Automatic
Output Relay:
7 Amps, 120VAC @ 25°C
5 Amps, 240VAC @ 25°C
100,000 Full Load Electrical Cycles
10,000,000 Mechanical Cycles

Physical

Maximum Load Wire Diameter:
0.525"Dia.
Mounting: Surface or DIN Rail*
Termination:
Terminal block #12 AWG Max.
Packaging: Dust Cover
Weight: 18 Oz.

Ambient Temperatures

Operating: 0°C to 55°C
Storage: -10°C to 85°C
Note: Set Power Up and Nuisance Trip Delays to minimum during set-up.

Ordering Information

CSRA - 115A - 2 - 5 - AR

R-K Model

Input Voltages
24A - 24 VAC
115A - 115VAC

Adjustments
1 - Fixed (Specify Current)
2 - Adjustable

Pick-Up Current
5 - 1 to 5 Amps
20 - 4 to 20 Amps
30 - 6 to 30 Amps

Reset Options
AR - Automatic Reset
MR - Manual Reset

*** DIN Rail Bracket #DRB-4**

Dimensions

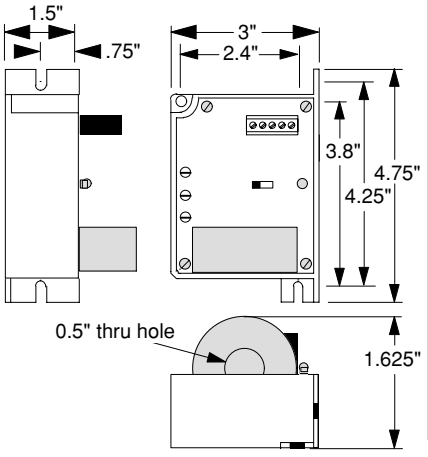

Connections

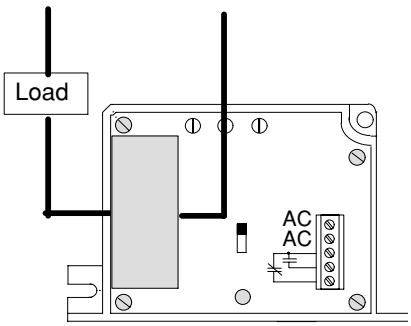

513.204.6060 or 800.543.4936 • www.rke.com